1973 TRUCK SHOP MANUAL

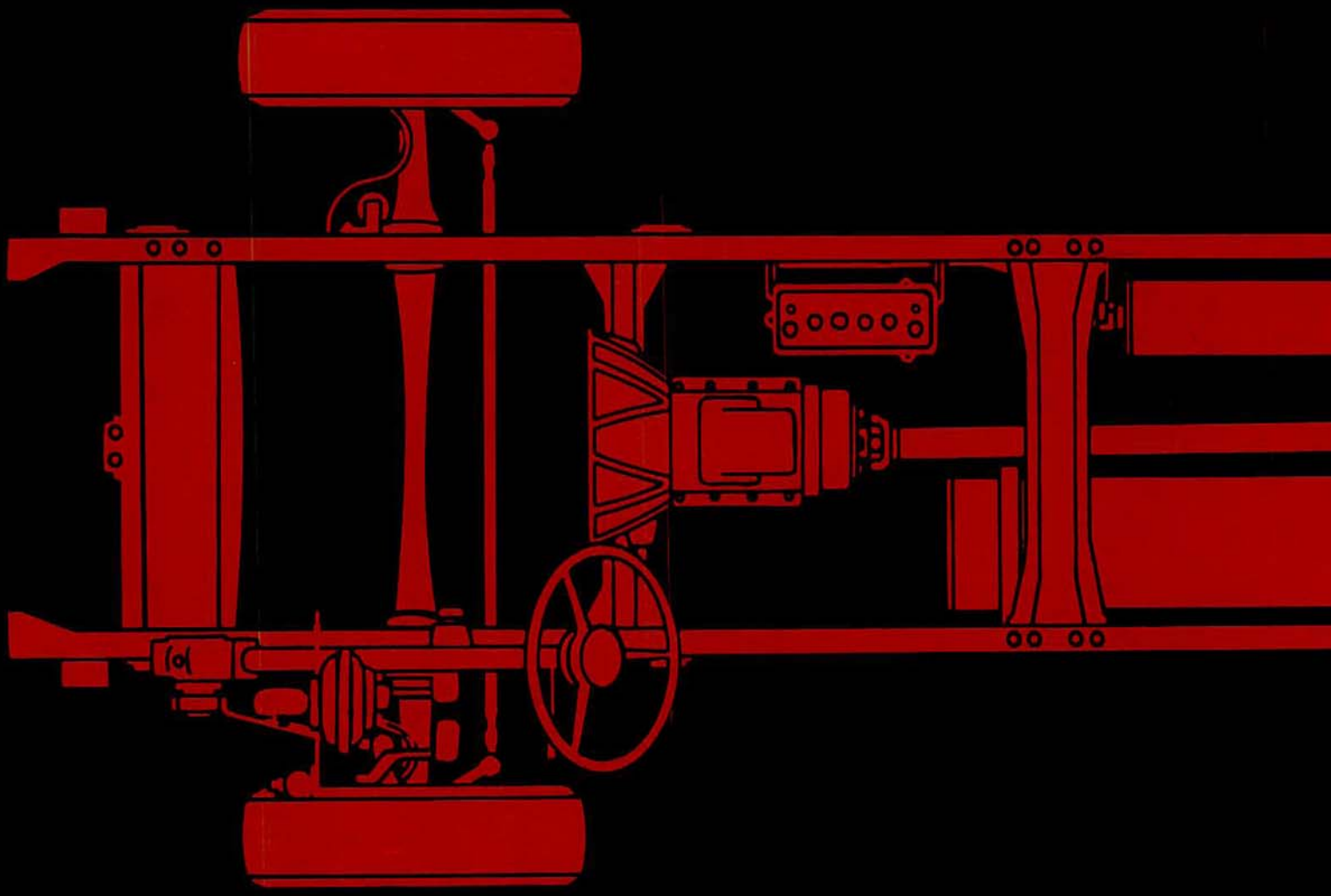

Complete 5 Volume Set

Volume 1 - Chassis
Volume 2 - Engine
Volume 3 & 4 - Body and Electrical
Volume 5 - Maintenance and Lubrication

OFFICIAL LICENSED PRODUCT
License #2011747

Copyright © 2012, Forel Publishing Company, LLC, Woodbridge, Virginia

All Rights Reserved. No part of this book may be used or reproduced in any manner whatsoever without written permission of Forel Publishing Company, LLC. For information write to Forel Publishing Company, LLC, 3999 Peregrine Ridge Ct., Woodbridge, VA 22192

1973 Ford Truck Shop Manual
EAN: 978-1-60371-081-7
ISBN: 1-60371-081-7

Forel Publishing Company, LLC
3999 Peregrine Ridge Ct.
Woodbridge, VA 22192
Email address: sales@ForelPublishing.com
Website: http://www.ForelPublishing.com



This publication contains material that is reproduced and distributed under a license from Ford Motor Company. No further reproduction or distribution of the Ford Motor Company material is allowed without the express written permission of Ford Motor Company.

Note from the Publisher

This product was created from the original Ford Motor Company's publication. Every effort has been made to use the original scanned images, however, due to the condition of the material; some pages have been modified to remove imperfections.

Disclaimer

Although every effort was made to ensure the accuracy of this book, no representations or warranties of any kind are made concerning the accuracy, completeness or suitability of the information, either expressed or implied. As a result, the information contained within this book should be used as general information only. The author and Forel Publishing Company, LLC shall have neither liability nor responsibility to any person or entity with respect to any loss or damage caused, or alleged to be caused, directly or indirectly by the information contained in this book. Further, the publisher and author are not engaged in rendering legal or other professional services. If legal, mechanical, electrical, or other expert assistance is required, the services of a competent professional should be sought.

Ford

1973 TRUCK SHOP MANUAL

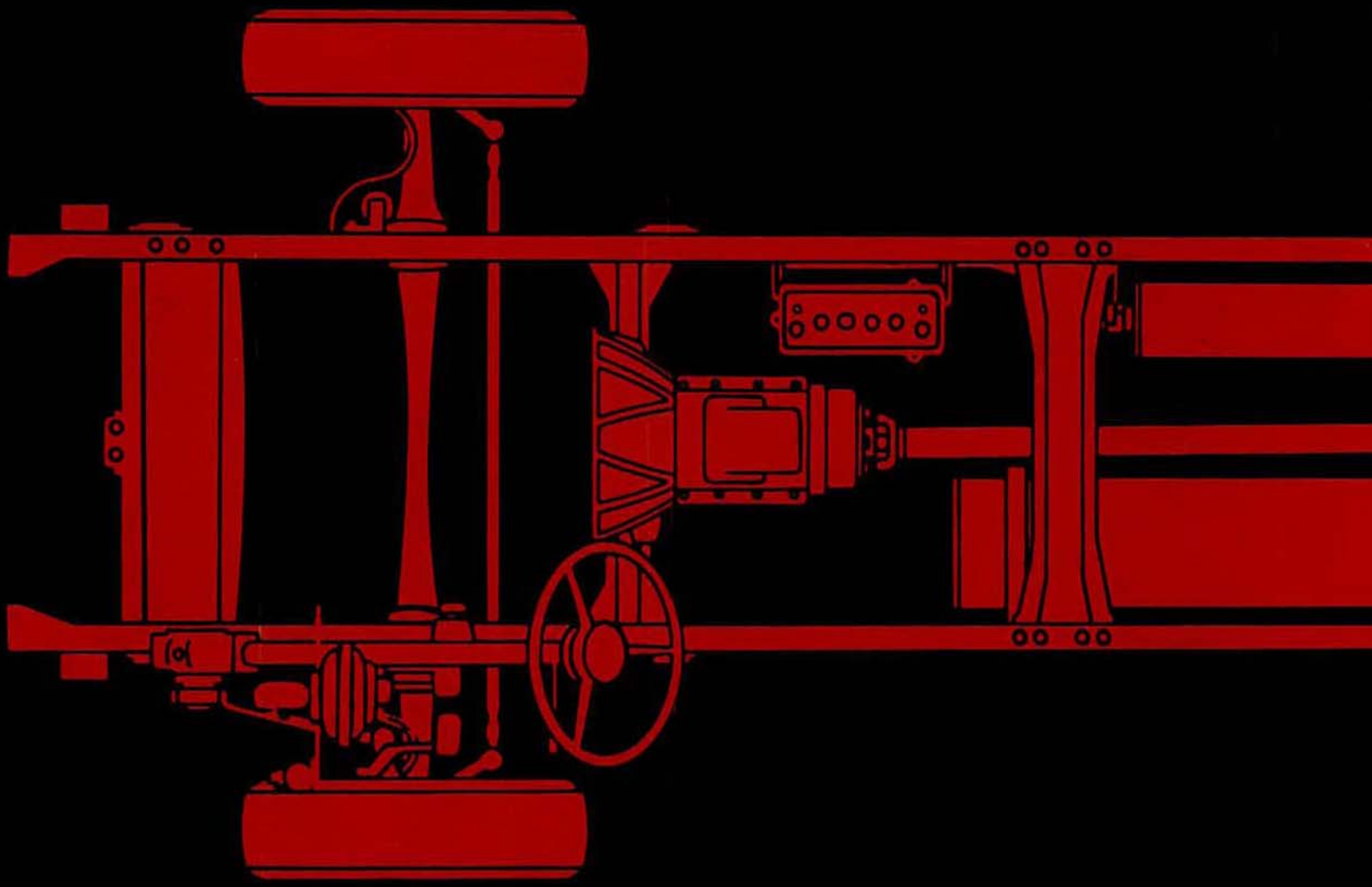

Volume 1

Chassis

OFFICIAL LICENSED PRODUCT
License #2011747

1973 TRUCK SHOP MANUAL

Volume I
Chassis

Group Index

	Identification Codes	**10**
	Wheels and Tires	**11**
	Brakes	**12**
	Steering	**13**
	Suspension	**14**
	Driving Axles and Drive Shafts	**15**
	Clutch and Manual Transmission	**16**
	Automatic Transmission	**17**
Vol. II	Vehicle Identification	20
	Gasoline Engines	21
	Diesel Engines	22
	Ignition System	23
	Fuel System—Gasoline	24
	Fuel System—Diesel	25
	Exhaust System	26
	Cooling System	27
	Starting System	28
Vol. III & IV	Identification Codes	30
	Charging System	31
	Lighting System	32
	Instruments, Clusters and Controls	33
	Main Wiring Harnesses and Circuit Protection	34
	Auxiliary Equipment	35
	Ventilating, Heating and Air Conditioning	36
	Seats	41
	Window Glass and Mechanisms	42
	Stationary Window Glass	43
	Doors, Hood & Tailgate	44
	Interior Trim	45
	Tops	46
	Body Shell, Exterior Trim, Frame & Underbody	47
Vol. V	Maintenance and Lubrication	50

Ford Marketing Corporation
Ford Customer Service Division
Service Technical Communications Department

First Printing—January, 1973

© Ford Marketing Corporation, Dearborn, Michigan

FOREWORD

This manual is divided into five volumes: 1 – Chassis, 2 – Engine, 3 – and 4 – Electrical and Body, 5 – Maintenance and Lubrication. These volumes should provide Service Technicians with complete information covering normal service repairs on all 1973 model trucks built by the Ford Companies in the U. S. and Canada. As changes in the product occur, this information will be updated by Technical Service Bulletins. When issued, T.S.B. information always supersedes the information in the manual.

Information in each volume is grouped by system or component plus "General Service" part which contains information common to several similar components.

The table of contents on the first page of each volume indicates the general content of the book and provides a handy tab locator to make it easy to find the first page of each "Group." That page will contain an index to "Parts" and the first page of each "Part" contains a detailed index which gives page location for each service operation covered. Page numbers are consecutive in each "Part."

To make reference easier, information has been broken down into smaller units so that essentially there is now one "Part" for each component or system. Group numbers indicate the volume in which the group may be found.

Example: 11 – 02 – 21

Volume 1 – Group 11 – Part 02 – Page 21

The descriptions and specifications in this manual were in effect at the time this manual was approved for printing. Ford Marketing Corporation reserves the right to discontinue models at any time, or change specifications or design, without notice and without incurring obligation.

Ford Service Publications

Identification Codes

GROUP 10

GENERAL INFORMATION

VEHICLE CERTIFICATION LABEL

The Vehicle Certification Label (V.C. Label) is attached to the rear face of the driver's door. The upper half of the label contains the name of the manufacturer, the month and year of manufacture and the certification statement. The V.C. Label also contains the Vehicle Identification Number.

The remaining information codes on the V.C. Label are the same as the Truck Rating Plate Codes (Fig. 1). Vehicle codes shown on the Truck Rating Plate are explained in the following paragraphs.

RATING PLATE

Figure 1 illustrates a typical Truck Rating Plate. On light and medium cowl and windshield vehicles, the Rating Plate is mounted on the right side of the cowl top panel under the hood. On stripped Parcel Delivery vehicles, the rating plate is placed in an envelope and included in the Boxed Items parts. On Bronco models, the plate is mounted on the inside panel of the glove compartment door. On all other vehicles, the Rating Plate is mounted on the rear face of the left front door.

VEHICLE IDENTIFICATION NUMBER

The identification number is the first line of numbers and letters appearing on the Rating Plate (Fig. 1). The first letter and two numbers indicate the truck model and series (the letter prefix identifies the type of body or cab and the numbers are the first two numbers of a truck series). The letter following the truck series code designates the engine identification code. The letter following the engine identification code indicates the assembly plant at which the vehicle was built. The remaining numbers indicate the consecutive unit number. The charts that follow list the various vehicle identification number codes.

VEHICLE DATA

The Vehicle Data appears on the Rating Plate on the two lines following the identification number. The first three digits under W.B. designate the wheelbase in inches. The one or two letters under COLOR identify the exterior paint color (two letters designate a two-tone). The letter and three digits under MODEL designate the truck model within a series. The letter and numerals under BODY designate the interior trim and body type (the letter identifies the interior trim scheme and the numerals identify the body or cab type). The transmission installed in the vehicle is identified under TRANS by either a numeric or alphabetical code (if two symbols appear, the first identifies the auxiliary transmission, if so equipped, and the second symbol identifies the main transmission). A letter and a number or two numbers under AXLE identify the rear axle ratio (when required, a letter is

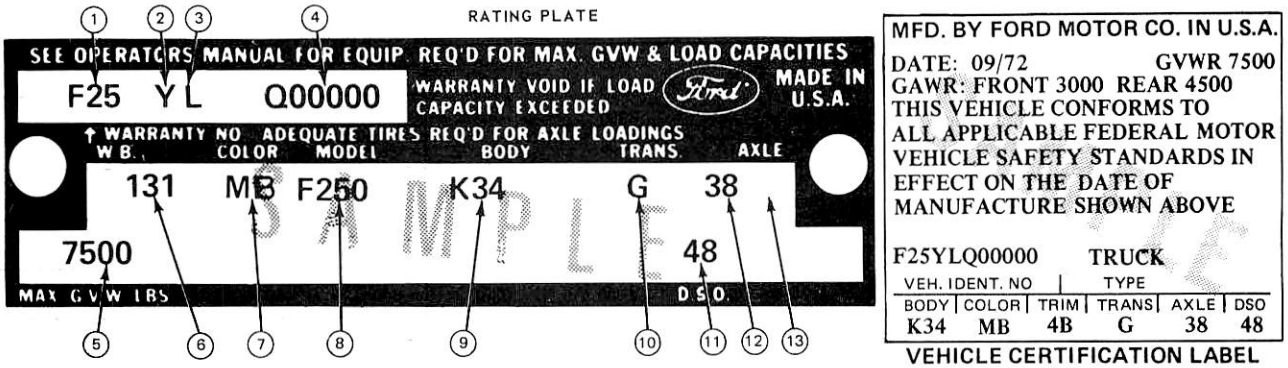

FIG. 1 Typical Truck Rating Plate and Vehicle Certification Label

also stamped behind the rear axle code to identify the front axle capacity). The maximum gross vehicle weight in pounds is stamped under MAX. G.V.W.

A two-digit number is stamped under D.S.O. to identify the district which ordered the vehicle. If the vehicle is built to special order (Domestic Special Order, Foreign Special Order, Limited Production Option, or other special order), the complete order number will also appear under D.S.O. The charts that follow list the various vehicle data codes.

W.B. (WHEELBASE)

The wheelbase in inches is entered in this space.

MAX. G.V.W. LBS

The maximum gross vehicle weight in pounds is recorded in this space.

D.S.O.

If vehicle is built on a **D.S.O., F.S.O., L.P.O.** (special orders) the complete order number will be reflected under the D.S.O. space including the District Code Number.

MODEL DESIGNATION (FIRST 3 CODE SYMBOLS – WARRANTY SERIAL NO. LINE)

U	Bronco	
	Basic Series	
U-14	U-100 (Pickup) 4 x 4	
U-15	U-100 (Wagon) 4 x 4	
E	Econoline	
	Basic Series	
	100 Series	
E-11	E-100 Club Wagon	
E-12	E-100 Custom Club Wagon	
E-13	E-100 Chateau Wagon	
E-14	E-100 Regular Van	
E-15	E-100 Window Van	
E-16	E-100 Display Van	
	200 Series	
E-21	E-200 Club Wagon	
E-22	E-200 Custom Club Wagon	
E-23	E-200 Chateau Wagon	
E-24	E-200 Regular Van	
E-25	E-200 Window Van	
E-26	E-200 Display Van	
	Bus Models	
E-27	E-200 Standard	
E-28	E-200 Custom	
E-29	E-200 Chateau	
E-30	Camper	
	300 Series	
E-31	E-300 Club Wagon	
E-32	E-300 Custom Club Wagon	
E-33	E-300 Chateau Wagon	
E-34	E-300 Regular Van	
E-35	E-300 Window Van	
E-36	E-300 Display Van	
	Bus Models	
E-37	E-300 Standard	
E-38	E-300 Custom	
E-39	Chateau	
V-80	LTS 800	(Gas)
V-90	LTS 900	

F		Conventional	(Gas)
K		Conventional	(Diesel)
	Chassis		
Pick-up	Cab	Basic Series	
F-10	F-17	F-100	
F-11	F-18	F-100 4 x 4	
F-25	F-27	F-250	
F-26	F-28	F-250 4-x 4	
F-35	F-37	F-350	
F-50		F-500	
F-60		F-600	
F-61		F-600	
F-65, F-66		F-600 4 x 4	
K-60		F-6000	(Diesel)
K-61		F-6000	(Diesel)
K-70		F-7000	(Diesel)
B		Bus	(Gas)
J		Bus	(Diesel)
B-50		B-500	
B-60		B-600	
B-61		B-600	
B-70		B-700	
B-75		B-750	
J-70		B-7000	(Diesel)
P		Parcel	(Gas)
G		Parcel	(Diesel)
P-35		P-350	
P-40		P-400	
P-50		P-500	
P-60		P-600	(DSO)
G-50		P-5000 (DSO)	(Diesel)
		Motor Home	(Gas)
M-35		M-350	(DSO)
M-40		M-400	(DSO)
M-50		M-500	(DSO)
Y-80		LTS 8000	(Diesel)
Y-90		LTS 9000	

F-70	F-700	
F-75	F-750	
F-80	L-800	
F-81	L-800	
F-90	L-900	
K-80	L-8000	(Diesel)
K-81	L-8000	
K-90	L-9000	
N-60	LN-600	
N-61	LN-600	
N-70	LN-700	(Gas)
N-75	LN-750	
N-80	LN-800	
N-90	LN-900	
R-60	LN-6000	
R-61	LN-6000	
R-70	LN-7000	(Diesel)
R-80	LN-8000	
R-81	LN-8000	
R-90	LN-9000	
S-80	LNT-800	
S-90	LNT-900	(Gas)
W-90	LNT-8000	
W-90	LNT-9000	(Diesel)
C-60	C-600	
C-61	C-600	
C-70	C-700	(Gas)
C-75, C-76	C-750	
C-80	C-800	
C-90	C-900	
D-60	C-6000	
D-70	C-7000	(Diesel)
D-80	C-8000	
T-80	LT-800	
T-90	LT-900	(Gas)
U-80	LT-8000	
U-90	LT-9000	(Diesel)
L-80	CT-800	
L-90	CT-900	(Gas)
Q-80	CT-8000	(Diesel)
Z-90	W-9000	
X-90	WT-9000	(Diesel)

ENGINE CODES BRONCO-ECONO-CLUB WAGONS-PARCEL-SCHOOL BUS-LT & MED TRUCKS

Code		CID Engine	Cyl.
	Gas (Bronco)		
T		200-1V	6
G		302-2V	8
	Gas (Econoline)		
A		240-1V	6
G		302-2V	8
	Gas (F100-250-350)		
A		240-1V	6
B		300-1V	6
G		302-2V	8
Y		360-2V	8
H		390-2V	8
	Gas		
B		300-1V	6
B	(600 Series)	300-1V H.D.	6
C		330-2V	8
D		330-2V H.D.	8
E		361-2V	8
	Diesel		
U		522 (V 150)	8
W		380	6
	Gas (Parcel Delivery)		
A		240-1V	6
B		300-1V	6
	Diesel (Detroit)		
K		353N	3 (DSO)
	Gas (Low Compression Export)		
1		240-1V	6
2		300-1V H.D.	6
3		302-2V	8
4		330-2V H.D.	8
8		360-2V	8
5		361-2V	8

Heavy and Extra Heavy Truck-Series 700 through 9000
LN 500-9000 and C-500-900

Code	Cylinders	Engine C.I.D.	
A	6	240-1V	
B	6	300-1V	
C	8	330-2V M.D.	
D	8	330-2V H.D.	Gas

Heavy and Extra Heavy Truck-Series 700 Through 9000
LN-500-9000 and C-500-900

Code	Cylinders	Engine C.I.D.	
E	8	361-2V	
F	8	391-4V	
H	8	401-4V	
K	8	477-4V	Gas
L	8	534-4V	
U	8	330-2V H.D.	Liquid Propane Gas (DSO)
W	8	361-2V	
9	8	534-4V	
X	8	391-4V	
1	6	240-1V	Gas Low Compression
3	8	330-2V M.D.	
4	8	330-2V H.D.	
5	8	361-2V	
B		903 Cummins-V903	
C		636 Caterpillar-V8-225	
D		855 Cummins NTC-270	
E		903 Cummins-V903-270	
F		855 Cummins-NHCT-270	
G		903 Cummins V903-290	
J		855 Cummins-NHC-250	
K		855 Cummins-NHCT-270	
L		855 Cummins-NHCT-270	
M		855 Cummins-NTC-260	
N		855 Cummins NTC-280	
P		855 Cummins-NTC-300	
Q		855 Cummins-NTC-320	
R		855 Cummins-NTC-335	Diesel
T		568 Detroit 8V-71N	
U		522 Caterpillar V8-150	
V		522 Caterpillar V8-175	
W		855 Cummins-NTC-290	
X		927 Cummins-N927	
Y		927 Cummins-N927	
Z		927 Cummins-N927	
1		855 Cummins-NH-230	
2		426 Detroit 6-71N	
3		638 Caterpillar 1674	
4		573 Caterpillar-V8-200	
5		855 Cummins NHCT-270	
6		568 Detroit 8V-71N	
7		568 Detroit 8V-71NE	
8		318 Detroit 6V-53N	
9		555 Cummins V-8	
0		855 Cummins NTC-350	

CONSECUTIVE UNIT SERIAL NUMBERS

1972 CALENDAR YEAR PRODUCTION

Month	Through 600 Series	Heavy-Extra Heavy Series
August	Q00,000–Q09,999	Q10,000–Q19,999
September	Q20,000–Q29,999	Q30,000–Q39,999
October	Q40,000–Q49,999	Q50,000–Q59,999
November	Q60,000–Q69,999	Q70,000–Q79,999
December	Q80,000–Q89,999	Q90,000–Q99,999

1973 CALENDAR YEAR PRODUCTION

Month	Through 600 Series	Heavy-Extra Heavy Series
January	R00,000–R09,999	R10,000–R19,999
February	R20,000–R29,999	R30,000–R39,999
March	R40,000–R49,999	R50,000–R59,999
April	R60,000–R69,999	R70,000–R79,999
May	R80,000–R89,999	R90,999–R99,999
June	S00,000–S09,999	S10,000–S19,999
July	S20,000–S29,999	S30,000–S39,999

ASSEMBLY PLANTS CODE LETTERS

Code	Assembly Plant
C	Ontario Truck
E	Mahwah
I	Highland Park
K	Kansas City
L	Michigan Truck

ASSEMBLY PLANTS CODE LETTERS

Code	Assembly Plant
N	Norfolk
P	Twin Cities
R	San Jose
S	Allen Park
V	Kentucky Truck

AUXILIARY TRANSMISSION CODE

CODE	DESCRIPTION	CODE	DESCRIPTION
2	Spicer 5831D	5	Spicer 8341C
3	Spicer 7231B	6	Spicer 8031C
4	Spicer 7231D	8	Spicer 7041

Heavy and Extra Heavy Truck – Series 700 through 9000
LN500-9000 and C-500-900

EXTERIOR PAINT COLOR CODES

Code	Color	M-30J/M-32J Spec. No.
A	Black	1724-A
B	Lt. Blue	3429-A
C	Spec. White	1525-A
D	Lt. Yellow	3439-A
E	Med. Blue Met.	5087-HS
F	Lt. Green	5058-A
G	Chrome Yellow	1526-A
H	Med. Beige	3569-A
H	Med. Green Met.	5187-HS
J	Rangoon Red	1515-A
K	Med. Ivy Green	3150-A
L	Dk. Green	1237-A
M	White	1619-A
N	Platinum	921-A
P	Med. Green Met.	3462-HS
Q	Lt. Green	5060-A
R	Lt. Aqua	3066-A
R	Ginger Met.	5186-HS
S	Brt. Dk. Blue Met.	5094-HS
T	Red	2008-A
U	Med. Lime Met.	5021-HS
V	Dk. Green	5005-A
W	Lt. Ginger Met.	3516-HS
X	Lt. Goldenrod	3565-A
Z	Lt. Copper Met.	5035-HS
2	Maroon	3059-A
4	Brt. Lime	5027-A
6	Brt. Med. Blue	5004-A
7	Med. Blue	2098-A
8	Yellow	3341-A
9	Prime Red	M6J102-B
	Prime Gray	M6J103-B

CLUB WAGON INTERIOR TRIM CODES

13, 14, 15	Lt. Gray/Black Vinyl
23, 24, 25	Lt. Blue/Med. Blue Vinyl or Cloth and Vinyl
33, 34, 35	Lt. Ginger/Med. Ginger Vinyl or Cloth and Vinyl
43, 44, 45	Lt. Green/Med. Green Vinyl or Cloth and Vinyl

ECONOLINE INTERIOR TRIM CODES

1, 11, 12	Lt. Gray/Black Vinyl
2, 21, 22	Lt. Blue/Med. Blue Vinyl
3, 31, 32	Lt. Ginger/Med. Ginger Vinyl
4, 41, 42	Lt. Green/Med. Green Vinyl
26, 27, 28	Lt. Blue/Med. Blue Vinyl
36, 37, 38	Lt. Ginger/Med. Ginger Vinyl
46, 47, 48	Lt. Green/Med. Green Vinyl
B, B1	Lt. Blue/Med. Blue Vinyl
C, C1, C2	Lt. Ginger/Med. Ginger Vinyl
D, D1, D3	Lt. Green/Med. Green Vinyl

LIGHT AND MEDIUM TRUCK TRIM CODES

4, 4B, 43, DB, M3, MB	Black Vinyl
D, M	Black Cloth and Vinyl
2, 23, B, K3	Lt. Blue/Med. Blue Vinyl
23	Med. Blue Cloth and Vinyl
KB, SB, 2B, 2C, BB	Black with Blue Vinyl
5, 53, E, N3	Red/Dk. Red Vinyl
N, V	Dk. Red Cloth and Vinyl
5B, 5C, EB, NB, VB	Black with Red Vinyl
6, 63, F, 03	Lt. Green/Med. Green Vinyl
O, W	Med. Green Cloth and Vinyl
6B, 6C, FB, OB, WB	Black with Green Vinyl
3, 33, C, L3	Pastel Ginger Vinyl
L, T	Light and Pastel Ginger Cloth and Vinyl
3B, 3C, CB, LB, TB	Black with Ginger Vinyl

BRONCO INTERIOR TRIM CODES

3, 34	Pastel Parchment Vinyl

HEAVY TRUCK TRIM CODES

4, D, D3, DC, 43, 4C, 4A, 4B, 41, 42, D2, DB, 46, D6, 4F, DF	Black Vinyl
B2	Lt. and Med. Blue Vinyl
E2	Red and Dk. Red Vinyl
F2	Lt. Green/Med. Green Vinyl
C2	Pastel Ginger Vinyl
BB	Black with Blue Vinyl
EB	Black with Red Vinyl
FB	Black with Green Vinyl
CB	Black with Ginger Vinyl
11	Med. Gray Vinyl
11	Lt. Gray Vinyl
12, A2	Lt. and Med. Gray Vinyl
13, 1C, A3, AC, 14, 1D, A4, AD, 15, 1E, A5, AE	Med. Gray Vinyl
A2	Gray Multicolor and Lt. Gray Vinyl
G4, G5, G7, GD, GE, GG	Ginger (Saddle) Vinyl

RATING PLATE "BODY" TYPE CODE
ECONOLINE-VANS & CLUB WAGONS

CUSTOM	STANDARD	CAB/TRIM
A	1	GRAY/BLACK
B	2	BLUE
C	3	GINGER
D	4	GREEN

VAN SEATS
1 STATIONARY PASSENGER
2 FLIP PASSENGER
6 DELUXE DRIVER
7 DELUXE DRIVER & DELUXE STATIONARY PASSENGER
8 DELUXE DRIVER & FLIP PASSENGER

WAGON SEATS
3 FIRST & SECOND ROW - 5 PASSENGER
4 FIRST, SECOND & THIRD ROW - 8 PASSENGER
5 FIRST, SECOND, THIRD & FOURTH ROW - 12 PASSENGER

LIGHT & MEDIUM TRUCK – 100 Thru 6000 and Bronco

CUSTOM	RANGER	RANGER XLT	STD.	COLOR CAB/TRIM
	B	K	2	BLUE
	C	L	3	GINGER
	D	M	4	BLACK
	E	N	5	RED
	F	W	6	GREEN
	G	P	–	AVOCADO

H.D. VINYL	BRONCO REAR SEAT	STD.	SEATS
B	–	2	BENCH SEAT
C	–	3	FOAM CUSHION
–	4		BRONCO REAR SEAT

BODY TYPE	
0	PARCEL
3	FLARESIDE PICK-UP
4	STYLESIDE PICK-UP
5	PLATFORM STAKE
7	COWL
8	CHASSIS CAB
9	PLATFORM

Seat Codes – Medium and Heavy Truck				
HD Black Vinyl	Driver w/Companion	Single Driver	Full Width	Description
A	–	–	1	Bench Seat
B	–	–	2	Custom Bench Seat
–	C	3	–	L-S Unison
–	D	4	–	L-S No. 675
–	E	5	–	Bostrom Westcoaster
–	F	6	–	Bostrom T-Bar
–	G ①	7	–	National Cush-N-Aire
–	H	8	–	Bostrom Level Air

① w/Lear Siegler companion seat.

FRONT AXLE CODES
LIGHT AND MEDIUM TRUCKS

CODE Manual	CODE Power		
	A	3,800	
	B	4,700	
–	J	5,000	Ford
2	K	5,500	
3	L	6,000	
4	M	7,000	
7	P	3,500	DANA 6CF HD
8	Q	3,000	DANA 44 LOCK

Medium & Heavy Trucks (Except F-B-500-600, 6000)					
CODE Manual	CODE Power	Description	CODE Manual	CODE Power	Description
1	J	5000 lb.	7	P	12,000 lb.
2	K	5500 lb.	8	–	12,000 lb. Steer-Ease
3	L	6000 lb.	9	R	15,000 lb.
4	M	7000 lb.	–	S	16,000 lb.
5	N	9000 lb.	–	T	18,000 lb.
6	–	12,000 lb Center Point	–	U	20,000 lb.
			–	Z	DSO Front Axle

DISTRICE CODES

11	BOSTON	42	CLEVELAND	72	SAN JOSE
12	BUFFALO	43	MILWAUKEE	73	SALT LAKE CITY
13	NEW YORK	46	INDIANAPOLIS	74	SEATTLE
14	PITTSBURGH	47	CINCINNATI	75	PHOENIX
15	NEWARK	48	DETROIT	76	DENVER
16	PHILADELPHIA	52	DALLAS	83	GOVERNMENT
17	WASHINGTON	53	KANSAS CITY	84	HOME OFFICE RESERVE
21	ATLANTA	54	OMAHA	85	AMERICAN RED CROSS
22	CHARLOTTE	55	ST. LOUIS	89	TRANSPORTATION SERVICES
23	MEMPHIS	56	DAVENPORT	87	BODY COMPANY
24	JACKSONVILLE	57	HOUSTON	90's	EXPORT
28	LOUISVILLE	58	TWIN CITIES		
41	CHICAGO	71	LOS ANGELES		

FORD OF CANADA

MERCURY REGIONS		FORD REGIONS	
A1	CENTRAL	B1	CENTRAL
A2	EASTERN	B2	EASTERN
A3	ATLANTIC	B3	ATLANTIC
A4	MIDWESTERN	B4	MIDWESTERN
A6	WESTERN	B6	WESTERN
A7	PACIFIC	B7	PACIFIC
12	EXPORT	12	EXPORT

NOTE: EXPORT ALPHABETICAL 1

REAR AXLE CODE (2780-lb. to 7400-lb. Capacity)

Code	Description	Ratio	Code	Description	Ratio	Code	Description	Ratio
A2	Ford 3300 Ⓛ	3.70	04	Ford 2780	4.57	24	Dana 60 (5300)	4.10
A3	Ford 2780 Ⓛ	4.11	05	Ford 3300	4.11	25	Dana 60 (5300)	4.56
A5	Ford 3300 Ⓛ	4.11	08	Ford 3300	3.50	27	Dana 70 (7400)	4.10
B4	Dana 60 Ⓛ (5200)	4.10	09	Ford 3300	3.70	28	Dana 70 (7400)	4.56
B8	Ford 2780 Ⓛ	3.50	10	Ford 3050	3.25	71	Dana 60 (5050)	3.54
B9	Ford 3300 Ⓛ	3.50	11	Ford 3050	3.50	72	Dana 60 (5050)	3.73
C7	Dana 60 Ⓛ (5300)	3.54	12	Ford 3050	3.70	73	Dana 60 (5050)	4.10
C8	Dana 60 Ⓛ (5300)	3.73	02	Ford 3300	3.00	36	Dana 70 (7400)	3.73
D7	Dana 70 Ⓛ (7400)	4.10	17	Ford 3300	3.25	37	Dana 60 (5300)	3.54
H2	Ford 3600 Ⓛ	3.50	18	Ford 2780	3.50	38	Dana 60 (5300)	3.73
H3	Ford 3600 Ⓛ	4.09	22	Dana 70 (7400)	4.88	G1	Dana 60 Ⓛ (5050)	3.54
03	Ford 2780	4.11	23	Dana 70 (7400)	5.13	G3	Dana 60 Ⓛ (5050)	4.10

Ⓛ Limited-Slip or Traction-Lok

REAR AXLE CODE (11,000-lb to 18,500-lb. Capacity)

Code	Description	Capacity	Ratio	Code	Description	Capacity	Ratio	Code	Description	Capacity	Ratio
E1	Eaton 16244	(17,500)	5.57/7.75	FQ	Eaton 17121	(18,500)	6.14	42	Rockwell D-100	(13,000)	6.20
E2	Eaton 16244	(17,500)	6.17/8.58	GQ	Eaton 17121	(18,500)	6.50	44	Rockwell D-100	(13,000)	6.80
E3	Eaton 16244	(17,500)	6.50/9.04	HQ	Eaton 17121	(18,500)	7.17	52	Rockwell H-170	(17,500)	5.86
F1	Eaton 15201	(15,000)	5.14/7.17	JQ	Eaton 17121	(18,500)	7.60	53	Rockwell H-170	(17,500)	6.14
F2	Eaton 15201	(15,000)	5.83/8.12	32	Rockwell C-100		6.20	54	Rockwell H-170	(17,500)	6.83
F3	Eaton 15201	(15,000)	6.33/8.81	34	Rockwell C-100		6.80	55	Rockwell H-170	(17,500)	7.17
EH	Eaton 17221	(18,500)	5.57/7.60	31	Rockwell C-100		5.83	62	Rockwell F-106	(15,000)	6.20
FH	Eaton 17221	(18,500)	6.14/8.38	40	Rockwell D-100		5.29	64	Rockwell F-106	(15,000)	6.80
GH	Eaton 17221	(18,500)	6.50/8.87	41	Rockwell D-100	(13,000)	5.83	66	Rockwell F-106	(15,000)	7.20
HH	Eaton 17221	(18,500)	7.17/9.77								

REAR AXLE CODE (22,000-lb and 23,000-lb. Single-Axle)

Code	Description	Capacity	Ratio	Code	Description	Capacity	Ratio	Code	Description	Capacity	Ratio
DB	Eaton 18221	(22,000)	5.57/7.60	HG	Eaton 19121	(23,000)	4.56	H3	Rockwell R-171	(23,000)	4.63
EB	Eaton 18221	(22,000)	6.14/8.38	DK	Eaton 18121	(22,000)	6.50	H4	Rockwell R-171	(23,000)	4.88
FB	Eaton 18221	(22,000)	6.50/8.87	EK	Eaton 18121	(22,000)	7.17	H5	Rockwell R-171	(23,000)	5.29
GB	Eaton 18221	(22,000)	7.17/9.77	AP	Eaton 19221	(23,000)	4.33/5.90	H6	Rockwell R-171	(23,000)	5.86
AG	Eaton 19121	(23,000)	4.11	CP	Eaton 19221	(23,000)	5.43/7.39	H7	Rockwell R-171	(23,000)	6.14
BG	Eaton 19121	(23,000)	4.33	DP	Eaton 19221	(23,000)	6.17/8.40	H9	Rockwell R-171	(23,000)	3.70
CG	Eaton 19121	(23,000)	4.88	EP	Eaton 19221	(23,000)	6.67/9.08	1A	Rockwell R-170	(23,000)	6.42/8.38
DG	Eaton 19121	(23,000)	5.43	GP	Eaton 19221	(23,000)	4.11/5.60	2A	Rockwell R-170	(23,000)	7.09/9.07
EG	Eaton 19121	(23,000)	6.17	H1	Rockwell R-171	(23,000)	4.11	3A	Rockwell R-170	(23,000)	7.21
FG	Eaton 19121	(23,000)	6.67	H2	Rockwell R-171	(23,000)	4.33	4A	Rockwell R-170	(23,000)	4.11

TANDEM REAR AXLE CODES

Code	Description	Capacity	Ratio	Code	Description	Capacity	Ratio	Code	Description	Capacity	Ratio
EC	Eaton 30DSC	(32,000)	6.50	GF	Eaton 34DSE	(34,000)	6.14	HW	Eaton 34DET	(34,000)	7.17/9.77
FC	Eaton 30DSC	(32,000)	7.17	HF	Eaton 34DSE	(34,000)	6.50				
GC	Eaton 30DSC	(32,000)	7.60	MF	Eaton 34DSE	(34,000)	7.17				
JF	Eaton 34DSC	(34,000)	4.11	KF	Eaton 34DSE	(34,000)	7.60				
BF	Eaton 34DSC	(34,000)	4.33	LF	Eaton 34DSE	(34,000)	3.70				
CF	Eaton 34DSC	(34,000)	4.56	FW	Eaton 34DTE	(34,000)	6.14/8.38				
DF	Eaton 34DSC	(34,000)	4.88	GW	Eaton 34DTE	(34,000)	6.50/8.87				

TRANSMISSION CODES

Code	Description
Bronco	
C	3 Speed Manual
Econoline–Club Wagon	
C	3 Speed Manual
G	Automatic (C4)
Light, Medium and Heavy Truck, Parcel Delivery and School Bus	
A	New Process 435 4 Speed
B	Spicer 8516
B	Spicer P8516 Overdrive
C	Ford-Manual 3 Speed
C	Fuller RT-610 10 Speed
D	Clark 387 V 5 Speed
E	Warner T-19G
E	Fuller 5 H74 5 Speed
F	Fuller 5HA74 5 Speed
F	Warner T-18 4 Speed
G	C-4 Automatic
G	Warner T-87G
H	Allison MT650
J	Fuller RTO 9513
J	FMX Automatic (Parcel)
K	Spicer 6453A 5 Speed
L	Allison AT540
M	Clark 285V 5 Speed
N	Spicer 6352 5 Speed
Ø	New Process 542FL 5 Speed

Code	Description
Light, Medium and Heavy Truck, Parcel Delivery and School Bus (Cont'd.)	
Ø	Fuller T-905B 5 Speed
P	Warner T-19 4 Speed
P	C-6 Automatic
Q	Spicer 5652 5 Speed
R	Spicer 8716
S	Spicer 5756-B 5 Speed
T	New Process 542 FO 5 Speed
T	Fuller TRO-9509 B 9 Speed
U	Spicer 6852G 5 Speed
V	Fuller RT-910
W	Spicer 6352B 5 Speed
X	Fuller T-905A 5 Speed
Y	Transmatic MT41-6 Speed
Z	Transmatic MT40-6 Speed
1	Spicer 8552A 5 Speed
1	Transmatic MT42-6 Speed
2	Clark 282V 5 Speed
3	Fuller RT-906
4	Clark 280 VO 5 Speed
5	Fuller RTO-910
6	Fuller RTO-915
7	Clark 385V 5 Speed
8	Allison MT640
9	Fuller RT-915
9	New Process 542 FD 5 Speed

CW1172-C

Wheels and Tires

GROUP 11

PART 11-01	Page
General Wheel and Tire Service	11-01-01
PART 11-02	
Wheels and Tires–Drop Center Rim	11-02-01
PART 11-03	
Wheels and Tires–Two-Piece Rims	11-03-01
PART 11-04	
Wheels and Tires–Three-Piece Rims	11-04-01

PART 11-10	Page
Wheel Hubs and Bearings–Front	11-10-01
PART 11-11	
Wheel Hubs and Bearings–Rear	11-11-01
PART 11-12	
Wheel Hubs and Bearings–Front Wheel Drive	11-12-01
PART 11-14	
Wheel Hubs and Bearings–Rear (Full Floating Axle)	11-14-01

PART 11-01 General Wheel and Tire Service

Applies to All Models

COMPONENT INDEX	Page	COMPONENT INDEX	Page
FRONT WHEEL BEARING Maintenance	01-03	TIRE INSPECTION	01-03
		WHEEL INSPECTION	01-03

CF1801-C

SAFETY

SAFETY PRECAUTIONS WHEN SERVICING TRUCK TIRES

CAUTION AND SAFETY FIRST are bywords when handling tires, **particularly truck tires!** Careful attention to the suggestions that follow may prevent crippling injuries, or even death. **Make it a rule to respect the terrific force contained in an inflated tire.** You may be glad some day that you did.

Prepare for any tire repair operation in a safe and efficient way. In changing tires on drop center wheels, remove the wheel and tire from the truck. Greater safety, ease and a quicker job can be done than with making the tire change with the wheel on the truck. In servicing of **all tires** use caution not to drop them (or the wheels or assemblies) on the feet, hands or body, or heavily on the floor (Fig. 1). Practice good methods of lifting; use your legs as well as your arms and your body. This can help to prevent painful, internal injury. When carrying tires or wheels don't step in any oil. **Keep the floor clean and dry.**

Deflating a tire properly is very important to your safety. First reduce the pressure **as much as you possibly can** by pushing the valve core plunger. **Only then should you remove the valve core.** Keep your eyes away from the valve! Figure 2 shows the safe way to do it.

Demounting tires from wheels or rims requires special care. Tires on drop center rims are best handled on a wheel holder, or tire changing machine (Fig. 3).

This will prevent cuts on hands and wrists and will make it unnecessary to use a mallet for seating the tire.

Use only standard tire mounting tools and equipment. The use of makeshift tools, screwdrivers or pliers to force tires on or off rims or wheels is **dangerous.**


F1857-A

FIG. 1 Handling Wheels and Tires

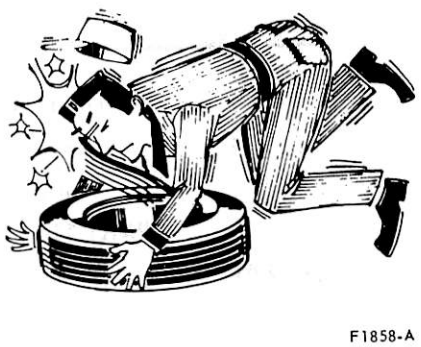
F1858-A

FIG. 4 Use of Tire Irons


F1859-A

FIG. 7 Seating of Rings


F1853-A

FIG. 2 Safe Air Removal

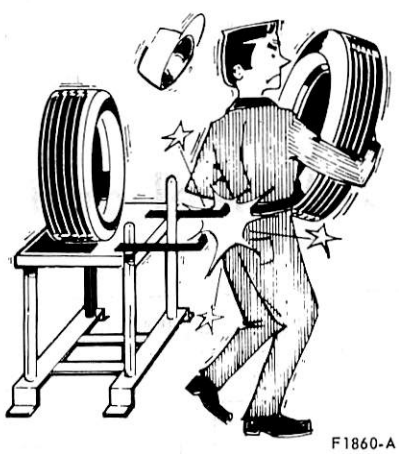
F1860-A

FIG. 5 Tire Spreader



F1855-A

FIG. 8 Inflation Details

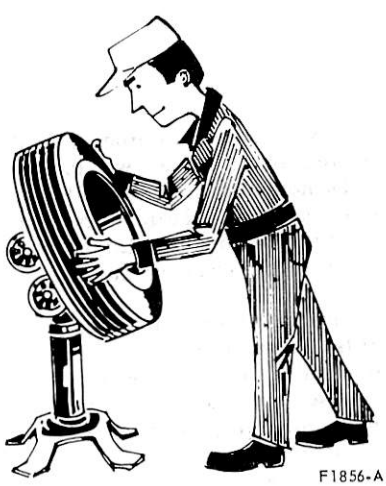
F1856-A

FIG. 3 Changing Tire on Drop Center Rim

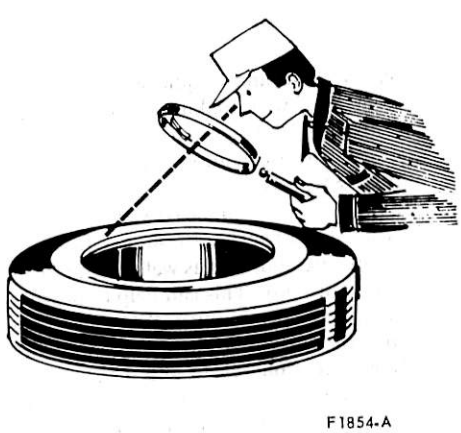
F1854-A

FIG. 6 Visual Inspection

A new Rotunda tire changer is available. Details include a bead seater/inflator using an automatically adjustable inflation ring. This feature aids in properly seating the bead for inflation. To properly operate the new Rotunda tire changer follow the instructions provided.

As with the drop center rims be certain on split rim assemblies that all air is out before unlocking a rim or ring. Use special care when using tire irons. Grip them firmly and keep them free of oil and grease. They can slip and fly with tremendous force (Fig. 4).

A careful inspection should be made of the tire and all necessary repairs should be performed. A tire spreader is very helpful (Fig. 5) but use care when working around it. Keep the spreader arms closed when the machine is idle.

Inspect the rim parts carefully for rust; damage or distortion (Fig. 6). Never use rims, locking rings or flanges which are out of shape, rusted or cracked or broken in any way. Never use a ring or other rim parts of different manufacture than the original rims or any different size, or type.

Tires and rims often require a buffing operation before being mounted once the regular repairs have been made.

Always wear Safety Goggles, or a face shield when performing any buffing operation.

Avoid hammering rings or rims with steel hammers. Small bits of steel may be broken off the hammer or rim, flying into the eyes (wear safety goggles) face or body. Use rubber-covered, steel-headed hammers wherever possible (Fig. 7). Rubber mallets only should be used on passenger car tires; although with modern tire changing equipment no pounding is necessary.

Make certain the rim ring is seated to full depth of the groove, fits tightly all around, and is securely locked.

Stand away from the valve stem as far as possible while inflating tires. Avoid a position where the face or body is immediately over the work being done on any tire in which there is pressure.

Use only accurate, tested gauges to insure proper air pressure. Check all gauges regularly with a master gauge.

Play it SAFE. Set a good example for others who work with you. Follow the above suggestions completely. If you are ever tempted to take a short cut because you are in a hurry, that is the time that **you could get hurt!**

With certain types of wheels, however, it is necessary to seat the rings while the tire is being inflated. In either case **before inflating study the next step.**

Attach a portable safety device, made especially for the purpose, to the assembly. This portable device should be used with all types of wheels and rims.

Or, if the assembly is not of the type which requires inflation to seat the rings, a **Safety Cage** should be used, although the portable device is the best (Fig. 8).

ADJUSTMENTS

WHEEL BALANCING

See the instructions provided with the Rotunda Wheel Balancer.

Make certain that the brakes are not dragging before attempting to spin the wheels. On vehicles equipped with disc brakes, push the brake shoes into the caliper to free the rotor.

FRONT WHEEL BEARING MAINTENANCE

Wheel bearings are adjustable to correct for bearing and spindle shoulder wear. Satisfactory operation and long life of bearings depend on proper adjustment and correct lubrication. **If bearings are adjusted too tightly, they will overheat and wear rapidly. An adjustment that is excessively loose will cause pounding and contribute to uneven tire wear, steering difficulties and inefficient brakes. The bearing adjustment should be checked at regular inspection intervals.**

CLEANING AND INSPECTION

WHEELS

Wheel stud nuts should be inspected and tightened in the first 500 miles, to avoid accidental loosening of the wheels. Loose wheel stud nuts may cause shimmy and vibration. Elongated stud holes in the wheels may also result from the loose stud nuts.

Keep the wheels and hubs clean. Stones or lumps of mud wedged between the wheel and drum will unbalance a wheel and tire.

Check for damage that would affect the runout of the wheels. Wobble or shimmy caused by a damaged wheel will eventually damage the wheel bearings. Inspect the wheel rims for dents that could permit air to leak from the tires.

TIRES

The tires should be checked frequently to be sure that the air pressures agree with those specified for the tires and vehicle model. Inspect the tire threads, and remove all stones, nails, glass or other objects that may be wedged in the thread. Check for holes or cuts that may permit air leakage from the tire, and make the necessary repairs.

Inspect the tire side walls for cuts, bruises, and other damage. If internal damage is suspected, demount the tire from the wheel for further inspection and repair or replacement.

Check the tire valve for air leaks, and replace the valve if necessary. Replace any missing valve caps.

On F-100, 250, 350 and Econoline models, it is important that except for deep dish (dual type) all be balanced.

Fig. 9 describes common tire wear conditions.

FRONT WHEEL BEARINGS

Wheel bearings are adjustable to correct for bearing and spindle shoulder wear. Satisfactory operation and long life of bearings depend on proper adjustment and correct lubrication **If**

bearings are adjusted too tightly, they will overheat and wear rapidly. An adjustment that is excessively loose will cause pounding and contribute to uneven tire wear, steering difficulties and inefficient brakes. The bearing adjustment should be checked at regular inspection intervals.

Front hubs and bearings should be cleaned, inspected and lubricated whenever the hubs are removed or at the mileage/time periods indicated in the maintenance schedule.

New hub grease seals should be installed when the hub is removed. An imperfect seal may permit bearing lubricant to reach the brake linings resulting in faulty brake operation and necessitating premature cleaning or replacement of linings.

Bearing adjustment is described in Part 11-10 for front wheels. Part 11-12 covers front drive bearing adjustment. Part 11-11, and 11-14 cover rear wheel bearing adjustments.

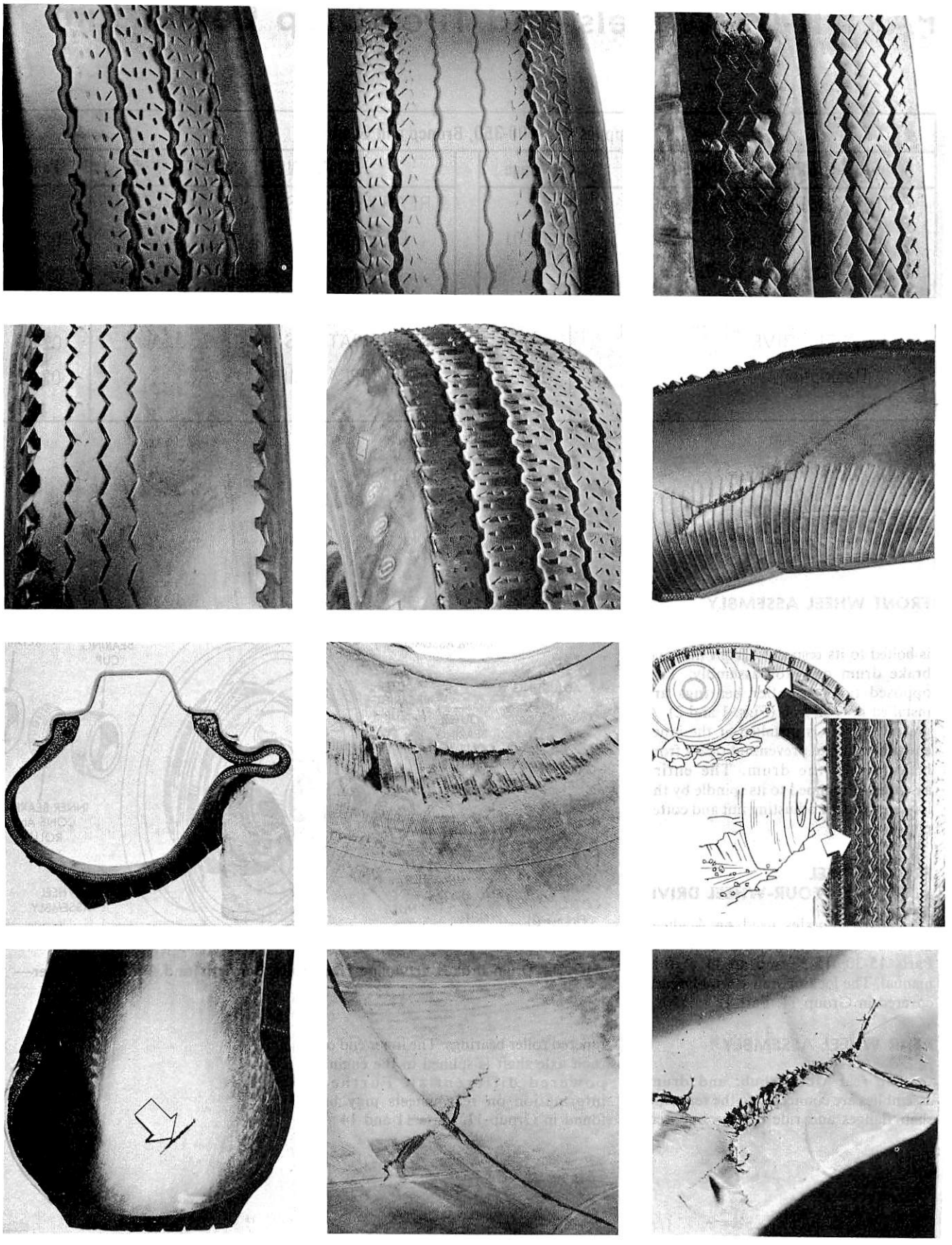

FIG. 9 Tire Wear Conditions

PART 11-02 Wheels and Tires Drop Center Rim

Applies to F-100-350, Bronco and Econoline

COMPONENT INDEX	Page	COMPONENT INDEX	Page
FRONT WHEEL ASSEMBLY		REAR WHEEL ASSEMBLY	
Description	02-01	Description	02-01
FRONT WHEEL ASSEMBLY		WHEEL REPLACEMENT	02-02
4-WHEEL DRIVE		SPECIFICATIONS	02-03
Description	02-01	TIRE REPLACEMENT	02-02

DESCRIPTION

FRONT WHEEL ASSEMBLY

Each front wheel and tire assembly is bolted to its respective front hub and brake drum or rotor assembly. Two opposed tapered roller bearings are installed in each hub (Figs. 1 and 2). A grease retainer is installed at the inner end of the hub to prevent lubricant from leaking into the drum. The entire assembly is retained to its spindle by the lock nut and/or adjusting nut and cotter pin.

FRONT WHEEL ASSEMBLY—FOUR-WHEEL DRIVE

The front axles used on 4-wheel drive models are covered in Group 15, Parts 15-30, 15-32 and 15-33 of this manual. The locking hub assemblies are covered in Group 11, Part 12.

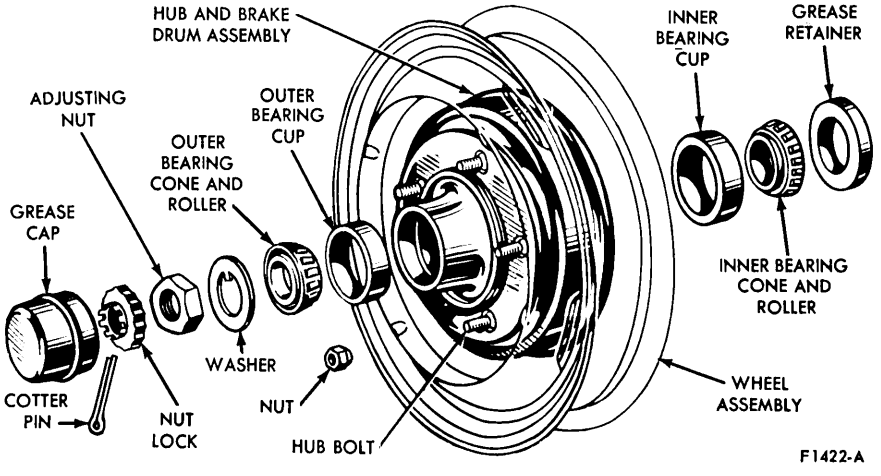

FIG. 1 Drum Brakes Econoline Front Hub, Bearings and Grease Retainer—

REAR WHEEL ASSEMBLY

The rear wheel, hub, and drum assemblies are connected to the rear axle shaft flanges and ride on two opposed tapered roller bearings. The inner end of each axle shaft is splined to the engine powered differential. Further information on rear wheels may be found in Group 11, Parts 11 and 14

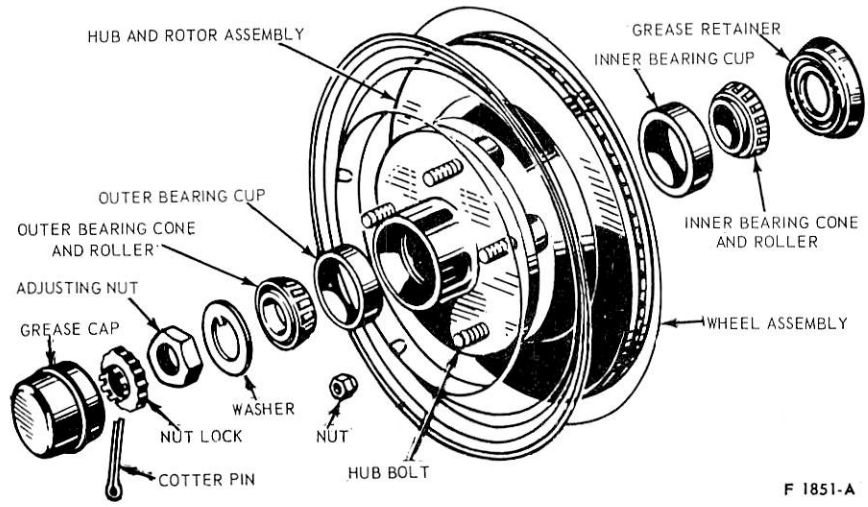

FIG. 2 Front Hub, Bearings and Grease Retainer—Disc Brakes—Typical

REMOVAL AND INSTALLATION

WHEEL REPLACEMENT

LIGHT VEHICLES

Removal

1 Pry off the hub cap (if the vehicle is so equipped), and loosen but do not remove the wheel stud nuts.
2. Raise the truck until the wheel and tire clear the floor.
3. Remove the wheel stud nuts and the wheel and tire from the hub and drum assembly, or the hub and rotor assembly.

Installation

1. Clean all dirt from the hub and drum. The replacement wheel and tire must be clean.
2. Position the wheel and tire on the hub and drum assembly, or the hub and rotor assembly and install the wheel stud nuts. Tighten the stud nuts enough to hold the wheel firmly in place. **Always tighten alternate nuts to draw the wheel evenly against the hub and drum.**

On dual wheels, except F-350, P-350 and P-400 be sure to back off the outer nut before tightening the inner nut. Then tighten the outer nut. F-350, P-350 and P-400 dual wheels have mounting bolt holes which are alternately flared inward and outward. These surfaces must be mated when the sheels are mounted. Fig. 3 illustrates the dual wheel radial alignment locating pin used on certain applications.

3. Lower the vehicle to the floor, and tighten the wheel stud nuts to the specified torque. **On a new vehicle, and each time a wheel and tire is installed, the wheel nuts should be checked for tightness.** When installing the hub cap, notice the wheel hubs. The hub cap should be positioned on the wheel over one of the retaining hubs and the two locating hubs. Be sure that the lip of the hub cap is firmly seated in the groove of the retaining hub, and then force the cap over the second retaining hub. **Any other procedure necessitates heavy pounding with possible damage to the hub cap.**

MEDIUM VEHICLES

Removal

1. Loosen but do not remove the wheel stud nuts.
2. Raise the vehicle until the wheel and tire clear the floor.
3. Remove the wheel stud nuts and the wheel and tire from the hub and drum.

Installation

1. Clean all dirt from the hub and drum. The replacement wheel and tire must be clean.
2. Position the wheel and tire on the hub and drum, and install the wheel stud nuts. Tighten the stud nuts enough to hold the wheel firmly in place. **Always tighten alternate nuts to draw the wheel evenly against the hub and drum.**

On dual wheels, be sure to back off the outer nut before tightening the inner nut. Then tighten the outer nut.

3. Lower the truck to the floor, and tighten the wheel stud nuts to the specified torque. **On new vehicles, and each time a wheel and tire is installed, the wheel nuts should be checked for tightness.**

TIRE REPLACEMENT PRECAUTIONS

The tire must be completely deflated before removal, and the bead must not be damaged by a tire iron.

After installation, a tube tire should be inflated to recommended pressure, deflated, and then inflated again to insure that the tube is not folded inside the tire. Be sure the tube flap is properly positioned before inflating the tire. **On F-100 and 250 series, it is important that each front and rear tire and wheel be balanced.**

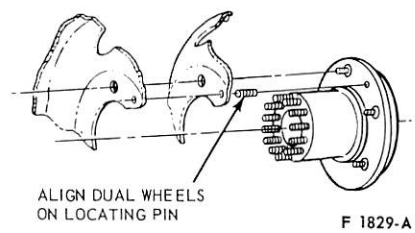

FIG. 3 Dual Wheel Radial Alignment to Hub (F-350)

On E-100 and E-300 all wheels should be balanced. On U-100, and vehicles with dual rear wheels, only front wheels should be balanced.

When installing tires on vehicles equipped with Bead Ledge rims, thoroughly lubricate the tire beads. Inflate the tire until thebead seats against the rim of the wheel, then deflate to the specified pressure. Follow the instructions supplied with the Rotunda (KKRE-888 or equivalent) tire changer.

SPECIFICATIONS

WHEEL TORQUE LIMITS – F-100 THRU F-350, ECONOLINE, BRONCO, P-350 THRU 500

Model	Nut Size	Ft-Lbs
E-100, E-200 F-100 (4 x 4), U-100 (Std. Wheel) P-100 F-250-250 (4 x 4) P-350 (W-5200 lb. Axle)	1/2-20	90
E-300 (8-Stud Wheel) F-350, P-350 P-400, (W/8-Stud Wheel and 7400 lb. Axle)	9/16-18	135

Model	Nut Size	Ft-Lbs
F-350, P-350, P-450, (W/Dual Wheels and 7400 lb Axle)	9/16-18	210
P-350, P-400 (W/17" Wheels)	5/8-18	210
P-500	3/4-16 or 1-1/8-16	450

CF 1804B

PART 11-03 Wheels and Tires—Two Piece Rims

Applies to All 500-9000 Series Vehicles				
COMPONENT INDEX	Page		COMPONENT INDEX	Page
TIRE REMOVAL AND MOUNTING – Two-Piece Rims	03-01		TIRE REMOVAL AND MOUNTING – Two-Piece Semi-Drop Center Rims	03-02

DESCRIPTION

Two-piece rims, for disc wheels are used with tube-type tires only. These rims have a 5 degree tapered seat and are available in 5.0, 5.50 and 6.5 rim sizes. **Refer to the first page of Group 11, Part 01 for safety procedures and illustrations.**

REMOVAL AND INSTALLATION

The tire must be completely deflated before removal, and the bead must not be damaged by a tire iron.

After installation, a tube tire should be inflated to recommended pressure, deflated, and then inflated again to insure that the tube is not folded inside the tire. Be sure the tube flap is properly positioned before inflating the tire.

TIRE REMOVAL AND MOUNTING—TWO PIECE RIM

REMOVING TIRE FROM WHEEL

To remove the rim ring (Fig. 1) from a rim without a tire, stand the wheel up so that the tool slot of the ring is at the top, and the lower portion of the ring is in the rim well. Insert the rim tool between the rim slot and the gutter of the rim, lift the ring over the gutter, and pry the ring off the rim (Fig. 2).

1. Place the wheel (ring side up) on the floor. Insert the hook end of the rim tool between the ring flange and the tire bead, and continuing around the ring, pry the tire off the tapered seat of the ring (Fig. 2).
2. Press the side of the ring opposite the double embossing down into the ring well. Insert the straight end of the rim tool into the notch between and below the double embossing (Fig. 4).
3. Force the tool downward to disengage the ring from the rim gutter. **Work the tool around the rim, freeing the ring from the rim, and remove the ring.**
4. Turn the wheel over and loosen the opposite tire bead from the rim by hammering the hook end of the rim tool between the rim flange and the tire bead. Pry the tire bead away from the taper, and remove the tire from the rim (Fig. 3).

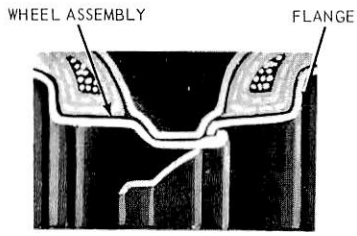

FIG. 1 Two-Piece Rim Installation

Mounting Tire to Wheel

1. After positioning the tube in the tire, place the wheel gutter (Fig. 4). Hook the section soap both beads of the tire and position the tire on the rim.
2. After positioning the tube in the tire, place the wheel gutter (Fig. 4). Hook the section opposite the notch under the gutter so that the cutaway portions of the ring retaining bead span the rim gutter (Fig. 4).
3. Insert the straight end of the rim tool in the notch, and pull the ring onto the rim, at the same time forcing the ring over the gutter with a soft hammer (Fig. 5). Remove the tool, and continue to drive the ring down until it is entirely engaged in the gutter. **Press down on the ring (as shown in Fig. 5) to make certain that it will rock. If there is no movement, the ring is not completely seated and will be forced off violently, either during inflation**

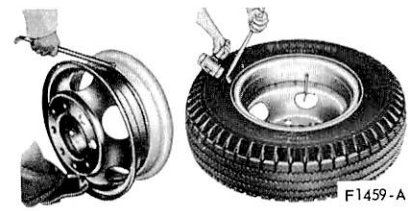

FIG. 2 Removing Ring and Loosening Tire Bead—Two-Piece Rim

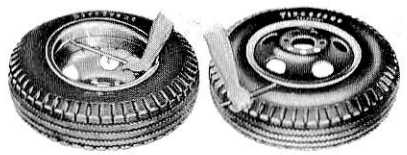

F1460-A

FIG. 3 Removing Ring and Removing Tire—Two-Piece Rim



F1027-A

FIG. 4 Positioning and Starting Ring—Two-Piece Rim

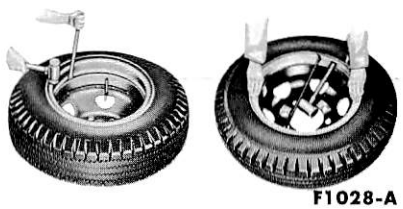

F1028-A

FIG. 5 Installing and Checking Ring—Two-Piece Rim

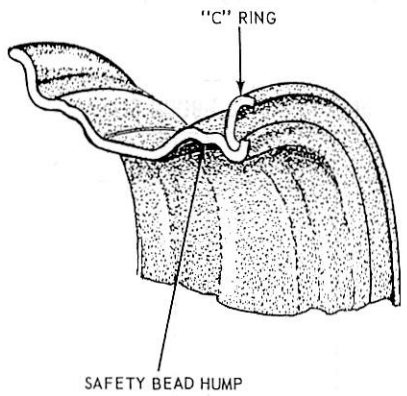

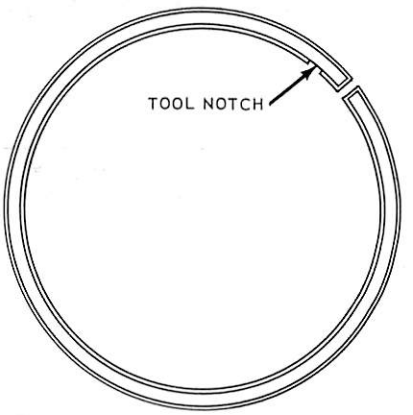

F1473-B

FIG. 6 Two-Piece Split Ring

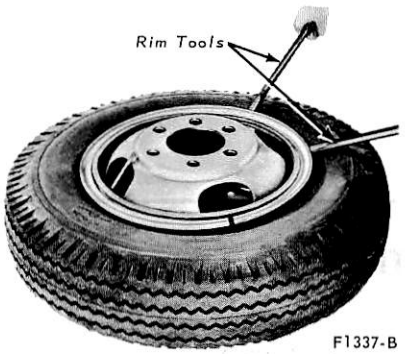

F1337-B

FIG. 7 Loosening Tire Bead



F1338-B

FIG. 8 Removing Split Ring

or when the truck is operated. When inflating the tire, do not stand in front of the ring.

TIRE REMOVAL AND MOUNTING—TWO-PIECE SEMI-DROP CENTER RIM WITH C-STYLE RING

This two-piece wheel uses a split C-type ring (Fig. 6).

REMOVAL OF SIDE RING FROM RIM WITHOUT TIRE

1. Stand the wheel up so that the tool slot of the ring is at the top and the lower portion of the ring is in the rim well.
2. Insert the rim tool between the rim slot and the gutter of the rim. Lift the ring over the gutter, and pry the ring off the rim.

REMOVAL OF SIDE RING FROM RIM WITH TIRE

1. Deflate tire completely and place the wheel (ring side up) on the floor.
2. Break the tire bead free from the rim, being careful not to damage the bead (Fig. 7).
3. Insert the straight end of the rim tool into and under the notch in the ring (Fig. 8).
4. Force the tool downward to disengage the ring from the rim gutter. Work the tool around the rim, freeing the ring from the rim, and remove the ring.
5. Turn the wheel over and loosen the opposite tire bead from the rim by hammering the hook end of the rim tool between the rim flange and the tire bead. Pry the tire bead away from the taper, and remove the tire from the rim (Fig. 9).

MOUNTING TIRE TO WHEEL

1. Position the tube in the tire and place the wheel (gutter side up) on the floor. Soap both beads of the tire and position the tire on the rim. It is important that the tire be soaped well as it must be forced over the safety bead hump and the rim edge (Fig. 10).
2. Position the ring with the notch about 3 inches from the valve stem.
3. Insert the rim tool under the ring at a position approximately 180 degrees from the notch and pry onto rim. Work the remaining section of rim over the gutter with a second tool.
4. Make certain that the ring is entirely seated in the gutter. If the ring is not seated correctly as described, it may be forced off violently, either during inflation or when the truck is operated.
5. After installation, the tire should be over-inflated to 75 psi to snap the tire beads over the bead humps and fully seat the tire against the rim and side ring. Then the tire should be deflated, and then inflated again to recommended pressure to insure that the tube is not folded inside the tire. Be sure the tube flap is properly positioned before inflating the tire. **Always use a cage or safety chain**

during initial inflation.

It is important that the new C shaped side ring be used only with the new wheel with a bead hump. (See Fig. 6). The old style ring must be used only with the old tapered seat rim.

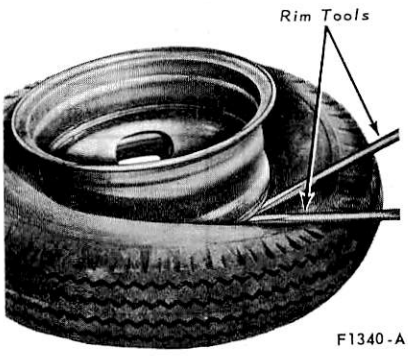

FIG. 9 Removing Tire From Rim

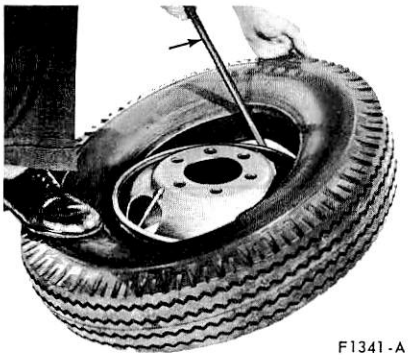

FIG. 10 Installing Tire First Bead on Wheel

PART 11-04 Wheels and Tires—Three Piece Rims

Applies to All 500-9000 Series Vehicles

COMPONENT INDEX	Page	COMPONENT INDEX	Page
TIRE REMOVAL AND MOUNTING – Three-Piece Rims	04-01	TIRE REMOVAL AND MOUNTING – Cast Spoke Wheels	04-02

DESCRIPTION

Three-piece rims are nondemountable for disc wheels or demountable for cast spoke wheels, Fig. 1, shows a dual wheel sectional view.

Demountable rims for cast-spoke wheels are secured by a lane at the back edge of each spoke, and a lug retained by a stud and nut at the edge of each spoke. **Refer to the first page of Group 11, Part-01 for safety procedures and illustrations.**

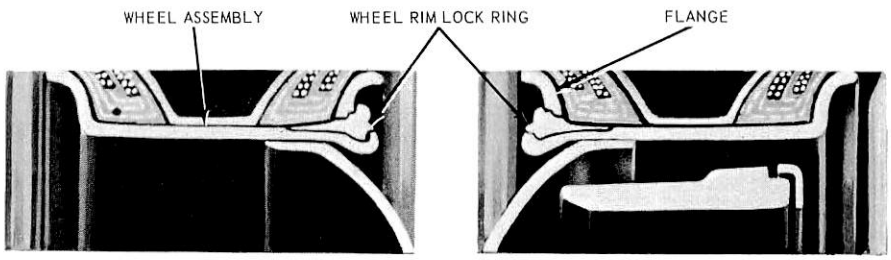

FIG. 1 Three-Piece Rim—Dual Wheel Sectional View

REMOVAL AND INSTALLATION

The tire must be completely deflated before removal, and the bead must not be damaged by a tire iron.

After installation, a tube tire should be inflated to recommended pressure, deflated, and then inflated again to insure that the tube is not folded inside the tire. Be sure the tube flap is properly positioned before inflating the tire.

TIRE REMOVAL AND MOUNTING—THREE-PIECE RIM

Tire mounting procedures are the same for disc wheels and for cast wheels equipped with the three-piece rims, escept that cast spoke wheels require special final centering and run-out adjustment.

Removing Tire From Wheel

1. Place the wheel and deflated tire on the floor, with the ring up. Insert the straight end of the rim tool in the depression in the locking ring and loosen the tire bead by pressing down on the side ring (Fig. 2).
2. Insert the straight end of the rim tool in the notch provided in the locking ring, and pry the locking ring out of the gutter (Fig. 2). Lift out the locking ring, and remove the slide ring (Fig. 3).
3. Turn the wheel over and loosen the tie bead from the rim by hammering the hooked end of the rim tool between the rim flange and the tire bead. Pry the tire bead away from the taper all the way around the rim until the tire is free. Remove the tire.

Mounting Tire To Wheel

1. Position the wheel (gutter side up) on the floor. Soap both beads of the tire and position the tire on the rim.
2. Position the solid side ring on the tire, and insert the tapered toe of the split locking ring between the rim and the side ring (Fig. 3).
3. Using a soft hammer, drive the locking ring into place (Fig. 4). Start at one end of the split ring and progressively drive the ring into the gutter until the entire ring is seated (Fig. 4). **The ring must be entirely seated around the entire**



FIG. 2 Loosening Tire Bead and Locking Ring—Three-Ring Rim

circumference of the rim. The split ends must be engaged in the gutter, or the ring will be forced off violently during inflation or when the truck is driven. When inflating the tire do not stand in front of the ring.

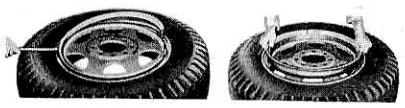

F1462-A

FIG. 3 Removing Locking Ring and Positioning Locking Ring—Three-Piece Rim

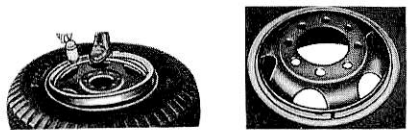

F1463-A

FIG. 4 Starting Locking Ring and Locking Ring Installed—Three-Piece Rim

TIRE REMOVAL AND MOUNTING—CAST SPOKE WHEELS

Removal

1. To remove the rim and tire from a cast wheel, apply the parking brake, and block at least one wheel. Raise the vehicle and rim clamps.
2. With dual rear wheels, lift off the outer rim and tire, remove the spacer rim, and the inside rim and tire assembly.

Installation

1. To install the tire and rim on a dual wheel, place the inner tire and rim on the wheel hub. The rim must ride high enough up on the tapered retainer flange of the inner section of the wheel to prevent the assembly from sliding down on the tapered surface.
2. Position the spacer between the inner and outer rim.
3. Place the outer rim and tire assembly on the wheel, and install the 6 clamps (Fig. 5). First, draw up the top clamp tightly so that the spacer will push the inner rim up on the tapered surface of the inner section of the wheel, and then tighten the bottom clamp. This procedure tends to center the rim on the wheel.

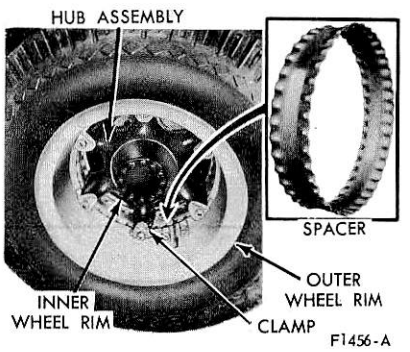

FIG. 5 Three-Piece Rim Installed on Cast Wheel

4. Tighten the remaining clamps alternately and evenly, and torque all wheel nuts to specification. Lateral or side run-out should not exceed 1/8 inch for front rims and 1/4-inch for dual rear rims, checked at the outer bead surface of the wheel.

PART 11-10 Wheels, Hubs and Bearings—Front (Except Front Drive)

Applies to F100-F-350, P-350, P-500 and E100/300

COMPONENT INDEX	Page	COMPONENT INDEX	Page
FRONT WHEEL ASSEMBLY		FRONT WHEEL GREASE	
Description	10-01	SEAL AND BEARING	
FRONT WHEEL BEARING		Removal and Installation	10-02
Adjustment	10-01	Repacking	10-02

DESCRIPTION

FRONT WHEEL ASSEMBLY

Each front wheel and tire assembly is bolted to its respective front hub and brake drum or rotor assembly. Two opposed tapered roller bearings are installed in each hub (Fig. 1, Part 11-02 and Figs. 3 and 4 of this Part). A grease retainer is installed at the inner end of the hub to prevent lubricant from leaking into the drum. The entire assembly is retained to its spindle by the locknut and/or adjusting nut and cotter pin, or an adjusting nut, lock nut combination (Figs. 3 and 4).

ADJUSTMENTS

FRONT WHEEL BEARING ADJUSTMENT

To check the wheel bearing adjustment, raise the front of the vehicle, grasp the tire at the sides, and alternately push inward and pull outward on the tire. If any looseness is felt, adjust the front wheel bearings.

F-100, 250, 350, ECONOLINE

1. Remove the hub cap and remove the grease cap from the hub.
2. Wipe any excess grease from the end of the spindle and remove the cotter pin and nut lock.
3. While rotating the wheel, torque the adjusting nut (Fig. 1, Part 11-02) to 17-25 ft-lb to seat the bearings.
4. Install the nut lock so that the cotter pin hole in the spindle is aligned with a slot in the nut lock.
5. Back off the adjusting nut and nut lock two slots of the nut lock and install the cotter pin.
6. Check the front wheel rotation. If the wheel rotates freely with no noticeable end play, install the grease cap. If the wheel is still loose, or it rotates roughly or noisily, the bearing cones and rollers and the cups are dirty or worn and should be cleaned or replaced.
7. Install the hub cap.

P-350 THRU 500

1. Remove the hub cap, if so equipped, and remove the grease cap from the hub.
2. Remove any excess grease from the end of the spindle and remove the adjusting nut cotter pin.
3. While rotating the wheel, torque the adjusting nut (See Fig. 4, under Disassembly and Assembly) to 40-55 ft-lbs to seat the bearings.
4. Back off the adjusting nut to the next castellation if necessary to align the nut with the cotter pin hole. Then, back off the adjusting nut two castellations and install the cotter pin.
5. Check the front wheel rotation. If the wheel rotates freely with no noticeable end play, install the grease cap. If the wheel is still loose, or it rotates roughly or noisily, the bearing cones and rollers and the cups are dirty or worn and should be cleaned or replaced.
6. Install the hub cap, if used.

ALL MEDIUM, HEAVY AND EXTRA HEAVY TRUCKS

Single Nut with Cotter Pin (5000-7000 Pound Front Axles)

1. While rotating the wheel, torque the adjusting nut to 70-100 ft-lb to seat the bearings.
2. Back off the adjusting nut 180 degrees (one half turn).
3. Hand tighten the adjusting nut finger tight (13-17 in-lb) while moving the top part of the tire in and out.

4. If the cotter pin hole lines up with a castellation in the nut, insert and secure a new cotter pin. If they do not line up, back off the adjusting nut to align a castellation with the first available cotter pin hole. Final bearing adjustment must provide .001-.010 end play.
5. Install the gasket and grease cap and adjust the brakes. **The final adjustment must not result in a preloaded bearing.**

DOUBLE NUT WITH LOCK RING (15000 POUND FRONT AXLE)

1. While rotating the wheel in both directions, torque the adjusting nut to 100-125 ft-lbs to seat the bearings.
2. Back off the adjusting nut one complete turn (See Fig. 4, under Removal and Installation).
3. Again while rotating the wheel in both directions, retorque the adjusting nut to 40-55 ft-lb.
4. Back off the adjusting nut to obtain an initial .004 and .010 inch end play between the wheel hub and spindle.
5. Install the lock ring.
6. Install the washer with the dimple indexed in one of the holes in the locking ring.
7. Install the lock nut and torque to 100-125 ft-lb.
8. Recheck the end play (Final limit .001 to .010 inch). Re-adjust if necessary.
9. Bend the washer outward to lock the nut in position.
10. Install the gasket and grease cap and adjust the brakes. **The final adjustment must not result in a preloaded bearing.**

DOUBLE NUT WITH DOUBLE WASHER (12000 POUND CENTER POINT AXLE)

1. While rotating the wheel in both directions, torque the adjusting nut to 100-125 ft-lb to seat the bearings.
2. Back off the adjusting nut one complete turn (See Fig. 4, under Disassembly and Assembly).
3. Again while rotating the wheel in both directions, retorque the adjusting nut to 40-55 ft-lb.
4. Back off the adjusting nut to obtain an initial .004 to .010 inch end play between the hub and spindle.
5. Install the outer washer and lock nut and torque to 100-125 ft-lb.
6. Recheck the end play (final limit .001 to .010 inch). Re-adjust if necessary.
7. Install the gasket and grease cap and adjust the brakes. **The final adjustment must not result in a preloaded bearing.**

SINGLE NUT WITH COTTER PIN (16000, 18000 AND 20000 POUND FRONT AXLE)

1. While rotating the wheel in both directions, torque the adjusting nut to 100-125 ft-lb to seat the bearings.
2. Back off the adjusting nut one complete turn (See Fig. 4, under Disassembly and Assembly).
3. Again while rotating the wheel in both directions, retorque the adjusting nut to 40-55 ft-lb.
4. Back off the adjusting nut if necessary to align the nut castellations with the first available cotter pin hole.
5. Using the same cotter pin hole as a reference point, back off the adjusting nut **one additional castellation** to allow the wheel to rotate freely within the limits of .001 to .010 inch end play.
6. Insert and secure the cotter pin.
7. Install the gasket and grease cap and adjust the brakes. **The final adjustment must not result in a preloaded bearing.**

DOUBLE NUT WITH LOCK RING (9000 AND 12000 POUND FRONT AXLE)

1. While rotating the wheel in both directions, torque the adjusting nut to 100-125 ft-lb to seat the bearing.
2. Back off the adjusting nut one complete turn.
3. Again while rotating the wheel in both directions, retorque the adjusting nut to 40-55 ft-lb.
4. Back off the adjusting nut to obtain an initial .004 to .010 inch end play between the wheel hub and spindle.
5. Install the lock ring making sure the adjusting nut dowel is inserted into the lock ring.
6. Install the outer washer and lock nut. Torque to 100-150 ft-lb.
7. Recheck the end play (final limit .001 to .010 inch). Re-adjust if necessary.
8. Bend the washer outward to lock the outer nut in position.
9. Install the gasket and grease cap and adjust the brakes. **The final adjustment must not result in a preloaded bearing.**

DISASSEMBLY AND ASSEMBLY

FRONT WHEEL GREASE SEAL AND BEARING REMOVAL AND INSTALLATION AND/OR REPACKING

Wheel bearing lubricant has been changed from sodium base grease to lithium base grease.

Sodium base grease is not compatible with lithium base grease and should not be intermixed. Therefore, do not lubricate front and/or rear wheel bearings without first ascertaining the type of original wheel bearing lubricant. Usage of incompatible bearing lubricants could result in premature lubricant breakdown.

If bearing adjustment will not eliminate looseness or rough and noisy operation, the hub and bearings should be cleaned, inspected, and repacked with specified wheel grease. If the bearing cups or the cone and roller assemblies are worn or damaged, they should be replaced.

LIGHT VEHICLE-E100, E300, P350 AND P500

1. Raise the vehicle until the wheel and tire clear the floor and remove the wheel and tire from the hub. If the drums will not remove easily, back off the brake shoe adjusting screw so that the shoes do not contact the brake drum. Remove the grease cap from the hub.
2. Remove the cotter pin, nut lock, adjusting nut and washer from the spindle (Fig. 1, Part 11-02).
3. Remove the outer bearing cone and roller. Pull the hub and drum assembly off the wheel spindle. Then, remove and discard the grease retainer. Remove the inner bearing cone and roller from the hub. **Remove all traces of old lubricant from bearings, hubs, and axle spindle.**
4. Inspect the cups for scratches, pits or cracks. If the cups are worn or

damaged, remove them with a drift. Clean the inner and outer bearing cones and rollers with solvent and dry them thoroughly. **Do not spin the bearings dry with compressed air.**

5. Inspect the cones and rollers for cracks, nicks, brinelling, or seized rollers. Inspect the grease retainer and replace it if it is cracked, nicked, or dented. If the new grease retainer is leather, soak it in light engine oil for about 30 minutes before installation.
6. Cover the spindle with a clean cloth and brush all loose dust and dirt from the brake assembly. **Remove the cloth from the spindle carefully to prevent dirt from falling on the spindle.**
7. Install the inner and outer bearing cups in the hub with the appropriate installing Tool (Fig. 1). Be sure to seat the cups properly in the hub. The cups will be properly seated when they are fully bottomed. Pack the inside of the hub with C1AZ-19590-B wheel bearing grease. Fill the hub until the grease is flush with the inside diameters of both bearing cups. Pack the bearing cones and rollers with wheel bearing grease. Use a bearing packer for this operation. If a packer is not available, work as much lubricant as possible between the rollers and cages. Lubricate the cone surfaces with grease.
8. Place the inner bearing cone and roller in the inner cup and install the grease retainer (Fig. 2) with the appropriate driving tool. Be sure that the retainer is fully bottomed. Install the hub and drum on the wheel spindle. **Keep the hub centered on the spindle to prevent damage to the grease retainer or the spindle threads.**
9. Install the outer bearing cone and roller and the flat washer on the spindle, then install the adjusting nut.
10. Adjust the wheel bearing as outlined under Adjustments.

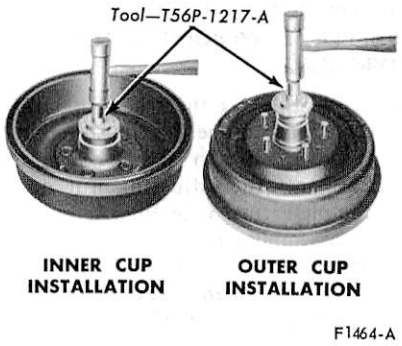

FIG. 1 Installing Bearing Cups

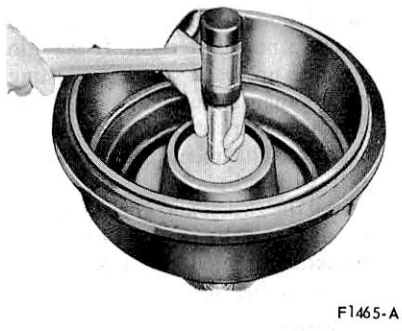

FIG. 2 Installing Grease Retainer

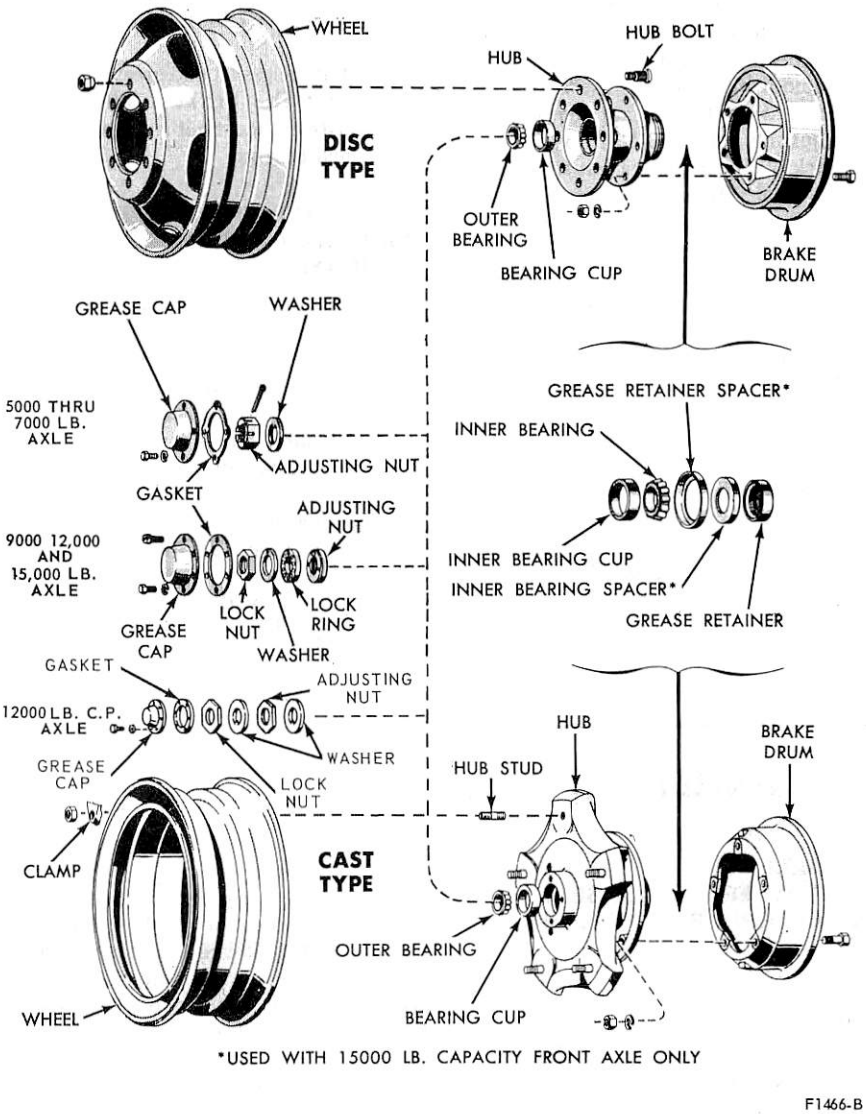

FIG. 3 Typical Front Hubs and Bearings

F100-F350 Disc Brake Equipped

The removal and installation of front wheel grease seals and bearings for disc brake equipped vehicles differs only in two respects from the procedure for drum brake equipped vehicles. First it is necessary to remove the brake caliper (refer to Group 12, Part 24). In this case the caliper can be suspended by wiring it above the hub and rotor.**Be careful not to twist or strain the flexible brake line.**

Then follow the procedure outlined for E100-E300 and P350-P500 with only one exception. A different tool, T37T-1190-B is required to install the special shielded grease seal. Finally, install the brake caliper following the steps given in Group 12, Part 24.

MEDIUM, HEAVY AND EXTRA HEAVY VEHICLES

There are two basic types of hub, disc and cast, shown in Fig. 3. The basic design of the hub bearings is the same in all hubs, but minor differences in size exist between the various models. The outer bearing attaching parts differ according to front axle weight capacity as indicated in Fig. 3. For further detailed views of hubs, bearings and grease retainers See Fig. 4.

1. Raise the vehicle until the tires clear the floor and install safety stands to support the front axle. Remove the grease cap and gasket from the hub.
2. To check the wheel bearing adjustment, alternately push inward and outward on the tire. If any excessive looseness is felt or there is no end play, adjustment of the front wheel bearings is necessary.
3. With 5000, 5500, 6000, 7000, 16000, 18000 or 20000 pound capacity front axles, remove the cotter pin, adjusting nut and flat washer from the spindle. With 9000, 12000 or 15000 pound capacity front axles, remove the lock nut, washer, locking ring and the adjusting nut and pin. With a 12000 pound capacity center point front axle, remove the lock nut, inner washer, adjusting nut and outer washer.
4. Inspect the condition of the spindle and nut threads to insure a free running nut when reassembling.
5. Remove the outer bearing cone and roller. Pull the hub and drum assembly off the spindle. Remove the inner bearing and seal using a brass drift. **Be careful not to damage the bearing cage.**
6. Remove all traces of old lubricant from the bearings, hubs and axle spindle. Inspect the cups for pitting, galling or unusual wear. If either cup is worn or damaged, remove it with a brass drift. Clean the inner and outer bearing cones and rollers with solvent and dry them throughly. **Do not spin the bearings dry with compressed air.**
7. Inspect the cones and rollers for pitting, galling or unusual wear. Particularly inspect the rollers for end wear and flat or rough spots. Replace all worn or damaged assemblies. It is recommended that the cone and roller assemblies and cups be replaced in sets.
8. Replace the grease retainer.
9. Cover the spindle with a clean cloth and brush all loose dust and dirt from the brake assembly. Remove the cloth from the spindle carefully to prevent dirt falling on the spindle.
10. Install the inner and outer bearing cups in the hub with the appropriate tool (Fig. 1). Check for proper seating of the new bearing cups by trying to insert a 0.0015 inch feeler gauge between the cup and wheel hub. The feeler gauge should not enter.
11. Pack the inside of the hub with Lithium base wheel bearing grease (C1AZ-19590-B). Fill the hub until the grease is flush with the inside diameters of both bearing cups. Pack the bearing cones and rollers with wheel bearing grease. Use a bearing packer for this operation. If a packer is not available, work as much lubricant as possible between the rollers and cages. Lubricate the cone surfaces with grease.
12. Place the inner bearing cone and roller in the inner cup and install the grease retainer with the appropriate tool. Be sure the retainer is fully bottomed. On all synthetic type seals, coat the seal lips with wheel bearing grease (C1AZ-19590-B) before installing the hub and drum. On seals which are not coated on the OD with sealer by the supplier, coat the grease seal bore in the hub with a thin coat of non-hardening sealer prior to installing the grease seal.
13. Install the hub and drum on the wheel spindle. **Keep the hub centered on the spindle to prevent damage to the grease retainer or the spindle threads.**
14. With 5000, 5500, 6000, 7000, 16000, 18000 or 20000 pound capacity front axles, install the outer bearing cone and roller and the flat washer on the spindle. Then, install the adjusting nut. With 9000, 12000 and 15000 pound capacity front axles, install the outer bearing cone and roller and the bearing adjusting nut. With a 12000 pound capacity center point front axle, install the washer and adjusting nut. Make the final bearing adjustment, under Adjustments.

MEDIUM, HEAVY AND EXTRA HEAVY VEHICLES (OIL LUBRICATION)

Stemco Seals and National Seals available as regular production otpions, provide sealing where oil is used for bearing lubrication. The tools required for Stemco Seal Installation are only available from the Stemco warehouse. Refer to Specifications for the tooling required. Fig. 5 illustrates a front wheel Stemco Seal Installation.

FRONT HUB SEAL INSTALLATION

Clean all parts before starting the installation of Stemco Seals.

1. Oil the spindle and push the axle ring flush against the axle face where applicable.
2. Remove all burrs from the wheel hub bore seal area and clean thoroughly.
3. Position the seal in the hub bore (Part Number Up).

Drive the seal into position using the correct tool. It must be perfectly square with the bore, and bottom evenly. Install the wheel and adjust the bearings. Install the Stemco hub cap. Remove the filler plug and add oil (ESW-M2C105-B SAE 90). Double check the oil level before releasing the vehicle for service. Oil level must be between the oil level line on the hub cap and 1/4-inch above the line.

National Seals (Fig. 6) are installed as follows:

1. Clean all parts, remove rough spots and install axle ring flush against face where applicable.
2. Position the seal into the hub (notice oil side marking) with drive tool and hammer into a press fit.
3. Install the wheel and adjust the bearings the same as for any seal installation. Install the see through hubcap and the retaining screws.
4. Remove the filler plug and add oil to level on see through hubcap.

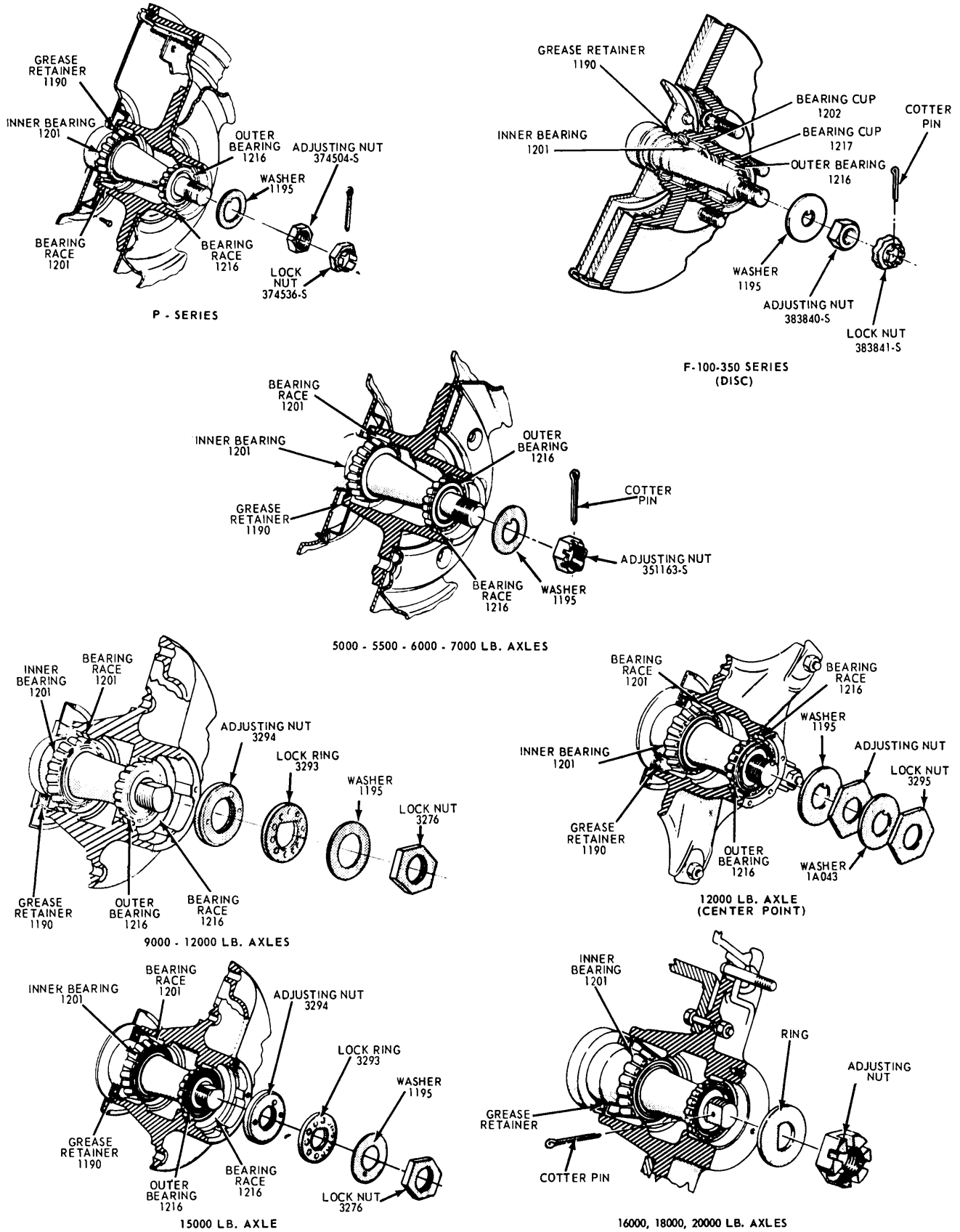

FIG. 4 Front Hubs, Bearings and Grease Retainers

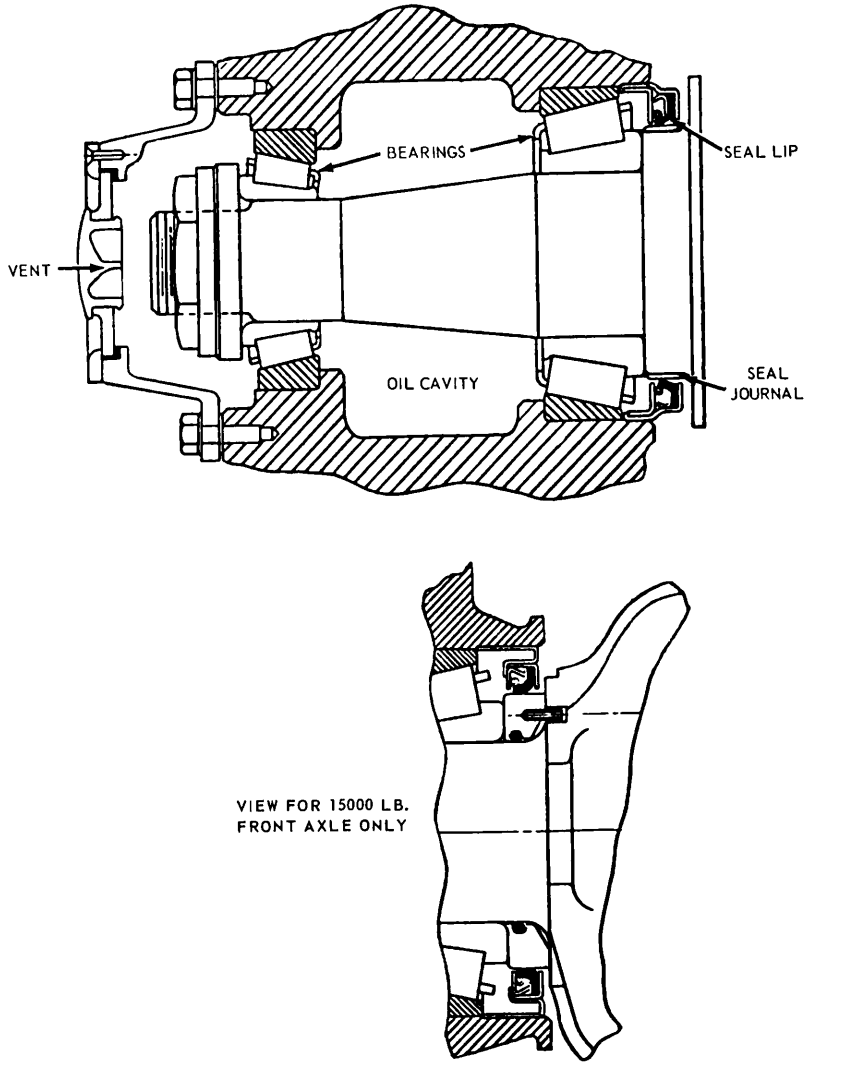

FIG. 5 Front Seal Installation (Stemco)

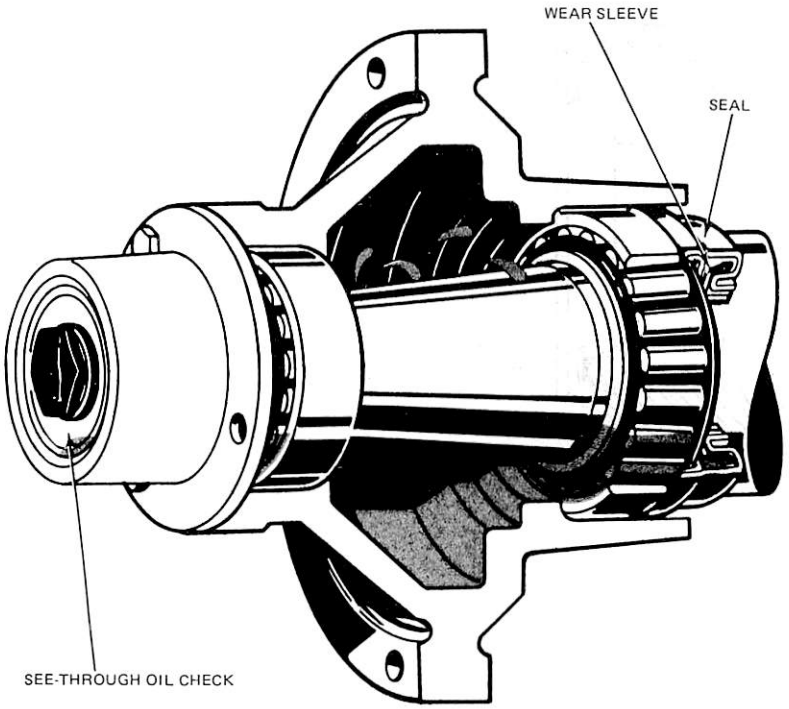

FIG. 6 National Seal Installation

SPECIFICATIONS

WHEEL TORQUE LIMITS—F-100 THRU F-350, ECONOLINE, BRONCO, P-SERIES

Model	Nut Size	Ft-Lbs
E-100, E-200	1/2-20	90
F-100 (4 x 4), U-100 (Std. Wheel) F-250-250 (4 x 4) P-350-3500 (W-5200 lb. Axle)		90
E-300 (Std. Wheel)	9/16-18	135
F-350, P-350		
F-350, P-350, P-450 P-3500, P-4000 (W/Dual Wheels and 7400 lb. Axle)	9/16-18	210
P-350, P-400, P-3500, P-4000 (W/17" Wheels)	5/8-18	210

WHEEL TORQUE LIMITS—500 THRU 9000 SERIES

Description	Nut Size	Ft-Lbs
Front Wheel Nut	All	450
Cast Wheel Rim Nut	5/8-11	170-200
	3/4-10	170-220

SPECIAL SERVICE TOOLS

Tool No.	Description
T-59T-1197-B	Front Wheel Bearing Adjustment Spanner Wrench
Tool 1175-AB	Grease Seal Remover Head
T50T-100-A	Impact Slide Hammer
T56P-1217-A	Front Hub Bearing Cup Replacer
T73T-1190-B	Shielded Grease Seal Installer

SPECIAL SERVICE TOOLS—STEMCO

Ford Seal Kit Part No.	Stemco Tool No.	Ford Seal Kit Part Name
DOHZ-1190-A	5064—5351	Kit — Front Hub Grease Retainer and Wiper
DOHZ-1190-B	5061—5062 5066—5353	
DOHZ-1190-C	5067—5398	
DOHC-1190-D	None—5386	
DOHZ-1190-E	5007—5358	
Kits on this page consist of one axle ring and one seal for just one wheel		

CF1810-C

PART 11-11 Wheel Hubs and Bearings—Rear

Applies to Bronco, Econoline E100, E200 and F-100 Only

COMPONENT INDEX	Page	COMPONENT INDEX	Page
AXLE SHAFT		REAR WHEEL BEARING	
Removal and Installation	11-01	AND SEAL	
DESCRIPTION	11-01	Removal and Installation	11-01

DESCRIPTION

REAR WHEEL ASSEMBLY

The rear wheel hub and brake drum assembly is attached to studs on the rear axle shaft flange by three speed nuts. The wheel and tire mounts on the same rear axle shaft flange studs and is held against the hub and drum by the wheel nuts. The rear wheel bearing is pressed onto the axle shaft just inside the shaft flange, and the entire assembly is retained to the rear axle housing by the bearing retainer plate which is bolted to the housing flange.

REMOVAL AND INSTALLATION

REMOVAL OF AXLE SHAFT

The rear axle shafts, wheel bearings, and oil seal can be replaced without removing the differential assembly from the axle housing.

Synthetic wheel bearing seals are used. Removal and insertion of rear axle shafts must be performed with caution. The entire length of the shaft (including spline) up the seal journal must pass through the seal without cutting of the seal element during axle removal or installation will result in early seal failure.

1. Remove the wheel cover, wheel and tire from the brake drum.
2. Remove the nuts that secure the brake drum to the axle shaft flange, then remove the drum from flange.
3. Working through the hole provided in each axle shaft flange, remove the nuts that secure the wheel bearing retainer plate. Then pull the axle shaft assembly out of the axle housing (Fig. 1). **The brake backing plate must not be dislodged. Install one nut to hold the plate in place after the axle shaft is removed.**

REMOVAL OF REAR WHEEL BEARING AND SEAL

Synthetic seals must not be cleaned, soaked or washed in cleaning solvents.

Removal of the wheel bearings from the axle shaft makes them unfit for further use.

1. Loosen the inner retainer ring by nicking it deeply with a cold chisel in several places (Fig. 2). It will then slide off easily.
2. Remove the bearing from the axle shaft with Tool T60K-1225-A.
3. **Whenever a rear axle shaft is replaced, the oil seal must be replaced.** Remove the seal with Tool 1175-AB and a slide hammer.

INSTALLATION OF REAR WHEEL BEARING AND SEAL

1. Inspect the machined surface of the axle shaft and the axle housing for rough or other irregularities which would affect the sealing action of the oil seal. Check the axle shaft splines for burrs, wear or twist. Carefully

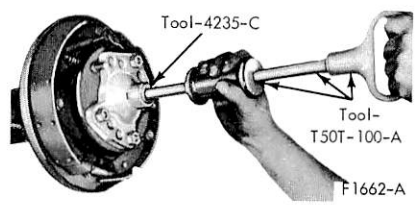

FIG. 1 Removing Axle Shaft

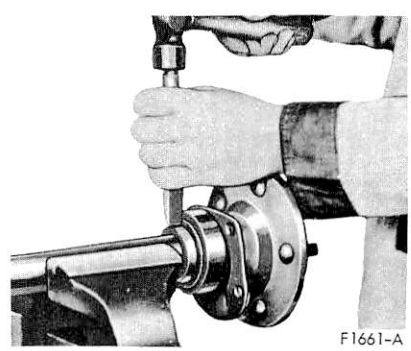

FIG. 2 Removing Rear Wheel Bearing Retainer Ring

remove any burrs or rough spots. Replace worn or damaged parts.
2. Lightly coat wheel bearing bores with axle lubricant.
3. Place the bearing retainer plate on the axle shaft, and press the new wheel bearing on the shaft with the tool shown in Fig. 3. **Do not attempt to press on both the bearing and the inner retainer ring at the same time.**
4. Using the bearing installation tool (Tool 4621-A), press the bearing inner retainer ring on the shaft until the retainer seats firmly against the bearing.
5. Install the new oil seal with the tools shown in Fig. 4. Wipe a small amount of oil resistant sealer on the outer edge of the seal before it is installed. **Do not put sealer on the sealing lip.**

INSTALLATION OF AXLE SHAFT

1. Carefully slide the axle shaft into the housing so that the rough forging of the shaft will not damage the oil seal. Start the axle splines into the side gear, and push the shaft in until the bearing bottoms in the housing.
2. Install the bearing retainer plate and the nuts that secure it. Torque the nuts to specification.
3. Install the brake drum and the drum attaching (Tinnerman) nuts.
4. Install the wheel and tire on the drum. Install the wheel cover.

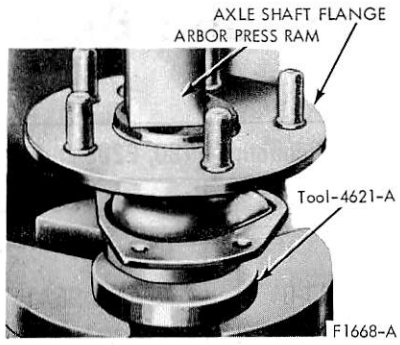

FIG. 3 Installing Rear Wheel Bearing

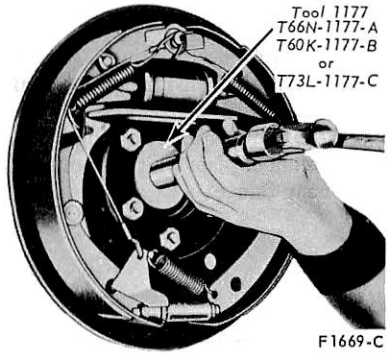

FIG. 4 Installing Rear Wheel Bearing Oil Seal

PART 11-12 Wheel Hubs and Bearings— Front Wheel Drive

Applies to Bronco, F-100, F-250 and F-600 Only

COMPONENT INDEX	Page	COMPONENT INDEX	Page
ADJUSTMENTS	12-01	DISASSEMBLY AND ASSEMBLY	12-07
DESCRIPTION	12-01	REMOVAL AND INSTALLATION	12-03

DESCRIPTION

Front drive assemblies are available for Bronco, F-100, F-250 and F-600 vehicles.

ADJUSTMENTS

FRONT WHEEL BEARING ADJUSTMENT

BRONCO AND F-100

1. Raise the vehicle and install safety stands.
2. Back off the brake adjusting screw if necessary.
3. Remove the front hub grease cap and the driving hub snap ring (Fig. 1).
4. Remove the splined driving hub and the pressure spring. This may require a slight prying assist (Fig. 2).
5. Remove the wheel bearing lock nut and lock ring.
6. Using Tool T59T-1197-B and a torque wrench, tighten the bearing adjusting nut to 50 ft-lbs while rotating the wheel back and forth to seat the bearing.
7. Back off the adjusting nut approximately 90 degrees.
8. Assemble the lock ring by turning the nut to the nearest notch where the dowel pin will enter.
9. Install the outer lock nut and torque to 80-100 ft-lbs. Final end play of the wheel on the spindle should be 0.001 to 0.010 inches.
10. Install the pressure spring and driving hub, the driving hub snap ring and after applying non-hardening sealer to the seating edge of the grease cap, install the grease cap. If equipped with free-running lock-out hubs, refer to Front Wheel Drive Lock-Out Hub Installation. The non-lockout type hub is shown in Fig. 3.
11. Adjust the brake if it was backed off.
12. Remove the safety stands and lower the vehicle.

F-250

1. Raise the vehicle and install safety stands.
2. Back off the brake adjusting screw, if necessary. Remove the wheel cover, if installed.

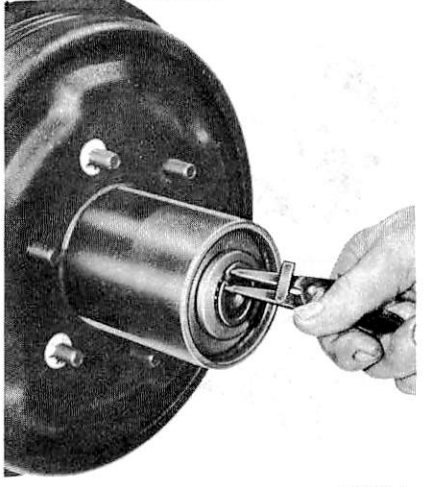

F 1812-A

FIG. 1 Removing Snap Ring

3. Remove the front hub grease cap. Remove the driving hub retaining snap ring and slide the splined driving hub from between the axle shaft and the wheel hub (Fig. 2). Remove the driving hub spacer. (If equipped with free running lock-out hubs, refer to Front Wheel Drive Lock-Out Hub Removal in Group 15).
4. With Tool T59T-1197-B, remove the lock nut and lock ring from the spindle.

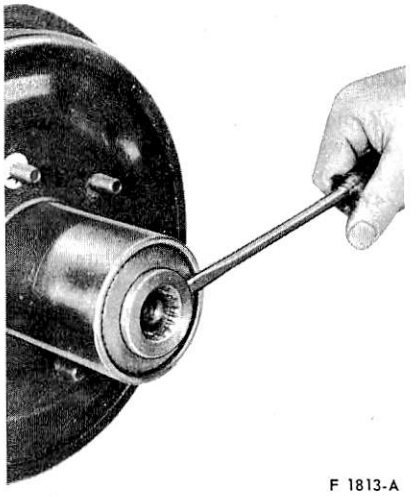

F 1813-A

FIG. 2 Removing Splined Driving Hub

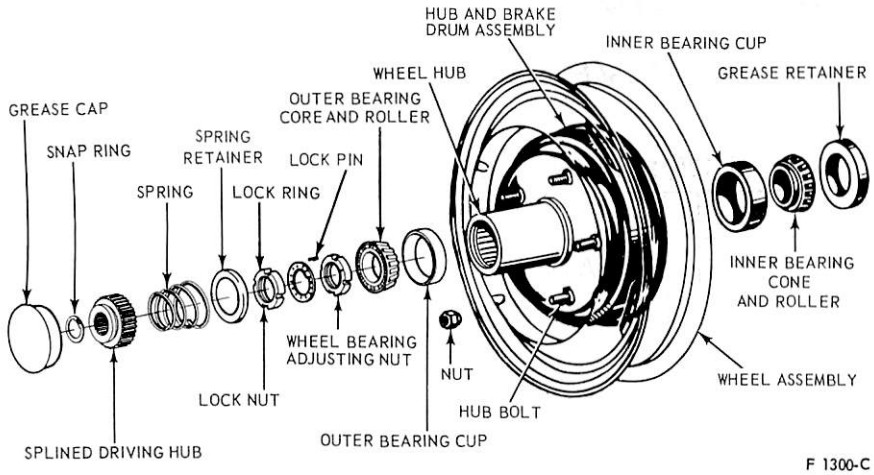

FIG. 3 Front Hub Installation—Four-Wheel Drive-non lockout type

5. Using Tool T59T-1197-B and a torque wrench, tighten the bearing adjusting nut (Fig. 2, Part 11-02) to 50 ft-lb, while rotating the wheel back and forth to seat the bearings.
6. Back the adjusting nut off approximately 90 degrees. Assemble the lock ring by turning the nut to the nearest notch where the dowel pin will enter.
7. Install the outer lock nut and torque to 80-100 ft-lbs. Final end play of the wheel on the spindle should be 0.001 to 0.010 inch.
8. **Install the driving hub, spacer, snap ring and hub grease cap. Apply a thin coat of non-hardening sealer to the setting edge of the grease cap, before installation. (If equipped with free-running lock-out hubs, refer to Front Wheel Drive Lock-Out Hub Installation).**
9. Adjust the brake, if backed off to permit drum removal.
10. Remove the safety stands and lower the vehicle.

F-600

1. Remove the outer hub cap retaining screws, and remove the cap.
2. Remove the retaining lock ring (Fig. 4).
3. Remove the retaining screws and remove the splined drive plate.
4. Bend the tab of the lock washer away from the lock nut and remove the lock nut (Fig. 5).
5. Remove the lock washer and **discard** it.
6. While rotating the wheel back and forth to correctly seat the bearings, torque the adjusting nut to 50 ft-lbs.
7. Back off the adjusting nut from 1/4 to 1/3 turn.
8. Position a **new** lock washer against the adjusting nut and apply a film of oil to the outer face of the lock washer.
9. Run the lock nut up against the lock washer and torque it to 100-150 ft-lbs.
10. Bend one tab of the lock washer over the adjusting nut.
11. Bend one tab of the lock washer (in the opposite direction) over the lock nut. **Use a blunt tool when bending the tabs to avoid making any chips which could cause serious bearing damage.**
12. Apply Silastic Sealer to the front and rear mounting faces of the splined drive plate.
13. Position the drive plate, install the retaining screws and torque them to specifications.
14. Install the retaining lock ring.
15. Position the outer hub cap and install the retaining screws and torque them to specifications.

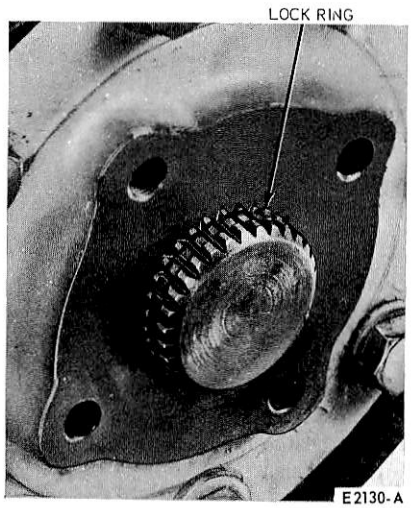

FIG. 4 Access to Lock Ring

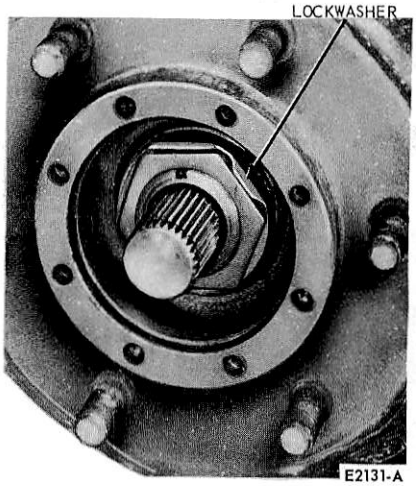

FIG. 5 Lock Nut and Washer Assembled

REMOVAL AND INSTALLATION

LOCK-OUT HUB (INTERNAL TYPE)

BRONCO, F-100, F-250 (3300 LB AXLE)

Removal

1. Remove the lock-out hub screws and washers (refer to Fig. 6).
2. Remove the hub ring and the knob. Wipe the parts clean.
3. Remove the internal snap ring from the groove in the hub.
4. Remove the cam body ring and clutch retainer (as an assembly) from the hub. Disassemble the parts.
5. Remove the axle shaft snap ring. It may be necessary to push inward on the gear and pull out on the axle with a bolt to make the snap ring removal easier.
6. Remove the drive gear and clutch gear. A slight rocking of the hub may make them slide out easier.
7. Remove the coil spring.
8. Remove the spring retainer ring.

Installation

1. Grease the inner hub with high speed grease (Fig. 7).
2. Install the spring retainer ring, positioned as shown with recessed undercut area going in first. Be sure it seats against the bearing (Fig. 8).
3. Install the coil spring with large end entering first (Fig. 9).
4. Install the axle shaft sleeve and ring and the inner clutch ring. Notice that the teeth are meshed together in a locked position for easy assembly. It may be necessary to rock the hub back and forth for spline alignment. Keep the two gears in locked position (Fig. 10).
5. Install the axle shaft snap ring. Push inward on gear, and if necessary, pull out axle shaft with bolt to allow clearance in groove for snap ring on the axle shaft. Be sure snap ring is fully seated in the smap ring groove of the shaft (Fig. 11).
6. Install the actuating cam body ring into the outer clutch retaining ring. Assemble into hub (Fig. 12).
7. Install the internal snap ring. Be sure snap ring is fully seated in the snap ring groove of the hub (Fig. 13).
8. Apply a small amount of Lubriplate Grease on the ears of the cam (Fig. 14).
9. Apply a small amount of Parker O-ring lube in groove of actuating knob before assembling outer O-ring (Fig. 14).
10. Assemble knob in hub ring and assemble to axle with knob in locked position. Assemble screws and washers alternately and evenly, making sure the retainer ring is not cocked in the hub.
11. Torque the six lock-out hub screws to 35 to 40 inch pounds. Be sure the washers are under each retaining screw. At first the lock-out hubs will probably seem hard to engage and disengage, but after mileage they should loosen up for easier operation. Either lock-out hub will fit either wheel.

Do not drive vehicle until you are sure that both lock-out hubs are engaged or disengaged. When vehicle is driven in water deep enough to cover the hubs, it is recommended that the internal parts be disassembled and inspected for possible water or dirt. After inspection, relubricate all parts before assembly to prevent rusting or corrosion.

LOCK-OUT HUB (EXTERNAL TYPE)

F-250 (3500 LB AXLE)

Removal

1. Remove the lock-out hub screws and washers (refer to Fig. 15), and discard them.

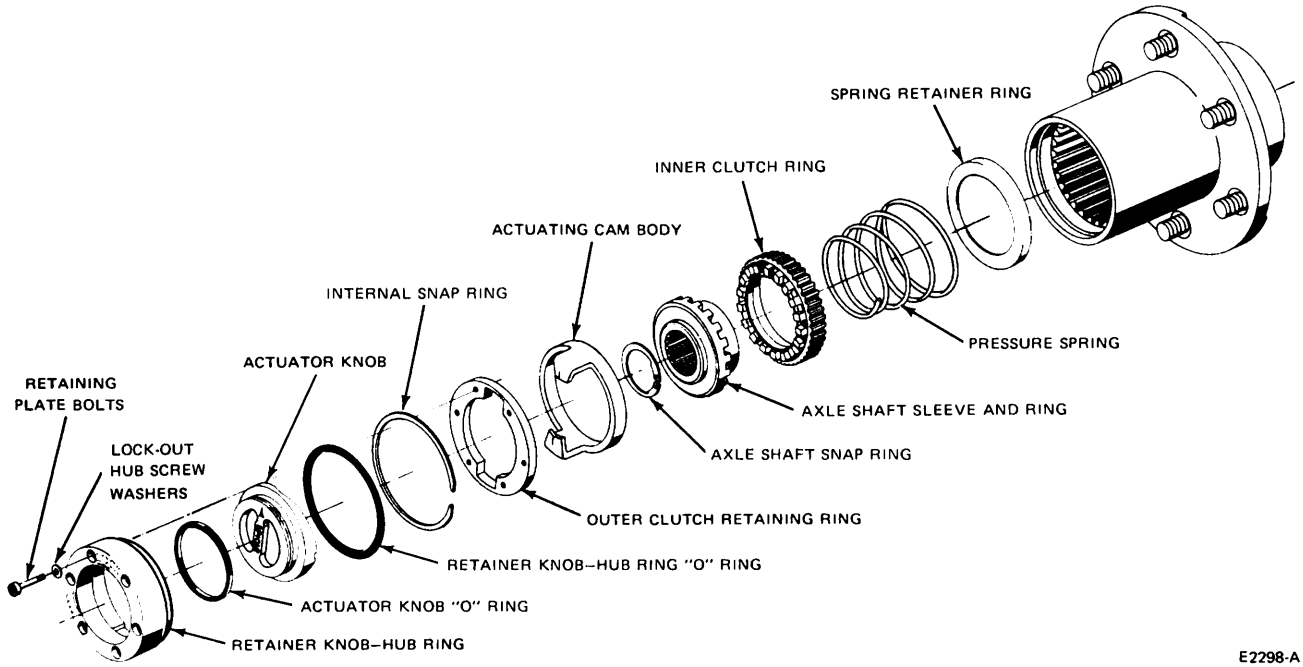

FIG. 6 Lock-Out Hub Internal Type—Bronco, F-250 (3300 Lb. Axles) Optional F-100

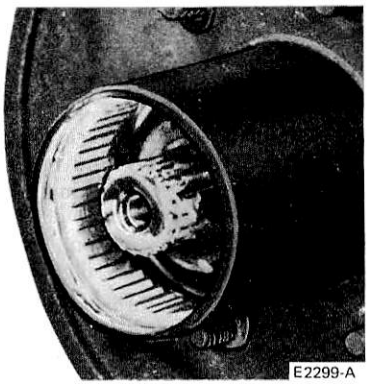
E2299-A

FIG. 7 Grease Application

2. Loosen the gear hub housing and slide away from the hub and drum assembly.
3. Remove the inner metal gasket (and discard it), the gear hub housing, and remove and discard the outer gasket. Wipe clean the exposed parts.
4. Remove the snap ring while holding pressure on the clutch gear.
5. Ease the clutch gear and pressure spring out of the assembly. The actuator knob should be in the lock position for this step.
6. Turn the actuator knob to the free position. With a drift, drive the lock pin out of the assembly.
7. Remove the actuating cam from the knob.
8. Remove the knob retainer snap ring and remove the knob from the knob retainer.
9. Using a capscrew pull out slightly on the axle shaft and remove the snap ring which retains the bushing and inner clutch gear assembly.
10. Remove these parts and disassemble. If wear or damage are evident on either the inner or outer clutch gear they should both be replaced as a set.

Installation

Before assembling lock-out hubs inspect the splines of the axle shaft making sure they are free of any possible nicks or burrs.

Threaded screw holes in the wheel hub should be cleaned before assembling new retainer screws. These holes can be cleaned by directing compressed air into the threaded holes.

1. Apply a small amount of MOLY XL hi-speed grease to the back face and the thrust face of the bushing, also to the splines of the inner clutch gear. Assemble inner clutch gear into bushing. Install the bushing and inner clutch gear onto axle shaft, making sure the splines of the inner clutch gear are aligned with the splines of the axle shaft, as shown (Fig. 16).
2. **Install a new snap ring. If necessary, pull out axle shaft with capscrew to allow clearance in groove for snap ring on axle shaft. Be sure snap ring is fully seated (Fig. 17).**
3. Apply a small amount of Parker O-ring lubricant on the actuator knob, making sure knob is completely lubricated in the area shown. Assemble O-ring onto actuating knob.
4. **Install the actuating knob into the knob retainer with arrow pointing to free position. Install the knob retainer snap ring. Spread snap ring with snap ring pliers. Use a small screwdriver to position the snap ring in the groove of the knob (Fig. 18).**
5. Install the actuating cam onto the knob, aligning ears of the cam with the slots of the retainer. Position parts on a small piece of wood as shown. Assemble the lock pin through the groove of the cam and holes in the actuating knob. Be sure ends of the pin are flush with the outside diameter of the cam (Fig. 19).
6. Turn actuator knob to **lock** position. Apply a small amount of MOLY XL hi-speed grease to both grooves of the cam as shown (Fig. 20).
7. Install the pressure spring and outer clutch gear. Compress the pressure spring by forcing down on clutch gear and assemble snap ring. Make sure snap ring is secure in the groove of the cam. Turn actuator knob to free position. Assemble six dished washers to the six retainer screws exactly as shown (Figs. 21 and 22).
8. Install 2 screws with correctly positioned washers into the knob retainer. This will properly line up the parts in steps 9 and 10. Apply a small amount of hi-speed grease to the outer spline and teeth of the outer clutch gear. Remove any excess lubricant from the gasket surface of the retainer.
9. Install a new outer retainer gasket. Assemble gear hub housing by aligning the splines of the housing with those of the outer clutch gear as shown. Assemble a new inner (metal) gasket on hub housing (Fig. 23).
10. Position the lock-out hub subassembly to axle assembly using the two new retainer screws as pilots to assure that the holes of the gasket are in alignment with the holes of the wheel hub. Tighten retainer screws to secure the lock-out hub. Turn actuator knob to lock position.
11. Install the remaining four new retainer screws with washers. Tighten screws evenly. Torque to 30-35 ft-lbs. The lock-out may be hard to engage and disengage, however after use, they should loosen up for easier operation. Either lock-out will fit either wheel.
12. **Do not drive vehicle until both lock-out hubs are either engaged or disengaged.**


E2300-A

FIG. 8 Spring Retainer Ring Installation


E2301-A

FIG. 9 Coil Spring Installation

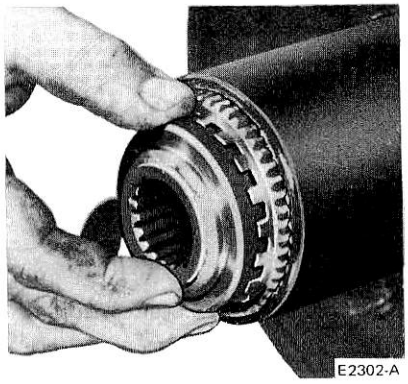

FIG. 10 Axle Shaft Sleeve and ring, and Inner Clutch Ring Installation

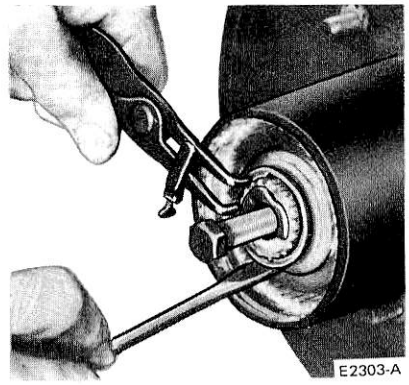

FIG. 11 Installing Axle Shaft Snap Ring

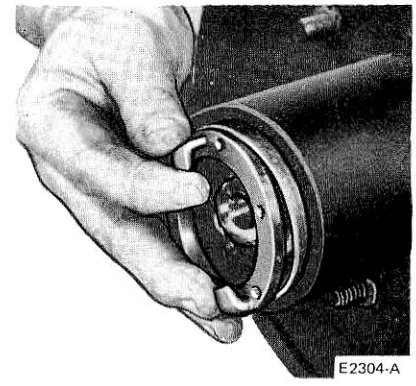

FIG. 12 Installing Cam Body Ring into the Clutch Retaining Ring

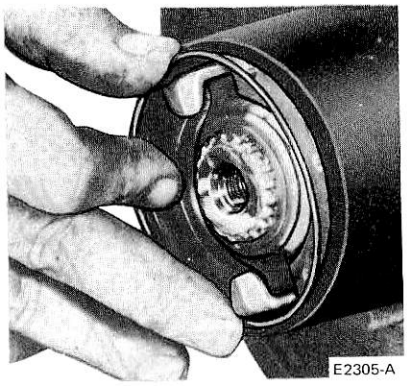

FIG. 13 Installing Internal Snap Ring

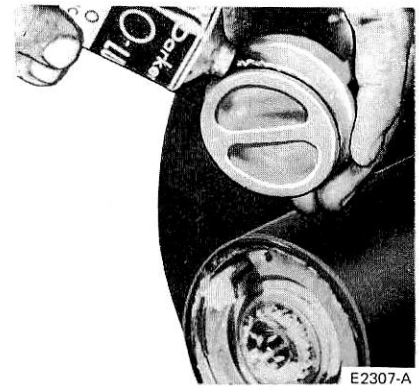

FIG. 14 Lubrication Areas

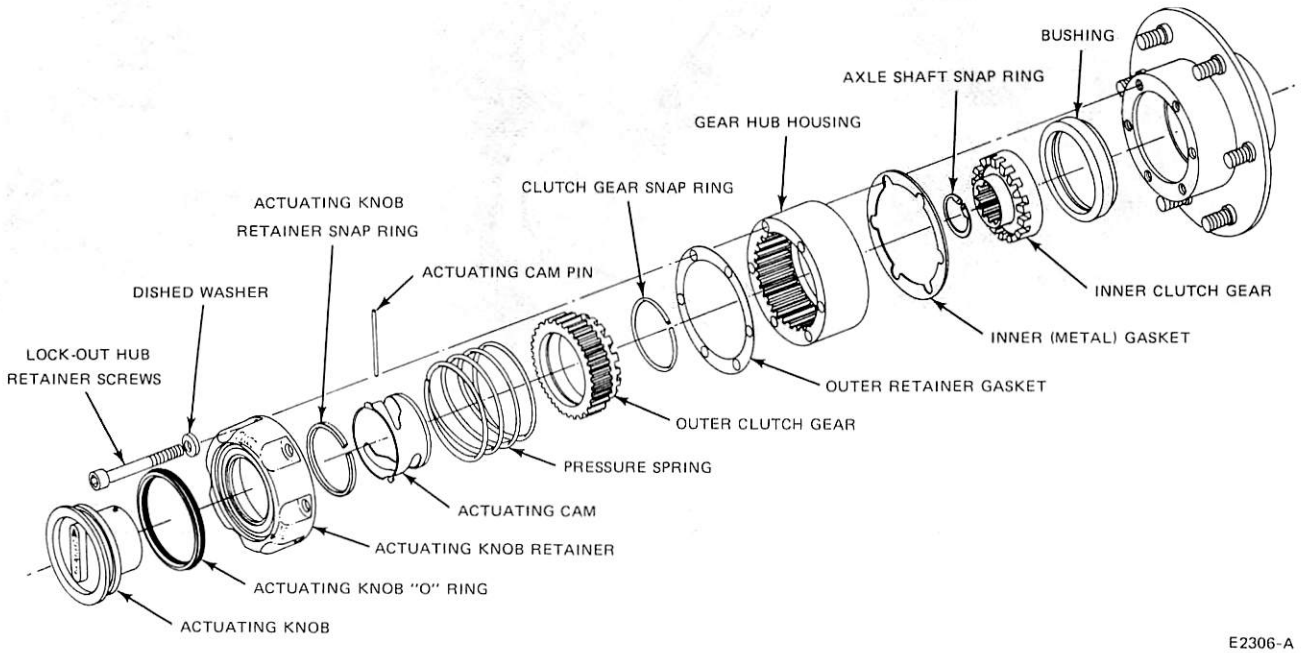

FIG. 15 Lock-Out Hub—External Type (F-250-3500 Lb. Axles)

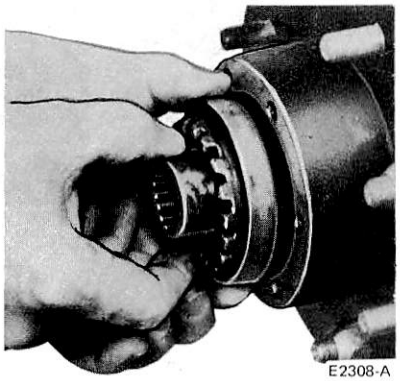

FIG. 16 Bushing and Inner Clutch Gear Installation

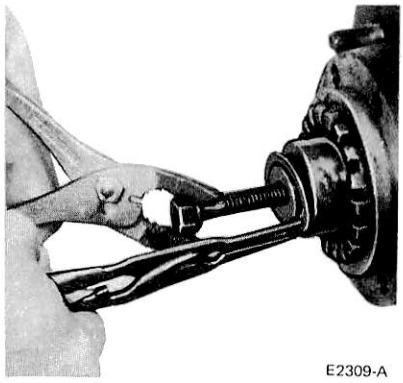

FIG. 17 Snap Ring Installation

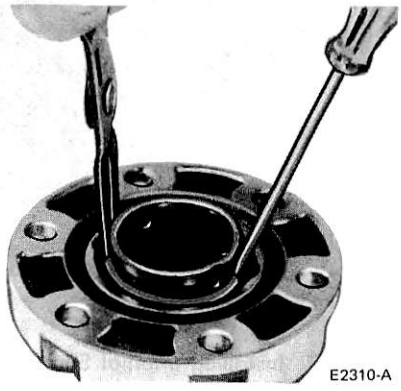

FIG. 18 Knob Retainer Snap Ring Installation

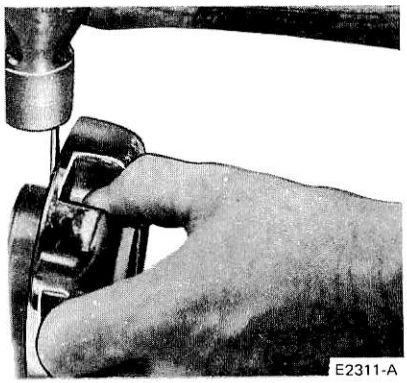

FIG. 19 Lock Pin Installation

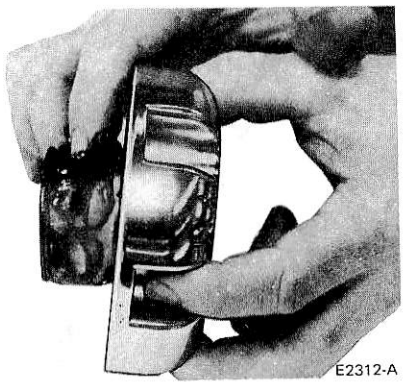

FIG. 20 Grease Application

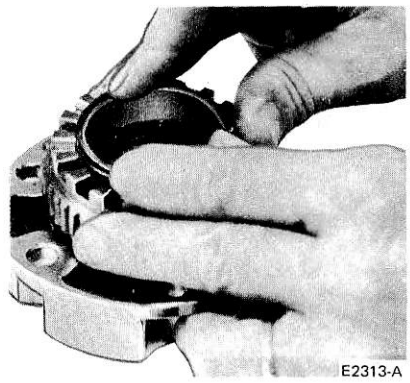

FIG. 21 Pressure Spring and Outer Clutch Gear Installation

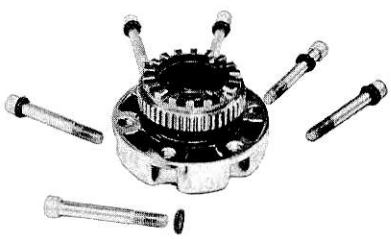

FIG. 22 Dished Washer Assembly Detail



FIG. 23 Assembly Positions of Gear Hub Housing and Gaskets

DISASSEMBLY AND ASSEMBLY

FRONT WHEEL GREASE SEAL AND BEARING REMOVAL AND INSTALLATION AND/OR REPACKING

Wheel bearing lubricant has been changed from sodium base grease to lithium base grease.

Sodium base grease is not compatible with lithium base grease and should not be intermixed. Therefore, do not lubricate front and/or rear wheel bearing without first ascertaining the type of original wheel bearing lubricant. Usage of incompatible bearing lubricants could result in premature lubricant breakdown.

If bearing adjustment will not eliminate looseness or rough and noisy operation, the hub and bearings should be cleaned, inspected, and repacked with specified wheel grease. If the bearing cups or the cone and roller assemblies are worn or damaged, they should be replaced.

BRONCO AND F-100

1. Raise the vehicle and install safety stands.
2. Back off the brake adjusting screw if necessary.
3. Remove the front hub grease cap and driving hub snap ring (Fig. 1).
4. Remove the splined driving hub and the pressure spring. This may require a slight prying assist (Fig. 2).
5. **Remove the wheel bearing lock nut, lock ring, and adjusting nut (Fig. 24), using Tool T59T-1197-B.**
6. Remove the hub and drum assembly. The outer wheel bearing and spring retainer will slide out as the hub is removed (Fig. 25).
7. Carefully drive the inner bearing cone and grease seal out of the hub

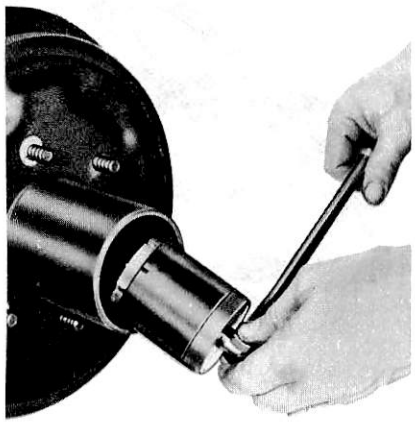

F 1814-A

FIG. 24 Lock nut, Lock Ring and Adjusting Nut Removal



F 1815-A

FIG. 25 Hub, Drum and Outer Bearing Removal



F 1816-A

FIG. 26 Inner Bearing Cone and Grease Seal Removal

(Fig. 26) using T69L-1102-A.

8. Inspect the bearing cups for pits or cracks. If necessary, remove them with a drift (Fig. 27). **If new cups are installed, install new bearings.** The bearings should be lubricated with C1AZ-19590-B wheel bearing grease. Clean all old grease from the hub. Pack the cones and rollers. If a bearing packer is not available, work as much lubricant as possible between the rollers and the cages.
9. Position the inner bearing cone and roller in the inner cup and install the grease retainer.
10. Carefully position the hub and drum assembly on the spindle.
11. Install the outer bearing cone and roller and the adjusting nut.
12. Using Tool T59T-1197-B and a torque wrench, tighten the bearing adjusting nut to 50 ft-lbs while rotating the wheel back and forth to seat the bearings.
13. Back off the adjusting nut approximately 90 degrees.
14. Assemble the lock ring by turning the nut to the nearest notch where the dowel pin will enter.
15. Install the outer lock nut and torque to 80-100 ft-lbs. Final end play of the wheel on the spindle should be 0.001 to 0.010 inches.
16. Install the pressure spring and driving hub snap ring and after applying non-hardening sealer to the seating edge of the grease cap, and install the grease cap. If equipped with free-running lock-out hubs, refer to Removal and Installation for the type of hub involved.
17. Adjust the brake if it was backed off.
18. Remove the safety stands and lower the vehicle.

F-250

1. Raise the vehicle and install safety stands.
2. Back off the brake adjusting screw, if necessary. Remove the wheel cover, if installed.
3. Remove the front hub grease cap. Remove the driving hub retaining snap ring (Fig. 2, Part 11-02) and slide the splined driving hub from between the axle shaft and the wheel hub. Remove the driving hub spacer. If equipped with free-running lock-out hubs, refer to Removal and Installation for the type of hub involved.
4. **With Tool T59T-1197-B, remove the lock nut, washer, and wheel bearing adjusting nut (Fig. 3) from the spindle. Remove the wheel, hub and drum as an assembly. The wheel outer bearing will be forced off the spindle at the same time. Protect the spindle and inner bearing cone from dirt.**
5. Remove the grease retainer and the inner bearing cone and roller assembly from the hub with Tool 1175AB, and T50T-100-A. Discard the grease retainer.
6. Clean the lubricant off the inner and outer bearing cups with solvent and inspect the cups for scratches, pits, excessive wear, and other damage. If the cups are worn or damaged, remove them with a drift.
7. Thoroughly clean the inner and outer bearing cones and rollers with solvent, and dry them thoroughly. **Do not spin the bearings with compressed air.**

Inspect the cone and roller assemblies for wear or damage, and replace them if necessary. The cone and roller assemblies and the bearing cups should be replaced as a unit if damage to either is encountered.

8. Thoroughly clean the spindle and the inside of the hub with solvent to remove all old lubricant.

Cover the spindle with a clean cloth, and brush all loose dust and dirt from the brake assembly. **To prevent getting dirt on the spindle, carefully remove the cloth from the spindle.**

9. If the inner bearing cup was removed, install the cup or a new cup in the hub. **Be sure to seat the cup properly in the hub.**
10. Install the outer bearing cup in the hub with a suitable tool. **Be sure the cup is properly seated in the hub.**
11. Pack the inside of the hub with CIAZ-19590-B lubricant. Add lubricant to the hub only until the grease is flush with the inside diameter of both bearing cups.
12. **All old grease should be completely cleaned from the bearings before repacking them with new grease. Pack the bearing cone and roller assemblies with C1AZ-19590-B lubricant. A bearing packer is desirable for this operation. If a packer is not available, work as much lubricant as possible between the rollers and cages. Lubricate the cone surfaces with grease.**
13. Place the inner bearing cone and roller assembly in the inner cup, and install the new grease retainer. **Be sure that the retainer is properly seated.** Coat the grease retainer sealing lip with a liberal amount of CIAZ-19590-B lubricant.
14. Install the wheel, hub, and drum assembly on the wheel spindle. **Keep the hub centered on the spindle to**

prevent damage to the grease retainer or the spindle threads.

15. Install the wheel outer bearing cone and adjusting nut. Adjust the front wheel bearings as detailed in Adjustments under Front Wheel Bearing Adjustment.

F-600

1. Remove the wheel and tire from the hub and drum. Remove the outer hub cap retaining screws, and remove the cap.
2. Remove the retaining lock ring (Fig. 3).
3. Remove the retaining screws and remove the splined drive plate.
4. Bend the tab of the lock washer away from the lock nut and remove the lock nut (Fig. 4).
5. Remove the lock washer and **discard it.**
6. Remove the adjusting nut.
7. Remove the hub and drum carefully from the spindle. Cover the spindle to protect it from dirt and foreign material. If the drum is difficult to remove, back off the brake adjustment to provide clearance.
8. Carefully remove the inner bearing and seal.
9. Clean the bearing recess and using a suitable solvent, clean the bearings. **Do not spin dry with compressed air.** Repack the bearings with grease after drying thoroughly. Inspect the bearing cups. If cracked, pitted, or otherwise damaged, they should be replaced. If they are replaced, the bearings should also be replaced.
10. The cups can be removed using a hammer and a drift.
11. Install the new cups using Tool T68T-1174-AB for the inner bearing cup and Tool T68T-1173-AB for the outer bearing cup.
12. **Install the inner bearing, lubricate and install the grease seal using Tool T68T-1173-AC.**
13. Position the hub and drum on the spindle.
14. Install the outer bearing and the adjusting nut. Install the wheel and tire on the hub and drum.
15. While rotating the wheel back and forth to correctly seat the bearings, torque the adjusting nut to 50 ft-lbs.
16. Back off the adjusting nut from 1/4 to 1/3 turn.
17. Position a **new** lock washer against the adjusting nut and apply a film of oil to the outer face of the lock washer.
18. Run the lock nut up against the lock washer and torque it to 100-150 ft-lbs.
19. Bend one tab of the lock washer over the adjusting nut.
20. Bend one tab of the lock washer (in the opposite direction) over the lock nut. **Use a blunt tool when bending the tabs to avoid making any chips which could cause serious bearing damage.**
21. Apply Silastic Sealer to the front and rear mounting faces of the splined drive plate.
22. Position the drive plate, install the retaining screws and torque them to specifications.
23. Install the retaining lock ring.
24. Position the outer hub cap and install the retaining screws.



FIG. 27 Bearing Cup Removal

PART 11-14 Wheel Hubs and Bearings— Rear (Full Floating Axle)

Applies to All 250 and Higher Series Vehicles

COMPONENT INDEX	Page	COMPONENT INDEX	Page
DESCRIPTION	14-01	DISASSEMBLY AND ASSEMBLY	14-02

DESCRIPTION

On all the full-floating axle wheel hubs with tapered roller bearings, a seal is installed behind the inner bearing to keep the wheel bearing lubricant from the brake lining and brake drum (Figs. 1 and 2).

The wheel bearings are packed with wheel bearing lubricant (C1AZ-19590-B) to provide initial lubrication until axle lubricant flows into the wheel hubs and bearings during vehicle operation. On these axles the wheel hub is vented through the axle housing vent. The seal assembly (500-9000 Series) mounts on the wheel hub and seals on a wear sleeve (wiper) which is installed on the axle housing tube (Fig. 2).

The wear sleeves (500-9000 Series) must be installed squarely on the axle housing using the appropriate tools (Fig. 3). **Do not use heat on the wear**

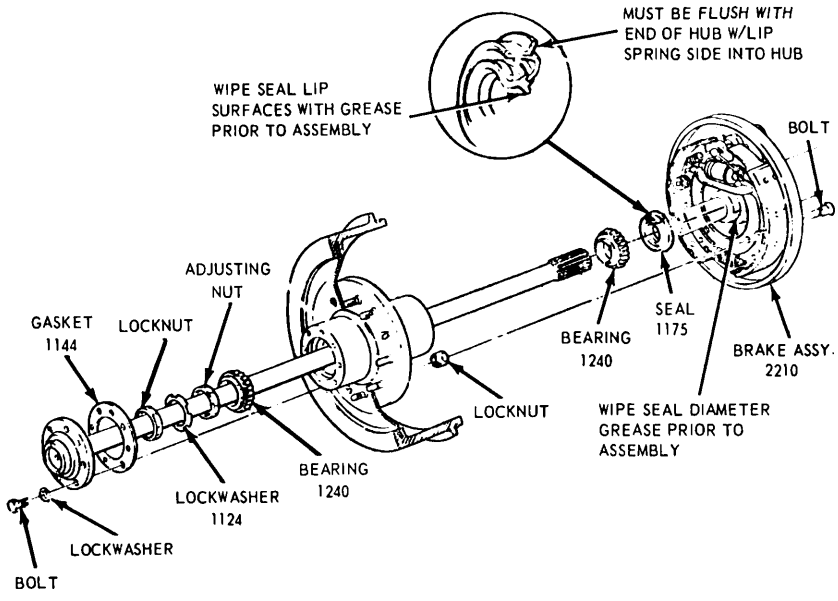

FIG. 1 Rear Wheel Hub—Dana Full-Floating Axle—Models 60, 60-3E, and 70

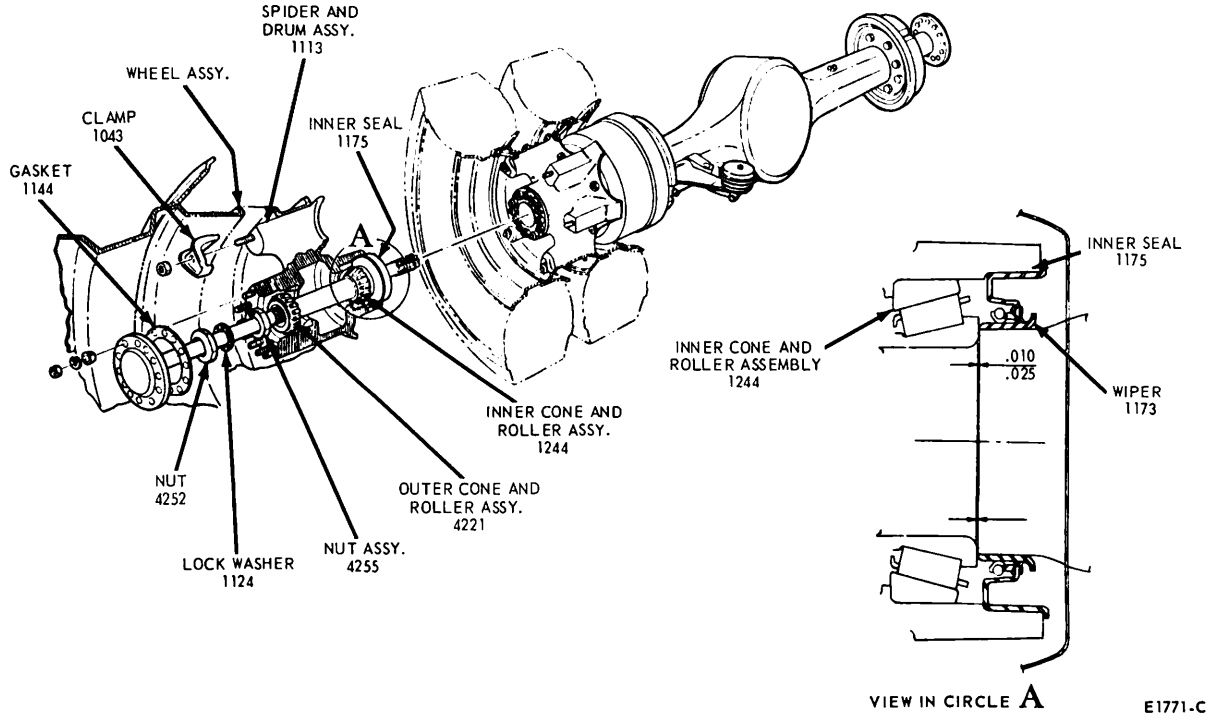

FIG. 2 Typical Rear Wheel Hub—Full-Floating Axle—500-9000 Series

sleeves to facilitate installation. Use the proper tool as shown in Fig. 3. The sleeves are designed with flanges to eliminate the possibility of installing the sleeves backwards. Although preservative has been applied to the wear sleeve prior to packaging, a light oil (SAE-10 or its equivalent) should be applied to the wear sleeve to facilitate assembly of the sleeve to the axle housing. After installation of the wear sleeve, the clearance between the end of the wear sleeve and inner wheel bearing shoulder should be 0.010 to 0.025 inches (Fig. 2).

The seal assembly is to be installed in the wheel hub. The garter spring should be checked to assure the spring is in the spring groove behind the primary seal lip after the seal is in position. Before installing the wheel, apply grease (C1AZ-19590-B) between the lips of the seal.

The wheel bearing must be thoroughly cleaned and repacked with lithium base grease (C1AZ-19590-B) before installing the wheel assembly.

To prevent damage to the primary and secondary lips of the seal assembly, a locator sleeve or tool should be used to guide the hub and drum onto the axle. A new seal assembly must be installed whenever a wheel is removed.

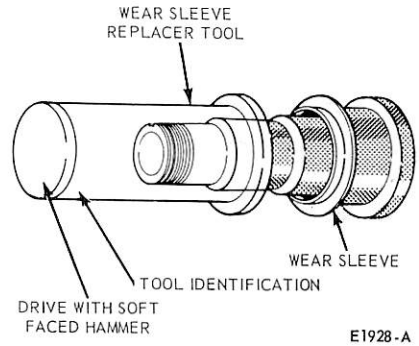

FIG. 3 Tool Application of Wear Sleeve (Wiper) Installation

DISASSEMBLY AND ASSEMBLY

BEARINGS, CUPS AND SEALS

F-250, (4 X 2 AND 4 X 4), F-350, E-300, P-350, AND P-400 SERIES

1. Set the parking brake and loosen the axle shaft retaining bolts (Fig. 1).
2. Raise the rear wheels off the floor and place work stands under the rear axle housing so that the axle is parallel with the floor. Back off the rear brake adjustment, if necessary.
3. Remove the axle shaft retaining bolts and discard them.
4. Remove the axle shaft and discard the gasket.
5. Remove the wheel lock nut, lock washer and wheel bearing adjustment nut using Tool T70T-4252-D, or T70T-4252-E. **Under no condition should the lock nut be removed with a chisel.** Discard the lock washer.
6. With the type of wheel jack shown in Fig. 4, raise the wheel to the point that all weight is removed from the wheel bearings. Remove the outer bearing cone. Now, pull the wheel assembly **straight** out and away from the axle.
7. Thoroughly clean the spindle of the axle housing.
8. With a brass drift, and care to prevent damaging the bearing cage, drive the inner bearing cone and inner seal out of the wheel hub.
9. Clean all old grease and axle lubricant out of the wheel hub.
10. Inspect the bearing races and rollers for pitting, galling or erratic wear patterns. Inspect the rollers for end wear. Replace the bearings if worn or damaged.
11. If the bearing cups are to be replaced, drive them out with a brass drift. Install the new cups with a tool such as OTC 27797.
12. Check for proper seating of the new bearing cups by trying to insert a 0.0015 inch feeler gauge between the cups and the wheel hub.
13. Pack each bearing cone and roller assembly with a bearing packing tool, using C1AZ-19590-B (ESA-MIC75-B) long life lubricant.
14. Place the inner bearing cone and roller assembly in the wheel hub. Install a new hub inner Seal using Tool T73T-1190-A.
15. Position the wheel assembly at the axle housing. Wrap the threads of the spindle with electricians tape. Carefully slide the wheel assembly **straight (to avoid seal damage) onto the axle housing spindle.** Remove the electricians tape.
16. Install the outer wheel bearing and start the bearing adjuster nut. Remove the wheel jack.
17. Torque the adjusting nut to 50-80 ft-lbs while rotating the wheel. Back off (loosen) the adjusting nut 3/8 of a turn using Tool T70T-4252-D or T70T-4252-E.
18. Install a new lock washer coated with axle lube and smooth side out. Install the lock nut (Tool T70T-4252-D or T70T-4252-E). Torque the lock nut to 90-110 ft-lbs. With the lock nut at proper torque, the wheel assembly must rotate freely and with an end play of 0.001-0.010 inch. **Be sure of this specification. Check it closely with suitable dial indicator set up. Do not preload the bearings.**

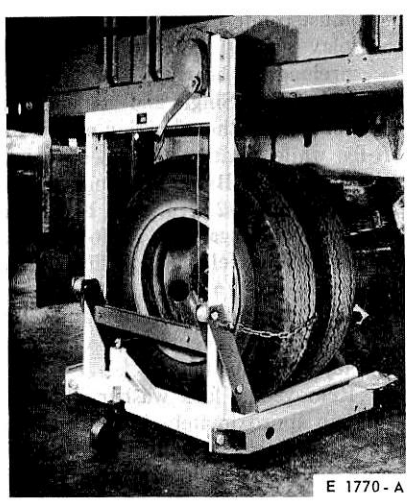

FIG. 4 Typical Wheel Jack

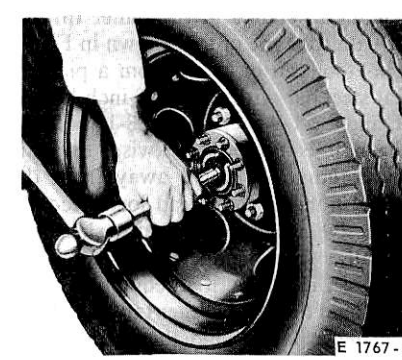

FIG. 5 Axle Shaft Removal—Tapered Dowels

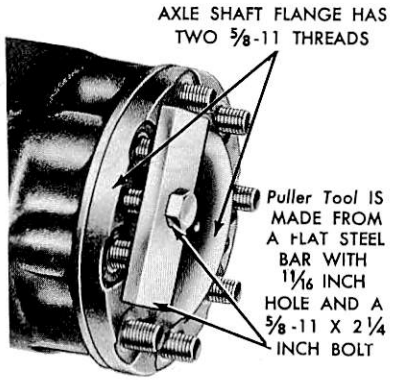

FIG. 6 Axle Shaft Puller

19. With a satisfactory end play and freely turning wheel bend two lock washer tabs inward over flats of the adjusting nut and two tabs outward over flats of the lock nut.
20. **Install the axle shaft, new axle flange gasket, lock washers and new axle shaft retaining bolts. Torque the lock bolts to 40-50 ft-lbs.**
21. Adjust the brakes. Then, remove the work stands and lower the vehicle.

500-9000 SERIES

1. Release the parking brake and loosen the axle shaft stud nuts.
2. **Raise the rear wheels off the floor and place the work stands under the rear axle housing so that the axle is parallel with the floor. Back off the rear brake adjustment.**
3. Remove the axle shaft stud nuts.
4. If tapered dowels are installed in the axle shaft flange, place a drift in the center of the flange and strike it sharply to loosen the dowels (Fig. 5). Remove the axle shaft.

On axles where tapered dowels are not used, two puller threads (5/8-11) are provided in the axle shaft flange. These axle shafts may be pulled with a slide hammer installed in the puller threads or with the type of tool shown in Fig. 6. This tool can be made from a piece of flat steel bar with an 11/16 inch hole in it, and a 2 1/4 inch long 5/8-11 bolt. As the bolt is turned clockwise, the axle shaft flange is pulled away from the wheel hub. If the thread load becomes excessive when pulling an axle shaft, install a second puller on the opposite side of the flange, if so equipped.

5. Bend the lock washer tab away from the lock nut, and then remove the lock nut, lock washer, and the adjusting nut.
6. With the type of wheel jack shown in Fig. 4, raise the wheel to the point **that all wheel weight is removed from the wheel bearings. Remove the outer bearing cone. Now, pull the wheel straight out and away from the axle.**
7. Inspect the inner seal wear sleeve on the axle housing spindle for signs of wear or pitting. If necessary to replace the wear sleeve, use a hammer and a cold chisel. Being careful not to damage the seal journal of the axle housing, make two evenly spaced indentations in the wear sleeve surface and slip the wear sleeve off the axle housing. Thoroughly clean the spindle of the axle housing. Then, position a new **proper size** wear sleeve squarely to the axle housing spindle and, with the use of proper driving tool (Fig. 3), and a soft faced hammer, drive the wear sleeve on the axle housing spindle until it seats evenly against the shoulder of the seal journal of the spindle. A light coating of S.A.E. 10 oil should be applied to the inner surface of the wear sleeve to facilitate assembly of the wear sleeve to axle housing.
8. With a piece of hard wood which will just clear the outer bearing cup, or a brass drift, carefully drive the inner bearing cone and inner seal out of the wheel hub.
9. Clean all the old grease or axle lubricant out of the wheel hub.
10. Inspect the bearing races and rollers for pitting, galling, and erratic wear patterns. Inspect the rollers for end wear (Fig. 7).
11. If the bearing cups are to be replaced, drive them out with a drift. Install the new cups with the tool shown in Fig. 8 or press them in.
12. Check for proper seating of the new bearing cups by trying to insert a 0.0015 inch feeler gauge between the cup and the wheel hub.
13. Pack each bearing cone and roller assembly with a bearing packer tool.

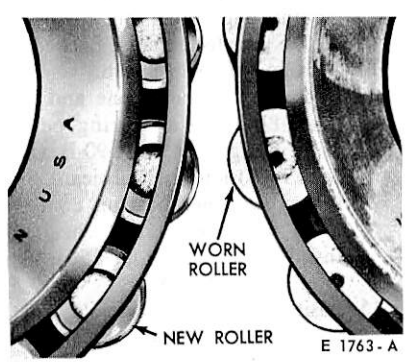

FIG. 7 Roller Bearing End Wear

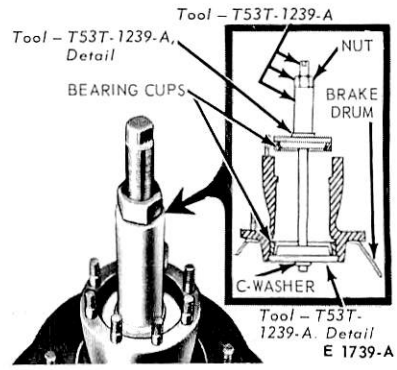

FIG. 8 Installing Bearing Cup

14. Place the inner bearing cone and roller assembly in the wheel hub, and then install a new hub inner seal.
15. Apply a light film of CIAZ-19590-B (ESA-MIC75-B) to the axle spindle; then position a seal protector tool over the axle spindle threads.
16. Position the wheel assembly at the axle housing. Carefully slide the wheel assembly **straight (to avoid seal damage) onto the axle housing spindle. Then, remove the seal protector from the axle spindle.**
17. Install the outer wheel bearing and start the bearing adjuster nut. Remove the wheel jack.
18. **11000-17500 lb. Single Rear Axles and 30000 lb. Tandem Rear Axles:** Torque the adjusting nut to 140 ft-lbs while rotating the wheel to seat the bearings. Back off (loosen) the adjusting nut 1/2 turn; then, torque the adjusting nut again to 50 ft-lbs while rotating the wheel. Back off (loosen) the adjusting nut 1/3 turn. Install the lock washer. Back off the adjusting nut, if necessary to align the lock washer hole with the dowel pin. Install the lock nut and tighten to 125 ft-lbs. The wheel assembly must rotate freely and with an end play of 0.001 to 0.010 inch. **Do not preload the bearings.**

All Other Single and tandem Rear Axles: Torque the adjusting nut to 185 ft-lbs while rotating the wheel to seat the bearings. Back off (loosen) the adjusting nut 1/2 turn; then, torque the adjusting nut again to 50 ft-lbs while rotating the wheel. Back off (loosen) the adjusting nut 1/6 turn.

19. Install a new lock washer and select a tab which is centered on one of the adjusting nut flats.

Remove the lock washer and bend this tab approximately 45 degrees such that the final bend will fit flush on the nut. Reinstall the lock washer. Install the lock nut and torque it to 125 ft-lbs (Fig. 9). With the lock nut at proper torque, the wheel assembly must rotate

freely and with an end play of 0.001-0.010 inch. Do not preload the bearings. Bend the pre-bent lock washer tab flush against the flat of the adjusting nut. Bend another tab flush on the lock nut. Do not use a chisel or other sharp tool to bend the tabs as metal chips could work into the bearings.

20. Install the axle shaft, a new gasket, lock washers and axle shaft retaining nuts. Torque the nuts to specifications.
21. Adjust the brakes. Then, remove the work stands and lower the vehicle.

MEDIUM, HEAVY AND EXTRA HEAVY VEHICLES (OIL LUBRICATION)

Stemco Seals available as regular production options, provide sealing where oil is used for bearing lubrication. The tools required for Stemco Seal Installation are only available from the Stemco warehouse. Refer to specifications for the tooling required. Fig. 10 illustrates a rear wheel Stemco Seal installation.

Rear Hub Seal Installation

1. Thoroughly clean the axle spindle.
2. If the spindle shoulder is scored or pitted apply a thin coat of Permatex No. 2.
3. Position the axle ring and drive it into position flush with the inner bearing shoulder using the correct tool. Procedures vary with different applications. Refer to the instructions packed with each seal set.
4. Remove all burrs and protrusions from the oil seal area of the wheel hub.
5. Pack the inner bearing cone with CIAZ-19590-B (ESA-MIC75-B) and position it in the bearing cup.
6. Position the oil seal at the mouth of the bore and drive it squarely into position using the correct tool. The seal must be evenly bottomed.
7. Take special care not to damage the oil seal while installing the wheel.
8. Fill the wheel cavity with oil before installing the outer bearing.
9. Pack the outer bearing with M1C75-B and install it and then adjust the bearings as outlined in step 18, under 500-900 series.
10. Inspect axle shaft gasket mating surfaces for nicks, burrs, and dirt; then install the axle shaft.
11. Check the rear axle lube level and add oil if required.

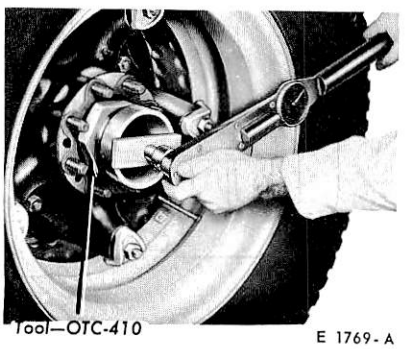

FIG. 9 Insalling Lock Nut

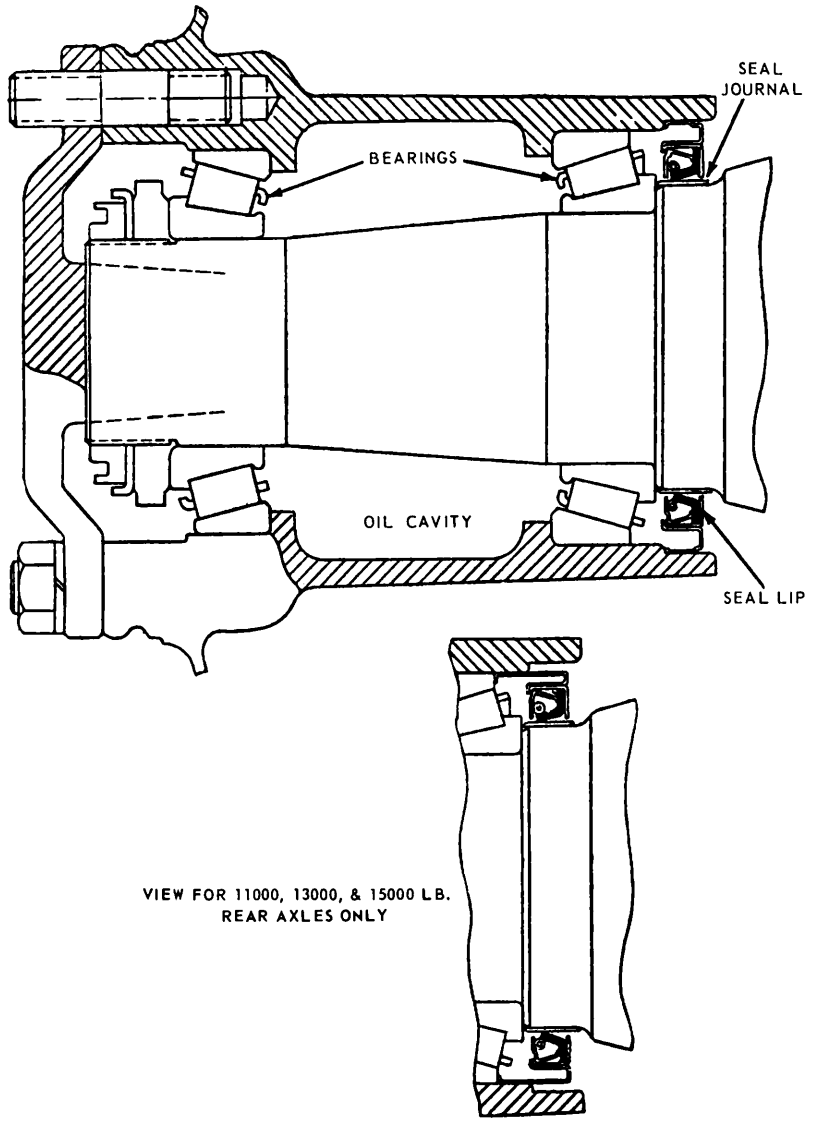

FIG. 10 Rear Seal Installation (Stemco)

SPECIFICATIONS

SPECIAL SERVICE TOOLS STEMCO①

Ford Seal Kit Part No.	Stemco Tool No.	Ford Seal Kit Part Name
D0HZ-1175-A	5008–5308	Kit – Oil Seal Inner Rear Wheel
D0HZ-1175-B	5002–5011	
D0HZ-1175-C	5074–5383	
D0HZ-1175-D	5072–5397	
D0HZ-1175-E	5071–5391	
D0HZ-1175-F	5076–5399	

① Kits on this page consist of one axle ring and one seal for just one wheel.

CE2330-A

Brakes

GROUP 12

Page

PART 12-01
General Hydraulic Brake Service 12-01-01
PART 12-02
Drum Brakes – Single Cylinder, Dual Piston 12-02-01
PART 12-05
Drum Brakes – Single Cylinder, Single Piston 12-05-01
PART 12-08
Drum Brakes – Dual Cylinders, Dual Pistons 12-08-01
PART 12-09
Drum Brakes – Dual Cylinders, Single Piston (Wagner) 12-09-01
PART 12-24
Disc Brakes – Sliding and Floating Caliper 12-24-01
PART 12-40
General Air Brake Service 12-40-01
PART 12-43
Air Brakes – Single Wedge (Rockwell) 12-43-01
PART 12-44
Air Brakes – Single Wedge (Bendix) 12-44-01
PART 12-46
Air Brakes – Double Wedge (Bendix) 12-46-01
PART 12-48
Air Brakes – Cam Type 12-48-01
PART 12-50
Vacuum Brake Booster – Single Diaphragm, Dash-Mounted (Bendix) 12-50-01
PART 12-52
Vacuum Brake Booster – Tandem Diaphragm, Dash-Mounted (Bendix) 12-52-01
PART 12-53
Vacuum Brake Booster – Single Diaphragm, Frame-Mounted (Bendix) 12-53-01

Page

PART 12-54
Vacuum Brake Booster – Tandem Diaphragm, Frame-Mounted (Bendix) 12-54-01
PART 12-58
Vacuum Brake Booster – Single Diaphragm, Dash-Mounted (Midland) 12-58-01
PART 12-60
Vacuum Brake Booster – Single Diaphragm, Frame-Mounted (Midland) 12-60-01
PART 12-70
Parking Brake – Cable Actuated, Rear Wheels 12-70-01
PART 12-77
Parking Brake – External Band, Transmission Mounted 12-77-01
PART 12-79
Parking Brake – Internal Shoe, Transmission Mounted 12-79-01
PART 12-81
Parking Brake – Internal Shoe, Transfer Case Mounted 12-81-01
PART 12-83
Parking Brake – Maxibrake, Rear Wheels, Air 12-83-01
PART 12-84
Parking Brake – MGM Stopgard-Rear Wheels, Air. 12-84-01
PART 12-85
Parking Brake – MGM Shortstop, Rear Wheels, Air 12-85-01
PART 12-86
Parking Brake – MGM Low Profile, Rear Wheels, Air 12-86-01
PART 12-87
Parking Brake – Anchor Lok, Rear Wheels, Air 12-87-01

PART 12-01 General Hydraulic Brake Service

COMPONENT INDEX Applies to Models as Indicated	All Models	Econoline & Bronco	P-350-400	P-500	B-500-750, 6000-7000	F-100-350	F-500-750, L-800-900	L-8000-9000	LT-800-900, 8000,9000	C-550-900, 6000-7000	C-900,C-8000 CT800-900	LN-500-900, 8000-9000	LN-800-900,8000-9000 LNT Series W & WT Series
BRAKE BOOSTER Push Rod Adjustment		N/A	01-09	01-09	01-09	01-09	01-09	N/A	01-09	01-09	N/A	01-09	N/A
Testing		01-08	01-08	01-08	01-08	01-08	01-08	N/A	01-08	01-08	N/A	01-08	N/A
BRAKE CYLINDER Cleaning and Inspection		01-14	01-14	01-14	01-14	01-14	01-14	N/A	01-14	01-14	N/A	01-14	N/A
BRAKE DRUM Cleaning and Inspection	01-14												
Refinishing	01-13												
Removal and Installation	01-12												
BRAKE PEDAL Adjustment	01-09												
BRAKE SHOE AND LINING Overhaul	01-13												
BRAKE SYSTEM Description	01-03												
Hydraulic Line Repair		01-11	01-11	01-11	01-11	01-11	01-11	N/A	01-11	01-11	N/A	01-11	N/A
Manual Bleeding		01-09	01-09	01-09	01-09	01-09	01-09	N/A	01-09	01-09	N/A	01-09	N/A
Power Brake Function Test		01-08	01-08	01-08	01-08	01-08	01-08	N/A	01-08	01-08	N/A	01-08	N/A
Preliminary Checks		01-08	01-08	01-08	01-08	01-08	01-08	N/A	01-08	01-08	N/A	01-08	N/A
Pressure Bleeding		01-10	01-10	01-10	01-10	01-10	01-10	N/A	01-10	01-10	N/A	01-10	N/A
Warning Light Test		01-08	01-08	01-08	01-08	01-08	01-08	N/A	01-08	01-08	N/A	01-08	N/A
DISC BRAKES Cleaning and Inspection		N/A	N/A	N/A	N/A	01-13	N/A	N/A	N/A	N/A	N/A	N/A	N/A
MASTER CYLINDER Cleaning and Inspection		01-14	01-14	01-14	01-14	01-14	01-14	N/A	01-14	01-14	N/A	01-14	N/A
PRESSURE DIFFERENTIAL VALVE Centralizing		01-11	01-11	01-11	01-11	01-11	01-11	N/A	01-11	01-11	N/A	01-11	N/A

A page number indicates that the item is for the vehicle(s) listed at the head of the column.
N/A indicates that the item is not applicable to the vehicle(s) listed.

DESCRIPTION

Hydraulically operated service brakes are standard equipment on all 100 through 800 Series and on some 900 Series trucks.

Automatic brake shoe adjusters are used on all 100 thru 900 Series trucks with hydraulic brakes.

A dual-master cylinder brake system (Figs. 1 through 4) is used as standard equipment on F-100 through F-350, E-100 through E-300, Bronco, and P-350-400 vehicles. The dual master cylinder is also used on F-500, L-900, LN-600-750, F-6000-7000, LN-6000-7000, C-6000-7000 and B-500-750 Series vehicles equipped with split hydraulic brakes.

Front Disc Brakes are used on F-100 through F-350 4 x 2 trucks.

The standard hydraulic brake system on some vehicles may be assisted by a vacuum booster installed as either standard or optional equipment. Service information on the vacuum booster units is given in Parts 12-50, 12-52, 12-53, 12-54, and 12-60.

The dual, master cylinder contains a double hydraulic cylinder with two fluid reservoirs, two hydraulic pistons (a primary and secondary) and two residual check valves, located in the outlet ports (Fig. 5).

On all 100 through 400 Series Vehicles, the master cylinder front (secondary) outlet port is connected to the rear (secondary) hydraulic circuit and the rear (primary) brake outlet port (nearest the dash panel) is connected to the primary (front) hydraulic circuit.

On all 100 through 400 Series vehicles, the dual master cylinder primary (rear) piston actuates the front wheel brakes. The secondary (front) piston actuates the rear wheel brakes.

The master cylinder primary and secondary pistons function together.

On 500-900 Series trucks with a split hydraulic system, each of the two lines from the dual-master cylinder actuates one brake cylinder at each wheel (front and rear) for vehicles with 15 by 3-inch front brakes. On vehicles with 14 by 2 1/2-inch front duo-servo brakes, the single brake cylinders in both front wheels are actuated by one line that also operates one cylinder at each rear wheel. The line from the other master cylinder outlet port actuates the remaining brake wheel cylinder at each rear wheel.

Brake lines (tubes) are connected from the brake master cylinder primary and secondary system outlet ports to the pressure differential valve assembly (Figs. 5 and 6). The electrical brake warning switch, and the brake lines (tubes) leading from the differential valve assembly to the front and rear wheel brake cylinders are also shown in Figs. 6 and 7.

SINGLE MASTER CYLINDER BRAKE SYSTEM—500-900 SERIES

The standard hydraulic brake system C-Series models is equipped with a single master cylinder and internal expanding shoe drum brakes at all wheels. On all models except P-500, the drum brakes are self adjusting.

The standard hydraulic brake system on some trucks is assisted by a vacuum booster which may be installed as either standard or optional equipment.

DRUM BRAKES

All Ford truck models equipped with hydraulic brakes have internal expanding shoes, except the F-100 through F-350 series which are equipped with front disc brakes. The different types of brake assemblies vary in the way that the shoes are anchored, in the number of wheel cylinders used at each wheel, and in the number of pistons in the wheel cylinder.

In the single anchor type, both brake shoes are mounted to the same anchor and are actuated by one wheel cylinder. In the duo-servo, single anchor brake, the wheel cylinder has two pistons. One piston exerts force against the upper end of the primary shoe; the other piston exerts force against the upper end of the secondary shoe (Figs. 7 and 8).

In the double anchor type, each shoe is mounted to a separate anchor. The shoes are actuated by one duo-servo (two piston) cylinder at the upper end.

The front wheels of some trucks are equipped with two cylinders, each having one piston. The piston in one cylinder exerts force against one end of one shoe; the piston in the other cylinder exerts force against the opposite end of the other shoe.

The rear wheels of some vehicles are equipped with two cylinders, each having two pistons (four pistons total). Each of the four pistons exert force against one end of one shoe (Fig. 9).

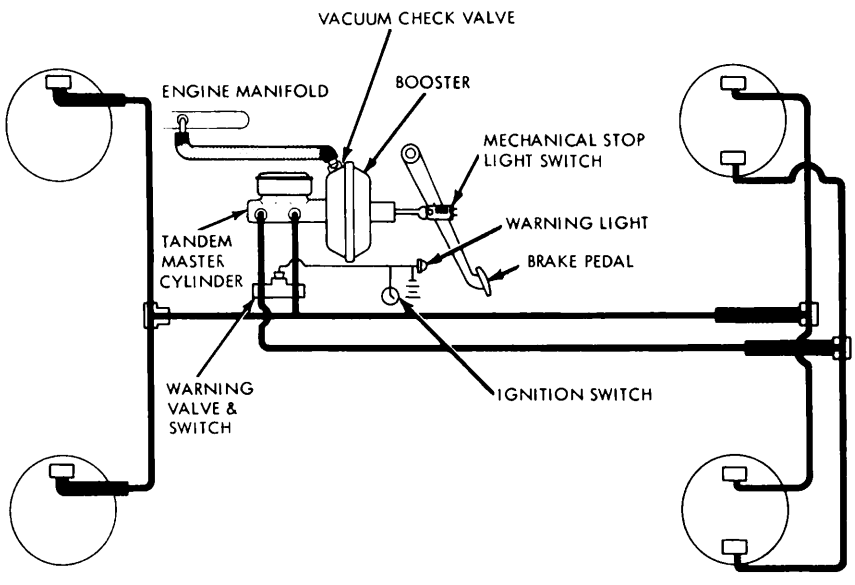

FIG. 1 Split Hydraulic—Brake System with Dash-Mounted Booster

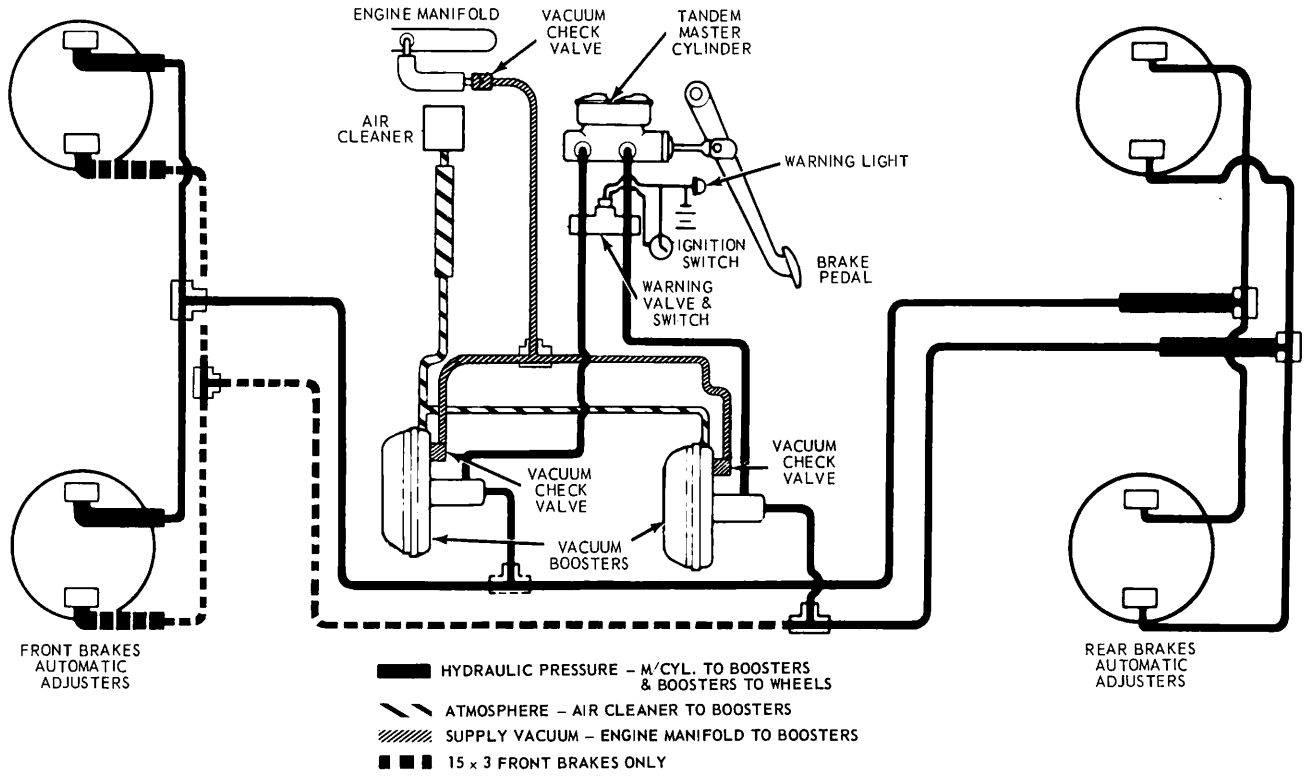

FIG. 2 Split Hydraulic—Brake System with Frame-Mounted Boosters—600-900 Series

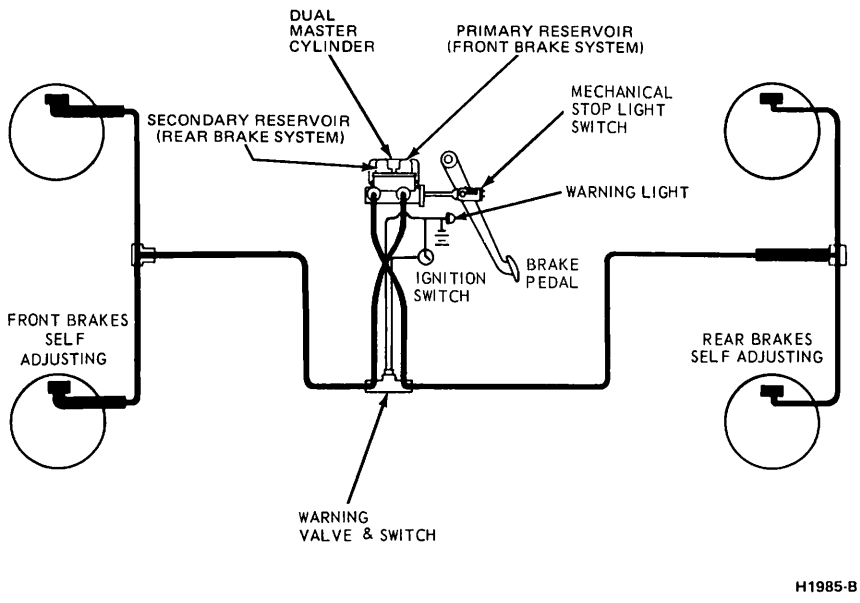

FIG. 3 Typical Hydraulic Brake System—Light Truck

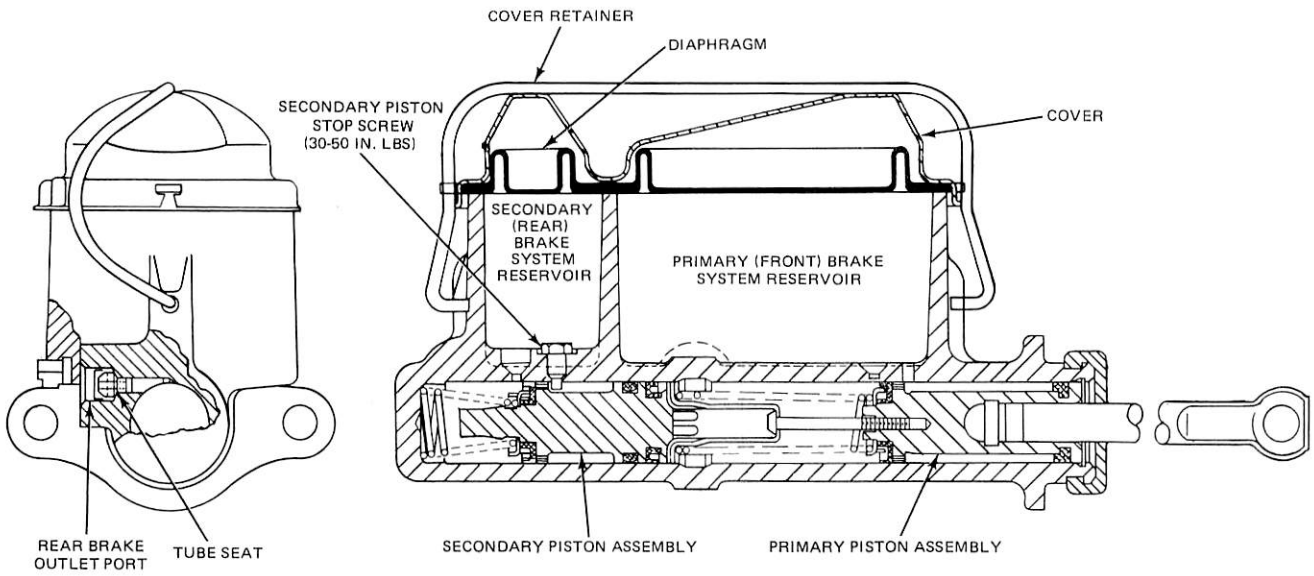

FIG. 4 Dual Master Cylinder—Typical (Light Truck)

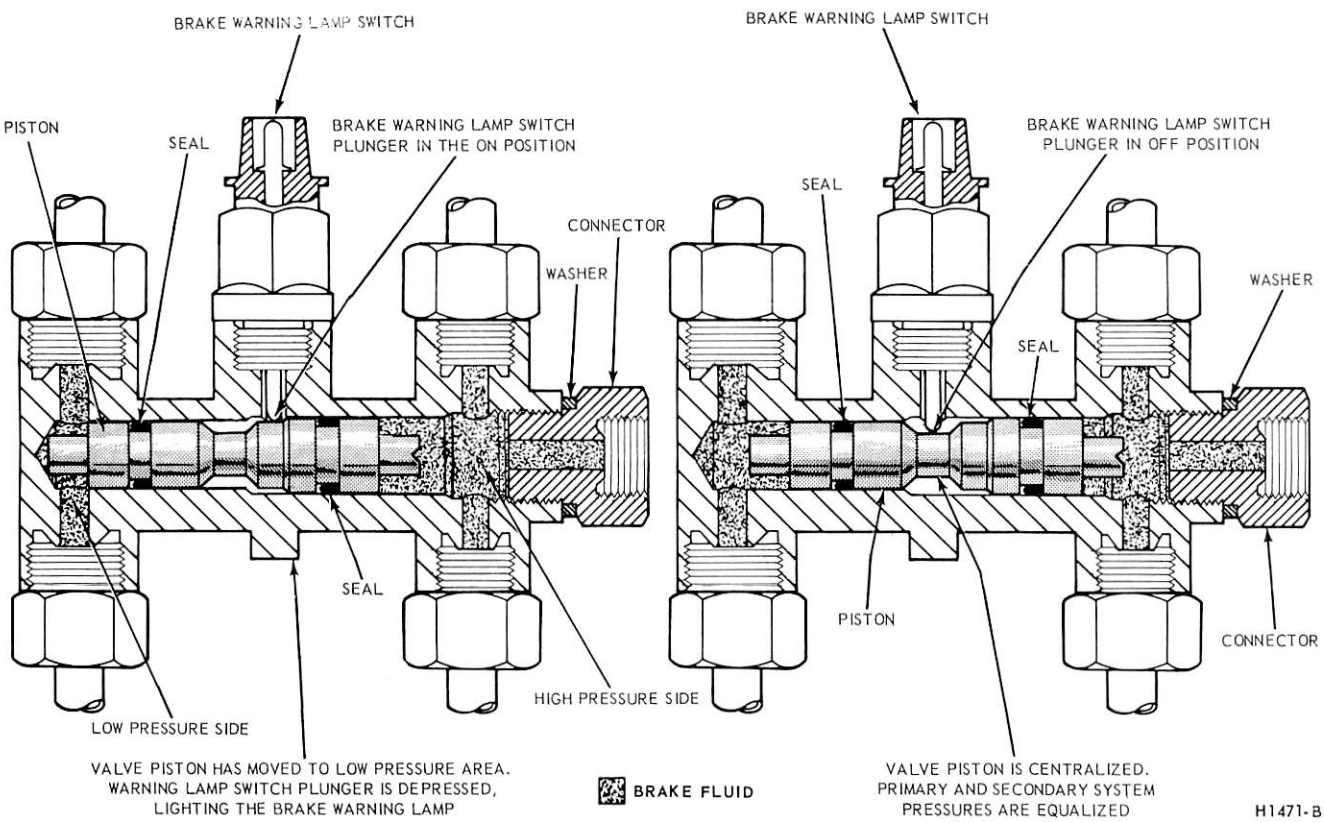

FIG. 5 Differential Valve System—F-100-F-250 4 x 4, E-100-E-300, U-100, F-250 H.D.-F-350 w/Disc Brakes and P-350-P-500

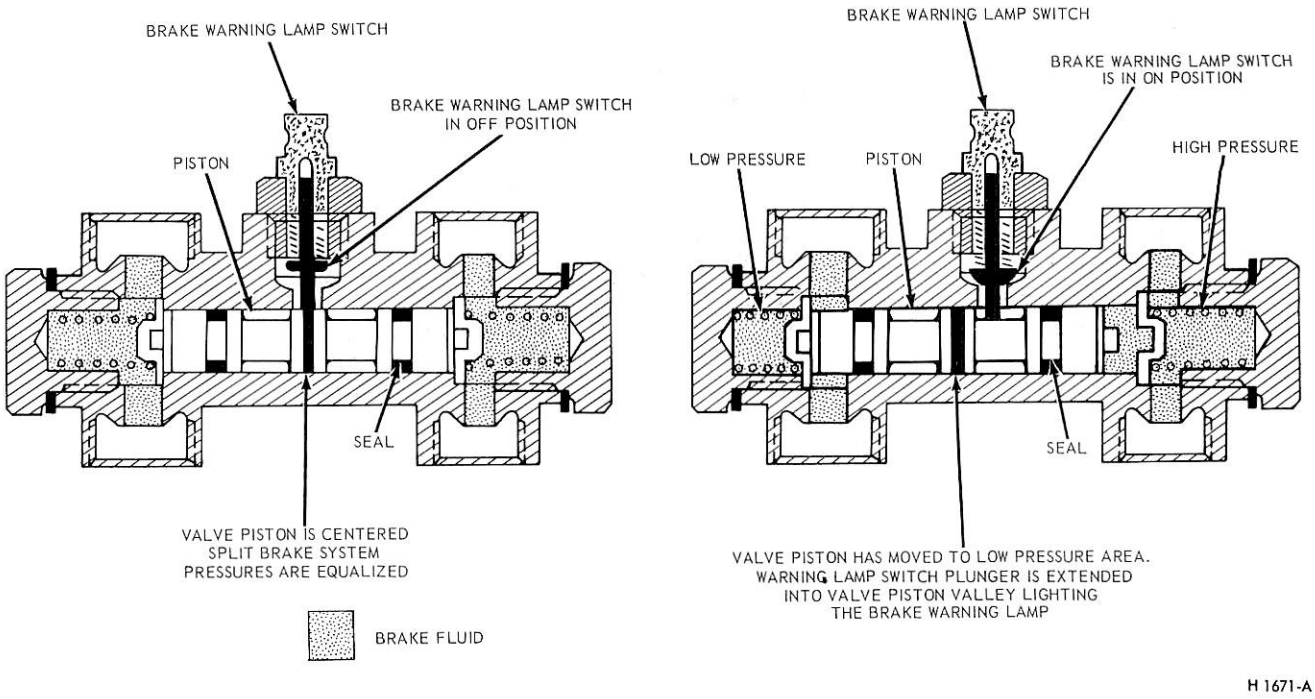

FIG. 6 Differential Valve System—500-900 Series with Split Hydraulic Brakes

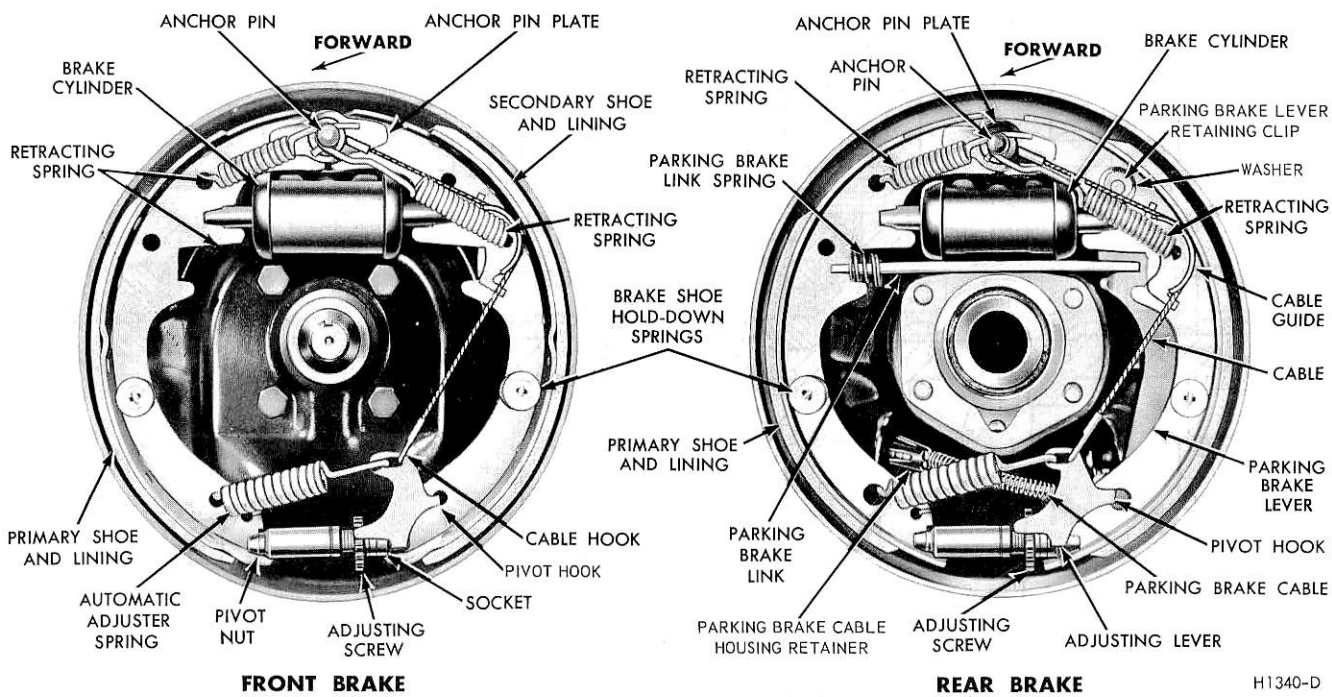

FIG. 7 Self Adjusting Brake Assemblies—F-100-250 4 x 4, E-100-200, and Bronco

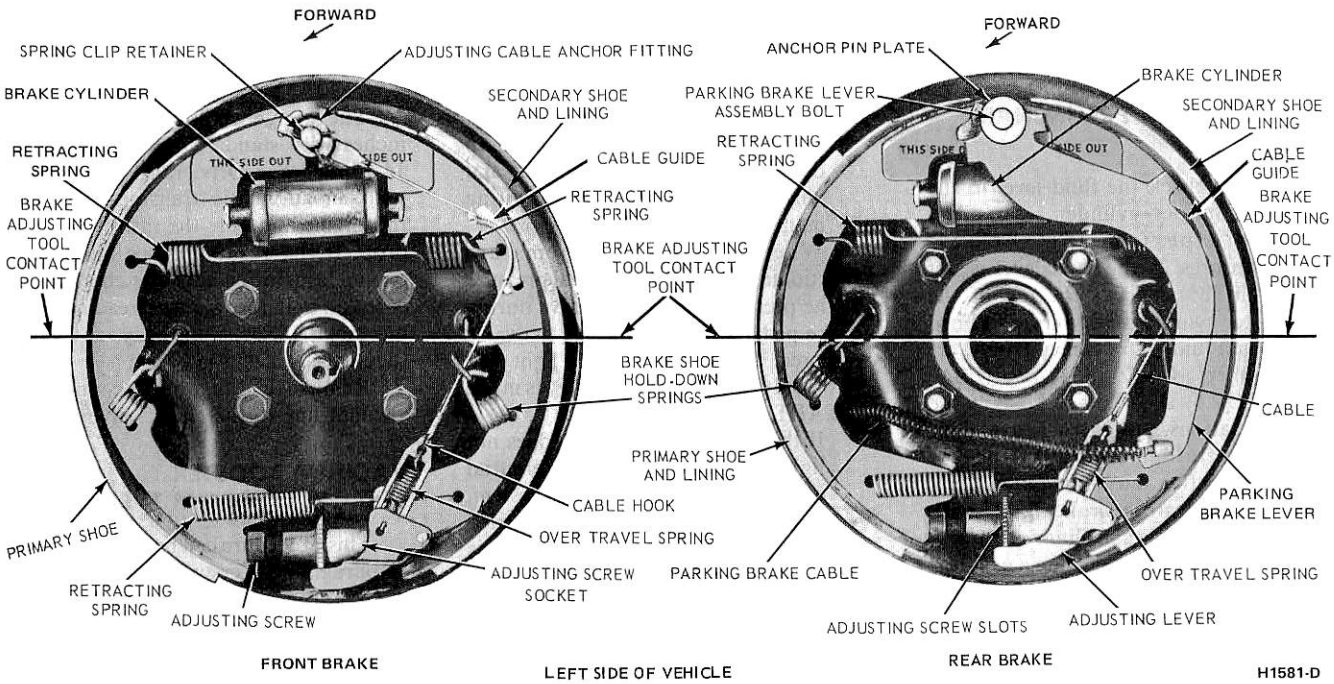

FIG. 8 Self Adjusting Brake Assemblies—F-250 (Heavy Duty)-350 Rear, E-300, and P-350-400 Front and Rear

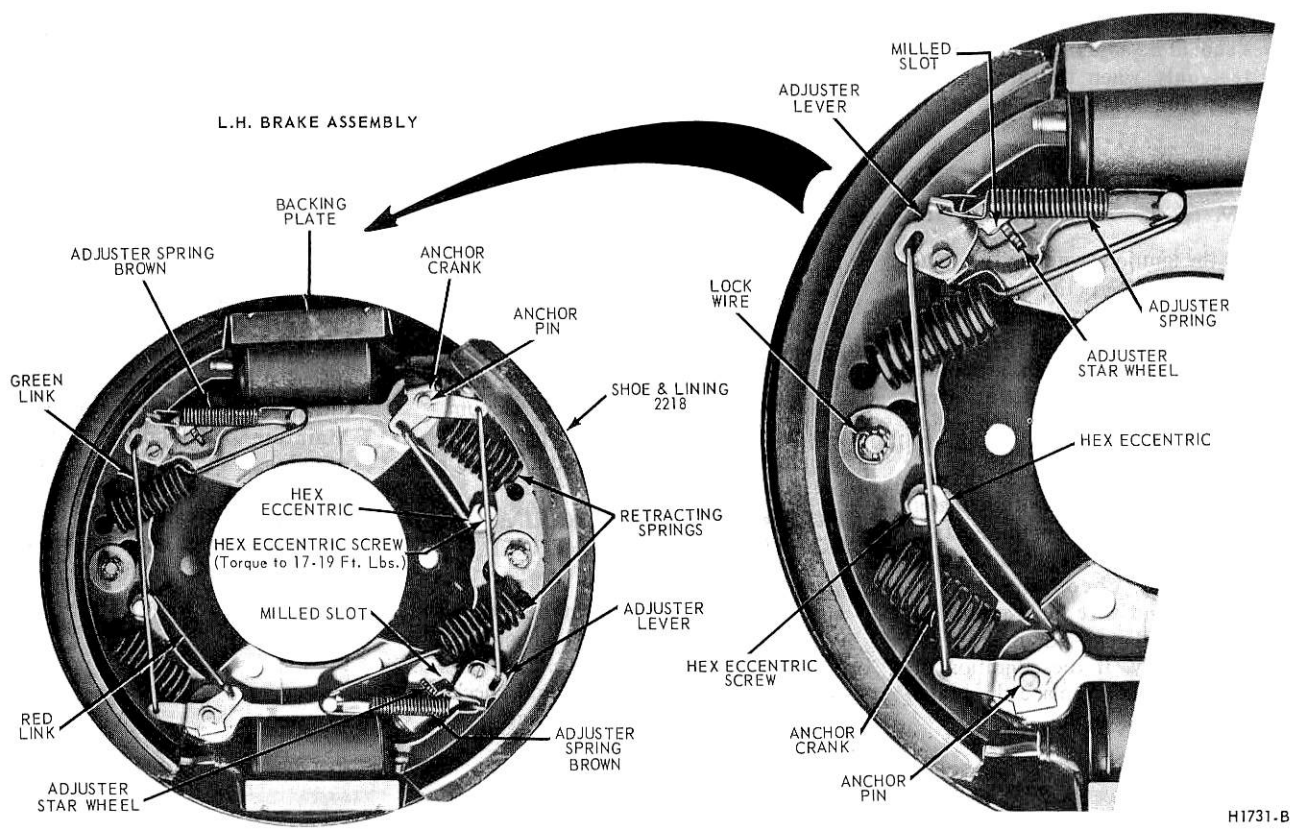

FIG. 9 Two-Cylinder Brake Assembly—Rear (Wagner)

TESTING

BRAKE SYSTEM PRELIMINARY CHECKS

1. Always check the fluid level in the brake master cylinder reservoir(s) before performing the test procedures. If the fluid level is not within 1/4 inch of the top of the master cylinder reservoirs, add Ford Brake Fluid-Extra Heavy Duty-Part Number C6AZ-19542-A (ESA-M6C25-A) for all brake applications.**The extra heavy duty brake fluid is colored blue for identification purposes. Do not mix low temperature brake fluids with the specified brake fluid.**

Push the brake pedal down as far as it will go. If the pedal travels more than halfway between the released position and the floor, adjust the brakes. If the vehicle is equipped with automatic brake adjusters, several sharp brake applications while backing up may be necessary to adjust the brakes.

Road test the vehicle and apply the brakes at a speed of about 20 mph to see if the vehicle stops evenly. If not, the brakes should be adjusted. Perform the road test only when the brakes will apply and the vehicle can be safely stopped.

DUAL BRAKE WARNING LIGHT SYSTEM TESTS

1. Turn the ignition switch to the ACC or ON position. If the light on the brake warning lamp remains on, the condition may be caused by a shorted or broken switch, grounded switch wires or the differential pressure valve is not centered. Centralize the differential pressure valve as outlined under Hydraulic System Bleeding and Centralizing of the Differential Valve in this Section of the manual. If the warning light remains on, check the switch connector and wire for a grounded condition and repair or replace the wire assembly. If the condition of the wire is good, replace the brake warning lamp switch.
2. Turn the ignition switch to the start position. If the brake warning lamp does not light, check the light and wiring and replace or repair wiring as necessary.

When both brake systems are functioning normally, the equal pressure at the pressure differential valve during brake pedal application keeps the valve centered. The brake warning light will be on only when the ignition key is in the **START** position.

3. If the brake warning lamp does not light when a pressure differential condition exists in the brake system, the warning lamp may be burned out, the warning lamp switch is inoperative or the switch to lamp wiring has an open circuit. Check the bulb and replace it, if required. Check the switch to lamp wires for an open circuit and repair or replace them, if required. If the warning lamp still does not light, replace the switch.

POWER BRAKE FUNCTION TEST

With the engine stopped, eliminate all vacuum from the system by pumping the brake pedal several times. Then push the pedal down as far as it will go, and note the effort required to hold it in this position. If the pedal gradually moves downward under this pressure, the hydraulic system is leaking and should be checked by a hydraulic pressure test.

With the brake pedal still pushed down, start the engine. If the vacuum system is operating properly, the pedal will move downward. If the pedal position does not change, the vacuum system is not operating properly and should be checked by a vacuum test.

FRAME-MOUNTED VACUUM BOOSTER CHECK VALVE TEST

Disconnect the line from the bottom of the vacuum check valve, and connect a vacuum gauge to the valve. Start the engine, run it at idle speed, and check the reading on the vacuum gauge.

The gauge should register 17-19 inches with standard transmission and 14-15 inches in Drive range if equipped with an automatic transmission. Stop the engine and note the rate of vacuum drop. If the vacuum drops more than one inch in 15 seconds, the check valve is leaking. If the vacuum reading does not reach 18, or is unsteady, an engine tune-up is necessary.

Remove the gauge and reconnect the vacuum line to the check valve.

VACUUM BOOSTER TEST—DIAPHRAGM TYPE

This procedure can be used to test all diaphragm boosters which are equipped with a pipe thread outlet on the atmosphere portion of the diaphragm chamber.

Remove the pipe plug from the rear half of the booster chamber, and install a vacuum gauge. Start the engine and run it at idle speed. The gauge should register 18-21 inches of vacuum.

1. With the engine running, depress the brake pedal with enough pressure to show a zero reading on the vacuum gauge. Hold the pedal in the applied position for one minute. Any downward movement of the pedal during this time indicates a brake fluid leak. Any kickback (upward movement) of the pedal indicates brake fluid is leaking past the hydraulic piston check valve.
2. **With the engine running, push down on the brake pedal with sufficient pressure to show a zero reading on the vacuum gauge. Hold the pedal down, and shut the engine off. Maintain pedal position for one minute. A kickback of the pedal indicates a vacuum leak in the vacuum check valve, in the vacuum line connections, or in the booster.**

ADJUSTMENTS

AIR CHECK BOOSTER PUSH ROD ADJUSTMENT—MIDLAND ROSS BOOSTER (DASH-MOUNTED)

Whenever the master cylinder or booster has been repaired or replaced, the brake system must be checked for proper return flow of hydraulic brake fluid from the wheel cylinders to the reservoir of the master cylinder. This check will assure that the brake booster to master cylinder push rod is properly adjusted to allow the master cylinder compensating valve to open when the brake pedal is in the fully released position.

The air check is made after the brake booster and master cylinder has been installed and before the master cylinder hydraulic line connection is made and the reservoir is filled with brake fluid.

1. Connect the brake vacuum line to the vacuum booster, if required. Start the engine.
2. Carefully position the nozzle of an air hose to the master cylinder discharge port. Place a hand over the master cylinder reservoir and apply air pressure through the air hose nozzle.

Be careful not to allow dirt to enter into the system.

If free passage air pressure is felt on the hand located over the master cylinder reservoir, the brake booster push rod is properly adjusted.

If no air pressure is felt on the hand located over the reservoir, the master cylinder must be removed and the push rod length shortened. To shorten the push rod length, turn the acorn-type screw on the brake booster push rod inward, one turn at a time, until the air check shows the brake master cylinder compensating valve is open.

BRAKE PEDAL ADJUSTMENT

On dual-brake master cylinder or brake mounted vacuum booster equipped vehicles, the brake systems are designed to permit full stroke of the master cylinder when the brake pedal is fully depressed. A brake pedal clearance adjustment is not required.

In order to release the brakes, fluid in a hydraulic brake system must flow back to the master cylinder when pedal pressure is released. A port is provided in the master cylinder to allow this flow, but the piston must move back far enough to expose the return port. To be sure that this will always happen, free-travel is built into the pedal linkage on standard and on frame-mounted booster systems. This free-travel prevents the piston from becoming trapped in a partially released position. Pedal free travel is not always perceptible in dash-mounted booster systems, however, because the operating clearance for the piston is adjusted at the booster push-rod, rather than the pedal linkage. (Refer to Parts 12-50, 12-52 and 12-58 for instructions on dash-mounted booster push rod adjustments).

FRONT DISC BRAKES F-250 AND F-350

The front disc brake assembly is designed so that it is inherently self-adjusting. Refer to Part 12-24.

HYDRAULIC SYSTEM BLEEDING

When any part of the hydraulic system has been disconnected for repair or replacement, air may get into the lines and cause spongy pedal action. This requires the bleeding of the hydraulic system after it has been properly connected to be sure all air is expelled from the brake cylinders and lines. The hydraulic system can be bled manually or with pressure bleeding equipment.

When bleeding the brake system, bleed one brake cylinder at a time, beginning at the cylinder with the longest hydraulic line first. If the brake assembly is equipped with two cylinders, always bleed the upper cylinder first. Keep the master cylinder reservoir filled with the specified C6AZ-19542-A extra heavy duty brake fluid during the bleeding operation. Never use brake fluid which has been drained from the hydraulic system.

The procedure for bleeding the single master cylinder on a C-Series truck is presented separately from the standard hydraulic system bleeding procedures.

If the hydraulic system is equipped with a vacuum booster, bleed the hydraulic section of the booster before bleeding the rest of the system. On vehicles equipped with a frame-mounted booster and split hydraulic brake system, bleed the two booster slave cylinders first then again after bleeding all the wheel cylinders. The bleeding operation must be done with the engine off and with no vacuum in the system. If the brake pedal is still spongy after the first bleeding, repeat the bleeding procedure.

To bleed the hydraulic section of a vacuum booster, follow steps 1 through 4 of the manual bleeding procedure, attaching the drain tube to the bleeder screw at the end plate of the booster (or the bleeder screw nearest the power chamber). Repeat this procedure at the other bleeder screw if the booster is so equipped.

On dual-brake system hydraulic master cylinder equipped vehicles, it will be necessary to centralize the pressure differential valve after a brake hydraulic system malfunction has been corrected and the hydraulic system has been bled. Before any attempt is made to bleed the split hydraulic brake system on 500-950 Series trucks, remove the brake light warning switch from the pressure differential valve. Failure to remove the switch from the valve could result in possible damage to the switch assembly.

It is necessary to depress the bleeder button on the metering valve when bleeding the front brakes. This is to allow the brake fluid to reach the caliper assemblies. This operation is particularly important if pressure bleeding equipment is being used.

MANUAL BLEEDING—CONVENTIONAL, SINGLE-BRAKE SYSTEM HYDRAULIC MASTER CYLINDER

1. Attach a rubber drain tube to the bleeder screw of the brake wheel cylinder. The end of the tube should fit snugly around the bleeder screw.
2. Submerge the free end of the tube in a container partially filled with clean brake fluid. Loosen the bleeder screw.
3. Push the brake pedal down slowly by hand, allowing it to return slowly to the fully-released position. Repeat this operation until air bubbles cease to appear at the submerged end of the tube.
4. When the fluid is completely free of air bubbles, close the bleeder screw and remove the drain tube.
5. Repeat this procedure at each brake cylinder. Refill the master cylinder reservoir after each brake cylinder is bled **with C6AZ-19542-A extra heavy duty brake fluid and** when the bleeding operation is completed.

MANUAL BLEEDING—DUAL-BRAKE SYSTEM HYDRAULIC MASTER CYLINDER

The primary and secondary

hydraulic brake systems are individual systems and are bled separately. Bleed the longest line first on the individual system being serviced. **During the complete bleeding operation, DO NOT allow the reservoir to run dry. Keep the master cylinder reservoirs filled with the specified brake fluid. Never use brake fluid that has been drained from the hydraulic system.**

1. Remove the brake light warning light switch from the pressure differential valve (Fig. 7) on 500-900 Series trucks.
2. Bleed the master cylinder at the outlet port side of the system being serviced.

On a master cylinder without bleed screws, loosen the master cylinder to hydraulic line nut. Operate the brake pedal slowly until the brake fluid at the outlet connection is free of bubbles, then tighten the tube nut to the specified torque. **Do not use the secondary piston stop screw located on the bottom of the master cylinder to bleed the brake system. Loosening or removing this screw could result in damage to the secondary piston or stop screw.** Operate the brake pedal slowly until the brake fluid at the outlet connection is free of air bubbles, then tighten the bleed screw.

3. Position a suitable 3/8 inch box wrench on the bleeder fitting on the brake wheel cylinder. Attach a rubber drain tube to the bleeder fitting. The end of the tube should fit snugly around the bleeder fitting.
4. Submerge the free end of the tube in a container partially filled with clean brake fluid, and loosen the bleeder fitting approximately 3/4 turn.
5. Push the brake pedal down slowly thru its full travel. Close the bleeder fitting, then return the pedal to the fully-released position. Repeat this operation until air bubbles cease to appear at the submerged end of the bleeder tube.
6. When the fluid is completely free of air bubbles, close the bleeder fitting and remove the bleeder tube.
7. Repeat this procedure at the brake wheel cylinder on the opposite side. Refill the master cylinder reservoir after each wheel cylinder is bled.

When the bleeding operation is complete, the master cylinder fluid level should be filled to within 1/4 inch from the top of the reservoirs.

8. Centralize the pressure differential valve. Refer to the Centralizing of the Pressure Differential Valve procedures in this Section.
9. Install the brake warning light switch on the pressure differential valve on 500-900 Series trucks.

PRESSURE BLEEDING—CONVENTIONAL SINGLE-BRAKE SYSTEM HYDRAULIC MASTER CYLINDER

Be sure that the tank is clean and there is enough of the specified brake fluid (C6AZ-19542-A extra heavy duty) in the bleeder tank to complete the bleeding operation and that the tank is charged with 10-30 pounds of air pressure. Never exceed 50 pounds pressure.

On a C-Series truck with a single master cylinder, the master cylinder can only be bled manually. Therefore, bleed the entire hydraulic system first before bleeding the master cylinder.

1. On a L-, LN-, or LT-Series truck, clean all dirt from around the filler hole on the top of the master cylinder reservoir, and attach the bleeder tank hose to the filler hole.

On a C-Series truck with a single master cylinder, disconnect the line from the bottom of the master cylinder and connect the line to the pressure bleeder tank hose. Install a 5/16 inch Weatherhead plug into the bottom of the master cylinder.

2. Attach a rubber drain tube to the bleeder screw of the brake cylinder. The end of the tube should fit snugly around the bleed screw.
3. Submerge the free end of the tube in a container partially filled with clean brake fluid and then loosen the bleeder screw.
4. Open the valve on the bleeder tank to admit pressurized brake fluid to the master cylinder reservoir (or line).
5. When air bubbles cease to appear in the fluid at the submerged end of the drain tube, close the bleeder screw and remove the tube.
6. Repeat this procedure at each brake cylinder.
7. When the bleeding operation is completed, close the bleeder tank valve and remove the tank hose from the filler hole.

On a C-Series truck with a single master cylinder, remove the line from the tank hose and connect it to the master cylinder.

8. On all vehicles, refill the master cylinder reservoir to within 1/4 inch from the top of the filler neck.

C-SERIES TRUCK SINGLE MASTER CYLINDER BLEEDING

1. Loosen the fittings at the bottom of the master cylinder, approximately one turn.
2. Wrap a shop cloth, or a piece of clean waste material, around the tubing below the fitting to absorb expended brake fluid.
3. Push the brake pedal down slowly by hand to the floor of the cab. This will force air which may be trapped in the master cylinder to escape at the fitting.
4. Hold the pedal down and tighten the fitting. Release the brake pedal. **Do not release the brake pedal until the fitting is tightened as additional air will be introduced into the master cylinder.**
5. Repeat this procedure until air ceases to escape at the fitting and a firm pedal is obtained.

PRESSURE BLEEDING—DUAL BRAKE SYSTEM HYDRAULIC MASTER CYLINDER

Bleed the longest lines first. The bleeder tank should contain enough of the specified brake fluid (C6AZ-19542-A extra heavy duty) to complete the bleeding operation. The tank should be charged with approximately 10 to 30 pounds of air pressure. Never exceed 50 pounds pressure. **Never use brake fluid that has been drained from the hydraulic system.**

1. Remove the brake warning light switch from the pressure differential valve on 500-900 Series trucks (Fig. 7).
2. Clean all dirt from the master cylinder reservoir cover.
3. Remove the master cylinder reservoir cover and rubber gasket, and fill the master cylinder reservoir with the specified brake fluid. Install the pressure bleeder adapter tool to the master cylinder, and attach the bleeder tank hose to the fitting on the adapter.

Master cylinder pressure bleeder adapter tools can be obtained from the various manufacturers of pressure bleeding equipment. Follow the instructions of the manufacturer when installing the adapter.

4. Position a 3/8 inch box wrench on the bleeder fitting on the right rear brake wheel cylinder. Attach a bleeder tube to the bleeder fitting. **The end of the tube should fit snugly around the bleeder fitting.**
5. Open the valve on the bleeder tank to admit pressurized brake fluid to the master cylinder reservoir.
6. Submerge the free end of the tube in a container partially filled with clean brake fluid, and loosen the bleeder fitting.
7. When air bubbles cease to appear in the fluid at the submerged end of the bleeder tube, close the bleeder fitting and remove the tube.

9. When the bleeding operation is completed, close the bleeder tank valve and remove the tank hose from the adapter fitting.
10. **Remove the Pressure Bleeder Adapter Tool. Fill the master cylinder reservoirs to within 1/4 inch from the top. Install the master cylinder cover and gasket.**
11. **Centralize the pressure differential valve.**
12. Install the brake warning light switch on the pressure differential valve on 500-900 Series trucks.

CENTRALIZING THE PRESSURE DIFFERENTIAL VALVE

F-100-350, E-100-300, P-350-400 AND BRONCO

After any repair or bleeding of the primary (front brake) or secondary (rear brake) system, the dual-brake warning light will usually continue to be illuminated due to the pressure differential valve remaining in the off center position.

To centralize the pressure differential valve and turn off the warning light after a repair operation:

1. Turn the ignition switch to the ACC or ON position.
2. Check the fluid level in the master cylinder reservoirs and fill them to within 1/4 inch of the top with the specified brake fluid, if necessary.
3. Depress the brake pedal and the piston will center itself causing the brake warning light to go out.
4. Turn the ignition switch to the OFF position.
5. Before driving the vehicle, check operation of the brakes and be sure that a firm pedal is obtained.

500-900 SERIES TRUCKS WITH SPLIT HYDRAULIC BRAKES

The pressure differential valve used with the split hydraulic brake system has a self centering spring. Use the following procedure to reset the valve:

1. Remove the switch connector wire.
2. Remove the threaded hex-shaped electrical switch body from the center of the valve. This allows the valve centering springs to re-position the valve.
3. Install the electrical switch and connect the wire.
4. Apply the brakes a few times and check the operation of the warning light. The light should go on with the ignition switch in the START position only.

HYDRAULIC LINE REPAIR

Steel tubing is used in the hydraulic lines between the master cylinder and the front brake tube connector (Fig. 10), and between the rear brake tube connector (Fig. 11) and the rear brake cylinders. Flexible hoses connect the brake tube to the front brake cylinders and to the rear brake tube connector.

When replacing hydraulic brake tubing, hoses, or connectors, tighten all connections securely. After replacement, bleed the brake system at the wheel cylinders and at the booster, if so equipped.

BRAKE TUBE

If a section of the brake tube becomes damaged, the entire section should be replaced with tubing of the same type, size, shape, and length. **Copper tubing should not be used in the hydraulic system.** When bending brake tubing to fit the frame or rear-axle contours, be careful not to kink or crack the tube.

All brake tubing should be double flared to provide good leak-proof connections. Always clean the inside of a new brake tube with clean isopropyl alcohol.

Flaring a Line (Split-Die Type)

Refer to Figs. 12 and 13

1. Cut off and straighten the required length of line (A line cutting tool will simplify obtaining a clean and square cut).
2. Square off the ends of the line with a file and chamfer the end of the line to be flared.
3. Select the split die for the line being used and insert the die into the tapered hole in the body.
4. Push the tube through the die until the line is flush with the face of the die. Lock the line inn this position by tightening the wing nut securely.
5. The punches are marked Op. 1 and Op. 2. Slide the first operation punch into the hole in the center of the body and tighten the screw well home to form the single flare.
6. Release the screw and replace the first operation punch with the second operation punch and tighten the screw to form the double flare.
7. Release the screw, wing nut, punch and dies.
8. Remove the line and inspect the flare for cracks or poor flare form. If any doubt exists about the flare it should be cut off and the process repeated.

The finished flare must be square with the line, free from any cracks and have a smooth mating surface to ensure a leakproof connection.

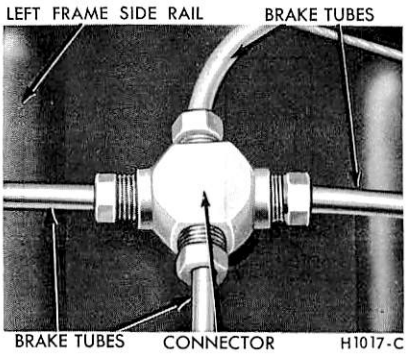

FIG. 10 Front Brake Tube Connector—Typical

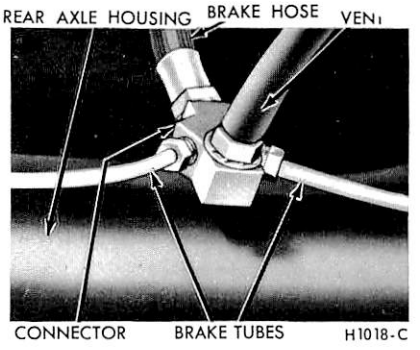

FIG. 11 Rear Brake Tube Connector

Flaring a Line (Flaring-Bar Type)

Refer to Figs. 12 and 14.

1. Cut off and straighten the required length of line. (A line cutting tool will simplify obtaining a clean and square cut.)
2. Square off the ends of the line with a file and chamfer the end of the line to be flared.
3. Insert the line through its appropriate ribbed hole in the bar assembly until the end of the line protrudes approximately the thickness of the respective adaptor above the bar, or flush with the bar, depending on the tool used.
4. Fit the adaptor on to the line and slide the bar into the yoke. Lock the bar in position with the line beneath the yoke screw.
5. Form the single flare by screwing the yoke screw well home.
6. Release the screw and remove the adaptor.
7. Form the double flare by screwing down the yoke screw again, with second adaptor fitted, depending on the tool used.
8. Release the screw, bar and flared

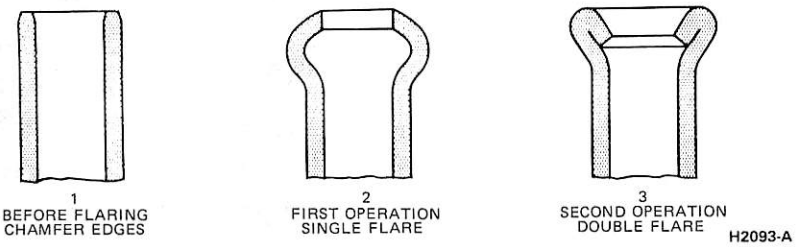

FIG. 12 Line Flaring Sequence

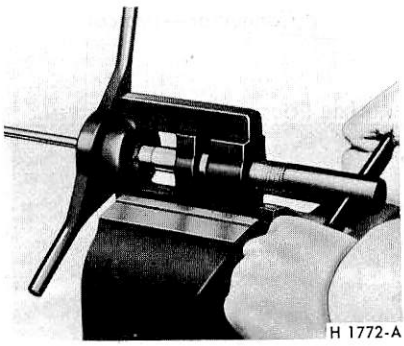

FIG. 13 Line Flaring (Split Die Type)

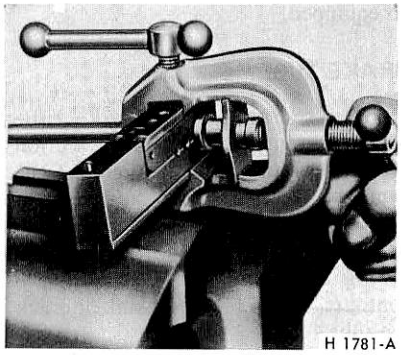

FIG. 14 Line Flaring (Flaring Bar Type)

line. Inspect the flare for cracks or poor flare form and if any doubt exists about the flare, it should be cut off and the process repeated.

8. Repeat steps 3 through 6 at the opposite wheel cylinder of the system being bled.

BRAKE HOSE

A flexible brake hose should be replaced if it shows signs of softening, cracking, or other damage.

When installing a new brake hose, position the hose to avoid contact with other truck parts.

REMOVAL AND INSTALLATION

BRAKE DRUM REMOVAL AND INSTALLATION THROUGH 1000 SERIES

The service procedures covered here apply to both hydraulic and air brakes. Since the F-100 through 350, E-100 through 300, Bronco or the P-350, 400 (front and rear) and the 4-wheel drive front brake drum procedures apply to hydraulic brakes only, they are covered in the Removal and Installation Section of Part 12-02.

FRONT BRAKE DRUM

1. Raise the truck until the wheel and tire clear the floor and remove the wheel and tire from the hub. Back off the brake shoe adjusting screw so that the shoes do not contact the brake drum. Remove the grease cap and the gasket (if so equipped) from the hub.
2. With 4,000 through 7,000 lb. and 18,000 lb. front axles, remove the cotter pin, adjusting nut and flat washer from the spindle.

On trucks with a 9,000, 11,000 or 15,000 lb. axle, remove the lock nut, the dimpled washer, the locking ring and the adjusting nut and pin assembly.

3. Remove the outer bearing cone and roller. Pull the hub and drum assembly off the wheel spindle.
4. Remove the front wheel to hub retaining nuts or rim and tire attaching nuts. Remove the wheel or rim and tire from the hub and drum.
5. Remove the brake drum retainers and attaching bolts, screws, or bolts and nuts.
6. Remove the brake drum from the hub.
7. Check the drum for damage or wear, and repair or replace as necessary. If a new drum is to be installed, be sure to remove the protective coating with a suitable degreaser.

New grease retainer seals should be installed whenever a wheel and hub is removed.

8. Place the brake drum to the hub and install the retainers and retaining bolts, screws, or bolts and nuts.
9. Install the hub and drum on the wheel spindle. **Keep the hub centered on the spindle to prevent damage to the grease retainer or the spindle threads.**
10. With 4,000 through 7,000 lb. and 18,000 lb. front axles, install the outer bearing cone and roller and the flat washer on the spindle, then install the adjusting nut. With front axles of 9,000 lbs., 11,000 or 15,000 lbs. capacity, install the outer bearing cone and roller and the bearing adjusting nut and pin assembly.
11. Install the wheel and tire on the hub, then install the clamps (if applicable) and the wheel stud nuts.
12. Torque the adjusting nut to specifications while rotating the wheel. Refer to Group 11 for the wheel bearing adjustment procedure.

Install the dimpled washer with the dimple indexed in one of the holes in the adjusting nut. Install the lock nut and torque to specifications. Bend the dimpled washer over a flat of the lock nut.

13. Install the gasket (if so equipped) and the grease cap, and torque the wheel stud nuts to specifications. Install the hub cap if so equipped, and adjust the brakes.

REAR BRAKE DRUM

1. Raise the truck and install safety stands.
2. Remove the wheel and tire as an assembly. Then back off the rear brake shoe adjustment.
3. Remove the rear axle shaft retaining nuts, adapters, axle shaft, and grease seal.
4. Remove the wheel bearing locknut, lock washer, and adjusting nut.
5. Remove the hub and drum from the axle.
6. Remove the brake drum to hub retaining screws, bolts, or bolts and nuts. Then remove the brake drum from the hub.
7. Check the drum for damage or wear, and repair or replace as necessary. Brake drums must not be machined to a braking surface diameter greater than the maximum diameter shown on the drum. If a new drum is to be installed, be sure to remove the protective coating with a suitable degreaser.

New grease retainer seals should be installed whenever a wheel and hub is removed.

8. Position the brake drum to the hub and install the attaching screws, bolts, or bolts and nuts.
9. Position the hub and drum as an assembly on the axle and start the adjusting nut.
10. Adjust the wheel bearing nut and then install the wheel bearing lock washer and lock nut.
11. Install a new rear axle oil seal, axle shaft and gasket, stud adapters, and attaching nuts.
12. Install the wheel and tire as an assembly.
13. Adjust the brake shoes and then remove the safety stands and lower the truck.

OVERHAUL

BRAKE DRUM REFINISHING

Minor scores on a brake drum can be removed with fine emery cloth, provided the emery is thoroughly cleaned off the drum after the operation.

A badly scored, rough, or out-of-round drum should be ground or turned on a drum lathe. Do not remove any more material from the drum than is necessary to provide a smooth surface for the brake shoe contact. **Brake drum maximum braking surface diameter is shown on each brake drum (Fig. 14). Brake drums which exceed the maximum braking surface diameter shown on the brake drum, either through wear or refinishing, must be replaced. The maximum braking surface diameter specification, which is shown on each brake drum, allows for a 0.060 inch machining cut over the original nominal drum diameter plus 0.030 inch additional wear before reaching the drum-discard diameter.**

BRAKE SHOE AND BAND RELINING

1. Remove the rivets and remove the old lining.
2. Clean the shoe or band thoroughly with cleaning fluid, especially the rim surface. Wipe the shoe or band dry and remove all burrs or rough spots from the shoe.
3. On service brake, check the inside diameter of the brake drum.
4. Position the new lining on the shoe or band and install new rivets, beginning with the rivet holes near the center of the shoe. On some vehicles, the primary lining is shorter than the secondary lining. If this condition exists, position the shorter (primary) lining to line up with the heel end of the shoe. **Do not let brake fluid, oil or grease touch the brake lining. If a brake lining kit is used to replace the worn linings, install all the parts supplied in the kit.**
5. Check the clearance between the lining and shoe rim. The lining must seat snugly against the rim with not more than 0.005 inch separation midway between any two rivets. If only the linings are replaced on duo-servo single anchor brakes with fixed anchor pins, the brake linings must be cam ground 0.010 inch at the ends after the linings are riveted to the brake shoe.

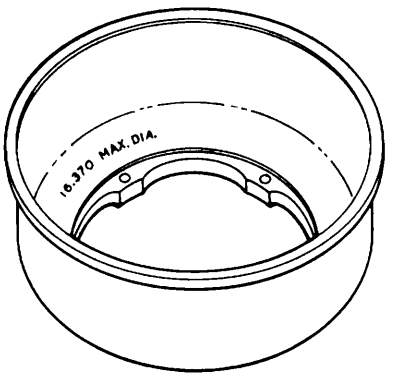

H1834-A

FIG. 15 Brake Drum Maximum Braking Surface Diameter Marking Location—Typical Medium—Heavy Truck Shown

FRONT DISC BRAKES

1. Remove the shoe and linings as outlined in Part 12-24.
2. Make three thickness measurements with a micrometer across the middle section of the shoe and lining. Take one reading at each side and one in the center. If the assembly has worn to a thickness of 0.210 inch (Shoe and lining together) at any one of the three measuring locations, or if the lining shows evidence of brake fluid or oil contamination that is causing a brake pull, replace all (4) shoe and lining assemblies.
3. Check caliper to spindle attaching bolt torque (F-250-350, above 6200 G.V.W.). Torque them to specification if required.
4. To check rotor runout, first eliminate the wheel bearing end play by tightening the adjusting nut. After tightening the nut, check to see that the rotor can still be rotated.
5. Clamp a dial indicator to the spindle so that the stylus contacts the rotor at a point approximately 1 inch from the outer edge. Rotate the rotor and take an indicator reading. If the reading exceeds 0.010 inch total lateral runout within a six inch radius on the indicator, replace or resurface the disc brake rotor. **The following requirements must be met when resurfacing disc brake rotors (Fig. 15).**

Rotunda Disc Brake Refinishing Lathe, Tool FRE-1466-B should be used to refinish the disc brake rotors. The step-by-step resurfacing procedure provided with the tool must be adhered to.

A maximum of 0.020 inch material may be machined equally off each surface (A and B) (Fig. 16). If rotor thickness falls below the minimum shown on each rotor, it must be replaced.

The finished braking surfaces of the rotor must be flat and parallel within 0.001 inch; lateral runout must not exceed 0.003 inch total indicator reading within a six inch radius, and the surface finish of the braking surfaces are to be 15-80 micro inches.

When the runout check is finished, be sure to adjust the bearings as outlined in Part 11-10, in order to prevent bearing failure.

6. Check the rotor for scoring. Minor scores can be removed with a fine emery cloth. If the rotor is excessively scored, refinish it as outlined in Step 5 or replace the rotor if required.
7. Visually check the caliper. If it is cracked or if any leakage is evident, it should be replaced. Any leakage around the dust boot indicates the need for removal and disassembly.
8. Check brake hoses for signs of cracking, leaks, or abrasion. Replace if necessary.

BRAKE CYLINDER

1. Clean all brake cylinder parts in clean isopropyl aocohol. Inspect all parts for wear or damage. Check the cylinder bore for rust, scores, or other damage. Be sure that the bleeder screw passage is clean and open. Replace all parts that are worn or damaged.
2. **If dirt is found in any part of the hydraulic system, flush the entire system with clean isopropyl alcohol.**

MASTER CYLINDER

1. Clean all master cylinder parts in clean isopropyl alcohol, and inspect the parts for wear or damage, replacing them as required. **When a master cylinder repair kit is used, install all of the parts supplied in the kit.**
2. Check the ports and vents in the master cylinder to make sure that all are open and free of foreign matter.
3. On a single brake system master cylinder, check to see if the spring valve (riveted to the front end of the piston) is loose or has moved so that the piston ports are open, replace the piston.
4. Inspect the cylinder walls for scores or rust, and recondition them if necessary. Hone the cylinder walls no more than necessary (0.003 inch maximum), either to remove scores and rust, or to obtain a smooth wall surface. Remove any burrs or loose metal that may have resulted from the honing operation, and clean the cylinder with clean isopropyl alcohol.

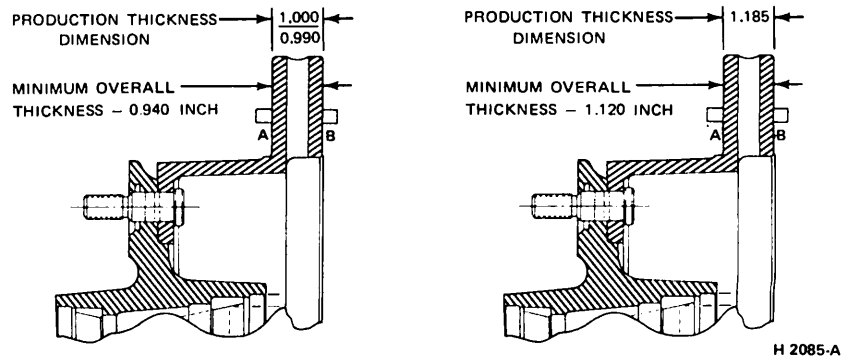

FIG. 16 Disc Brake Rotor Service Limits

BRAKE DRUMS AND LININGS

1. After removing one front wheel and drum and one rear wheel and drum from the vehicle, inspect the drums and brake shoe linings for wear or damage that would affect brake operation. **Do not let brake fluid, oil or grease touch the drum or linings.**
2. A brake shoe should be relined when the lining face is worn to within 1/32 inch of any rivet head, or when the lining has been soaked with brake fluid, oil or grease. If a worn lining is not replaced, the brake drum may become severely damaged. **Always replace the primary and secondary brake shoe lining assemblies on both front or both rear brake assemblies at the same time.**
3. Before relining a brake shoe, inspect the shoe for distortion, cracks, or looseness between the rim and web. If one of these conditions exists, replace the shoe. **Do not attempt to repair a damaged brake shoe.**
4. If the drum and linings are in good condition, install the wheel and drum. **The condition of the drums and linings of the opposite wheel will usually be about the same as that found at the wheel that was removed.**
5. Add enough of the specified brake fluid to the master cylinder reservoir to bring the level to within 1/4 inch of the top of the filler neck.
6. Check to be sure that the parking brake is fully released before making any brake adjustment.
7. Check the front brake anchor pin nut with a wrench (on brake assemblies with an adjustable anchor pin). If the bolt is loose, torque it to 80-100 ft-lbs.

PART 12-02 Drum Brakes — Single Cylinder, Dual Piston

Applies To Bronco, Econoline and F-100 Thru L-800 Series Trucks

COMPONENT INDEX	Page	COMPONENT INDEX	Page
BRAKE BACKING (CARRIER) PLATE		BRAKE SHOES	
Removal and Installation	02-07	Adjustment	02-01
BRAKE DRUMS		Removal and Installation	02-03
Removal and Installation	02-02	BRAKE WHEEL CYLINDER	
BRAKE MASTER CYLINDER		Disassembly and Overhaul	02-15
Disassembly and Overhaul	02-15	Removal and Installation	02-05
Removal and Installation	02-08	PRESSURE DIFFERENTIAL VALVE	
BRAKE PEDAL		Removal and Installation	02-12
Removal and Installation	02-12	SPECIFICATIONS	02-21

ADJUSTMENTS

SELF ADJUSTING BRAKES—F-100-350, E-100-300, P-350-400 AND BRONCO

The brake shoes are automatically adjusted when the vehicle is driven in reverse and the brakes applied. A manual adjustment is required only after the brake shoes have been relined or replaced. **The manual adjustment is performed while the drums are removed, using the tool and the procedure detailed below.**

When adjusting the rear brake shoes, check the parking brake cables for proper adjustment. Make sure that the equalizer operates freely.

To adjust the brake shoes:

1. Use Rotunda Tool HRE8650, (Fig. 1) and adjust to the inside diameter of the drum braking surface.
2. **Reverse the tool as shown in Fig. 2 and adjust the brake shoes to touch the gauge. The gauge contact points on the shoes (Fig. 2) must be parallel to the vehicle with the center line through the center of the axle. Hold the automatic adjusting lever out of engagement while rotating the adjusting screw, to prevent burring the screw slots. Make sure the adjusting screw rotates freely. If necessary, lubricate the adjusting screw threads with a thin, uniform coating of C1AZ-19590-B grease.**
3. Apply a small quantity of C1AZ-19590-B high temperature grease to the points where the shoes contact the carrier plate, being careful not to get the lubricant on the linings.
4. Install the drums. Install the retaining nuts and tighten securely.
5. Install the wheels on the drums and tighten the mounting nuts to specifications.
6. Complete the adjustment by applying the brakes several *times* while backing the vehicle.
7. After the brake shoes have been properly adjusted, check the operation of the brakes by making several stops while operating in a forward direction.

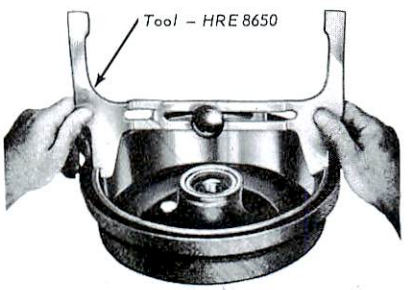

FIG. 1 Measuring Drum

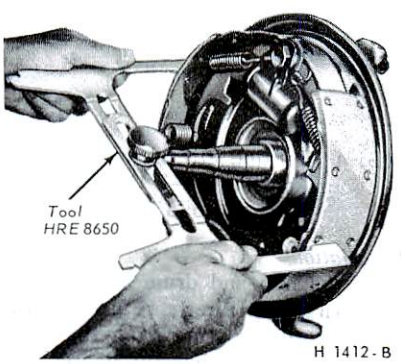

FIG. 2 Measuring Shoes

FRONT BRAKE—P-500

Manual Adjustment

The single anchor brake is adjusted by turning an adjusting screw located between the lower ends of the shoes (Figs. 3, 4 and 5).

1. Raise the vehicle until the wheels clear the floor.
2. Remove the cover from the adjusting hole at the bottom of the brake carrier plate, and turn the adjusting screw inside the hole to expand the brakes shoes until they drag against the brake drum and lock up the drum. Back off the adjusting screw until a slight drag is noted (Fig. 3).
3. When the shoes are against the drum, back off the adjusting screw 10 to 12 notches so that the drum rotates freely without drag. If the drum does not rotate freely, remove the wheel and drum, and then blow out the dust and dirt from the linings. With sand paper, remove all

rust from the points where the shoes contact the carrier plate and apply a light coating of high temperature grease (C1AZ-19590-B). Be careful not to get the lubricant on the linings.

4. Install the wheel and drum, and adjust the shoes. Install the adjusting hole cover on the brake backing plate.
5. Check and adjust the other three brake assemblies.
6. Apply the brakes. If the pedal travels more than halfway down between the released position and the floor, too much clearance exists between the brake shoes and the drums. Repeat steps 2 and 3 above.
7. When all brake shoes have been properly adjusted, lower the vehicle. Road test the vehicle and check the operation of the brakes. Perform the road test only when the brakes will apply and the vehicle can be safely stopped.

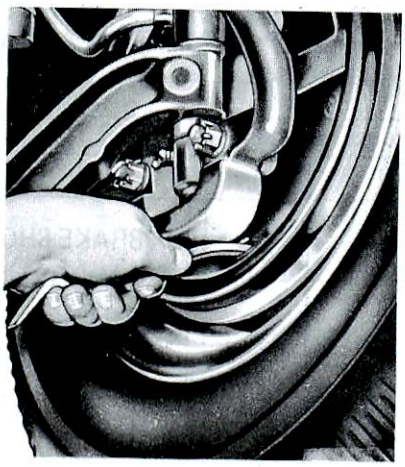

H1006-B

FIG. 3 Single Anchor Brake Shoe Adjustment

REMOVAL AND INSTALLATION

BRAKE DRUMS

FRONT BRAKE DRUM—E-100-300, AND P-350-400 SERIES

Removal

1. Raise the vehicle so that the wheel is clear of the floor.
2. Remove the wheel cover or hub cap and wheel, bearing dust cap. Remove the cotter pin, nut lock, nut, and washer.
3. Pull the brake drum approximately two inches forward and push back into position. Remove the wheel bearing and withdraw the brake drum.

If the brake drum will not come off, insert a narrow screwdriver through the brake adjusting hole in the carrier plate, and disengage the adjusting lever from the adjusting screw. While thus holding the adjusting lever away from the adjusting screw, back off the adjusting screw with the brake adjusting tool (Fig. 4). **Back off the adjustment only if the drum cannot be removed. Be very careful not to burr, chip, or damage the notches in the adjusting screw; otherwise, the self adjusting mechanism will not function properly.**

If the adjusting screw was backed off, check to make sure that the adjusting lever is still properly seated in the shoe web.

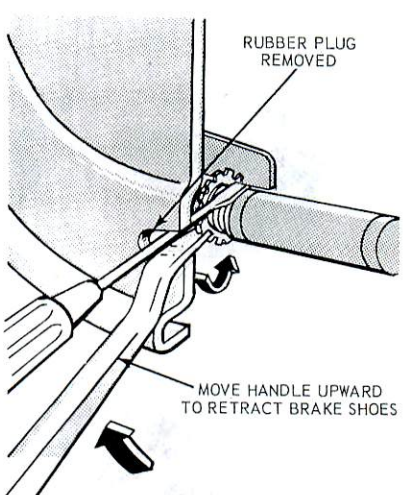

H1590-A

FIG. 4 Backing Off Brake Adjustment—F-100-250, E-100-200, and Bronco

Installation

1. If the hub and drum assembly is being replaced, remove the protective coating from the new drum with carburetor degreaser. Install new bearings and grease retainer. Pack the wheel bearing, install the inner bearing cone and roller assembly in the inner cup, and install the new grease retainer. **Refer to Part 11-10,** If the original drum is being installed, make sure that the grease in the hub is clean and adequate.
2. **Install the drum assembly, outer wheel bearing, washer and *adjusting* nut. Refer to Part 11-10.**
3. Adjust the wheel bearing, install the nut lock and cotter pin, then install the grease cap.
4. Install the wheel and hub cap. If the adjustment was backed off, adjust the brake as outlined under Brake Shoe Adjustment.

REAR BRAKE DRUM—F-100-F-250 (EXCEPT HEAVY DUTY), E-100-200 AND BRONCO

Removal

1. Raise the vehicle so that the wheel is clear of the floor.
2. Remove the hub cap and wheel and tire assembly. Remove the three retaining nuts and remove the brake drum.

If the brake drum will not come off, insert a narrow screwdriver through the brake adjusting hole in the backing plate, and disengage the adjusting lever from the adjusting screw. While thus holding the adjusting lever away from the adjusting screw, back off the adjusting screw with the brake adjusting tool (Fig. 4). **Back off the adjusting screw if the drum cannot be removed. Be very careful not to burr, chip, or damage**

the notches in the adjusting screw; otherwise the self adjusting mechanism will not function properly.

If the adjusting screw was backed off, check to make sure that the adjusting lever is still properly seated in the shoe web.

Installation

1. Remove the protective coating from a new drum with carburetor degreaser.
2. Adjust the brakes as outlined under Brake Shoe Adjustments.
3. Install the drum.
4. Install the three retaining nuts and tighten securely. Install the wheel on the axle shaft flange studs against the drum, and tighten the retaining nuts to specifications.

REAR BRAKE DRUM—F-250 (HEAVY DUTY) 350, E-300, P-350, P-400

Removal

1. Raise the truck and install stands.
2. Remove the wheel and tire as an assembly. Then back off the rear brake shoe adjustment.
3. Remove the rear axle retaining nuts, adapters, axle shaft, and grease seal.
4. Remove the wheel bearing locknut, lock washer, and adjusting nut.
5. Remove the hub and drum from the axle.
6. Remove the brake drum to hub retaining screws, bolts, or bolts and nuts. Then remove the brake drum from the hub.

Installation

1. Check the drum for damage or wear, and repair or replace as necessary. If a new drum is to be installed, be sure to remove the protective coating with a suitable degreaser.

New grease retainer seals should be installed whenever a wheel and hub is removed. Refer to Part 11-11.

2. Position the brake drum to the hub and install the attaching screws, bolts, or bolts and nuts.
3. Position the hub and drum as an assembly on the axle and start the adjusting nut.
4. Adjust the wheel bearing nut and then install the wheel bearing lock washer and locknut. Refer to Part 11-11.
5. Install a new rear axle oil seal, axle shaft and gasket, stud adapters, and attaching nuts.
6. Install the wheel and tire as an assembly.
7. Adjust the brake shoes and then remove the stand and lower the truck.

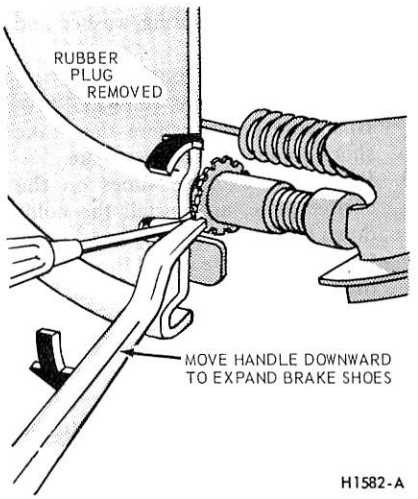

FIG. 5 Expanding Brake Shoes—F-250-350, E-300, and P-350-400

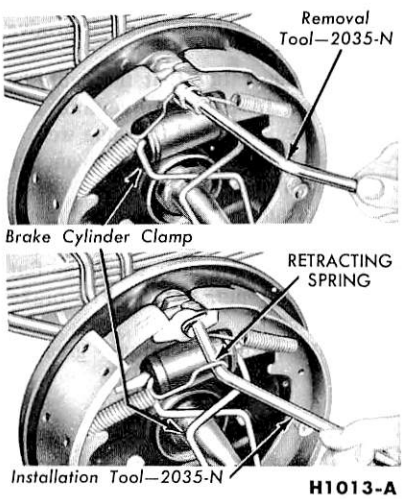

FIG. 6 Spring Replacement—Typical

FRONT BRAKE DRUM—F-100-250 (4 X 4) AND BRONCO

Removal

1. Raise the vehicle and install stands.
2. Back off the brake shoe adjustment. Remove the hub dust cap.

Remove the hub retaining snap ring, and slide the splined driving hub from between the axle shaft and the wheel hub. Remove the driving hub spacer and spring.

3. With Tool T59T-1197-B, remove the lock nut, the nut lock, and the wheel bearing adjusting nut from the steering spindle. Remove the wheel, hub and drum as an assembly. The wheel outer bearing will be forced off the spindle at the same time. Remove the wheel inner bearing cone.

If the vehicle is equipped with a locking type hub refer to Part 11-12.

4. Remove the front wheel to hub retaining nuts. Remove the wheel and tire from the hub and drum.
5. Remove the brake drum retaining bolts and nuts.
6. Remove the brake drum from the hub.

Installation

1. Place the brake drum to the hub and install the retaining bolts and nuts.
2. Install the wheel and tire to the hub and start the retaining nuts.
3. Install the wheel hub and drum assembly on the spindle. Install the driving hub spacer and then the wheel outer bearing cone and the adjusting nut with the dowel outboard.
4. **Rotate the wheel in either direction and, at the same time, tighten the inner locknut to 50 ft-lbs with Tool T59T-1197-A.**
5. Follow the Procedure under Front Wheel Bearing Adjustment in Part 11-12.
6. Slide the driving hub on the axle shaft and install the snap ring.

If the vehicle is equipped with a locking type hub, refer to Part 11-12.

7. Adjust the brake, and then torque the wheel nuts.
8. Install the dust cap.
9. Remove the stands and lower the truck.

BRAKE DRUMS 500 THROUGH 1000 SERIES

Since the brake drum service procedures for these models apply to both hydraulic and air brakes, they are covered under Removal and Installation in Part 12-01.

BRAKE SHOE AND ADJUSTING SCREW

F-100-250, E-100-200 AND BRONCO EXCEPT HEAVY DUTY

Removal

1. With the wheel and drum removed, install a clamp over the ends of the brake cylinder as shown in Fig. 6.
2. Contract the shoes as follows:
   a. Disengage the adjusting lever from the adjusting screw by pulling backward on the adjusting lever (Fig. 7).
   b. Move the outboard side of the adjusting screw upward and back

off the pivot nut as far as it will go.

3. Pull the adjusting lever, cable and automatic adjuster spring down and toward the rear to unhook the pivot hook from the large hole in the secondary shoe web. **Do not attempt to pry the pivot hook out of the hole.**
4. Remove the automatic adjuster spring and adjusting lever.
5. Remove the secondary shoe to anchor spring with the tool shown in Fig. 6. With the same tool, remove the primary shoe to anchor spring and unhook the cable anchor. Remove the anchor pin plate, when so equipped.
6. Remove the cable guide from the secondary shoe (Fig. 7).
7. Remove the shoe hold-down springs, shoes, adjusting screw, pivot nut, and socket. Note the color of each hold-down spring for assembly.
8. On rear brakes, remove the parking brake link and spring. Disconnect the parking brake cable from the parking brake lever.
9. After removing the rear brake secondary shoe, disassemble the parking brake lever from the shoe by removing the retaining clip and spring washer (Fig. 7).

Installation

1. Before installing the rear brake shoes, assemble the parking brake lever to the secondary shoe and secure with the spring washer and retaining clip.
2. Apply a light coating of high temperature grease (C1AZ-19590-B) at the points where the brake shoes contact the carrier plate.
3. Position the brake shoes on the carrier plate, and install the hold-down spring pins, springs, and cups. On the rear brake install the parking brake link, spring and washer. Connect the parking brake cable to the parking brake lever (Fig. 7).
4. Install the anchor pin plate, when so equipped, and place the cable anchor over the anchor pin with the crimped side toward the backing plate.
5. Install the primary shoe to anchor spring with the tool shown in Fig. 6.
6. **Install the cable guide on the secondary shoe web with the flanged holes fitted into the hole in the secondary shoe web. Thread the cable around the cable guide groove (Fig. 7).**

It is imperative that the cable be positioned in this groove and not between the guide and the shoe web.

7. Install the secondary shoe to anchor (long) spring (Fig. 6).

Be certain that the cable end is not cocked or binding on the anchor pin when installed. All parts should be flat on the anchor pin. Remove the brake cylinder clamp.

8. Apply high-temperature grease (C1AZ-19590-B) to the threads and the socket end of the adjusting screw. Turn the adjusting screw into the adjusting pivot nut to the limit of the threads and then back off 1/2 turn.

Interchanging the brake shoe adjusting screw assemblies from one side of the truck to the other would cause the brake shoes to retract rather than expand each time the automatic adjusting mechanism operated. To prevent installation on the wrong side of the vehicle, the socket end of the adjusting screw is stamped with an **R** or **L** (Fig. 8). The adjusting pivot nuts can be distinguished by the number of lines machined around the body of the nut. Two lines indicate right hand nut; one line indicates a left hand nut.

9. Place the adjusting socket on the screw and install this assembly between the shoe ends with the adjusting screw nearest the secondary shoe.
10. Hook the cable hook into the hole in the adjusting lever from the backing plate side. The adjusting levers are stamped with an **R** or **L** to indicate their installation on the right or left hand brake assembly (Fig. 8).
11. Position the hooked end of the adjuster spring in the large hole in the primary shoe web, and connect the loop end of the spring to the adjuster lever hole.
12. Pull the adjuster lever, cable and

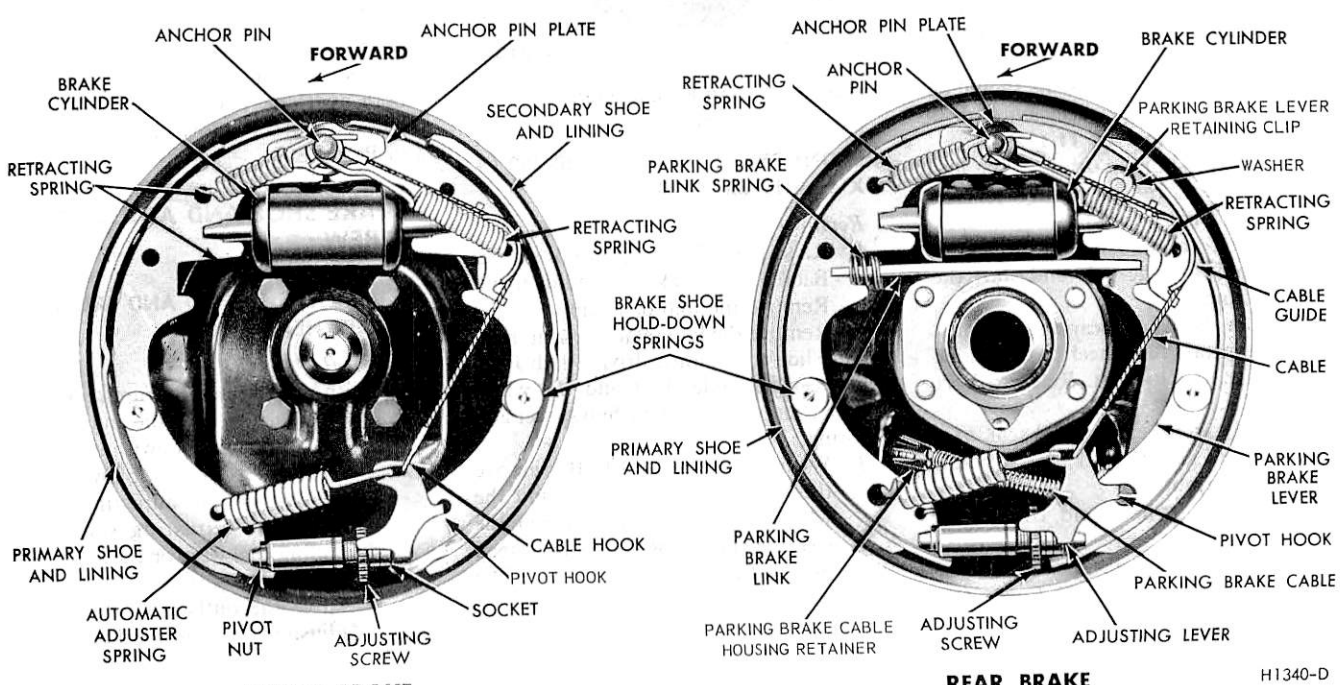

FIG. 7 Self Adjusting Brake Assemblies—F-100-250 4 x 4, E-100-200, and Bronco

automatic adjuster spring down toward the rear to engage the pivot hook in the large hole in the secondary shoe web (Fig. 7).

13. After installation, check the action of the adjuster by pulling the section of the cable between the cable guide and the adjusting lever toward the secondary shoe web far enough to lift the lever past a tooth on the adjusting screw wheel. The lever should snap into position behind the next tooth, and release of the cable should cause the adjuster spring to return the lever to its original position. This return action of the lever will turn the adjusting screw one tooth.

If pulling the cable does not produce the action described, or if the lever action is sluggish instead of positive and sharp, check the position of the lever on the adjusting screw toothed wheel. With the brake in a vertical position (anchor at the top), the lever should contact the adjusting wheel one tooth above the center line of the adjusting screw. If the contact point is below this center line, the lever will not lock on the teeth in the adjusting screw wheel, and the screw will not be turned as the lever is actuated by the cable.

To determine the cause of this condition:

a. Check the cable end fittings. The cable should completely fill or extend slightly beyond the crimped section of the fittings. If it does not meet this specification, possible damage is indicated and the cable assembly should be replaced.

b. Check the cable guide for damage. The cable groove should be parallel to the shoe web, and the body of the guide should lie flat against the web. Replace the guide if it shows damage.

c. Check the pivot hook on the lever. The hook surfaces should be square with the body on the lever for proper pivoting. Repair the hook or replace the lever if the hook shows damage.

d. See that the adjusting screw socket is properly seated in the notch in the shoe web.

F-250 (HEAVY DUTY) AND F-350 (REAR) E-300, P-350-400 SERIES—WEB LEDGE

Removal

1. Remove the wheel and drum. If the drum does not clear the brake shoes, retract the brake shoes as shown in Fig. 4

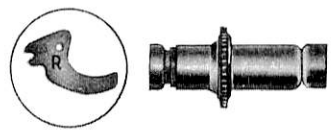

F-250 (H.D.)-F-350, E-300, P-350-P-400

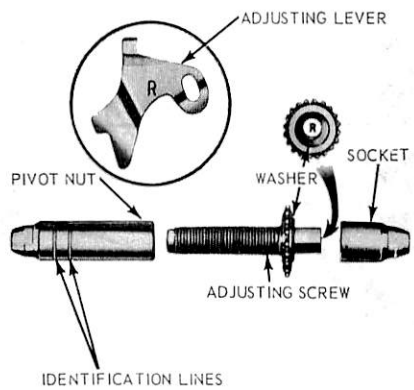

F-100-F-250, E-100, E-200 AND BRONCO
H1621-C

FIG. 8 Adjusting Screw and Lever Identification—F-100-250 (rear), E-100-200 and Bronco

2. On a front wheel, remove the spring-clip retainer fastening the adjusting cable anchor fitting to the brake anchor pin (Fig. 9).

On a rear wheel, remove the parking brake lever assembly retaining nut from behind the backing plate and remove the parking brake lever assembly (Fig. 10).

From this point on the disassembly of the front and rear brake assemblies are the same.

3. Remove the adjusting cable assembly from the anchor pin, cable guide and adjusting lever.
4. Remove the brake shoe retracting springs.
5. Remove the brake shoe hold-down spring from each shoe.
6. Remove the brake shoes and adjusting screw assembly.
7. Disassemble the adjusting screw assembly.

Installation

1. Clean and ledge pads (6) on the carrier plate. Sand lightly to bare metal.
2. **Apply a light coat of (C1AZ-19590-B) high temperature grease on the ledge pads of the backing plate. Also apply C1AZ-19590-B high temperature grease to the retracting and hold-down spring contacts on the brake shoes and carrier plate.**
3. Apply C1AZ-19590-B high temperature grease on the threads and socket end of the adjusting screw.
4. Install the upper retracting spring on the primary and secondary shoes as shown in Fig. 9 and position the shoe assembly on the backing plate with the wheel cylinder push rods positioned in the shoe slots.
5. Install the brake shoe hold-down springs (Fig. 10).
6. Install the brake shoe adjustment screw assembly (the slot in the head of the adjusting screw toward the primary shoe), lower retracting spring, adjusting lever spring, adjusting lever assembly and connect the adjusting cable to the adjusting lever. Position the cable in the cable guide and install the cable anchor fitting on the anchor pin.

Interchanging the brake shoe adjusting screw assemblies from one side of the truck to the other would cause the brake shoes to retract rather than expand each time the automatic adjusting mechanism operated. To prevent installation on the wrong side of the vehicle, the socket end of the adjusing screw is stamped with an **R** or **L** (Fig. 8). The adjusting pivot nuts can be distinguished by the number of lines machined around the body of the nut. Two lines indicate right hand nut; one line indicates a left hand nut.

7. On a rear wheel, install the parking brake assembly in the anchor pin and secure with the retaining nut behind the carrier plate.
8. Adjust the brakes before installing the drums, using Rotunda Tool HRE-8650, as outlined in this Part.

BRAKE WHEEL CYLINDER

Removal

1. Remove the wheel, drum, and brake shoes. Remove the cylinder-to-shoe connecting links.
2. Disconnect the brake line from the brake cylinder.
3. Remove the brake cylinder retaining bolts and lockwashers, and then remove the cylinder from the backing plate.

Installation

1. Position the brake cylinder on the backing plate and install the retaining bolts and lockwashers.
2. Install a new gasket on the brake line fitting and connect the line to the brake cylinder.
3. Install the brake shoes and the connecting links between the shoes and cylinder. Install the drum and the wheel.
4. Adjust the brakes and bleed the

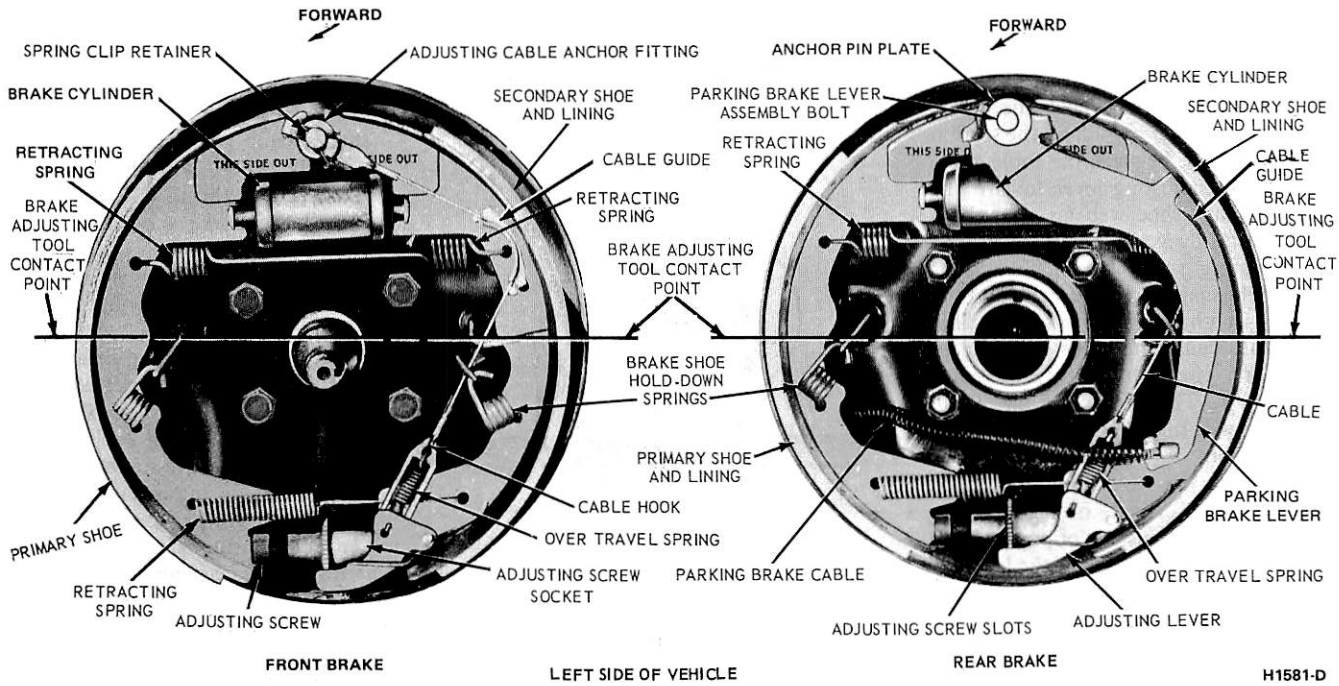

FIG. 9 Self Adjusting Brake Assemblies—F-250 (Heavy Duty)—and F-350 (rear) E-300 and P-350-400 (Front and Rear)

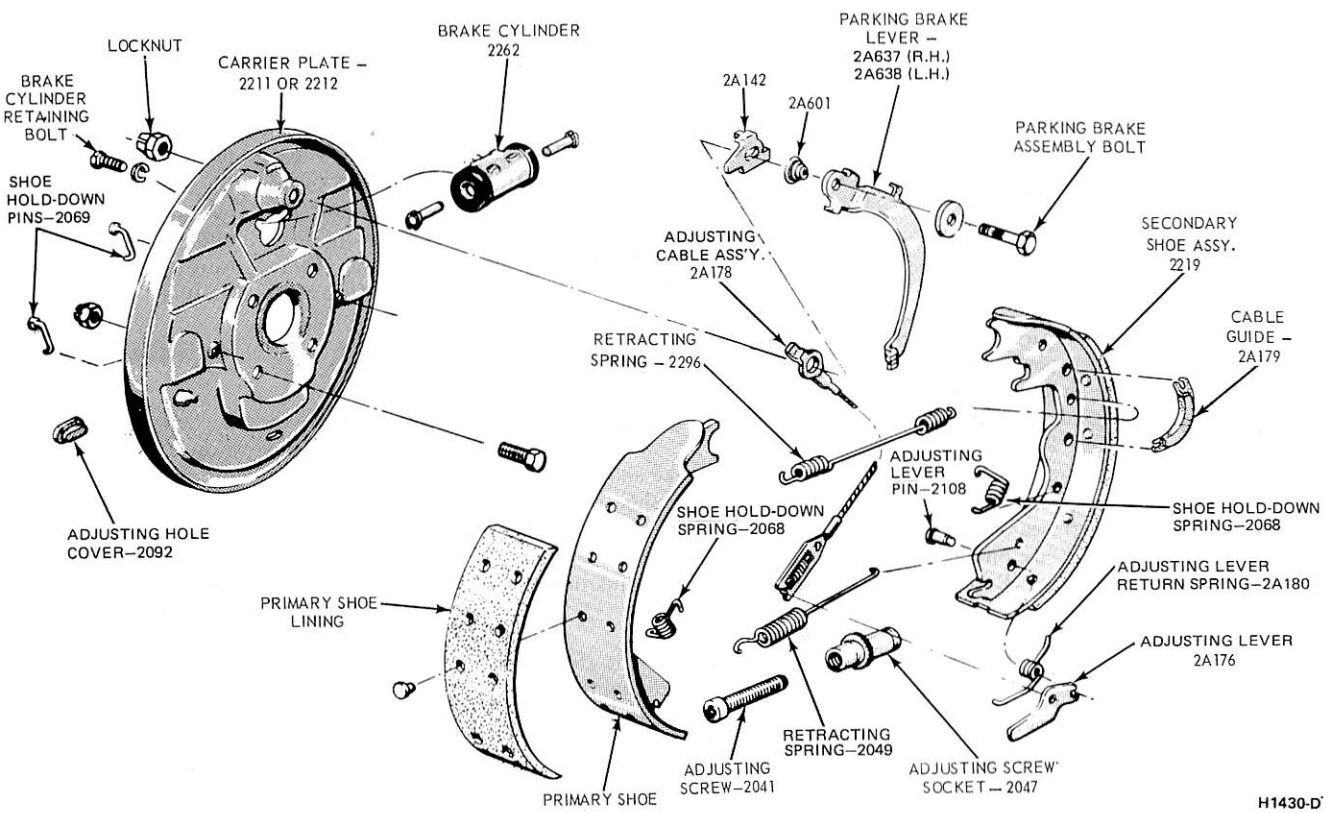

FIG. 10 Rear Web Ledge Single Anchor Brake—Disassembled

system. Check the pedal operation before moving the vehicle.

BRAKE CARRIER PLATE

F-100-250, E-100-200 AND BRONCO (EXCEPT 4 X 4 FRONT)

Removal

1. Remove the wheel and brake drum. Disconnect the brake line from the brake cylinder and submerge the end of the brake line in a can containing a small amount of brake fluid. This will minimize hydraulic line bleeding. Remove the brake shoes and the brake cylinder. On the rear wheels, disconnect the parking brake lever from the cable.
2. **If the rear backing plate is being removed, rotate the axle shaft so that the hole in the axle shaft flange aligns with the backing plate retaining nuts, then remove the nuts. Pull the axle shaft assembly out of the housing with Tool 4235-C, and a slide hammer Tool T50T-100-C, (Fig. 11). Lift off the carrier plate.**

If the front carrier plate is being replaced, remove the bolts and nuts that secure the plate to the front wheel spindle and lift off the plate.

Installation

1. Position the rear carrier plate on the retaining bolts in the axle housing flange. Insert the axle shaft assembly into the housing so that the splines engage the differential side gear, with the bearing retainer sliding onto the retaining bolts and against the carrier plate. Install the retaining nuts through the access hole in the axle shaft flange.

Position the front carrier plate on the wheel spindle and install the retaining bolts and nuts.

2. Install the brake cylinder and brake shoes. On a rear brake, connect the parking brake cable to the lever.
3. Connect the brake line to the brake cylinder, then install the wheel and brake drum. Adjust the brake shoes and bleed the hydraulic system.

F-100 4 X 2 SERIES WITH SPICER 60—3 AXLE—REAR

Brake carrier plate Removal and Installation procedure is similar to that used on the F-100 Ford axle. However, certain precautions are necessary if a new carrier plate is installed, since the side-to-side end play of the rear axle shafts can be affected. When replacing a brake carrier plate with a new or different plate, refer to Group 15—Rear Axle, for assembly procedure including end-play adjustments, etc.

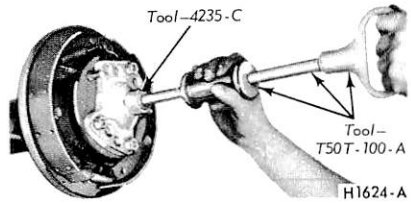

FIG. 11 Axle Shaft Removal

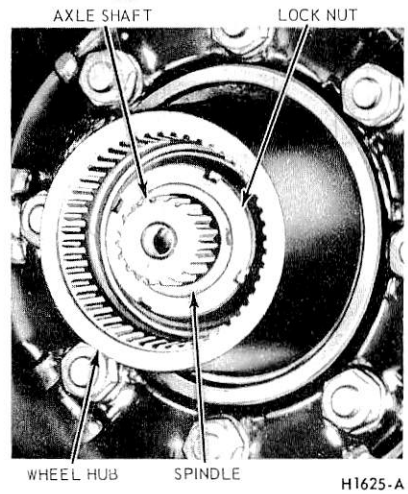

FIG. 12 Front Wheel Hub—Four-Wheel Drive

F-100-250 4 X 4 AND BRONCO SERIES—FRONT

Removal

1. Raise the vehicle on a hoist.
2. Remove the hub grease cap. Remove the hub retaining snap ring, and slide the splined driving hub from between the axle shaft and the wheel hub. Remove the driving hub spacer.

If the vehicle is equipped with a locking type hub, refer to Part 11-12.

3. Remove the lock nut, washer, and wheel bearing adjusting nut from the steering spindle. Remove the wheel, hub and drum as an assembly (Fig. 12). The wheel outer bearing will be forced off the spindle at the same time. Remove the wheel inner bearing cone.
4. Remove the cap screws which retain the brake backing plate and spindle to the spindle arm. Remove the brake backing plate and spindle.

Installation

1. Position the spindle and the brake carrier plate on the steering arm, and then install the retaining cap screws.
2. Install the wheel inner bearing cone on the spindle. Install the wheel hub and drum. Install the driving hub spacer and then the wheel outer bearing cone and adjusting nut.
3. Follow the Procedure under Front Wheel Bearing Adjustment in Part 11-12.
4. Install the driving hub and snap ring. Install the grease cap.

300 THROUGH 900 SERIES

Removal

1. From front wheel spindles, remove the hub and drum attaching parts (axles under 9,000 lbs capacity grease cap and gasket if so equipped, cotter pin, bearing adjusting nut and flat washer). (Axles 9,000 lbs capacity or over-grease cap and gasket, lock nut, dimpled washer, locking ring, and bearing adjusting nut and pin assembly). Then, remove the outer wheel bearing and the hub and drum assembly from the spindle.
2. On rear wheels, remove the rear axle shaft flange retaining nuts and axle shaft. Remove the rear wheel bearing lock nut, lock washer, and adjusting nut, then remove the hub and drum assembly from the axle housing. Discard the grease seal.
3. Remove the brake shoes and adjusting screw from the carrier plate as outlined in this Section. Disconnect the brake line from the brake cylinder and submerge the end of the brake line in a can containing a smal amount of clean brake fluid, This will minimize hydraulic line bleeding.
4. Remove the carrier plate retaining bolts and nuts, then remove the carrier plate from the front wheel spindle or rear axle housing.
5. Remove the attaching bolts and lock washers, and the brake cylinder from the carrier plate.

Installation

1. Assemble the brake cylinder to the backing plate with the attaching bolts and lock washers.
2. Mount the carrier plate to the front wheel spindle or to the rear axle housing flange, and secure with the attaching bolts and nuts.
3. Install the brake shoes and adjusting screw to the carrier plate as outlined in this section. Connect the brake line to the brake cylinder.
4. Install a front wheel hub and drum assembly and the outer wheel bearing to the spindle. Install the hub and drum attaching parts (axle under 9,000 lbs capacity-flat washer, bearing adjusting nut, cotter pin, grease cap, and gasket if so equipped, axles 9,000 lbs capacity or outer bearing adjusting nut and pin assembly, locking ring, dimpled washer, lock nut, and grease cap and gasket). Adjust the front wheel

bearings as outlined in Group 11.

Install a rear wheel hub and drum assembly on the rear axle housing. **The rear hub oil seal must be replaced whenever a hub is removed or installed.** Install the outer bearing and the adjusting nut, then adjust the wheel bearings as outlined in Group 11. Install the lock washer and lock nut, then torque to specifications. Install the rear axle shaft, gasket and attaching nuts, then torque to specifications.

5. Install the wheel and tire.
6. Bleed the hydraulic system and adjust the brake shoes.

BRAKE MASTER CYLINDER

F-100-600, P-350-400 AND L-500-600 SERIES— POWER BRAKE—DASH MOUNTED BOOSTER

Removal

1. With the engine stopped, depress the brake pedal to expell vacuum from the brake booster system.
2. Disconnect the hydraulic lines from the brake master cylinder.
3. Remove the brake booster to master cylinder retaining nuts and lockwashers. Remove the master cylinder from the brake booster.

Installation

1. Before installing the master cylinder, check the distance from the outer end of the booster assembly push rod to front face of the brake booster assemby. Turn the push rod adjusting screw in or out as required to obtain the specified length (Fig. 13).
2. Position the master cylinder assembly over the booster push rod and onto the two studs on the booster assembly. Install the attaching nuts and lockwashers and torque them to specifications.
3. Connect the hydraulic brake system lines loosely to the master cylinder.
4. Bleed the hydraulic brake system as outlined in this section of the manual. Centralize the differential valve as outlined in this Section of the manual. Then, fill the dual master cylinder reservoirs to within 1/4 inch of the top with the specified C6AZ-19542-A brake fluid. Install the gasket (diaphragm) and reservoir cover.

F-100-350 AND P-350-400 SERIES—NON-POWER BRAKE

Removal

Refer to Figure 14.

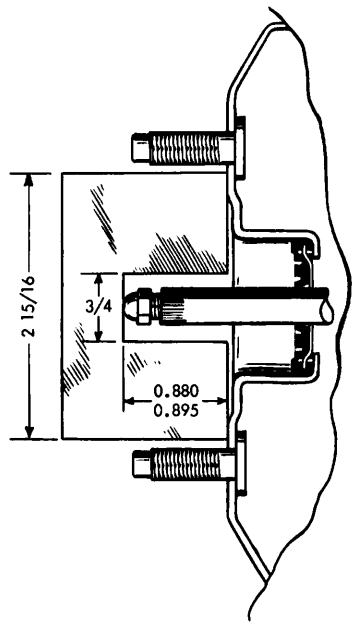

FIG. 13 Bendix Booster Push Rod Gauge Dimensions and Adjustment

1. Working from inside the vehicle below the instrument panel, disconnect the wires from the stop light switch.
2. Disconnect the dust boot from the rear of the master cylinder at the dash panel.
3. Remove the retaining nut, shoulder bolt, spacers and bushing securing the master cylinder push rod and the stop light switch to the brake pedal assembly. Remove the switch.
4. Remove the boot from the master cylinder push rod.
5. Disconnect the brake hydraulic system lines from the master cylinder.
6. Remove the master cylinder to dash panel retaining screws, and remove the master cylinder.

Installation

1. Position the master cylinder assembly on the dash panel within the engine compartment and install the retaining screws and washers. Tighten the screws to specification.
2. Connect the hydraulic brake system lines loosely to the master cylinder.
3. Working from inside the vehicle

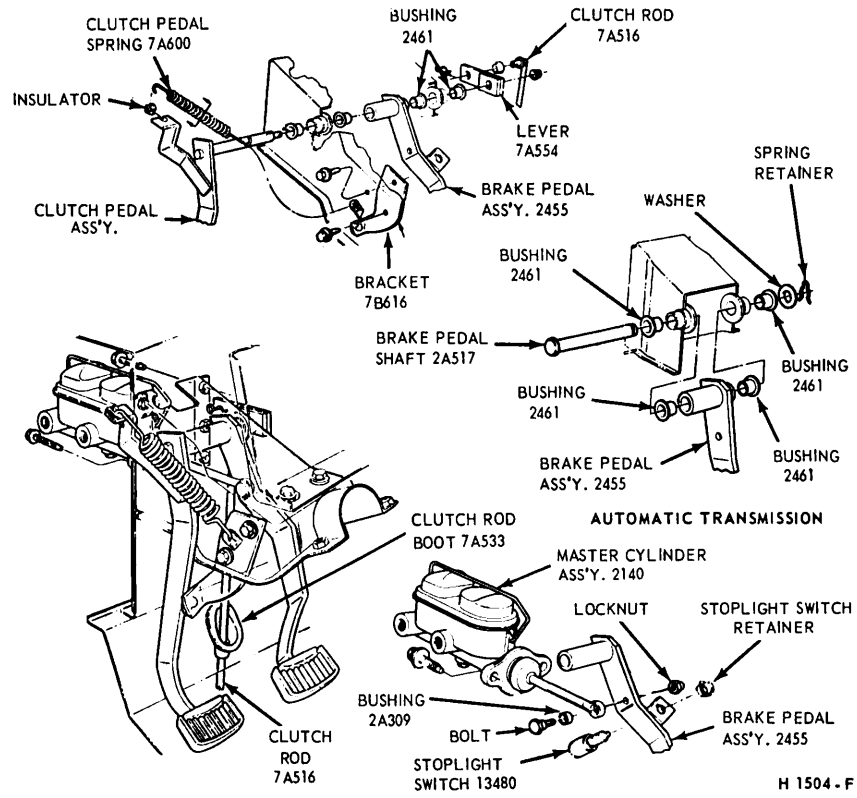

FIG. 14 Dual Master Cylinder and Brake Pedal Installation—Non-Power Brakes—F-100-350

below the instrument panel, position the boot over the push rod and secure the boot to the master cylinder.

4. Lubricate the push rod bushing with lubricant (Lubriplate). Position the bushing in the push rod.
5. Position the stop light switch on the push rod. Install the shoulder bolt and spacers. **Make sure the bushings and spacers are installed properly. Secure the push rod and stop light switch to the brake pedal assembly with the self-locking nut.**
6. Connect the wires to the stop light switch.
7. Bleed the hydraulic brake system as outlined in this section of the manual. Centralize the differential valve as outlined in this Section of the manual. Then, fill the dual master cylinder reservoirs to within 1/4 inch of the top with the specified brake fluid. Install the gasket (diaphragm) and reservoir cover.

ECONOLINE AND BRONCO

Removal

1. Disconnect the wires from the stoplight switch (Fig. 15 and 16).
2. Disconnect the brake hydraulic system lines at the master cylinder.
3. On Bronco models, remove the hair pin retainer and slide the stoplight switch off the brake pedal pin just far enough for the switch outer hole to clear the pin. Remove the stop light switch from the pin.

Econoline models, remove the shoulder bolt and nut retaining the push rod to the brake pedal. Remove the push rod bushing.

4. Slide the master cylinder push rod off the brake pedal pin. Remove the bushings and washers.
5. Remove the master cylinder retaining bolts and remove the master cylinder.

Installation

1. Position the master cylinder assembly on the dash panel and install the retaining bolts. Torque the bolts to specification.
2. Connect the hydraulic brake system lines to the master cylinder.
3. On Bronco models, lubricate the push rod bushing with lubricant (SAE 10W-20W-30). Insert the bushing in the push rod. Coat the washers with the lubricant, and position the push rod and bushing, washers and stop light switch on the brake pedal pin. Install the hair pin type retainer.
4. On Econoline models, lubricate the push rod bushing. Insert the bushing in the push rod and install the shoulder bolt securing the push rod to the brake pedal.
5. Connect the stop light switch wires to the switch.
6. Bleed the hydraulic brake system.

F-500-900, L-500-750 AND LT-800-850 SERIES— SINGLE BRAKE SYSTEM

Removal

If the vehicle is equipped with a vacuum booster, the engine must be stopped and all vacuum must be expelled from the booster system before the hydraulic lines are disconnected.

1. Disconnect the brake line from the brake fitting.
2. Force as much brake fluid as possible from the master cylinder into a suitable container by pushing down the brake pedal all the way several times.
3. On a vehicle with conventional brakes, disconnect the rubber boot from the rear end of the master cylinder in the cab. Remove the bolts that hold the master cylinder against the dash panel, and lift the cylinder away from the push rod and out of the engine compartment.

On vehicles equipped with a dash mounted booster, remove the nuts and washers that secure the master cylinder to the power booster unit, and remove the master cylinder.

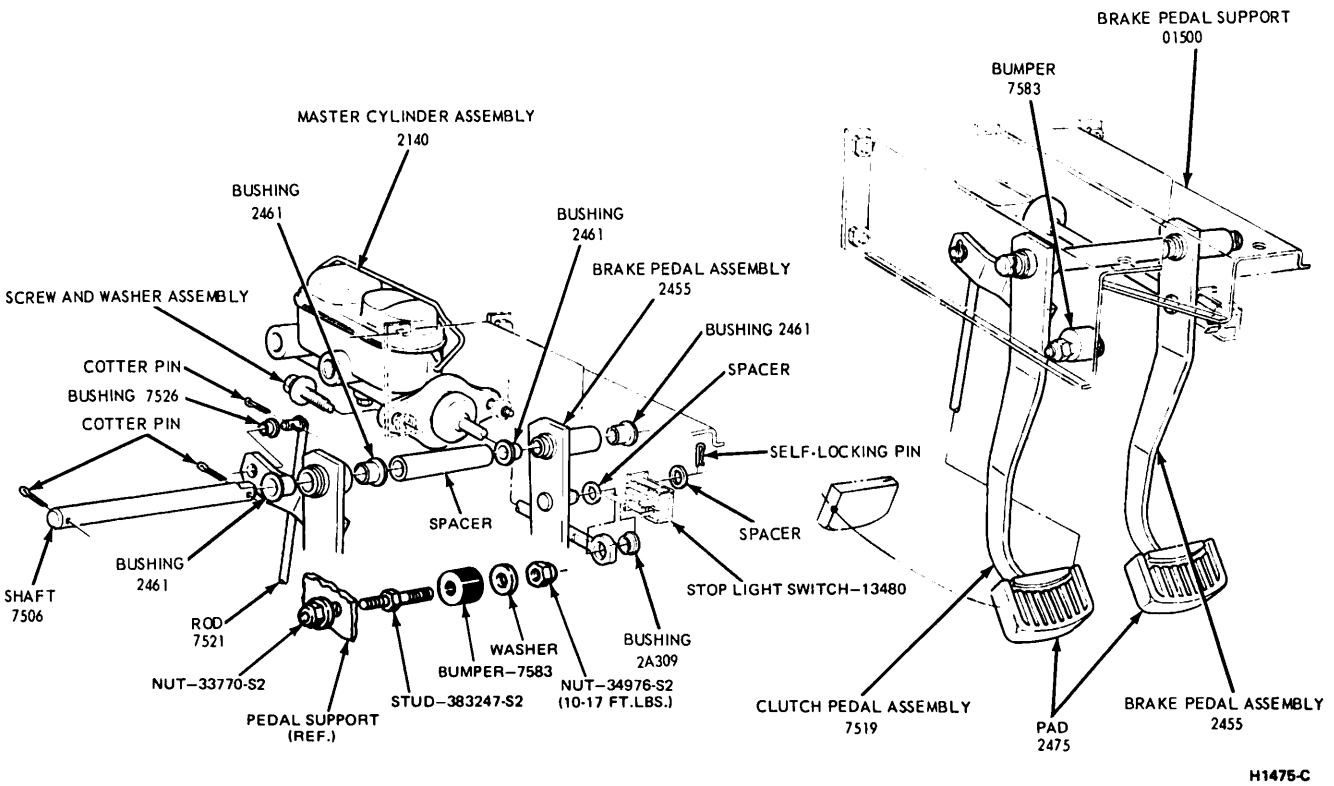

FIG. 15 Brake Master Cylinder and Brake Pedal Installation—Bronco

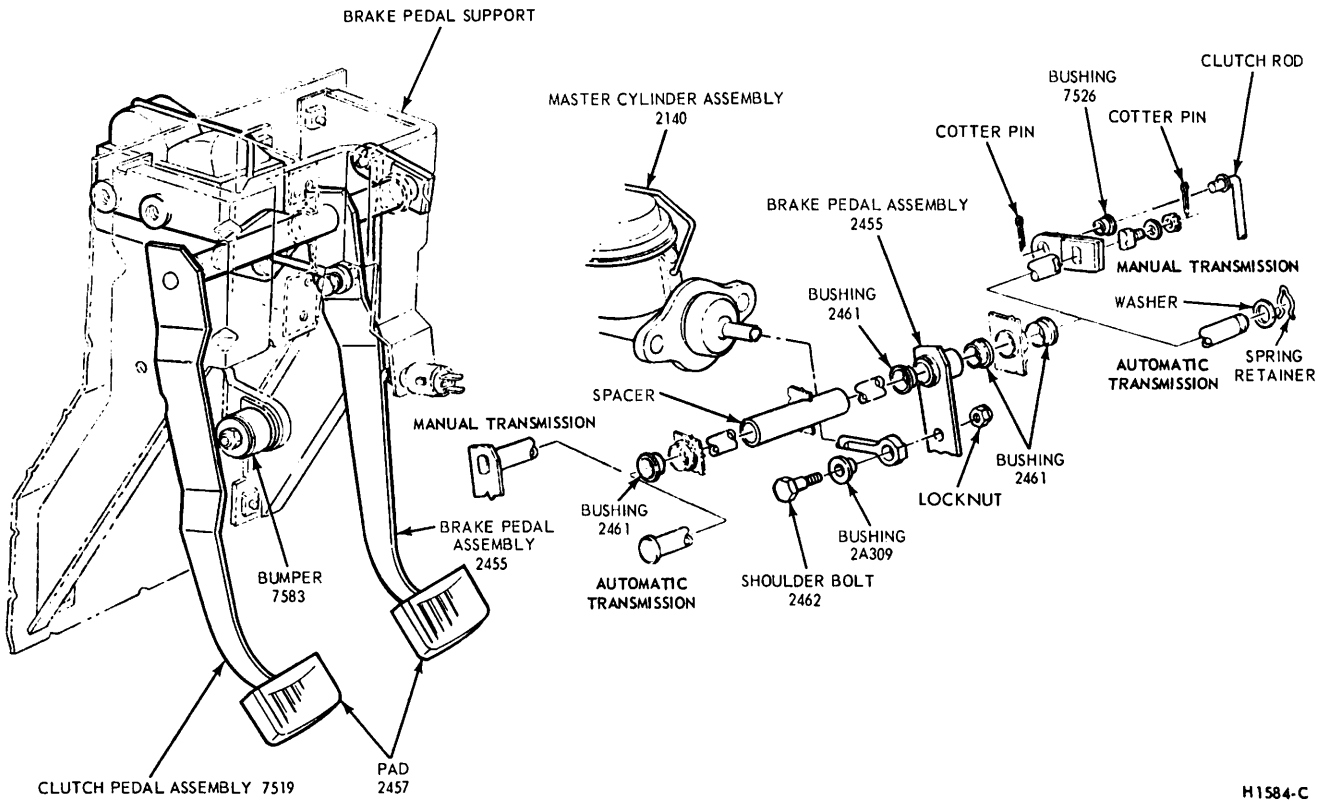

FIG. 16 Brake Master Cylinder and Brake Pedal Installation—Econoline

Installation

1. On a vehicle with conventional brakes, position the rubber boot on the piston push rod, guide the master cylinder over the end of the push rod and position the cylinder against the mounting surface. Install the mounting bolts and torque them to specifications.

On vehicles equipped with a dash-mounted booster, install the master cylinder over the push rod onto the two studs in the power booster body. Install the lock washers and retaining nuts. Torque the nuts to specifications.

2. Connect the brake line to the master cylinder fitting, but leave the brake line fitting loose.
3. Fill the master cylinder reservoir with C6AZ-19542-A extra heavy duty brake fluid to within 1/4 inch of the top of the filler neck.
4. Push the brake pedal down slowly by hand several times to let air escape at the brake line fitting. Hold the pedal down and tighten the brake line fitting. Release the brake pedal. **Do not release the brake pedal until the fitting is tightened as additional air will be introduced into the master cylinder.**

On vehicles equipped with dash-mounted booster, the cylinder can be bled at the bleed screw on the cylinder.

On a vehicle with a frame-mounted brake booster assembly, the master cylinder can be bled at the booster screw(s).

5. After seeing that the master cylinder reservoir is filled with the specified fluid to within 1/4 inch to the top of the filler neck, install the filler cap. Wipe off any fluid from the outside of the cylinder and brake line.
6. Connect the rubber boot to the end of the cylinder.
7. Check and, if necessary, adjust the brake pedal free-travel.

L-, LN-, AND B-SERIES SPLIT BRAKE SYSTEM AND FRAME MOUNTED BOOSTER

Removal

Refer to Figures 17 and 20.

1. Working from inside the vehicle below the instrument panel, disconnect the wires from the stop light switch.
2. On L-and LN-Series, remove the retaining nut, shoulder bolt, spacers and bushing securing the master cylinder push rod and the stop light switch to the brake pedal assembly. Remove the switch.

On B-Series, remove the hair pin clip from the brake pedal pin. Remove the push rod, spacers, stop light switch, and bushing from the brake pedal pin.

3. Remove the boot from the master cylinder push rod.
4. Disconnect the brake hydraulic system lines from the master cylinder.
5. Remove the master cylinder to dash panel retaining screws and remove the master cylinder.

Installation

1. Position the master cylinder assembly on the dash panel within the engine compartment and install the retaining screws and washers. Tighten the screws to specification.
2. Connect the hydraulic brake system lines loosely to the master cylinder.
3. Lubricate the push rod bushing with lubricant (Lubriplate). Position the bushing in the push rod.
4. On L-and LN-Series, position the stop light switch on the push rod, install the shoulder bolt and spacers. **Make sure the bushings and spacers are installed properly. Secure the push rod and stop light switch to the brake pedal assembly with the self-locking nut.**

On B-Series, install the spacers, push rod, bushing and stop light switch on the brake pedal pin. Install the hair pin retainer.

5. Connect the wires to the stop light switch.
6. Bleed the hydraulic brake system as

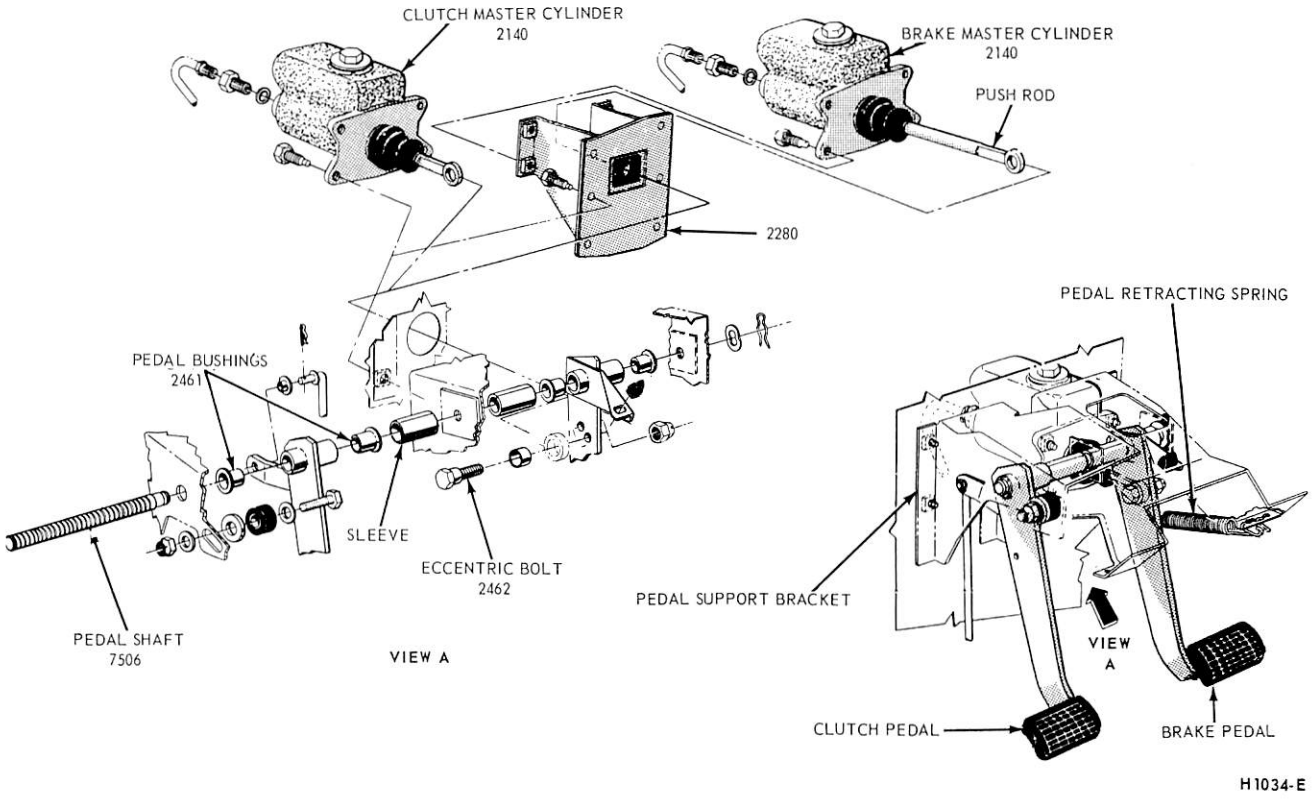

FIG. 17 L-, LN-, or LT-Series Brake Pedal and Related Parts

outlined in this section of the manual. Centralize the differential valve as outlined in this section of the manual. Then, fill the dual master cylinder reservoirs to within 1/4 inch of the top with C6AZ-19542-A extra heavy duty brake fluid. Install the gasket (diaphragm) and filler cap.

C-SERIES SINGLE BRAKE SYSTEM

Removal

If the vehicle is equipped with a vacuum or air booster, the engine must be stopped and all vacuum or air pressure must be expelled from the booster system before the hydraulic lines are disconnected.

1. Roll back the floor mat, remove the floor plate, and then disconnect the hydraulic line from the master cylinder.
2. Force as much brake fluid as possible from the master cylinder into a suitable container by pushing down the brake pedal all the way several times.
3. Disconnect the rubber boot from the rear end of the master cylinder in the cab.
4. Remove the two mounting bolts and lower the master cylinder away from the push rod and out of the cab.

Installation

1. With the rubber boot on the piston push rod, guide the master cylinder over the end of the push rod, and position the cylinder against the mounting surface. Install the mounting bolts, and torque them to specifications.
2. Connect the brake line to the master cylinder fitting, but leave the brake line fitting loose.
3. Fill the master cylinder reservoir with the specified brake fluid to within 1/4 inch of the top of the filler neck.
4. Push the brake pedal down slowly by hand. Hold the pedal down and tighten the brake line fitting. Release the brake pedal. **Do not release the brake pedal until the fitting is tightened as additional air will be introduced into the master cylinder. Repeat this procedure until air ceases to escape at the fitting and a firm pedal is obtained.**

On a vehicle with a brake booster assembly, the master cylinder can be bled at the booster bleed screw(s).

5. After seeing that the master cylinder reservoir is filled with the specified C6AZ-19542-A extra heavy duty brake fluid to within 1/4 inch of the top of the filler neck, install the filler cap. Wipe off any fluid from the outside of the cylinder and brake line.
6. Connect the rubber boot to the end of the cylinder. Install the floor plate and secure with the seven retaining screws, and place the floor mat in its proper position.
7. Check and, if necessary, adjust the brake pedal free-travel.

C-SERIES—SPLIT BRAKE SYSTEM

Refer to Figure 18.

All vacuum must be relieved from the booster before hydraulic lines are disconnected.

1. Disconnect the hydraulic lines from the master cylinder. Trap the fluid drip with a shop towel or plug the ports.
2. Remove the bolt and nut connecting the push rod to the brake pedal bell crank and remove the stop light switch, bushing and spacers.
3. Remove the master cylinder mounting bolts and remove the master cylinder from the vehicle.

Installation

Refer to Figure 18.

1. If the master cylinder is being replaced, transfer the outlet ports to the new master cylinder.
2. Position the master cylinder to the

dash panel and install the mounting bolts.
3. Assemble the stop light switch, bushing and spacers on the push rod and install the bolt connecting the push rod to the bell crank.
4. Connect the primary and secondary outlet tubes and tighten to specifications.
5. Bleed the brake system.

DUAL BRAKE MASTER CYLINDER PRESSURE DIFFERENTIAL VALVE ASSEMBLY

Removal

1. Raise the vehicle on a hoist. Disconnect the brake warning light wire from the pressure differential valve assembly switch. **To prevent damage to the brake warning switch wire connector, expand the plastic lugs to allow removal of the shell-wire connector from the switch body.**
2. Disconnect the brake hydraulic lines from the differential valve assembly.
3. Remove the screw retaining the pressure differential valve assembly to the frame side rail and remove the valve assembly.
4. **If the differential valve is to be replaced, remove the brake warning lamp switch and install the switch in the new differential valve. The pressure differential valve assembly and the brake warning lamp switch are separate units and each is serviced as a separate assembly only.**

Installation

1. Mount the pressure differential valve assembly on the frame side rail and tighten the attaching screw.
2. Connect the brake hydraulic system lines to the differential valve assembly and tighten the tube nuts securely.
3. Connect the shell-wire connector to the brake warning lamp switch. **Make sure plastic lugs on the connector hold the connector securely to the switch.**
4. Bleed the brakes and centralize the pressure differential valve as outlined in this Section of the manual.

BRAKE PEDAL ASSEMBLY

F-100-350-SERIES

Removal

Refer to Figure 14.

1. Working inside the vehicle, below the instrument panel, disconnect the wires from the stop light switch.

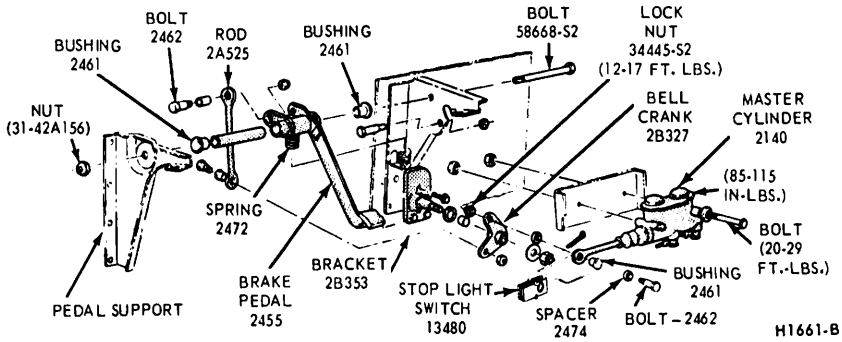

FIG. 18 Dual Master Cylinder and Brake Pedal Installation—C-Series

2. Disconnect the clutch pedal retracting spring and remove the insulators. Remove the retaining nut, shoulder bolt, and bushing securing the push rod to the brake pedal assembly.
3. On an automatic transmission equipped vehicle, remove the retainer, washer, bushings and shaft securing the brake pedal to the support. Remove the brake pedal assembly.
4. On a standard transmission equipped vehicle, remove the cotter pin, nut, washer, bushings and lever securing the brake pedal assembly to the support. Remove the brake pedal assembly.
5. Remove the stop light switch from the bracket on the brake pedal.
6. If required, remove the pedal pad.

Installation

1. If required, install the pedal pad on the brake pedal assembly.
2. Install the stop light switch retainer and the stop light switch in the retainer on the brake pedal.
3. On a standard transmission equipped vehicle, lubricate the bushings with lubricant (Lubriplate).

Insert the bushings in the brake pedal assembly, and install the brake pedal on the shaft. Install the bushings, lever, washer, nut and cotter pin on the shafts.

Install the bushing in the lever. Connect the rod to the lever and install the cotter pin.

4. On an automatic transmission equipped vehicle, lubricate the bushings with lubricant (Lubriplate).

Insert the bushings in the brake pedal assembly. Position the bushing on the shaft. Insert the shaft through the support and the pedal assembly.

Insert the outer bushing on the shaft and install the washer and retainer.

5. Lubricate the push rod bushing with lubricant (Lubriplate). Position the bushing on the push rod.
6. Install the shoulder bolt. Secure the push rod to the brake pedal assembly with the self-locking nut.
7. Connect the wire to the stop light switch.
8. Install the clutch pedal retracting spring insulators and the spring.

BRONCO

Removal

Refer to Figure 15.

1. Disconnect the wires from the stop light switch.
2. Remove the hair pin retainer (Fig. 15) and slide the stop light switch off the brake pedal pin just far enough for the switch outer hole to clear the pin. Remove the stop light switch from the pin.
3. Slide the master cylinder push rod off the brake pedal pin. Remove the bushing and washers.
4. Remove the cotter pin from the right side of the brake and clutch pedal shaft.
5. Slide the shaft toward the left, just enough to allow removal of the brake pedal and two brake pedal bushings.

Installation

1. **Coat the brake pedal bushings and the shaft with lubricant (Oil SEA 10W-20W-30).**
2. Position the bushings, pedal and shaft on the brake pedal support and install the retaining cotter pin (Fig. 15). Spread the cotter pin ends.
3. Lubricate the master cylinder push rod bushing with the lubricant. Insert the bushing in the push rod. Coat the washers with the lubricant, and position the push rod and bushing, washers and stop light switch on the brake pedal pin. Install the hair pin type retainer.
4. Connect the wires to the stop light switch.

ECONOLINE

Removal

Refer to Figure 16.

1. Remove the shoulder bolt and nut

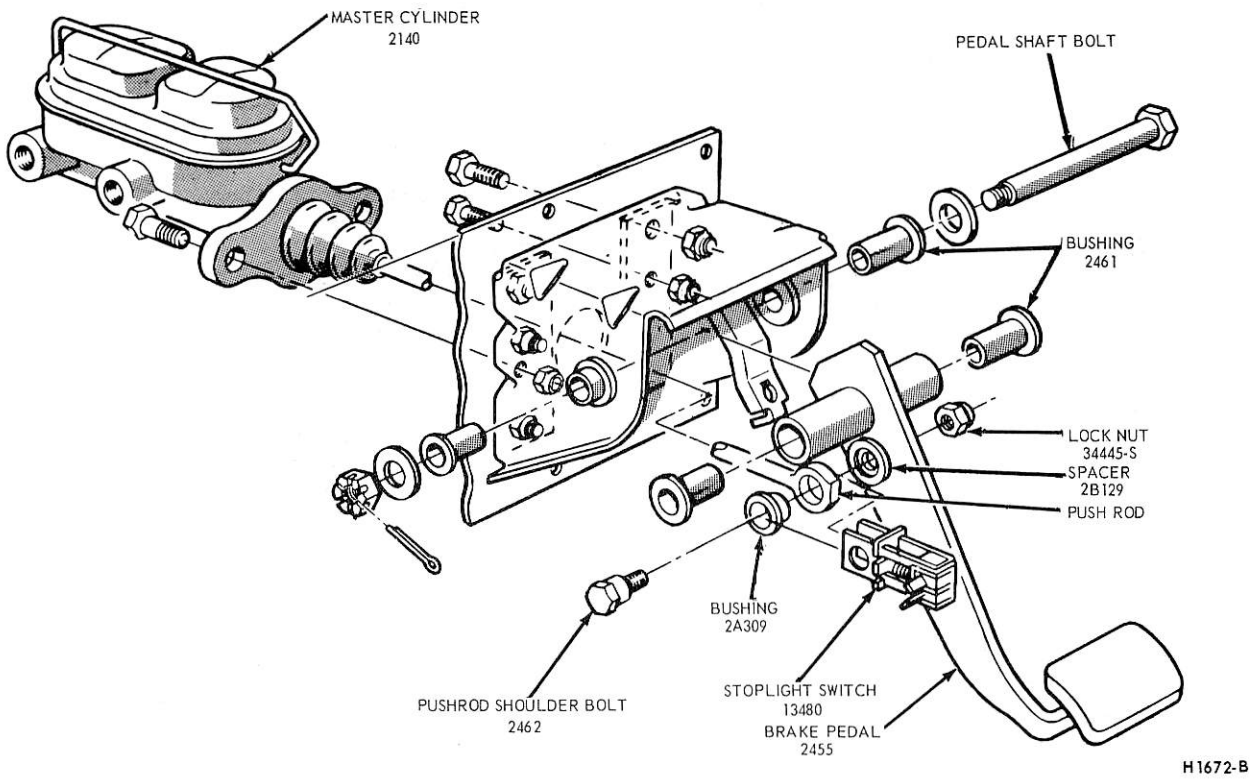

FIG. 19 Brake Pedal and Master Cylinder Installation—P-350-400

retaining the master cylinder push rod to the brake pedal.

2. On models with a manual transmission, remove the clutch lever from the clutch pedal shaft.

On models with an automatic transmission, remove the spring retainer and washer from the right end of the clutch pedal shaft.

3. Slide the shaft toward the left, just enough to allow removal of the brake pedal and two brake pedal bushings.

Installation

1. Coat the brake pedal bushings and the shaft with lubricant (Oil SAE 10W-20W-30).
2. Position the bushings, pedal and shaft on the brake pedal support.

On Models with a manual transmission, install the clutch lever on the clutch pedal shaft.

On Models with an automatic transmission, install the washer and spring retainer on the clutch shaft.

3. Lubricate the master cylinder push rod bushing with the lubricant. Insert the bushing in the push rod. Install the shoulder bolt and nut securing the master cylinder push rod to the brake pedal.

L-500-900, LN-, AND LT-SERIES

Removal

1. Remove the brake pedal retracting spring (Fig. 17).
2. Remove the brake master cylinder push rod eccentric bolt nut, and remove the bolt and two nylon bushings.
3. Remove the nut from the pedal shaft. Then slide the shaft to the left and remove the brake pedal and sleeve.
4. Remove the two bushings from the pedal, and remove the bumper from the pedal extension bracket if so equipped.

Installation

1. Coat all bushings and the pedal shaft with a small quantity of Lubriplate or an equivalent lubricant.
2. Install the bumper on the pedal extension bracket (if so equipped), and position the nylon bushings in the brake pedal shaft bore.
3. Position the brake pedal assembly and sleeve in the pedal support bracket. Slide the pedal shaft through the sleeve and pedal and secure with the nut. Torque the nut to specifications.
4. Position the nylon bushings in the bore of the push rod. Connect the push rod to the brake pedal with the eccentric bolt and nut. Install the pedal retracting spring.

P-350-400-SERIES

Removal

Refer to Figure 19.

1. **Remove the brake master cylinder push rod shoulder bolt nut, and remove the bolt and nylon bushing.**
2. Remove the cotter pin and nut from the pedal shaft. Then slide the shaft to the right and remove the brake pedal sleeve.
3. Remove the two bushings from the pedal and the two bushings from the pedal support.

Installation

1. Coat all bushings and pedal shaft with a small quantity of Lubriplate or an equivalent lubricant.
2. Position the nylon bushings in the brake shaft bore and the support bracket.
3. Position the brake pedal assembly in the pedal support bracket. Slide the pedal shaft through the pedal and secure with the nut. Torque the nut

to specifications. Install the cotter pin.

4. **Position the nylon bushings in the bore of the push rod. Connect the push rod to the brake pedal with the sholder bolt and nut.**

B-SERIES

Removal

1. Remove the brake pedal retracting spring (Fig. 20).
2. Remove the clevis pin retaining clip and remove the pin, spacers, master cylinder push rod bushing and switch assembly.
3. Remove the clip from the pedal shaft. Then slide the shaft to the left and remove the brake pedal.
4. Remove the two bushings from the pedal.

Installation

1. Coat all bushings and the pedal shaft with a small quantity of Lubriplate or an equivalent lubricant.
2. Position the nylon bushings in the brake pedal shaft bore.
3. Position the brake pedal assembly in the pedal support bracket. Slide the pedal shaft through the pedal and secure with the retaining clip.
4. Position the nylon bushing in the bore of the push rod. Connect the push rod, switch assembly and spacers to the brake pedal with the clevis pin and secure with the retaining clip.
5. Install the pedal retracting spring.

C-SERIES

Removal

1. Remove the brake pedal retracting spring (Figs. 18 and 21).
2. Remove the brake master cylinder push rod retaining bolt nut, bolt and nylon bushings.
3. Remove the brake pedal bumper-to-bracket retaining nut. Then remove the bolt and bumper.
4. On models with a single hydraulic brake system, remove the master cylinder push rod by pulling up on the tab on the push rod boot, and remove the push rod and boot from the cylinder.
5. Remove the nut from the bolt, slide the bolt to the right and remove the

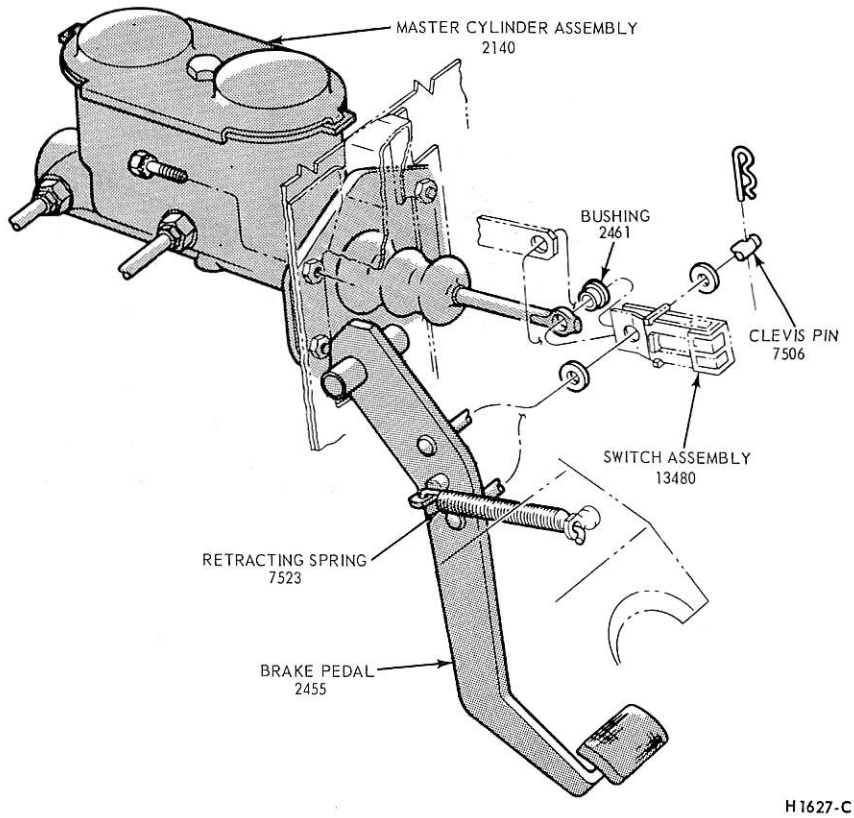

FIG. 20 F-B-Series Brake Pedal and Related Parts

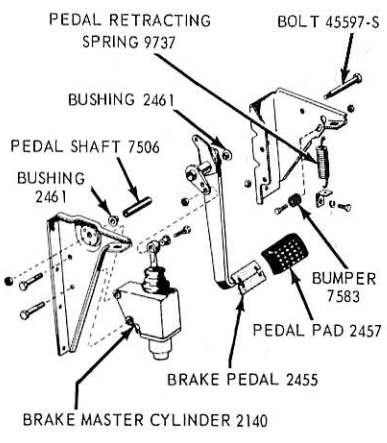

FIG. 21 Single Master Cylinder and Brake Pedal Installation—C-Series

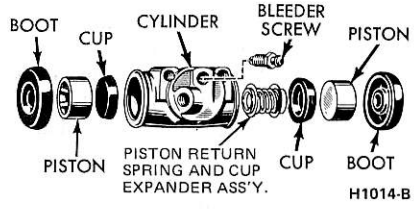

FIG. 22 Double Servo Brake Cylinder

brake pedal assembly, sleeve and bushing.

6. Remove the bushings from the pedal assembly.

Installation

1. Coat all bushings and the pedal shaft with a small quantity of Lubriplate or an equivalent lubricant. Position the nylon bushings in the brake pedal shaft bore.
2. Position the brake pedal assembly

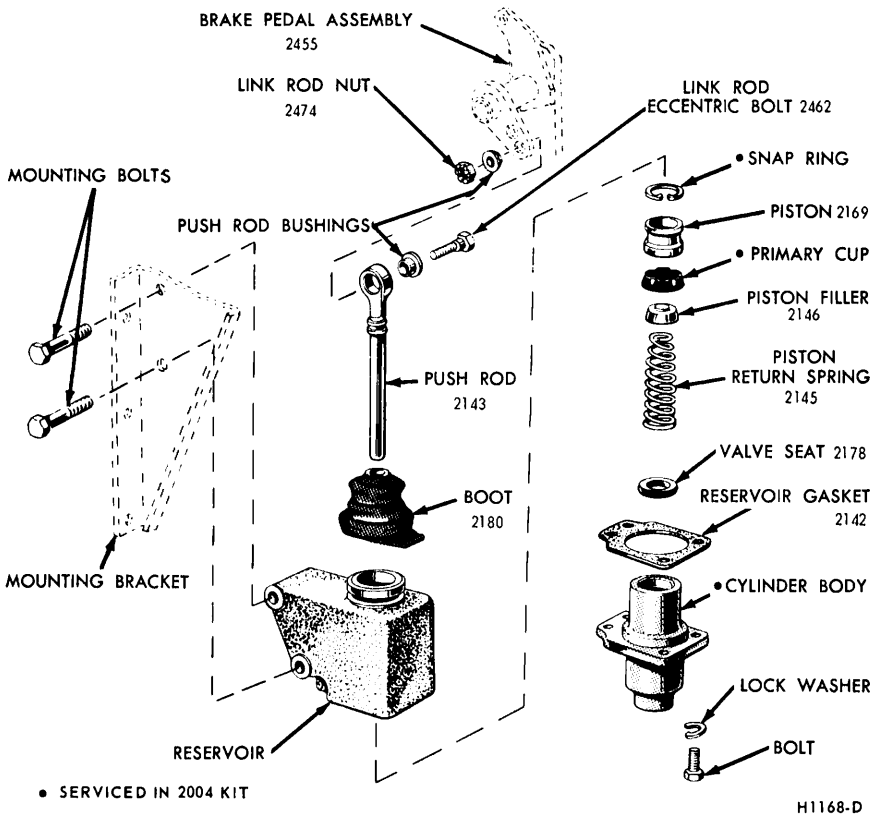

FIG. 23 C-Series Single Brake Master Cylinder

sleeve and bushing in the pedal support bracket, slide the bolt to the left and install the nut. Torque the nut to specifications.
3. On models with a single hydraulic brake system, install the push rod and boot in the master cylinder.
4. On models with a single hydraulic brake system, install the pedal bumper bolt, bumper and nut. Tighten the nut securely.
5. Install the two nylon bushings in the push rod bore, and install the push rod retaining bolt and nut.
6. Install the pedal retracting spring.

OVERHAUL

BRAKE WHEEL CYLINDER

Disassembly

1. With the wheel cylinder removed, remove the rubber boots from the ends of the brake cylinder. Remove the pistons, cups, and piston return spring and piston expander assembly from the cylinder (Fig. 22).
2. Remove the bleeder screw from the cylinder.

Assembly

1. Coat all brake cylinder parts with clean extra heavy duty brake fluid C6AZ-19542-A.
2. Install the bleeder screw (Fig. 22) in the brake cylinder.
3. Place the piston return spring and piston expander assembly, cups, and pistons in the cylinder bore, and install a boot and link over each end of the cylinder, clamp the brake cylinder pistons against the ends of the cylinder. **When a brake cylinder repair kit is used, install all of the parts supplied in the kit.**

MASTER CYLINDER

SINGLE BRAKE SYSTEM

Disassembly

1. With the master cylinder removed, clean the outside of the master cylinder, and remove the filler cap and gasket. Pour out any brake fluid that may remain in the cylinder and reservoir.

On a C-Series truck master cylinder (Fig. 23), remove the 4 bolts that hold the cylinder body on the reservoir, and remove the gasket. Press down on the piston to compress the return spring, and remove the snap ring. Remove the piston, primary cup, piston filler, return spring, check valve, and check valve seat.

On vehicles equipped with a frame mounted vacuum brake booster, the check valve is installed in the booster instead of in the master cylinder.

2. On a L-, LN-, P-, or LT-Series truck master cylinder with a box-shaped reservoir, remove the fitting and gaskets from the forward end of the cylinder. Discard the gaskets. Remove the snap ring from the bore at the rear end of the cylinder, and remove the stop plate, piston cup, spring, check valve, and seat from the cylinder bore. If necessary, blow through the forward bolt hole to remove the parts.

Remove the bolt type fitting from the forward end of the cylinder. Remove the snap ring from the bore at the rear end of the cylinder, and remove the piston, cup, spring, and valve seat. Remove the rubber bumper from the pistons (systems without booster only).

Assembly

1. Dip all parts except the master cylinder body in clean hydraulic brake fluid. **Use only C6AZ-19542-A heavy-duty brake fluid.**
2. On a L-, LN-, P-, LT-Series truck with a box-shaped master cylinder reservoir, install the brake fitting, bolt, and new gaskets on the forward

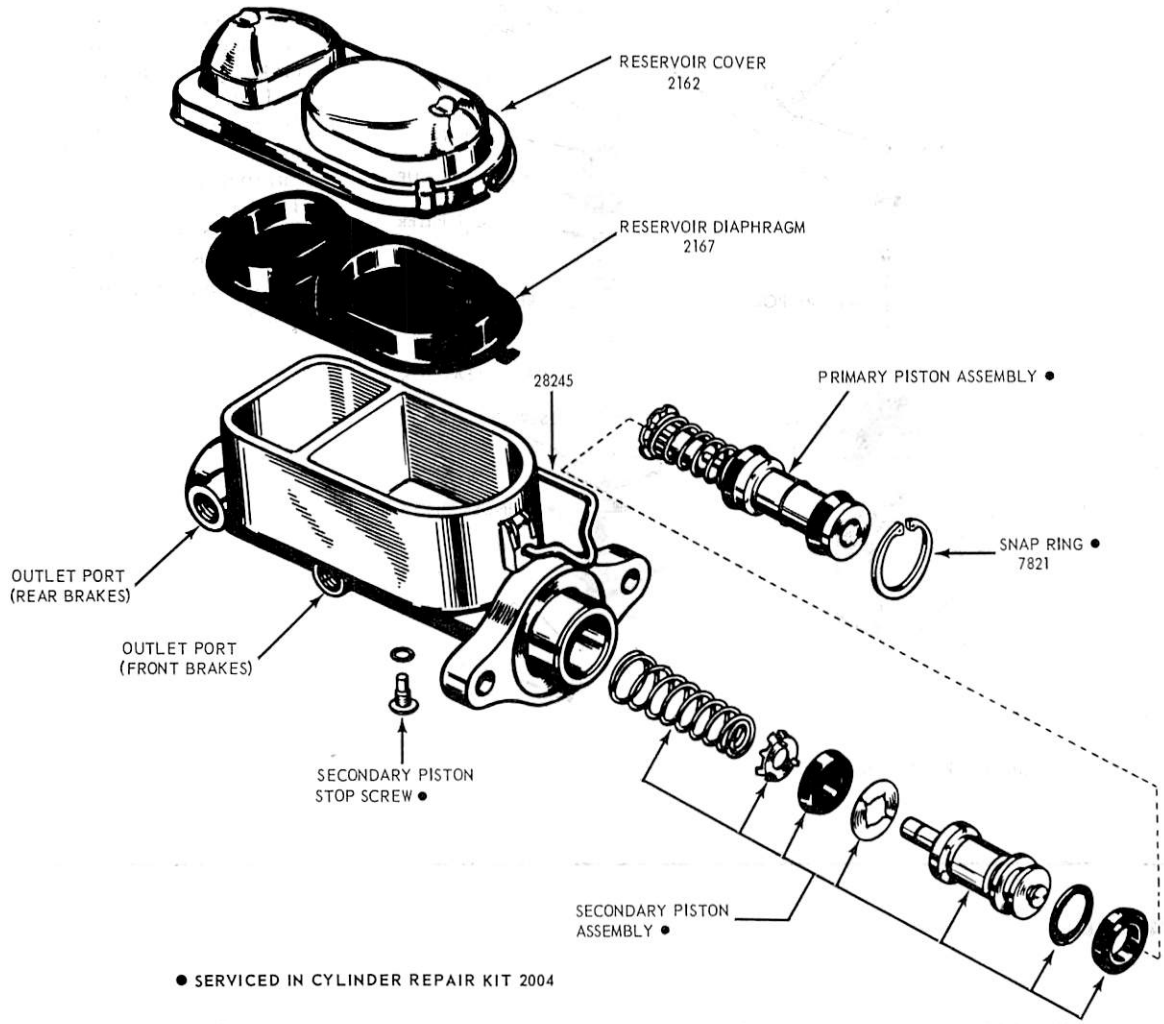

FIG. 24 Dual Master Cylinder Disassembled—F-100-F-350 4 x 2

end of the cylinder. Install the valve seat, valve, spring, cup, piston, and stop plate in the cylinder bore. Install the snap ring in the rear end of the bore.

3. On a C-Series truck master cylinder, install the valve seat, valve, spring, piston filler, cup and piston in the cylinder bore, push down on the piston to compress the spring and install the snap ring in the bore. Position a new gasket over the cylinder body and mount the body to the reservoir. Secure with 4 bolts. Tighten bolts securely.

F-100-350, E-100-300, P-35 AND BRONCO

Refer to Figures 24 and 25.

The master cylinder must be removed from the vehicle to be overhauled.

When a repair is necessary on the master cylinder, it is required practice during the warranty period to replace the cylinder as a unit instead of overhauling the cylinder with a service repair kit.

Disassembly

1. Clean the outside of the master cylinder and remove the filler cap and gasket (diaphragm). Pour out any fluid that remains in the cylinder.
2. Unscrew the piston stop from the bottom of the cylinder body. Remove the O-ring seal from the piston stop. Discard the seal.
3. Remove the push rod boot, if so equipped, from the groove at the rear of the master cylinder and slide the boot away from the rear of the master cylinder.
4. Remove the snap ring (Fig. 26) retaining the primary and secondary piston assemblies within the cylinder body.
5. Remove the push rod (if so equipped) and primary piston assembly from the master cylinder. Discard the piston assembly, including the boot (if so equipped).
6. Apply an air hose to the rear brake outlet port of the cylinder body and carefully blow the secondary piston out of the cylinder body.
7. Remove the return spring, spring retainer, cup protector, and cups from the secondary piston. Discard the cup protector and cups.
8. P-350-400: Place the master cylinder in a vise with the outlet ports up. **Be careful to avoid damage to the master cylinder housing.**
9. P-350-400: Install a spare brake line tube nut in the rear brake outlet port

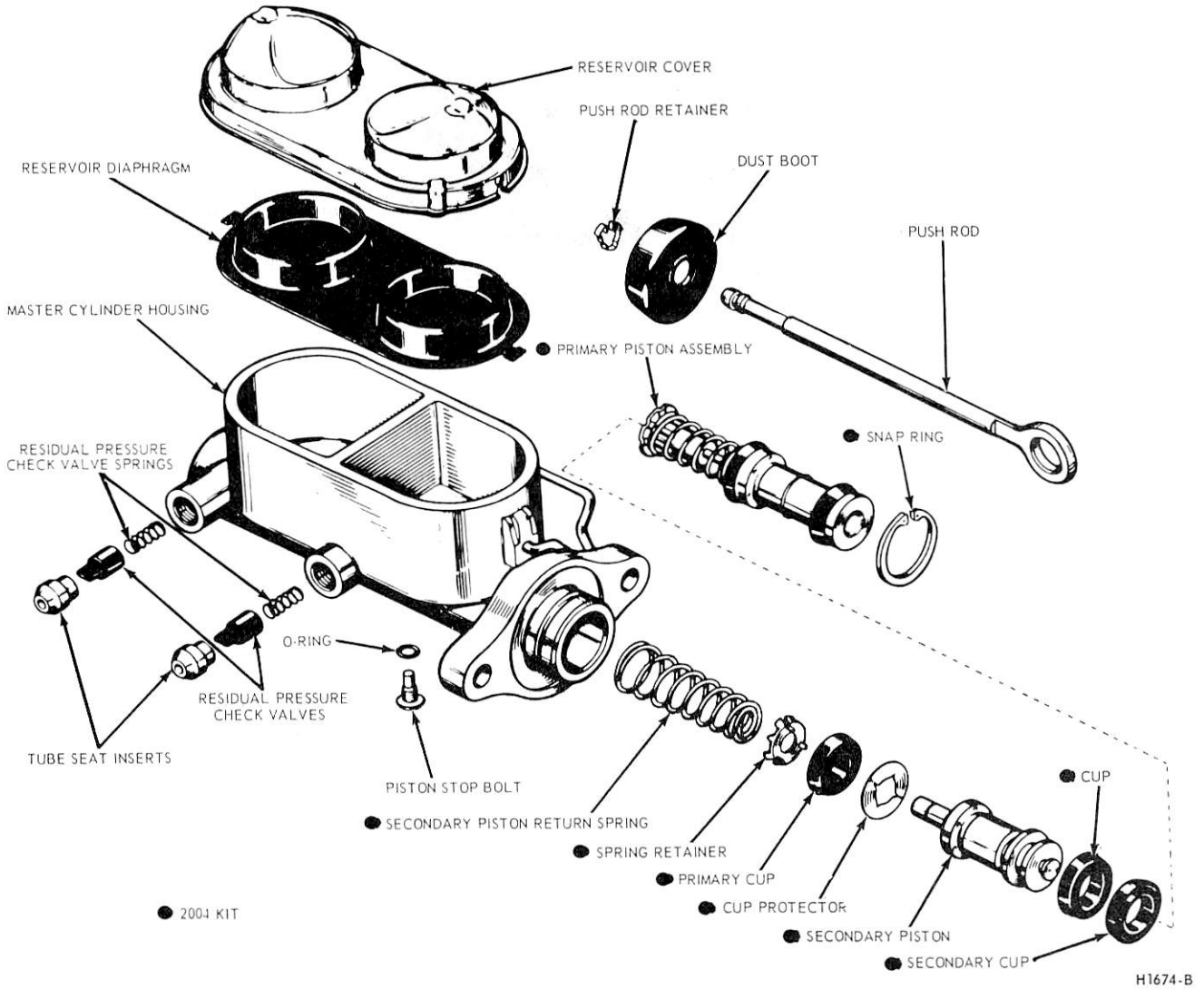

FIG. 25 Dual Master Cylinder Disassembled View—P-350-P-400 Series

(Fig. 27). Place a flat washer on a 1 inch No. 8 x 32 self-tapping screw and thread the screw into the tube seat insert in the port. Hold the screw from turning, and back the tube nut out of the port. This will remove the tube seat insert from the port.

Repeat the same procedure to remove the tube seat insert from the front brake outlet port.

10. P-350-400 ONLY: Remove the master cylinder from the vise, and then remove the residual pressure check valves and check valve springs from the outlet ports (Fig. 25).

Inspection and Repair

1. Clean all parts in clean isopropyl alcohol, and inspect the parts for chipping, excessive wear or damage. Replace them as required. **When**

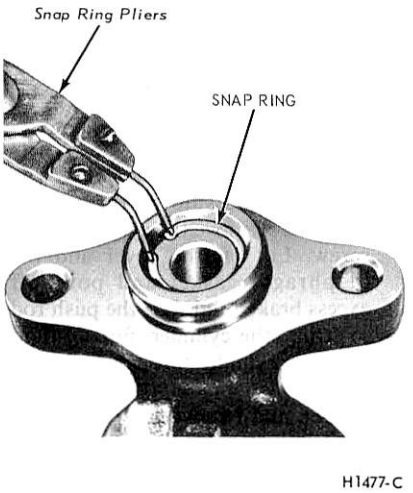

FIG. 26 Removing Snap Ring—Typical

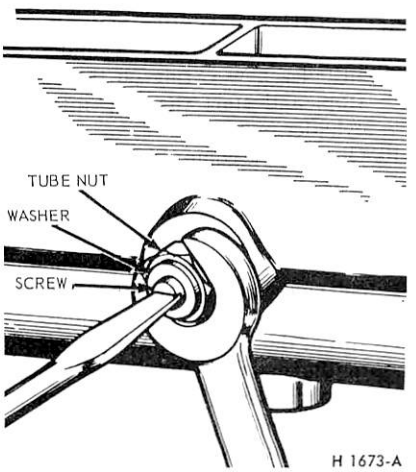

FIG. 27 Removing Residual Check Valve and Tube Seat

using a master cylinder repair kit, install all the parts supplied.

2. Check all recesses, openings and internal passages to be sure they are open and free from foreign matter. Use the air hose to blow out dirt and cleaning solvent. Place all parts on a clean pan or paper.
3. Inspect the hydraulic master cylinder bore for signs of etching, pitting or rust. Replacement of the master cylinder will be required if any of these conditions exist.

Assembly

1. P-350-400: Place the master cylinder in a vise with the outlet ports up. **Be careful to avoid damage to the master cylinder housing.**
2. **P-350-400: Insert a check valve spring in a new residual pressure check valve (P-350-400) and replace the assembly in the rear brake outlet port. Be sure the spring is properly seated in the bottom of the port.**
3. P-350-400: Place a new brass tube seat insert in the port. Be sure the insert is not cocked. Thread a spare brake line tube nut in the port, and turn down the nut until the tube seat insert is bottomed in the port (Fig. 28). Remove the tube nut.
4. Repeat the above procedures at the front brake outlet port.
5. Remove the master cylinder from the vise. Check the outlet ports for brass burrs, and remove the burrs, if present.
6. Dip all the parts except the cylinder body in clean C6AZ-19542-A extra heavy duty brake fluid.
7. Assemble the two secondary cups, back-to-back, in the grooves near the end of the secondary piston. Assemble the cup protector, primary cup, spring retainer and secondary piston return spring on the other end of the secondary piston.
8. Install the secondary piston assembly in the master cylinder.
9. Install a new O-ring on the piston stop, and start the stop into the cylinder body.
10. On a vehicle equipped with standard brakes, position the boot, snap ring and push rod retainer on the push rod. **Make sure the push rod retainer is seated securely on the ball end of the rod.** Seat the push rod in the primary piston assembly.
11. Install the primary piston assembly in the master cylinder. Push the primary piston inward and tighten the secondary piston stop to retain the secondary piston in the bore.
12. On a vehicle equipped with power brakes, position the stop plate and snap ring on the primary piston. Depress the primary piston and install the snap ring in the cylinder body.
13. On a vehicle equipped with standard brakes, press the push rod and pistons inward and install the snap ring in the cylinder body.
14. Bleed the master cylinder.

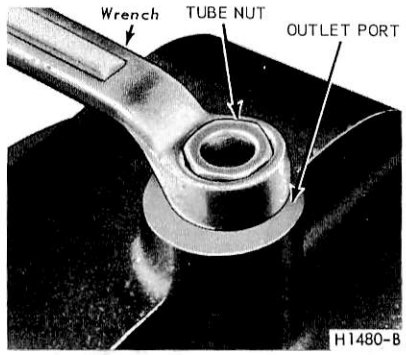

FIG. 28 Installing Residual Check Valve and Tube Seat

Bleeding the Master Cylinder

Before the master cylinder is installed on the vehicle, the unit should be bled.

1. Support the master cylinder body in a vise, and fill both fluid reservoirs with C6AZ-19542-A extra heavy duty brake fluid.
2. Loosely install plugs in the front and rear brake outlet bores. Depress the primary piston several times until air bubbles cease to appear in the brake fluid.
3. Tighten the plugs and attempt to depress the piston. **The piston travel should be restricted after all air is expelled.**
4. Remove the plugs. Install the cover and gasket (diaphragm) assembly, and make sure the cover retainer is tightened securely.

500-950 SERIES—SPLIT HYDRAULIC BRAKES AND FRAME MOUNTED BOOSTER

Disassembly

Refer to Figure 29.

1. Clean the outside of the master cylinder. Remove the cylinder cover screw. Lift off the cover and the diaphragm gasket and pour off excess brake fluid. Use the push rod to stroke the cylinder, forcing fluid from the cylinder through the outlet ports.
2. Loosen and remove the piston stop screw and gasket from the right hand side of the cylinder.
3. Pull back the push rod boot and remove the snap ring from the groove in the end of the cylinder bore as shown in Fig. 26.
4. Remove the push rod and stop plate from the master cylinder.
5. Remove the internal parts from the master cylinder. If the parts will not slide out loosely assemble the cover plate and seal the primary outlet part, then apply air pressure at the secondary outlet port.

Inspection and Repair

1. Clean all parts in isopropyl alcohol. Inspect the parts for chipping, excessive wear or damage. Replace them as required. **When using a master cylinder repair kit, install all the parts supplied.**
2. Check all recesses, openings and internal passages to be sure they are open and free of foreign matter. Passages may be probed with soft copper wire, 0.020 inch OD, or smaller.
3. Minor scratches or blemishes in the cylinder bore can be removed with crocus cloth or a clean up hone. Do not oversize the bore more than 0.007 inch.

Assembly

Refer to Figure 29.

1. Dip all parts except the master cylinder in clean extra heavy duty C6AZ-19542-A hydraulic brake fluid.
2. Install the rear rubber cup on the secondary piston with the cup lip facing the rear. All other cups face the front or closed end of the cylinder.
3. Assemble and install the secondary piston spring, front cup, and the secondary piston.
4. Install the piston stop screw and gasket, making sure the screw enters the cylinder behind the rear of the secondary piston.
5. Assemble and install the primary piston and push rod parts.
6. Locate the stop plate in the seat in the bore and engage the snap ring into the groove at the rear of the cylinder.
7. Install the push rod boot onto the push rod and groove of the cylinder housing.
8. Bleed the master cylinder.

Bleeding the Master Cylinder

Before the master cylinder is installed on the vehicle, the unit should be bled.

1. Support the master cylinder body in a vise, and fill both fluid reservoirs with C6AZ-19542-A extra heavy duty brake fluid.
2. Loosely install plugs in the front and

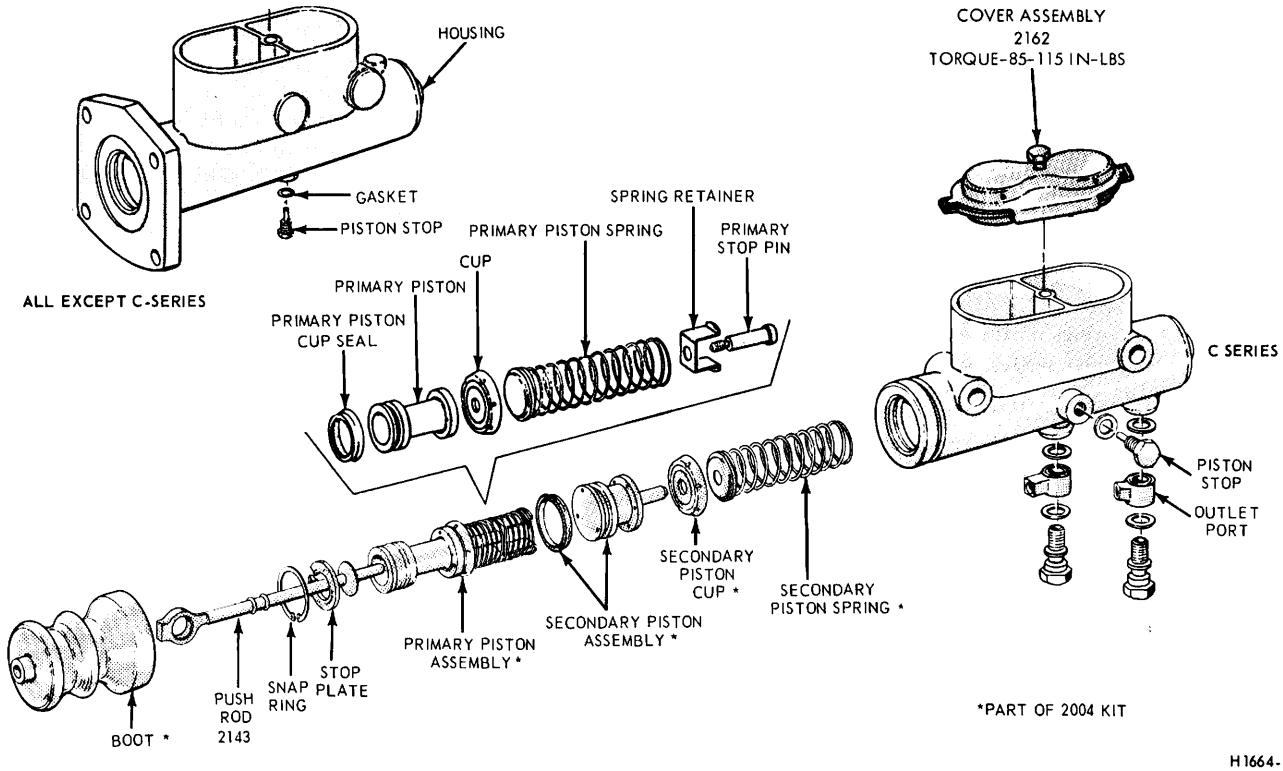

FIG. 29 Dual Master Cylinder—Disassembled View—500-850-Series Truck with Split Hydraulic Brakes and Frame Mounted Booster

rear brake outlet bores. Depress the primary piston several times until air bubbles cease to appear in the brake fluid.

3. Tighten the plugs and attempt to depress the piston. **The piston travel should be restricted after all air is expelled.**
4. Remove the plugs. Install the cover and diaphragm gasket assembly, and make sure the cover screw is tightened securely.

L-AND LN-500-600 SERIES—SPLIT BRAKE SYSTEM AND DASH MOUNTED BOOSTER

Disassembly

Refer to Figure 30.

1. Clean the outside of the cylinder and remove the filler cap and gasket (diaphragm). Pour out any brake fluid that may remain in the reservoir. Stroke the push rod three times to remove fluid from the cylinder bore.
2. Remove the reservoir retainers, washers, and reservoir from the master cylinder body.
3. Remove the two rubber washers from the reservoir and the two O-rings from the reservoir retainers.
4. Remove the snap ring, spring retainer and push rod spring.
5. Unscrew the retainer bushing counterclockwise and remove the push rod, retainer bushing, seal retainer and primary piston from the master cylinder.
6. Remove the primary piston from the push rod and discard it.
7. Remove the seal retainer, and retainer bushing from the push rod. Remove the two lip seals and the two O-rings from the retainer bushing.
8. Unscrew the end cap counterclockwise and remove the end cap and secondary piston assembly from the master cylinder.
9. Remove the snap ring from the secondary piston and remove the piston and return spring from the end cap and stop rod assembly.
10. Remove the two lip seals from the piston.
11. Remove the snap ring from the end cap and remove the secondary piston stop rod, relief port seal spring, the two snap rings and the two split washers from the end cap.
12. Remove the relief port seal from the secondary piston stop rod.
13. Remove the O-rings from the end cap.
14. Remove the primary and secondary port caps and discard.
15. Remove the check valves and springs from the ports.

Assembly

Refer to Figure 30.

1. Wash all metal parts in alcohol before assembly. Dip all parts except the master cylinder body in clean C6AZ-19542-A **extra heavy duty hydraulic brake fluid. When using a master cylinder repair kit, install all of the parts supplied.**
2. Install a new primary piston into the front end of the master cylinder bore. Push the piston through the bore until it is flush with the retainer bushing recess. Use a non-metallic object which will not scratch the bore.
3. Assemble the O-rings and the two lip seals on the retainer bushing. Be sure the lip seals fit into the undercuts in the center of the bushing with their large diameters toward the piston end.
4. Install the retainer bushing onto the closed end of the push rod and push it onto the push rod approximately half way. Be sure the lip seal at the piston end of the retainer bushing remains in the undercut portion of the retainer bushing.
5. Install the seal retainer onto the closed end of the push rod with the

raised lip toward the retainer bushing.
6. Insert the push rod into the master cylinder bore and hook the push rod onto the primary piston.
7. Slide the seal retainer into the recess in the master cylinder bore.
8. Screw the retainer bushing into the master cylinder body and tighten to 15-20 ft-lbs torque.
9. Install the push rod spring with the large end toward the master cylinder and install the spring retainer and snap ring.
10. Install the O-rings on the end cap.
11. Install the relief port seal on the secondary piston stop rod.
12. Place the port seal spring, split washer (largest of two), and snap ring (largest of two) on the piston stop rod.
13. Slide the assembly into the end cap and engage the snap ring into its groove.
14. Install the lip seals on the secondary piston with the large diameters facing outward.
15. Place the secondary piston return spring on the end cap assembly.
16. Compress the spring and place the remaining snap ring and split washer on the piston stop rod.
17. Slide the piston stop rod into the secondary piston and engage the snap ring in its groove.
18. Slide the end cap and piston assembly into the master cylinder bore and screw the end cap into the master cylinder body. Tighten the cap to 15-20 ft-lbs torque.
19. Install washers on the reservoir retainers and place the retainers in the mounting holes of the reservoir.
20. Place the rubber washers and O-rings on the retainers.
21. Place the reservoir and retainer assembly on the master cylinder body and tighten the retainers to 15-20 ft-lbs torque.
22. Replace the springs and check valves in the output ports of the cylinder.
23. Replace the primary and secondary port caps. Tighten to 15-20 ft-lbs torque.
24. Install the mounting seal on the flange of the master cylinder. Install the filler cap and gasket (diaphragm).

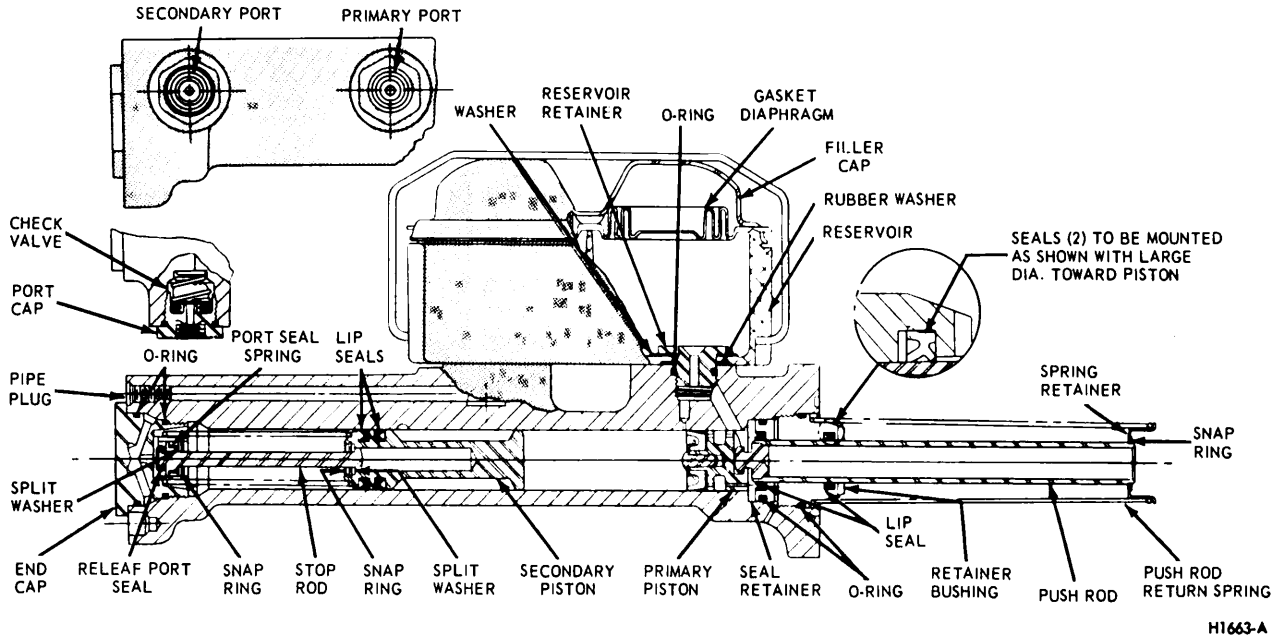

FIG. 30 Dual Master Cylinder—L-500-600, LN-6000, B-500-700 with Midland-Ross Dash-Mounted Booster

SPECIFICATIONS

FRONT HYDRAULIC DRUM BRAKE DIMENSIONS

Truck Series		U-100 4 x 4	E-100	E-200	E-300	F-100 4 x 4	F-250 4 x 4	F-250 4 x 4	P-350- P-400	P-500
Axle Usage	Front	3000	2500 Van 2750 5 Pass.	2750	3300	3300	3300	3500	3800	4700
	Rear	2780-3300	3050	3300	5050	3300 & 3600	5200	5200	5200 & 7400	11000-13000
Type		DSSA	DSSA	DSSA	DSSA	DSSA	DSSA	DSSA	DSSA	SSA
Size (Inches)		11 x 2	10 x 2.50	11-1/32 x 3	12 x 3	11 x 2	12.125 x 2.0	12.125 x 2.0	12.125 x 2.0	13 x 2.25
Cylinder Diameter (Inches)		1.125	1.125	1.125	1.125	1.06	1.062	1.062	1.125	0.937
Lining Thickness (Inches): Primary		0.218	0.1875	0.218	0.1875	0.218	0.250	0.250	0.250	0.250
Secondary		0.281	0.250	0.281	0.250	0.281	0.250	0.250	0.300	0.250
Lining Length (Inches): Primary		10.80	9.00	10.74	11.68	10.80	13.09	13.09	13.09	12.68
Secondary		10.80	11.07	12.29	13.05	10.80	13.09	13.09	13.09	13.95

REAR HYDRAULIC DRUM BRAKE DIMENSIONS

Truck Series		U-100 4 x 4	U-100 4 x 4	E-100	E-200	E-300	F-100	F-100 4 x 4	F-250 6200 GVW (Std)	F-250 4 x 2 RPO F-250 4 x 4 Std	F-350	P-350 (Std)	P-350 (RPO) P-400 (Std)	P-500
Axle Usage	Front	3000	3000	2500 & 2750	2750 & 3000	3000	2750 & 3000	3300	3000	3000 4 x 2 4 x 4 3500 4 x 4 3800	3800	3800	3800	4700
	Rear	2780 T&C	3300 T&C	3050	3300	5050	3300 & 3600	3300 & 3600	5300	5300 (Web Ledge)	7400 (Wed Ledge)	5200 (Web Ledge)	7400 (Web Ledge)	13000
Type		DSSA	DSSA	DSSA	DSSA	DSSA	DSSA	DSSA	DSSA	DSSA	DSSA	DSSA	DSSA	2 Cyl.
Size (Inches)		10 x 2.5	11 x 1.75	10 x 1.75	11-1/32 x 2.25	12 x 2.5	11-1/32 x 2.25	11-1/32 x 2.25	12.125 x 2.0	12 x 2.50	12 x 3.0	12 x 2.5	12 x 3.0 BX	14.125 x 3.50
Cylinder Diameter (Inches)		0.8125	0.8125	0.8125	0.8125	0.875	0.875	0.875	0.9375	0.9375①	1.06	0.9375	1.06	1.50
Lining Thickness (Inches): Primary		0.1875	0.218	0.1875	0.218	0.1875	0.218	0.218	0.250	0.1875	0.1875	0.1875	0.1875	.375
Secondary		0.250	0.281	0.250	0.281	0.250	0.281	0.281	0.250	0.250	0.250	0.300	0.250	.375
Lining Length (Inches): Primary		9.0	10.80	8.48	10.74	11.68	10.74	10.74	13.09	11.68	11.81	11.68	11.81	14.42
Secondary		11.07	10.80	10.88	10.74	13.05	10.74	10.74	13.09	13.05	12.96	13.05	12.96	14.42

① 1.06 Above 6200 GVW

GENERAL TORQUE LIMITS

Unless otherwise specified, the following torque ranges are to be used for fitting or fastener diameters as indicated.

Bolt or Nut Diameter	Torque Range	Bolt or Nut Diameter	Torque Range
1/4"	85-115 Ft-Lbs	9/16"	110-150 Ft-Lbs
5/16"	12-17 Ft-Lbs	5/8"	150-205 Ft-Lbs
3/8"	31-42 Ft-Lbs	3/4"	220-300 Ft-Lbs
7/16"	50-70 Ft-Lbs	7/8"	360-480 Ft-Lbs
1/2"	75-105 Ft-Lbs	1.0"	540-730 Ft-Lbs

SPECIFIC TORQUE LIMITS

Front Brake Backing Plate to Spindle (100–400 Series)	1/2 x 13, 55-70	7/16 x 14, 30–50	1/2 x 20, 55–75
Front Brake Backing Plate and Steering Arm to Spindle (100–400 Series)	1/2 x 13, 30–40	1/2 x 20, 50–70	
Rear Backing Plate to Axle (100–400 Series)	1/2 x 13, 75–105	1/2 x 20, 50–70	7/16 x 14, 35–45
Brake Assembly to Front Axle (500–900 Series)	9/16 x 12, 110–150	1/2 x 13, 75–105	1/2 x 20, 75–105
Brake Assembly to Rear Axle (500–900 Series)	9/16 x 12, 110–150	1/2 x 13, 75–105	1/2 x 20, 75–105
Brake Drum to Hub Nuts or Bolts (500–900 Series)	1/2 x 13, 68–85	5/8 x 18, 136–170	
Master Cylinder or Booster Push Rod to Brake Pedal (500–900 Series)	3/8 x 16, 12–17		
Master Cylinder to Dash Panel (500–900 Series)	5/16 x 18, 12–17	3/8 x 16, 31–42	
Master Cylinder to Booster (Dash Mounted Booster) (500–700 Series)	14–18		
Booster to Dash Panel (Dash Mounted Booster) (500–700 Series)	3/8 x 16, 12–17	3/8 x 24, 13–20	5/16 x 18, 12–15
Master Cylinder to Pedal Bracket	5/16 x 24, 12–15	3/8 x 24, 12–17	
Eccentric Adjuster Bolt Torque	80–120 inch lbs.		

TORQUE LIMITS – HYDRAULIC TUBE NUTS (FT-LBS)

Thread Size	Ft-Lbs. ①	Thread Size	Ft-Lbs. ①
3/8–24	8–15	1/2–20	12–17
7/16–24	12–17	9/16–18	15–25

① All hydraulic line connections (nuts) must be torqued to the specified value and free of fluid leakage.

BRAKE DRUM REPAIR LIMITS (BRAKE LATHE)

Brake drums are marked with the maximum allowable braking surface diameter. If this diameter is exceeded by wear or refinishing, the drum must be replaced.

CH 1878-A

PART 12-05 Drum Brakes — Single Cylinder, Single Piston

Applies to P-500 And B-, LN-Series Trucks with 6000-7000 Lb. Axles

COMPONENT INDEX	Page	COMPONENT INDEX	Page
BRAKE DRUMS		Removal and Installation	05-01
Removal and Installation	05-01	BRAKE WHEEL CYLINDER	
BRAKE BACKING PLATE		Disassembly and Assembly	05-03
Removal and Installation	05-02	Removal and Installation	05-02
BRAKE SHOES			
Adjustment	05-01		

ADJUSTMENTS

BRAKE SHOE ADJUSTMENT

The brake drums should be at normal room temperature, when the brake shoes are adjusted. If the shoes are adjusted when the shoes are hot and expanded, the shoes may drag as the drums cool and contract.

A brake adjustment re-establishes the brake lining-to-drum clearance and compensates for normal lining wear.

FRONT BRAKE

Manual Adjustment

The single anchor brake is adjusted by turning an adjusting screw located between the lower ends of the shoes.

1. Raise the vehicle until the wheels clear the floor.
2. Remove the cover from the adjusting hole at the bottom of the brake carrier plate, and turn the adjusting screw inside the hole to expand the brake shoes until they drag against the brake drum and lock up the drum. Back off the adjusting screw until a slight drag is noted (Fig. 1).



H1006-B

FIG. 1 Single Anchor Brake Shoe Adjustment

3. When the shoes are against the drum, back off the adjusting screw 10 to 12 notches so that the drum rotates freely without drag. If the drum does not rotate freely, remove the wheel and drum, and then blow out the dust and dirt from the linings. With sandpaper, remove all rust from the points where the shoes contact the carrier plate and apply a light coating of high temperature grease (C1AZ-19590-B). Be careful not to get the lubricant on the linings.
4. Install the wheel and drum, and adjust the shoes. Install the adjusting hole cover on the brake backing plate.
5. Check and adjust the other three brake assemblies.
6. Apply the brakes. If the pedal travels more than halfway down between the released position and the floor, too much clearance exists between the brake shoes and the drums. Repeat steps 2 and 3 above.
7. When all brake shoes have been properly adjusted, lower the vehicle. Road test the vehicle and check the operation of the brakes. Perform the road test only when the brakes will apply and the vehicle can be safely stopped.

REMOVAL AND INSTALLATION

BRAKE DRUMS

Since the brake drum service procedures for these models apply to both hydraulic and air brakes, they are covered under Adjustments in Part 12-01.

BRAKE SHOE AND ADJUSTING SCREW

Removal

Refer to Figure 2.

1. Raise the truck until the wheels clear the floor. Then remove the wheel and drum. **Do not push down the brake pedal after the brake drum has been removed.**
2. Clamp the brake cylinder boot against the end of the cylinder, and remove the brake shoe retracting springs from both shoes.

3. Remove the anchor pin plate (Fig. 2).
4. Remove the hold-down spring cups and springs from the shoes, and remove the shoes and the adjusting screw parts from the carrier plate. **Do not let oil or grease touch the brake linings.**
5. Remove the hold-down spring pins from the carrier plate.
6. Remove the adjusting screw parts from the brake shoes.

Installation

1. Coat all points of contact between the brake shoes and the other brake assembly parts with Lubriplate or similar lubricant. Lubricate the adjusting screw threads.
2. Place the adjusting screw, socket, and nut on the brake shoes so that the star wheel on the screw is opposite the adjusting hole in the carrier plate. Then install the adjusting screw spring.
3. Position the brake shoes and the adjusting screw parts on the carrier plate, and install the hold-down spring pins, springs, and cups.
4. Install the anchor pin plate on the pin.
5. Install the brake shoe retracting springs on both shoes, being careful not to bend the hooks or to stretch the springs beyond the attaching points. **The primary shoe spring must be installed first.**
6. Remove the clamp from the brake cylinder boot.
7. Install the wheel and drum.
8. Adjust the brakes, check the brake pedal operation, and lower the truck.

BRAKE WHEEL CYLINDER

Removal

1. Remove the wheel, drum, and brake shoes. Remove the cylinder-to-shoe connecting links.
2. Disconnect the brake line from the brake cylinder.
3. Remove the brake cylinder retaining bolts and lockwashers, and then remove the cylinder from the backing plate.

Installation

1. Position the brake cylinder on the backing plate and install the retaining bolts and lockwashers.
2. Install a new gasket on the brake line fitting and connect the line to the brake cylinder.
3. Install the brake shoes and the connecting links between the shoes and cylinder. Install the drum and the wheel.

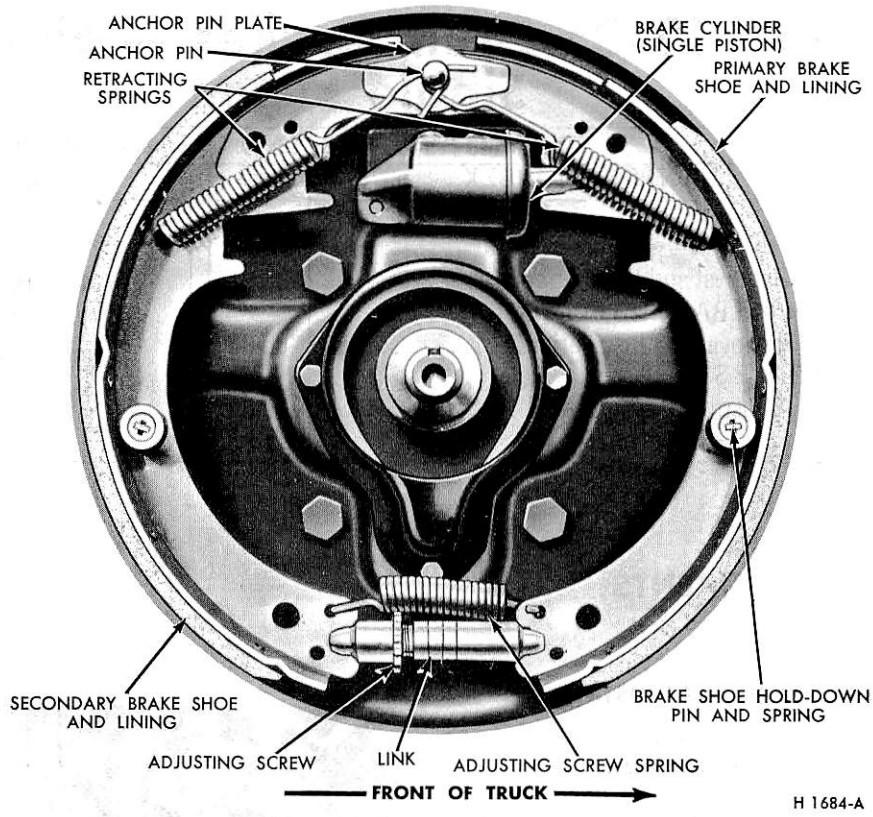

FIG. 2 Single Anchor Brake Shoe—Front—P-500

4. Adjust the brakes and bleed the system. Check the pedal operation before moving the vehicle.

BRAKE BACKING PLATE

Removal

1. From front wheel spindles, remove the hub and drum attaching parts (grease cap and gasket if so equipped, cotter pin, bearing adjusting nut and flat washer). Then, remove the outer wheel bearing and the hub and drum assembly from the spindle.
2. Remove the brake shoes and adjusting screw from the backing plate as outlined in this Section. Disconnect the brake line from the brake cylinder and submerge the end of the brake line in a can containing a small amount of brake fluid. This will minimize hydraulic line bleeding.
3. Remove the backing plate retaining bolts and nuts, then remove the backing plate from the front wheel spindle.
4. Remove the attaching bolts and lockwashers, and the brake cylinder from the backing plate.

Installation

1. Assemble the brake cylinder to the backing plate with the attaching bolts and lockwashers.
2. Mount the backing plate to the front wheel spindle and secure with the attaching bolts and nuts.
3. Install the brake shoes and adjusting screw to the backing plate as outlined in this Section. Connect the brake line to the brake cylinder.
4. Install a front wheel hub and drum assembly and the outer wheel bearing to the spindle. Install the hub and drum attaching parts (flat washer, bearing adjusting nut, cotter pin, grease cap, and gasket if so equipped). Adjust the front wheel bearings as outlined in Group 11.
5. Install the wheel and tire.
6. Bleed the hydraulic system and adjust the brake shoes.

MAJOR REPAIR OPERATIONS

BRAKE WHEEL CYLINDER

Disassembly

1. With the wheel cylinder removed, remove the rubber boot from the end of the brake cylinder. Remove the piston, cup, and piston return spring from the cylinder (Fig. 3).
2. Remove the bleeder screw from the cylinder.

Assembly

1. Coat all brake cylinder parts with clean extra heavy duty brake fluid C6AZ-19542-A.

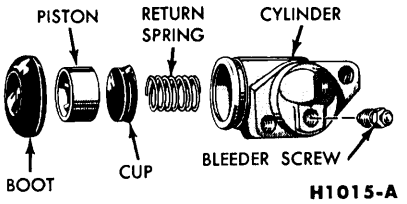

FIG. 3 Single Servo Brake Cylinder—Disassembled

2. Install the bleeder screw (Fig. 3) in the brake cylinder.
3. Place the piston return spring, cup, and piston in the cylinder bore, and install a boot and link over each end of the cylinder, clamp the brake cylinder piston against the end of the cylinder. **When a brake cylinder repair kit is used, install all of the parts supplied in the kit.**

PART 12-08 Drum Brakes — Dual Cylinders, Dual Pistons

Applies to 500 thru 900 Series Trucks

COMPONENT INDEX	Page	COMPONENT INDEX	Page
BRAKE BACKING PLATE		BRAKE PEDALS	
Removal and Installation	08-04	Removal and Installation	08-07
		BRAKE SHOES	
BRAKE MASTER CYLINDERS		Adjustment	08-01
Disassembly and Assembly	08-09	Removal and Installation	08-02
Removal and Installation	08-05	SPECIFICATIONS	08-13

ADJUSTMENTS

BRAKE SHOE ADJUSTMENT

The brake drums should be at normal room temperature, when the brake shoes are adjusted. If the shoes are adjusted when the shoes are hot and expanded, the shoes may drag as the drums cool and contract.

A brake adjustment re-establishes the brake lining-to-drum clearance and compensates for normal lining wear.

Adjustment procedures for each type of brake assembly are given under the applicable heading.

REAR BRAKE — P-500 SERIES

The two-cylinder brake assembly brake shoes are adjusted by turning adjusting wheels reached through slots in the backing plate.

The brake adjustment is made with the vehicle raised. Check the brake drag by rotating the drum in the direction of forward rotation as the adjustment is made.

1. Remove the adjusting slot covers from the backing plate (Fig. 1).
2. Turn the rear (secondary shoe) adjusting screw inside the hole to expand the brake shoe until it drags against the brake drum.
3. Back off the adjusting screw so that the drum rotates freely without drag. Depress the brake pedal to center the brake shoes, and back off the adjusting screw an additional notch to provide operating clearance.
4. Repeat the above procedure on the front (primary) brake shoe.
5. Replace the adjusting hole covers.

SELF ADJUSTING BRAKES — REAR — 500-900 SERIES (EXCEPT P-500)

The brake shoes are automatically adjusted when the vehicle is driven in reverse and the brakes applied. A manual adjustment is required only after the brake shoes have been relined or replaced.

The two-cylinder brake assembly (Figs. 2 and 3) brake shoes are adjusted by turning adjusting wheels reached through slots in the backing plate.

Two types of two-cylinder brake assemblies are used on truck rear wheels. The assemblies differ primarily in the retracting spring hookup, and in the design of the adjusting screws and locks. However, the service procedures are the same for both assemblies.

The brake adjustment is made with the vehicle raised. Check the brake drag by rotating the drum in the direction of forward rotation as the adjustment is made.

1. Remove the adjusting slot covers from the backing plate (Fig. 1).
2. Turn the rear (secondary shoe) adjusting screw inside the hole to expand the brake shoe until a slight drag is felt against the brake drum.
3. Repeat the above procedure on the front (primary) brake shoe.
4. Replace the adjusting hole covers.
5. Complete the adjustment by applying the brakes several times while backing the vehicle.
6. After the brake shoes have been properly adjusted, check the operation of the brakes by making several stops while operating in a forward direction.

If a brake drum will not come off, remove the adjusting slot covers and back off the adjuster screws to free the drum from the shoes.

HYDRAULIC SYSTEM BLEEDING

Refer to Part 12-01 (General Hydraulic Brake Service) for hydraulic system bleeding procedures.

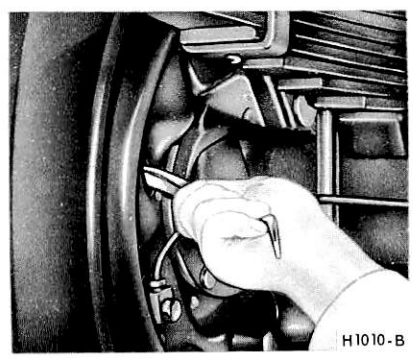

FIG. 1 Two-Cylinder Brake (Rear) Shoe Adjustment

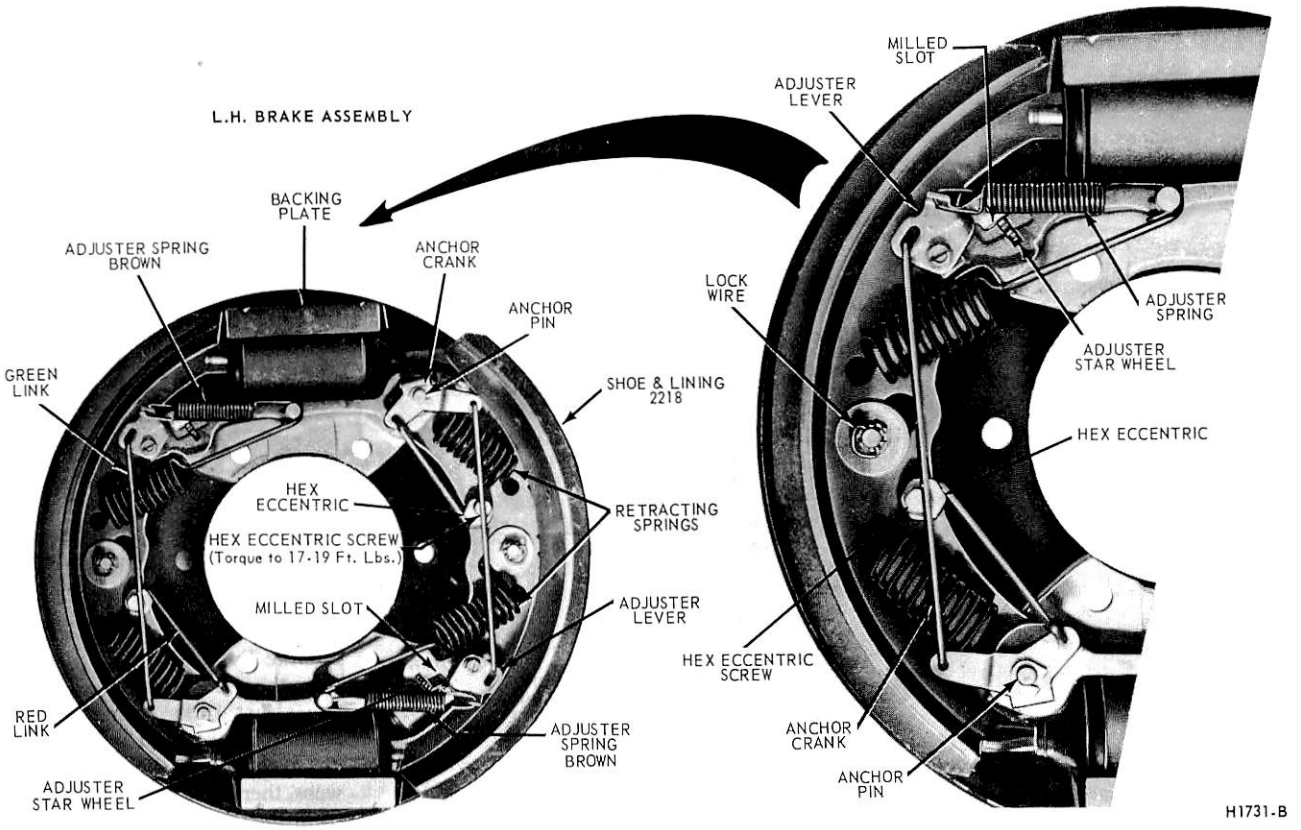

FIG. 2 Two-Cylinder Brake Shoe (Wagner) — Rear

REMOVAL AND INSTALLATION

BRAKE SHOES AND ADJUSTING SCREW

P-500 SERIES — REAR

Removal

Refer to Figure 4.

1. Raise the truck until the wheels clear the floor. Remove the wheel, and then remove the drum or the hub and drum assembly. **Mark the hub and drum to aid assembly in the same position.**
2. Clamp the brake cylinder boots against the ends of the cylinder and remove the four brake shoe retracting springs.
3. Remove the brake shoe guide bolt cotter pin, nut, washer, and bolt from both shoes and remove the shoes from the backing plate.
4. Remove the clamp-type adjusting wheel lock from the anchor pin support, and unthread the adjusting screw and wheel assembly from the anchor pin support.

Installation

1. Coat all points of contact between the brake shoes and other brake assembly parts with high temperature grease (C1AZ-19590-B).
2. Thread the adjusting screw and wheel assembly into the anchor pin support and install the clamp-type adjusting wheel lock. Thread the adjusting wheel into the support so that the brake shoe will rest against the adjusting wheel end.
3. Place the brake shoe against the backing plate, insert the ends in the brake cylinder links, and install the shoe guide bolt, washer and nut (Fig. 4). Finger tighten the nut, then back off one full turn, and install the cotter pin.
4. Install the four retracting springs with the tool shown in Fig. 5.
5. Remove the cylinder clamps, install the drum or the hub and drum assembly, then install the wheel assembly. **Align the marks on the hub and drum during installation.**
6. Adjust the brakes, and lower the truck.

600-900 SERIES—REAR—WAGNER

Removal

1. Raise the truck until the wheels clear the floor. Remove the wheel, and then remove the drum or the hub and drum assembly. It may be necessary to back off the adjusting wheels slightly to free grooved drums. Take care not to back off adjustment so much that adjusting wheel is jammed against the friction ring on the adjuster screw as this may damage the ring.

Mark the hub and drum to aid assembly in the same position. Be sure the engine is stopped and there is no vacuum in the system before disconnecting the hydraulic lines.

2. Unhook the two automatic adjuster springs (Fig. 2). Remove each long adjuster link by pivoting back the adjusting wheel cranks until their

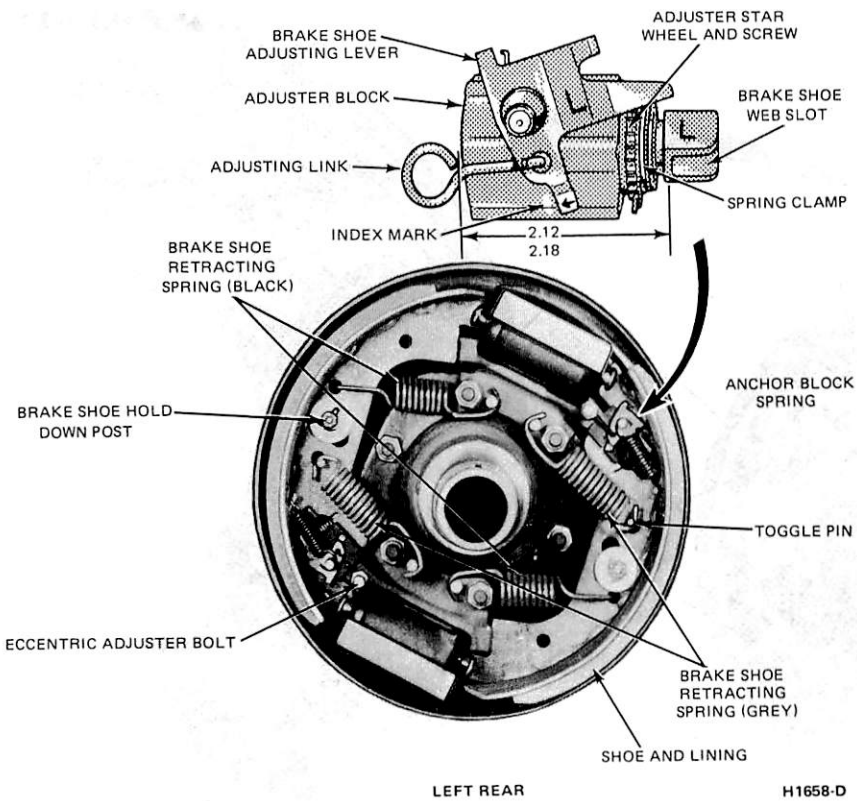

FIG. 3 Hydraulic Brake Assembly (Kelsey-Hayes)

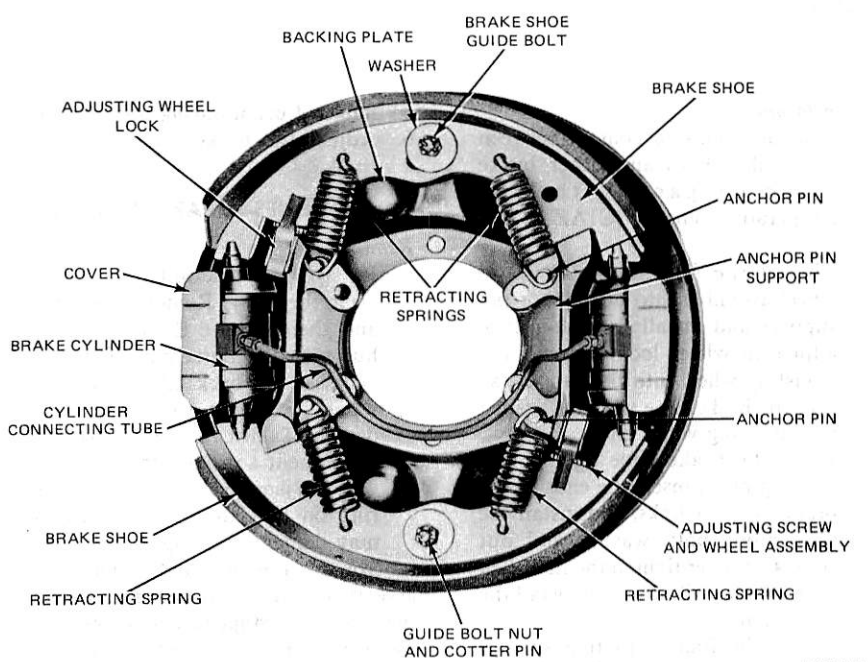

FIG. 4 Two Cylinder Brake—Rear—P-500

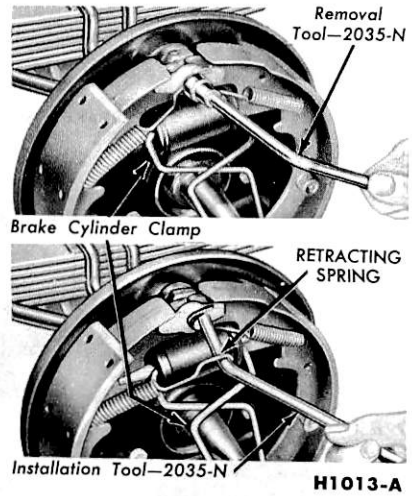

FIG. 5 Retracting Spring Replacement — Typical

slots align with the link hooks. Lift out the links, then slide the hooks from the anchor pin cranks. Remove the short links by rotating the anchor cranks until the link hooks clear the eccentrics on the shoe webs, then remove the smaller hooks from the cranks.

3. Spread the anchor crank C-washers and remove the cranks (it is usually unnecessary to remove the adjusting wheel cranks). If shoes are to be relined, remove adjuster eccentrics from the shoe webs by unscrewing their self-tapping screws.
4. Remove the shoe retraction springs by sliding the looped ends off the pins. Remove the shoe hold-down lock wires, castellated nuts and plain washers and lift the shoes off the backing plate.
5. Unthread the adjusting screw and adjusting wheel from each of the anchor supports.

Installation

1. Insert the adjusting wheels in the anchor support slots and thread in the adjuster screws from the shoe side, friction ring end toward the shoe. For new linings, back off adjusters, taking care not to jam the adjusting wheels. Do not lubricate adjuster screws.
2. Position the shoes (Fig. 2) to the backing plate. Locate shoe with its toe (cutaway portion of web) positioned in the adjuster slot, heel in the anchor pin slot. Install hold-down bolt, plain washer and castellated nut finger tight, then back off nut one turn and install the lockwire.

3. Install the retracting springs in the shoe web, longest end at the adjuster, and hook the springs over the pins.
4. On each shoe web, install the adjuster hex eccentric, tightening the self-tapping screw finger-tight to permit final adjustment of the eccentrics.
5. Position the anchor cranks on the anchor pins with the long end toward the shoes. Install and crimp the C-washers.
6. At each crank, install the short link with the small hook end into the short arm of the crank. Install the other link end around the eccentric on the shoe web.
7. Install the long link S-hook end to the long arm of the crank. Rotate the adjusting wheel crank so that slot lines up with link U-hook end and insert the hook. Rotate the adjusting wheel crank back to the approximate adjusting position.
8. Install the adjuster spring with the short end on the adjusting wheel crank finger and the long end on the upper groove of the spring retainer pin. Center the brake shoe assemblies to the backing plate.
9. Lift the adjuster lever up and away from the star wheel. Then loosen the hex eccentric screw and rotate each hex eccentric until the adjuster lever aligns the adjusting wheel crank pawl with the center line of the adjusting screws. **A milled slot located on the anchor support is the aligning mark.** With the eccentrics adjusted, tighten the self-tapping screws.
10. Install the drum or the hub and drum assembly, then install the wheel assembly. Align the marks on the hub and drum during installation.
11. Bleed the brake system and adjust the brakes. Lower the vehicle.

500-800 SERIES (EXCEPT P-500) — REAR — KELSEY HAYES

Removal

Refer to Figure 3.

1. Raise the truck until the wheel clears the floor.
2. Remove the wheel, hub and drum assembly. Refer to Part 12-01.
3. Clamp the brake cylinder boots against the ends of the cylinder with brake piston clamps.
4. **Note the two different types of brake shoe retracting springs and remove the springs.**
5. Remove the brake shoe hold down post cotter key, nut, and shoe hold down washer.
6. Loosen and remove the eccentric adjuster bolt, lock washer, eccentric and adjusting link.
7. Remove the shoe and lining assembly from the backing plate.
8. Remove the anchor block spring and slide the adjuster assembly from the shoe web.
9. Remove the adjuster star wheel and screw from the adjuster block. Unthread the star wheel from the adjuster screw.

Installation

Refer to Figure 3.

1. Wipe all brake dust from the brake assembly parts with a **clean dry rag. Coat all points of contact between brake shoes and other parts with high temperature grease (C1AZ-19590-B or E).**
2. Coat the adjuster screw and the inside of the adjuster block with high temperature grease (C1AZ-19590-B or E).
3. Thread the adjuster screw onto the star wheel and insert the adjuster screw assembly into the adjuster block. Maintain a 2.12-2.18 inch dimension from the end of the adjuster block to the adjuster screw web slot.
4. Install the adjuster assembly onto the shoe web and attach the anchor block spring.
5. Place the brake shoe over the retracting spring toggle pin and insert the ends of the shoe in the wheel cylinder links.
6. Install the shoe hold down washer and nut. Do not install the cotter pin.
7. Install the four brake shoe retracting springs. Make sure the retracting springs are installed as shown in Fig. 3. On 15 x 5 inch brakes the inner hook ends face the wheel cylinders. On 15 x 4 inch brakes the inner hook ends face the center of the axle.
8. Install the adjusting link, eccentric, lockwasher and adjuster bolt. Do not tighten.
9. Remove the brake piston clamps.
10. Tighten the shoe hold down nut until there is 0.015-0.025 inch clearance between the shoe and hold down washer with the shoe held against the backing plate. Install the cotter pin.
11. Center the shoes on the backing plate. Using a 1/2 inch wrench, rotate the adjuster eccentric until the adjusting lever is at the index mark (Fig. 3). Tighten the eccentric adjuster bolt to specification.
12. Install the wheel, hub and drum assembly.
13. Adjust the brake to obtain a slight drag. Subsequent adjustments will be automatic.

BRAKE WHEEL CYLINDER

Removal

1. Remove the wheel, drum, and brake shoes. Remove the cylinder-to-shoe connecting links.
2. Disconnect the brake lines from the brake cylinders.
3. Remove the brake cylinder retaining bolts and lockwashers, and then remove the cylinder from the backing plate. On the two-cylinder brake assemblies, remove the cover with the brake cylinder.

Installation

1. Position the brake cylinder on the backing plate and install the retaining bolts and lockwashers. Torque the retaining bolts to 150-200 in-lbs. On the two-cylinder brake assemblies, install the cover with the brake cylinder.
2. Install a new gasket on the brake line fitting and connect the line to the brake cylinder.
3. Install the brake shoes and the connecting links between the shoes and cylinder. Install the drum and the wheel.
4. Adjust the brakes and bleed the system. Check the pedal operation before moving the vehicle.

BRAKE BACKING PLATE

300 THROUGH 900 SERIES

Removal

1. From front wheel spindles, remove the hub and drum attaching parts (axles under 9,000 lbs capacity-grease cap and gasket if so equipped, cotter pin, bearing adjusting nut and flat washer) (Axles 9,000 lbs capacity or over-grease cap and gasket, lock nut, dimpled washer, locking ring, and bearing adjusting nut and pin assembly.) Then, remove the outer wheel bearing and the hub and drum assembly from the spindle.
2. On rear wheels, remove the rear axle shaft flange retaining nuts and axle shaft. Remove the rear wheel bearing lock nut, lock washer, and adjusting nut, then remove the hub and drum assembly from the axle housing. Discard the grease seal.
3. Remove the brake shoes and adjusting screw from the backing plate as outlined in this section. Disconnect the brake line from the brake cylinder and submerge the end of the brake line in a can containing

a small amount of brake fluid. This will minimize hydraulic line bleeding.
4. Remove the backing plate retaining bolts and nuts, then remove the backing plate from the front wheel spindle or rear axle housing.
5. Remove the attaching bolts and lock washers, and the brake cylinder from the backing plate.

Installation

1. Assemble the brake cylinder to the backing plate with the attaching bolts and lockwashers.
2. Mount the backing plate to the front wheel spindle or to the rear axle housing flange, and secure with the attaching bolts and nuts.
3. Install the brake shoes and adjusting screw to the backing plate as outlined in this section. Connect the brake line to the brake cylinder.
4. Install a front wheel hub and drum assembly and the outer wheel bearing to the spindle. Install the hub and drum attaching parts (axles under 9,000 lbs capacity-flat washer, bearing adjusting nut, cotter pin, grease cap, and gasket if so equipped, axles 9,000 lbs. capacity or over-bearing adjusting nut and pin assembly, locking ring, dimpled washer, lock nut, and grease cap and gasket). Adjust the front wheel bearings as outlined in Group 11.

Install a rear wheel hub and drum assembly on the rear axle housing. **The rear hub oil seal must be replaced whenever a hub is removed or installed.** Install the outer bearing and the adjusting nut, then adjust the wheel bearings. Install the lock washer and lock nut, then torque to specifications. Install the rear axle shaft, gasket and attaching nuts, then torque to specifications.

5. Install the wheel and tire.
6. Bleed the hydraulic system and adjust the brake shoes.

BRAKE MASTER CYLINDER

500-600 SERIES—POWER BRAKE—DASH MOUNTED BOOSTER

Removal

1. With the engine stopped, depress the brake pedal to expell vacuum from the brake booster system.
2. Disconnect the hydraulic lines from the brake master cylinder.
3. Remove the brake booster to master cylinder retaining nuts and lockwashers. Remove the master cylinder from the brake booster.

Installation

1. Before installing the master cylinder, check the distance from the outer end of the booster assembly push rod to front face of the brake booster assembly. Turn the push rod adjusting screw in or out as required to obtain the specified length (Fig. 6).
2. Position the master cylinder assembly over the booster push rod and onto the two studs on the booster assembly. Install the attaching nuts and lockwashers and torque them to specifications.
3. Connect the hydraulic brake system lines loosely to the master cylinder.
4. Bleed the hydraulic brake system as outlined in this section of the manual. Centralize the differential valve as outlined in this Section of the manual. Then, fill the dual master cylinder reservoirs to within 1/4 inch of the top with the specified C6AZ-19542-A brake fluid. Install the gasket (diaphragm) and filler cap.

F-500-750, C-600-900 SERIES—SINGLE-BRAKE SYSTEM

Removal

The engine must be stopped and all vacuum must be expelled from the booster system before the hydraulic lines are disconnected.

1. Disconnect the stoplight switch wires from the switch, and disconnect the brake line from the brake fitting.
2. Force as much brake fluid as possible from the master cylinder into a suitable container by pushing down the brake pedal all the way several times.
3. On a vehicle with a frame-mounted booster disconnect the rubber boot from the rear end of the master cylinder in the cab. Remove the bolts that hold the master cylinder against the dash panel, and lift the cylinder away from the push rod and out of the engine compartment.

On vehicles equipped with a dash-mounted booster, remove the nuts and washers that secure the master cylinder to the power booster unit, and remove the master cylinder.

Installation

1. On a vehicle with a frame-mounted booster, position the rubber boot on the piston push rod, guide the master cylinder over the end of the push rod and position the cylinder against the mounting surface. Install the mounting bolts and torque them to specifications.

On vehicles equipped with a dash-mounted booster, install the master cylinder over the push rod onto the two studs in the power booster body. Install the lockwashers and retaining nuts. Torque the nuts to specifications.

2. Connect the brake line to the master cylinder fitting, but leave the brake line fitting loose.
3. Fill the master cylinder reservoir with C6AZ-19542-A extra heavy duty brake fluid to within 1/4 inch of the top of the filler neck.
4. Push the brake pedal down slowly by hand several times to let air escape at the brake line fitting. Hold the pedal down and tighten the brake line fitting. Release the brake pedal. **Do not release the brake pedal until the fitting is tightened as additional air will be introduced into the master cylinder.**

On vehicles equipped with dash-mounted booster, the cylinder can be bled at the bleed screw on the cylinder.

On a vehicle with a frame-mounted brake booster assembly, the master cylinder can be bled at the booster bleed screw(s).

5. After seeing that the master cylinder reservoir is filled with the specified brake fluid to within 1/4 inch of the top of the filler neck, install the filler cap. Wipe off any fluid from the outside of the cylinder and brake line.
6. Connect the stoplight switch wires to the switch.
7. Connect the rubber boot to the end of the cylinder.
8. Check and, if necessary, adjust the brake pedal free-travel.

L-, LN-, AND B-SERIES SPLIT BRAKE SYSTEM AND FRAME MOUNTED BOOSTER

Removal

Refer to Figures 7 and 8.

1. Working from inside the vehicle below the instrument panel, disconnect the wires from the stop light switch.
2. On L-and LN-Series, remove the retaining nut, shoulder bolt, spacers and bushing securing the master cylinder push rod and the stop light switch to the brake pedal assembly. Remove the switch.

On B-Series, remove the hair pin clip from the brake pedal pin. Remove the push rod, spacers, stop light switch, and bushing from the brake pedal pin.

3. Remove the boot from the master cylinder push rod.
4. Disconnect the brake hydraulic system lines from the master cylinder.
5. Remove the master cylinder to dash panel retaining screws and remove the master cylinder.

Installation

1. Position the master cylinder assembly on the dash panel within

the engine compartment and install the retaining screws and washers. Tighten the screws to specification.
2. Connect the hydraulic brake system lines loosely to the master cylinder.
3. Lubricate the push rod bushing with lubricant (Lubriplate). Position the bushing in the push rod.
4. On L-and LN-Series, position the stop light switch on the push rod, install the shoulder bolt and spacers. **Make sure the bushings and spacers are installed properly.** Secure the push rod and stop light switch to the brake pedal assembly with the selflocking nut.

On B-Series, install the spacers, push rod, bushing and stop light switch on the brake pedal pin. Install the hair pin retainer.

5. Connect the wires to the stop light switch.
6. Bleed the hydraulic brake system as outlined in this section of the manual. Centralize the differential valve as outlined in this Section of the manual. Then, fill the dual master cylinder reservoirs to within 1/4 inch of the top with C6AZ-19542-A extra heavy duty brake fluid. Install the gasket (diaphragm) and filler cap.

P-500 SERIES

Removal

1. The engine must be stopped and all vacuum must be expelled from the booster system before the hydraulic lines are disconnected.
2. Turn the front wheels all the way to the left, and remove the fender apron attaching screws so that the apron can be moved to provide access to the master cylinder.
3. Disconnect the stoplight switch wires from the switch.
4. Disconnect the brake line from the brake tube fitting.
5. Force as much brake fluid as possible from the master cylinder into a suitable container by pushing down the brake pedal all the way several times.
6. Disconnect the rubber boot from the end of the master cylinder.
7. Remove the brake pedal return spring, remove the cotter pin from the clevis pin, and remove the master cylinder push rod and boot. Remove the three mounting bolts and remove the master cylinder from the mounting bracket and away from the vehicle.

Installation

1. Assemble the master cylinder to the mounting bracket and secure with the three mounting bolts. Install the push rod and boot to the front of the master cylinder. Connect the front end of the push rod to the upper holes of the brake pedal extension with the clevis pin, and secure with a cotter pin. Install the brake pedal retracting spring.
2. Connect the brake line to the master cylinder fitting, but leave the brake line fitting loose.
3. Fill the master cylinder with extra heavy-duty brake fluid C6AZ-19542-A to the specified level (1/4 inch from the top).
4. Push the brake pedal down slowly by hand several times to let air escape at the brake line fitting. Hold the pedal down and tighten the brake line fitting. Do not release the brake pedal until the fitting is tightened, as additional air will be introduced into the master cylinder. Repeat this procedure until air ceases to escape at the fitting and a firm pedal is obtained.
5. After seeing that the master cylinder reservoir is filled with the specified C6AZ-19542-A extra heavy duty brake fluid to within 1/4 inch of the top of the reservoir, install the filler cap. Wipe off the fluid from the outside of the cylinder and brake line.
6. Connect the stoplight switch wires to the switch.
7. Connect the rubber boot to the end of the cylinder. Reposition the fender apron and secure with the five retaining bolts.
8. Check and, if necessary, adjust the brake pedal free travel.

C-SERIES SINGLE BRAKE SYSTEM

Removal

The engine must be stopped and all vacuum must be expelled from the booster system before the hydraulic lines are disconnected.

1. Roll back the floor mat, remove the floor plate, and then disconnect the hydraulic line from the master cylinder.
2. Force as much brake fluid as possible from the master cylinder into a suitable container by pushing down the brake pedal all the way several times.
3. Disconnect the rubber boot from the rear end of the master cylinder in the cab.
4. Remove the two mounting bolts and lower the master cylinder away from the push rod and out of the cab.

Installation

1. With the rubber boot on the piston push rod, guide the master cylinder over the end of the push rod, and position the cylinder against the mounting surface. Install the mounting bolts, and torque them to specifications.
2. Connect the brake line to the master cylinder fitting and tighten the fitting.
3. Fill the master cylinder reservoir with the specified brake fluid to within 1/4 inch of the top of the filler neck.
4. Bleed the brake system.
5. After seeing that the master cylinder reservoir is filled with the specified C6AZ-19542-A extra heavy duty brake fluid to within 1/4 inch of the top of the filler neck, install the filler cap. Wipe off any fluid from the outside of the cylinder and brake line.
6. Connect the rubber boot to the end of the cylinder. Install the floor plate and secure with the seven retaining screws, and place the floor mat in its proper position.
7. Check and, if necessary, adjust the brake pedal free-travel.

C-SERIES — SPLIT BRAKE SYSTEM

Removal

Refer to Figure 9.

All vacuum must be relieved from the booster before hydraulic lines are disconnected.

1. Disconnect the hydraulic lines from the master cylinder. Trap the fluid drip with a shop towel or plug the ports.
2. Remove the bolt and nut connecting the push rod to the brake pedal bell crank and remove the stop light switch, bushing and spacers.
3. Remove the master cylinder mounting bolts and remove the master cylinder from the vehicle.

Installation

Refer to Figure 9.

1. If the master cylinder is being replaced, transfer the outlet ports to the new master cylinder.
2. Position the master cylinder to the dash panel and install the mounting bolts.
3. Assemble the stop light switch, bushing and spacers on the push rod and install the bolt connecting the push rod to the bell crank.
4. Connect the primary and secondary outlet tubes and tighten to specifications.
5. Bleed the brake system.

DUAL BRAKE MASTER CYLINDER PRESSURE DIFFERENTIAL VALVE ASSEMBLY

Removal

1. Raise the vehicle on a hoist. Disconnect the brake warning light wire from the pressure differential

valve assembly switch. **To prevent damage to the brake warning switch wire connector, expand the plastic lugs to allow removal of the shell-wire connector from the switch body.**
2. Disconnect the brake hydraulic lines from the differential valve assembly.
3. Remove the screw retaining the pressure differential valve assembly to the frame side rail and remove the valve assembly.
4. **If the differential valve is to be replaced, remove the brake warning lamp switch and install the switch in the new differential valve. The pressure differential valve assembly and the brake warning lamp switch are separate units and each is serviced as a separate assembly only.**

Installation

1. Mount the pressure differential valve assembly on the frame side rail and tighten the attaching screw.
2. Connect the brake hydraulic system lines to the differential valve assembly and tighten the tube nuts securely.
3. Connect the shell-wire connector to the brake warning lamp switch. **Make sure the plastic lugs on the connector hold the connector securely to the switch.**
4. Bleed the brakes and centralize the pressure differential valve as outlined in this Section of the manual.

BRAKE PEDAL ASSEMBLY

L-, LN-, AND LT-SERIES

Removal

1. Remove the brake pedal retracting spring (Fig. 7).
2. Remove the brake master cylinder push rod eccentric bolt nut, and remove the bolt and two nylon bushings.
3. Remove the nut from the pedal shaft. Then slide the shaft to the left and remove the brake pedal and sleeve.
4. Remove the two bushings from the pedal, and remove the bumper from the pedal extension bracket if so equipped.

Installation

1. Coat all bushings and the pedal shaft with a small quantity of Lubriplate or an equivalent lubricant.
2. Install the bumper on the pedal extension bracket (if so equipped), and position the nylon bushings in the brake pedal shaft bore.
3. Position the brake pedal assembly and sleeve in the pedal support bracket. Slide the pedal shaft through the sleeve and pedal and secure with the nut. Torque the nut to specifications.
4. Position the nylon bushings in the bore of the push rod. Connect the push rod to the brake pedal with the eccentric bolt and nut. Install the pedal retracting spring.
5. Adjust the brake pedal free travel to 3/16-3/8-inch (Fig. 11, Part 12-01). Torque the eccentric bolt nut to specifications.

P-500 SERIES

Removal

1. Open the front cover and disconnect the transmission gearshift rods from the shaft levers. Set the rods so that the maximum working space is obtained at the pedal support bracket.
2. Remove the pedal pads from the clutch and brake pedal (Fig. 10).
3. Remove the eight screws that retain the two floor covers at the steering column, and remove the covers. Unlatch the engine cover assembly and open.
4. Remove the eight floor plate retaining screws. Pull the accelerator pedal from the accelerator linkage and remove the floor plate.
5. Disconnect the clutch and brake pedal retracting springs.
6. Loosen the pedal support bracket clamp bolt. Remove the cotter pins and clevis pins from the clutch and brake pedals.
7. Turn the front wheels full left. Through the left front fender apron, remove the locking pin from the clutch pedal and remove the pedal. Push the pedal shaft toward the centerline of the vehicle. From inside the cab, slide the pedal shaft and clutch pedal lever to the right and out of the support bracket. Remove the brake pedal from the support bracket, then remove the bushings from the pedal and the pedal support bracket.

Installation

1. Coat all bushings and the pedal shaft with a small quantity of Lubriplate or an equivalent lubricant. Install new bushings in the pedal support bracket and the brake pedal.
2. Position the brake pedal in the support bracket, and slide the pedal shaft and clutch pedal lever through the bracket and pedal.
3. Through the left front fender apron, install the clutch pedal on the shaft and secure it with a new locking pin.
4. Position the clutch rod on the clutch pedal lever, install the clevis pin and secure it with a new cotter pin.
5. Position the brake master cylinder push rod in the brake pedal, install the clevis pin and secure it with a new cotter pin.
6. Install the clutch and brake pedal retracting springs.
7. Adjust the brake pedal by removing the clevis pin from the master cylinder push rod and turning the hex head of the push rod until the specified free travel is obtained.

B-SERIES

Removal

1. Remove the brake pedal retracting spring (Fig. 8).
2. Remove the clevis pin retaining clip and remove the pin, spacers, master cylinder push rod bushing and switch assembly.
3. Remove the clip from the pedal shaft. Then slide the shaft to the left and remove the brake pedal.
4. Remove the two bushings from the pedal.

Installation

1. Coat all bushings and the pedal shaft with a small quantity of Lubriplate or an equivalent lubricant.
2. Position the nylon bushings in the brake pedal shaft bore.
3. Position the brake pedal assembly in the pedal support bracket. Slide the pedal shaft through the pedal and secure with the retaining clip.
4. Position the nylon bushing in the bore of the push rod. Connect the push rod, switch assembly and spacers to the brake pedal with the clevis pin and secure with the retaining clip.
5. Install the pedal retracting spring.

C-SERIES

Removal

1. Remove the brake pedal retracting spring (Figs. 9 and 11).
2. Remove the brake master cylinder push rod eccentric bolt nut, bolt and nylon bushings.
3. Remove the brake pedal bumper-to-bracket retaining nut. Then remove the bolt and bumper.
4. On models with a single hydraulic brake system, remove the master cylinder push rod by pulling up on the tab on the push rod boot, and remove the push rod and boot from the cylinder.
5. Remove the nut from the bolt, slide the bolt to the right and remove the brake pedal assembly, sleeve and bushing.
6. Remove the bushings from the pedal assembly.

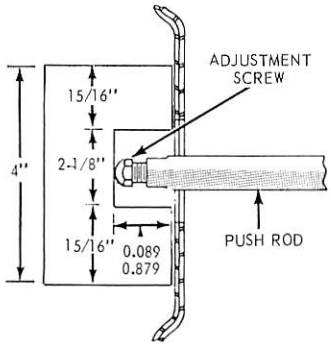

FIG. 6 Midland-Ross Booster Push Rod Gauge Dimensions and Adjustment

Installation

1. Coat all bushings and the pedal shaft, with a small quantity of Lubriplate or an equivalent lubricant. Position the nylon bushings in the brake pedal shaft bore.
2. Position the brake pedal assembly sleeve and bushing in the pedal support bracket, slide the bolt to the left and install the nut. Torque the nut to specifications.
3. On models with a single hydraulic brake system, install the push rod and boot in the master cylinder.
4. On models with a single hydraulic brake system, install the pedal bumper bolt, bumper and nut. Tighten the nut securely.
5. Install the two nylon bushings in the push rod bore, and install the push rod eccentric bolt and nut.
6. Install the pedal retracting spring.
7. On models with a single hydraulic brake system, adjust the brake pedal free-travel to 3/16-3/8 inch. Torque the eccentric bolt nut to specifications.

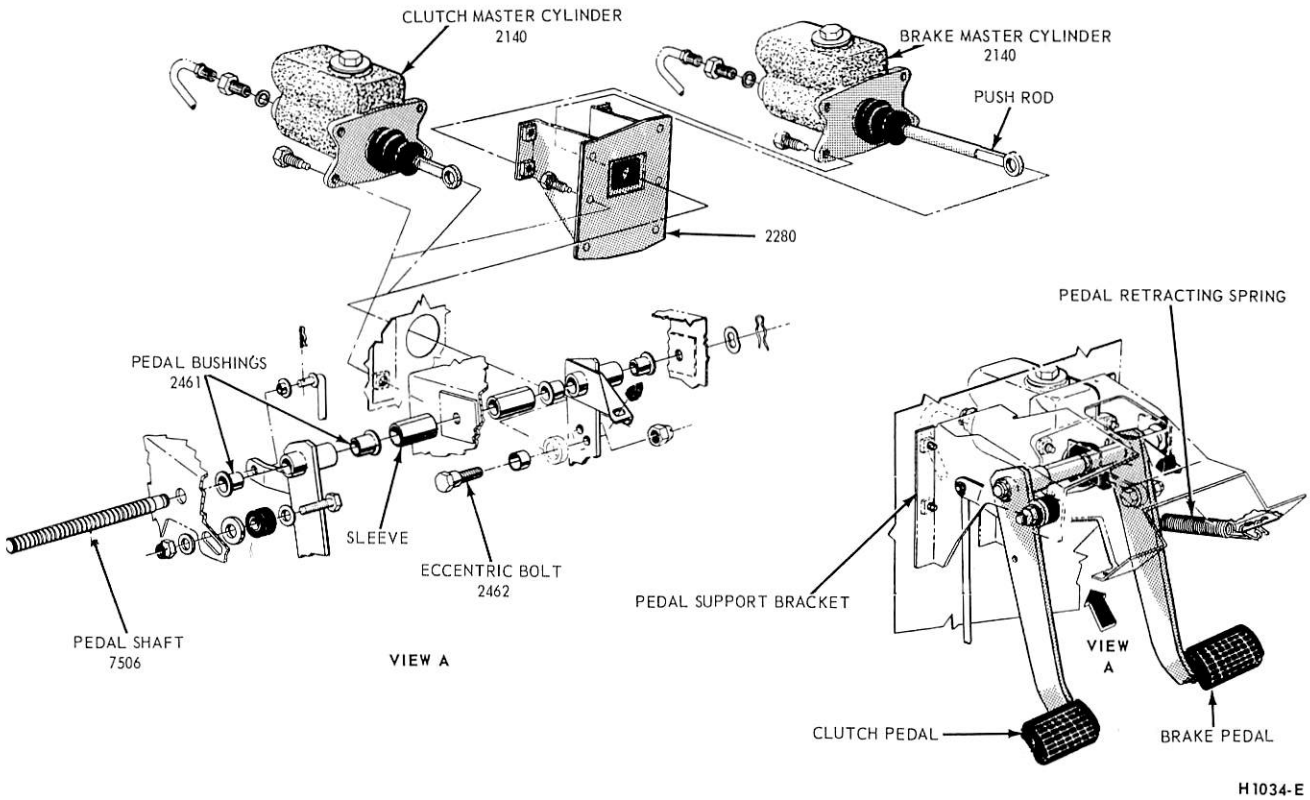

FIG. 7 L-, LN-, or LT-Series Brake Pedal and Related Parts

OVERHAUL

BRAKE WHEEL CYLINDER

Disassembly

1. With the wheel cylinder removed, remove the rubber boots from the ends of the brake cylinder. Remove the pistons, cups, and piston return spring from the cylinder (Fig. 12).
2. Remove the bleeder screw from the cylinder.

Assembly

1. Coat all brake cylinder parts with clean extra heavy duty brake fluid C6AZ-19542-A.
2. Install the bleeder screw (Fig. 12) in the brake cylinder.
3. Place the piston return spring, cups, and pistons in the cylinder bore, and install a boot and link over each end of the cylinder, clamp the brake cylinder pistons against the ends of the cylinder. **When a brake cylinder repair kit is used, install all of the parts supplied in the kit.**

MASTER CYLINDER

SINGLE BRAKE SYSTEM

Disassembly

1. With the master cylinder removed, clean the outside of the master cylinder, and remove the filler cap and gasket. Pour out any brake fluid that may remain in the cylinder and reservoir.

On a C-Series Truck master cylinder (Fig. 13), remove the 4 bolts that hold the cylinder body on the reservoir, and remove the gasket. Press down on the piston to compress the return spring, and remove the snap ring. Remove the piston, primary cup, piston filler, return spring, check valve, and check valve seat.

On vehicles equipped with a frame mounted vacuum brake booster, the check valve is installed in the booster instead of in the master cylinder.

2. On a L-, LN-, P-, or LT-Series truck master cylinder with a box-shaped reservoir, remove the fitting and gaskets from the forward end of the cylinder. Discard the gaskets. Remove the snap ring from the bore at the rear end of the cylinder, and remove the stop plate, piston cup, spring, check valve, and seat from the cylinder bore. If necessary, blow through the forward bolt hole to remove the parts.

Assembly

1. Dip all parts except the master cylinder body in clean hydraulic brake fluid. **Use only C6AZ-19542-A heavy duty brake fluid.**
2. On a L-, LN-, P-, LT-Series truck with a box-shaped master cylinder reservoir, install the brake fitting, bolt, and new gaskets on the forward end of the cylinder. Install the valve seat, valve, spring, cup, piston, and stop plate in the cylinder bore. Install the snap ring in the rear end of the bore.
3. On a C-Series truck master cylinder, install the valve seat, valve, spring, piston filler, cup and piston in the cylinder bore. Push down on the piston to compress the spring, and install the snap ring in the bore.

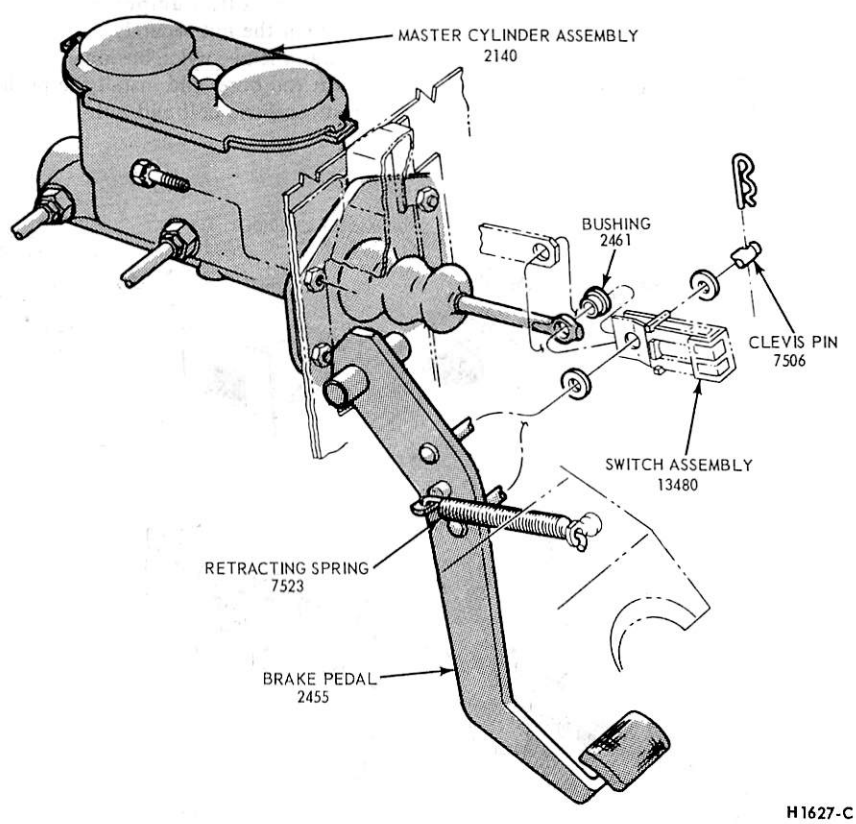

FIG. 8 B-Series Brake Pedal and Related Parts

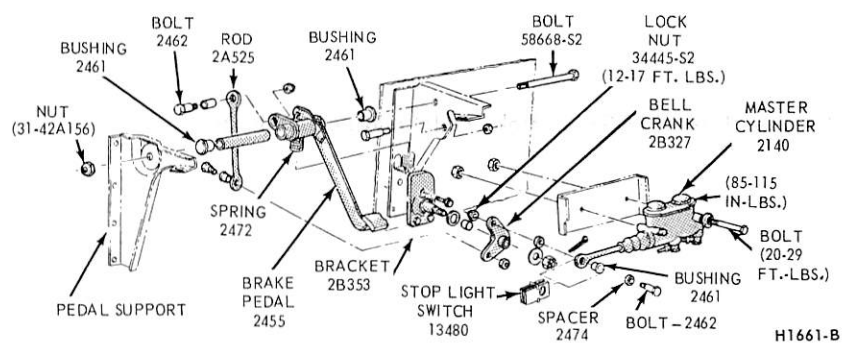

FIG. 9 Dual Master Cylinder and Brake Pedal Installation — C-Series

Position a new gasket over the cylinder body and mount the body to the reservoir. Secure with 4 bolts. Tighten bolts securely.

500-900 SERIES — SPLIT HYDRAULIC BRAKES AND FRAME MOUNTED BOOSTER

Disassembly

Refer to Figure 14.

1. Clean the outside of the master cylinder. Remove the cylinder cover screw. Lift off the cover and the diaphragm gasket and pour off excess brake fluid. Use the push rod to stroke the cylinder, forcing fluid from the cylinder through the outlet ports.
2. Loosen and remove the piston stop screw and gasket from the right hand side of the cylinder.
3. Pull back the push rod boot and remove the snap ring from the groove in the end of the cylinder bore.
4. Remove the push rod and stop plate from the master cylinder.
5. Remove the internal parts from the master cylinder. If the parts will not slide out loosely assemble the cover plate and seal the primary outlet port, then apply air pressure at the secondary outlet port.

Inspection and Repair

1. Clean all parts in isopropyl alcohol. Inspect the parts for chipping, excessive wear or damage. Replace them as required. **When using a master cylinder repair kit, install all the parts supplied.**
2. Check all recesses, openings and internal passages to be sure they are open and free of foreign matter. Passages may be probed with soft copper wire, 0.020 inch OD, or smaller.
3. Minor scratches or blemishes in the cylinder bore can be removed with crocus cloth or a clean up hone. Do not oversize the bore more than 0.007 inch.

Assembly

Refer to Figure 14.

1. Dip all parts except the master cylinder in clean extra heavy duty C6AZ-19542-A hydraulic brake fluid.
2. Install the rear rubber cup on the secondary piston with the cup lip facing the rear. All other cups face the front or closed end of the cylinder.
3. Assemble and install the secondary piston spring, front cup, and the secondary piston.
4. Install the piston stop screw and gasket, making sure the screw enters the cylinder behind the rear of the secondary piston.
5. Assemble and install the primary piston and push rod parts.
6. Locate the stop plate in the seat in the bore and engage the snap ring into the groove at the rear of the cylinder.
7. Install the push rod boot onto the push rod and the groove of the cylinder housing.
8. Bleed the master cylinder.

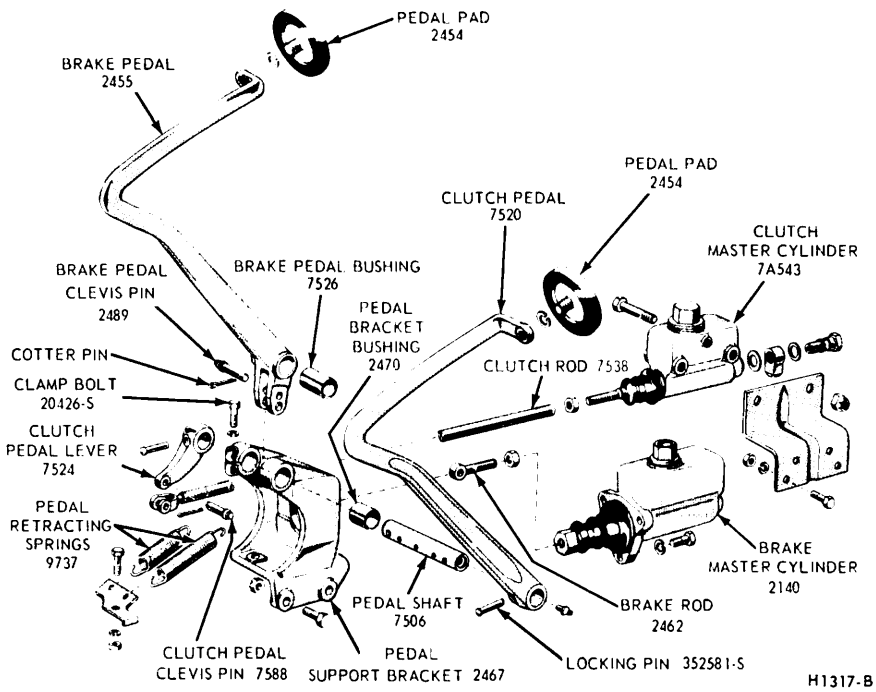

FIG. 10 Brake Pedal and Related Parts — P-500

Bleeding the Master Cylinder

Before the master cylinder is installed on the vehicle, the unit should be bled.

1. Support the master cylinder body in a vise, and fill both fluid reservoirs with C6AZ-19542-A extra heavy duty brake fluid.
2. Loosely install plugs in the front and rear brake outlet bores. Depress the primary piston several times until air bubbles cease to appear in the brake fluid.
3. Tighten the plugs and attempt to depress the piston. **The piston travel should be restricted after all air is expelled.**
4. Remove the plugs. Install the cover and diaphragm gasket assembly, and make sure the cover screw is tightened securely.

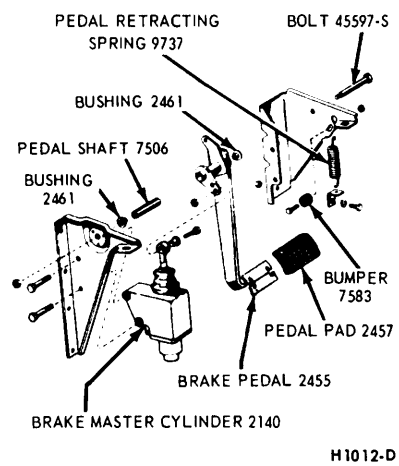

FIG. 11 Single Master Cylinder and Brake Pedal Installation — C-Series

L-AND LN-500-600 SERIES — SPLIT BRAKE SYSTEM AND DASH MOUNTED BOOSTER

Disassembly

Refer to Figure 15.

1. Clean the outside of the cylinder and remove the filler cap and gasket (diaphragm). Pour out any brake fluid that may remain in the reservoir. Stroke the push rod three

times to remove fluid from the cylinder bore.
2. Remove the reservoir retainers, washers, and reservoir from the master cylinder body.
3. Remove the two rubber washers from the reservoir and the two O-rings from the reservoir retainers.
4. Remove the snap ring, spring retainer and push rod spring.
5. Unscrew the retainer bushing counterclockwise and remove the push rod, retainer bushing, seal retainer and primary piston from the master cylinder.
6. Remove the primary piston from the push rod and discard it.
7. Remove the seal retainer, and retainer bushing from the push rod. Remove the two lip seals and the two O-rings from the retainer bushing.
8. Unscrew the end cap counterclockwise and remove the end cap and secondary piston assembly from the master cylinder.
9. Remove the snap ring from the secondary piston and remove the piston and return spring from the end cap and stop rod assembly.
10. Remove the two lip seals from the piston.
11. Remove the snap ring from the end cap and remove the secondary piston stop rod, relief port seal spring, the two snap rings and the two split washers from the end cap.
12. Remove the relief port seal from the secondary piston stop rod.
13. Remove the O-rings from the end cap.
14. Remove the primary and secondary port caps and discard.
15. Remove the check valves and spring from the ports.

Assembly

Refer to Figure 15.

1. Wash all metal parts in alcohol before assembly. Dip all parts except the master cylinder body in clean C6AZ-19542-A **extra heavy duty hydraulic brake fluid. When using a master cylinder repair kit, install all of the parts supplied.**
2. Install a new primary piston into the front end of the master cylinder bore. Push the piston through the bore until it is flush with the retainer bushing recess. Use a non-metallic object which will not scratch the bore.
3. Assemble the O-rings and the two lip seals on the retainer bushing. Be sure the lip seals fit into the undercuts in the center of the bushing with their large diameters toward the piston end.
4. Install the retainer bushing onto the closed end of the push rod and push it onto the push rod approximately half way. Be sure the lip seal at the piston end of the retainer bushing remains in the undercut portion of the retainer bushing.
5. Install the seal retainer onto the closed end of the push rod with the raised lip toward the retainer bushing.
6. Insert the push rod into the master cylinder bore and hook the push rod onto the primary piston.
7. Slide the seal retainer into the recess in the master cylinder bore.
8. Screw the retainer bushing into the master cylinder body and tighten to 15-20 ft-lbs torque.
9. Install the push rod spring with the large end toward the master cylinder and install the spring retainer and snap ring.
10. Install the O-rings on the end cap.
11. Install the relief port seal on the secondary piston stop rod.
12. Place the port seal spring, split washer (largest of two), and snap ring (largest of two) on the piston stop rod.
13. Slide the assembly into the end cap and engage the snap ring into its groove.
14. Install the lip seals on the secondary piston with the large diameters facing outward.
15. Place the secondary piston return spring on the end cap assembly.
16. Compress the spring and place the remaining snap ring and split washer on the piston stop rod.
17. Slide the piston stop rod into the secondary piston and engage the snap ring in its groove.
18. Slide the end cap and piston assembly into the master cylinder bore and screw the end cap into the master cylinder body. Tighten the cap to 15-20 ft-lbs torque.
19. Install washers on the reservoir retainers and place the retainers in the mounting holes of the reservoir.
20. Place the rubber washers and O-rings on the retainers.
21. Place the reservoir and retainer

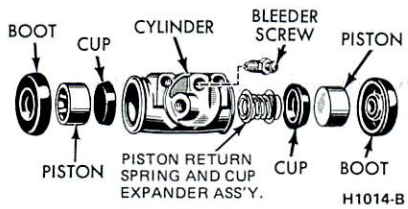

FIG. 12 Double Servo Brake Cylinder

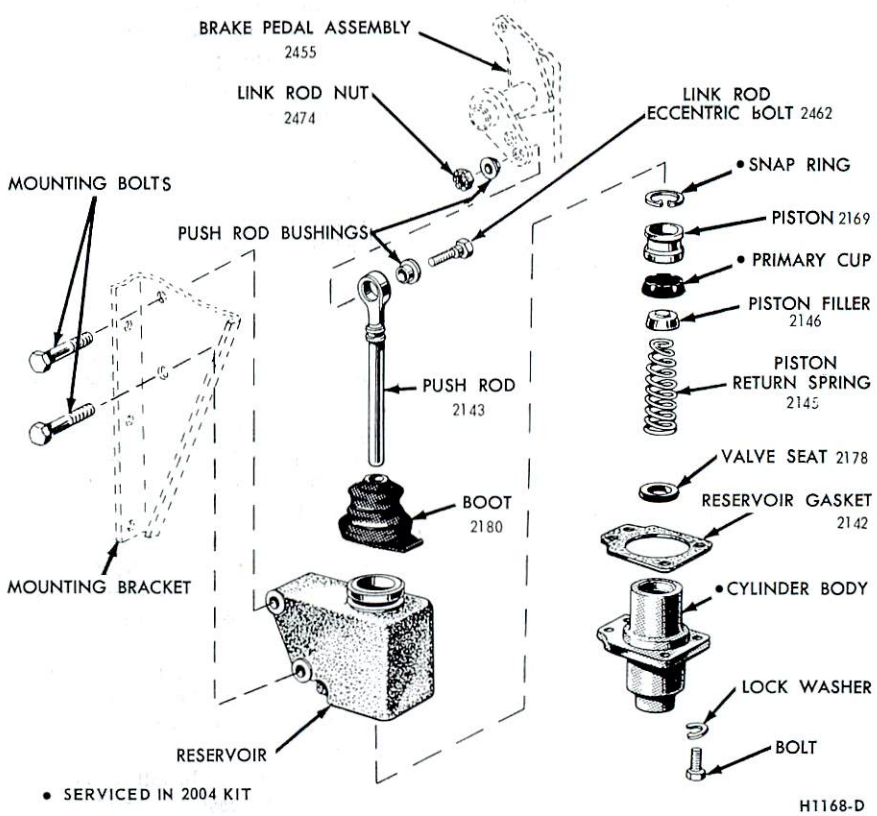

FIG. 13 C-Series Brake Master Cylinder—Disassembled

assembly on the master cylinder body and tighten the retainers to 15-20 ft-lbs torque.

22. Replace the springs and check valves in the output ports of the cylinder.
23. Replace the primary and secondary port caps. Tighten to 15-20 ft-lbs torque.
24. Install the mounting seal on the flange of the master cylinder. Install the filler cap and gasket (diaphragm).

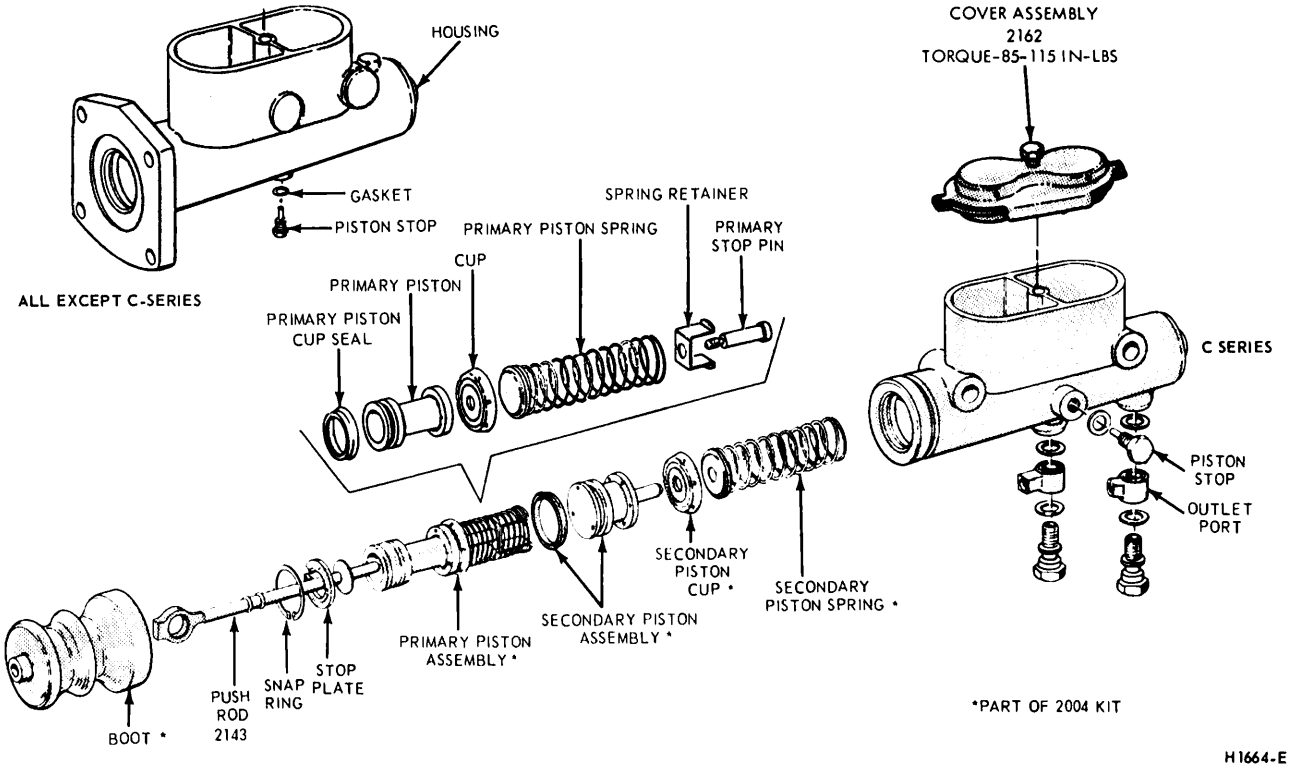

FIG. 14 Dual Master Cylinder—Disassembled View— 500-850-Series Trucks with Split Hydraulic Brakes and Frame-Mounted Booster

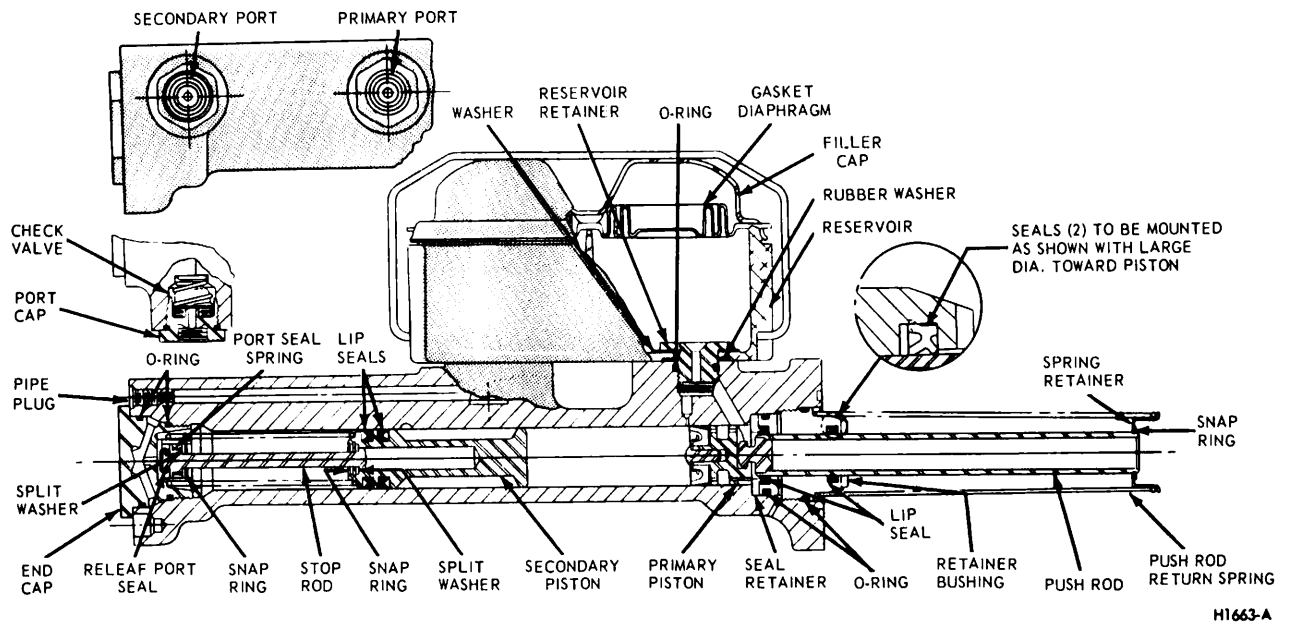

FIG. 15 Dual Master Cylinder—L-500-600, LN-6000, B-500-700 with Midland Ross Dash-Mounted Booster

SPECIFICATIONS

SPECIFIC TORQUE LIMITS

Front Brake Backing Plate to Spindle (100–400 Series)	1/2 x 13, 55-70	7/16 x 14, 30–50	1/2 x 20, 55–75
Front Brake Backing Plate and Steering Arm to Spindle (100–400 Series)	1/2 x 13, 30–40	1/2 x 20, 50–70	
Rear Backing Plate to Axle (100–400 Series)	1/2 x 13, 75–105	1/2 x 20, 50–70	7/16 x 14, 35–45
Brake Assembly to Front Axle (500–900 Series)	9/16 x 12, 110–150	1/2 x 13, 75–105	1/2 x 20, 75–105
Brake Assembly to Rear Axle (500–900 Series)	9/16 x 12, 110–150	1/2 x 13, 75–105	1/2 x 20, 75–105
Brake Drum to Hub Nuts or Bolts (500–900 Series)	1/2 x 13, 68–85	5/8 x 18, 136–170	
Master Cylinder or Booster Push Rod to Brake Pedal (500–900 Series)	3/8 x 16, 12–17		
Master Cylinder to Dash Panel (500–900 Series)	5/16 x 18, 12–17	3/8 x 16, 31–42	
Master Cylinder to Booster (Dash Mounted Booster) (500–700 Series)	14–18		
Booster to Dash Panel (Dash Mounted Booster) (500–700 Series)	3/8 x 16, 12–17	3/8 x 24, 13–20	5/16 x 18, 12–15
Master Cylinder to Pedal Bracket	5/16 x 24, 12–15	3/8 x 24, 12–17	
Eccentric Adjuster Bolt Torque	80–120 inch lbs.		

TORQUE LIMITS – HYDRAULIC TUBE NUTS (FT-LBS)

Thread Size	Ft-Lbs. ①	Thread Size	Ft-Lbs. ①
3/8–24	8–15	1/2–20	12–17
7/16–24	12–17	9/16–18	15–25

① All hydraulic line connections (nuts) must be torqued to the specified value and free of fluid leakage.

BRAKE DRUM REPAIR LIMITS (BRAKE LATHE)

Brake drums are marked with the maximum allowable braking surface diameter. If this diameter is exceeded by wear or refinishing, the drum must be replaced.

CH 1878-A

PART 12-09 Drum Brakes — Dual Cylinders, Single Piston (Wagner)

Applies To 600 Thru 900 Series Trucks

COMPONENT INDEX	Page	COMPONENT INDEX	Page
BRAKE BACKING PLATE		BRAKE SHOES	
Removal and Installation	09-02	Adjustment	09-01
BRAKE DRUMS		Removal and Installation	09-01
Removal and Installation	09-01	BRAKE WHEEL CYLINDERS	
BRAKE MASTER CYLINDER		Disassembly and Assembly	09-05
Disassembly and Assembly	09-05	Removal and Installation	09-02
Removal and Installation	09-03	SPECIFICATIONS	09-08

ADJUSTMENTS

BRAKE SHOE ADJUSTMENT

The brake drums should be at normal room temperature, when the brake shoes are adjusted. If the shoes are adjusted when the shoes are hot and expanded, the shoes may drag as the drums cool and contract.

A brake adjustment re-establishes the brake lining-to-drum clearance and compensates for normal lining wear.

Adjustment procedures for each type of brake assembly are given under the applicable heading.

SELF ADJUSTING BRAKES — 500-900 SERIES

Two-cylinder front brakes are adjusted by means of exposed, hex-head, self-locking cam adjusters. The brakes are to be manually adjusted initially. Subsequent adjustment is automatic. To adjust this brake:

1. Raise the vehicle and check the front brakes for drag by rotating the wheels.
2. Adjust one shoe by rotating the wheel in a forward direction while turning the cam hex-head also in a forward direction. Bring the shoe out to the drum until a light drag is felt. **Do not apply excessive force on the hex-head cam, as automatic adjuster parts can be damaged. Back off the adjustment until the wheel turns freely. Adjust the other cam on the same wheel in the same manner.**
3. Adjust the other front wheel brake using the procedure above.
4. Apply the brakes and recheck the adjustment.

REMOVAL AND INSTALLATION

BRAKE DRUMS THROUGH 900 SERIES

Removal and Installation

The brake drum service procedures for these models are covered under Removal and Installation in Part 12-01.

BRAKE SHOES AND ADJUSTING MECHANISM

600-900 SERIES

Removal

1. Raise the vehicle until the wheels clear the floor. Remove the wheel, and then remove the drum or the hub and drum assembly. **Mark the hub and drum to aid assembly in the same position.**

Be sure the engine is stopped and there is no vacuum in the system before disconnecting the hydraulic lines.

2. Remove both brake shoe retracting springs (Fig. 1).
3. Remove the C-washers and flat washers from the hold-down studs. Lift the shoes off the backing plate.
4. To remove the adjuster assembly from the shoe, unhook the wedge spring from the wedge and the coil spring from the shoe web. Work the spring coil off the lever pivot pin and slide the spring hook from the plug lever pin. Pull the adjuster lever from the back of the shoe and remove the plug, wedge washer, wedge and wedge guide.

Installation

1. To install the adjuster assembly, position the wedge guide with its pin located in the hole provided in the brake shoe. The wedge guide must be located on the side of the brake shoe farthest away from the carrier plate. Position the wedge on the shoe web with its serrated edge resting against the serrations on the wedge guide.
2. Insert the drum contact plug so that its head is through the hole in the brake shoe and lining and its shank rests over the wedge and wedge guide. The plug must be installed from the inside of the brake shoe.
3. From the opposite side of the shoe,

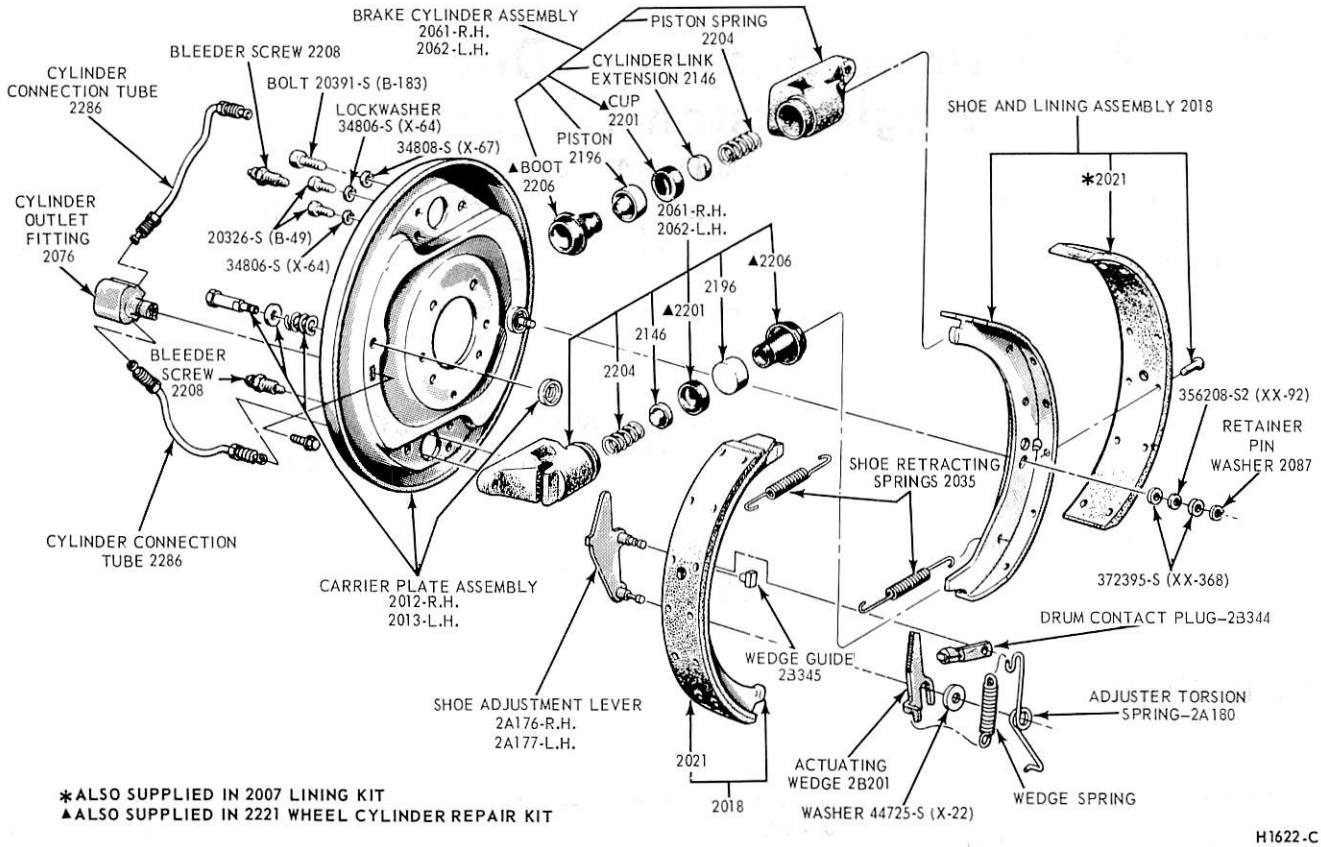

FIG. 1 Two-Cylinder Brake Shoe (Wagner) Front — Disassembled View

install the shoe adjustment lever, guiding the pin into the mating hole of the contact plug. Install the washer over the wedge on the lever pivot pin.

4. Position the U-hook of the adjuster torsion spring on the plug lever pin. Attach one end of the wedge spring to the hook, then install the coiled portion of the torsion spring over the lever pivot pin. Install the outer end of the torsion spring over the edge of the shoe web.
5. Connect the other end of the wedge spring to the hook of the wedge.
6. Fully retract the wedge against the lever pivot pin by pulling the wedge hook back while pressing on the contact plug head. If the plug protrudes above the lining, clamp the brake shoe in a vise so that its jaws clamp only the brake shoe web, while at the same time preventing the movement of the adjustment lever by resting it against the top of the vise jaw and file down the contact plug head. **Be careful not to file a flat spot on the lining. If the plug, when the mechanism is fully retracted, is greater than .006 inch below the lining surface, replace the plug and file it flush with the lining as described above.**
7. Place shoe assemblies on the carrier plate with the shoe hold-down studs through the oval shaped hole in the shoe webs. Locate the shoe assemblies to the wheel cylinders (Fig. 1).
8. Install the flat washers and bowed washers and crimp the C-washers on the hold-down studs to secure the shoes.
9. Install the brake shoe retracting springs so that the long end is hooked at the anchor end of the shoe. **Check that the shoe webs are engaged in the wheel cylinder piston insert slots.**
10. Install the hub and drum assembly.
11. Adjust the brakes as described in this part.

BRAKE WHEEL CYLINDER

Removal

1. Remove the wheel, drum, and brake shoes. Remove the cylinder-to-shoe connecting links.
2. Disconnect the brake line from the brake cylinder.
3. Remove the brake cylinder retaining bolts and lockwashers, and then remove the cylinder from the backing plate.

Installation

1. Position the brake cylinder on the backing plate and install the retaining bolts and lockwashers. Torque the small bolt to 150-200 in-lbs. Torque the larger bolt to 350-400 in-lbs as shown in Figure 1.
2. Install a new gasket on the brake line fitting and connect the line to the brake cylinder(s).
3. Install the brake shoes being sure that shoe webs engage slots in wheel cylinder piston insert. Install the drum and the wheel.
4. Adjust the brakes and bleed the system. Check the pedal operation before moving the vehicle.

BRAKE BACKING PLATE

500 THROUGH 900 SERIES

Removal

1. From front wheel spindles, remove the hub and drum attaching parts (axles under 9,000 lbs capacity grease cap and gasket if so equipped, cotter pin, bearing adjusting nut and flat washer. Axles 9,000 lbs capacity or over grease cap and gasket, lock nut, dimpled washer, locking ring, and bearing adjusting nut and pin

assembly). Then, remove the outer wheel bearing and the hub and drum assembly from the spindle.
2. On rear wheels, remove the rear axle shaft flange retaining nuts and axle shaft. Remove the rear wheel bearing lock nut, lock washer, and adjusting nut, then remove the hub and drum assembly from the axle housing. Discard the grease seal.
3. Remove the brake shoes and adjusting screw from the backing plate as outlined in this Section. Disconnect the brake line from the brake cylinder and submerge the end of the brake line in a can containing a small amount of brake fluid. This will minimize hydraulic line bleeding.
4. Remove the backing plate retaining bolts and nuts, then remove the backing plate from the front wheel spindle or rear axle housing.
5. Remove the attaching bolts and lock washers, and the brake cylinders from the backing plate.

Installation
1. Assemble the brake cylinders to the backing plate with the attaching bolts and lock washers.
2. Mount the backing plate to the front wheel spindle or to the rear axle housing flange, and secure with the attaching bolts and nuts.
3. Install the brake shoes and adjusting screw to the backing plate as outlined in this section. Connect the brake line to the brake cylinder.
4. Install a front wheel hub and drum assembly and the outer wheel bearing to the spindle. Install the hub and drum attaching parts (axles under 9,000 lbs capacity flat washer, bearing adjusting nut, cotter pin, grease cap, and gasket if so equipped, axles 9,000 lbs capacity or over — bearing adjusting nut and pin assembly, locking ring, dimpled washer, lock nut, and grease cap and gasket). Adjust the front wheel bearings as outlined in Group 11.

Install a rear wheel hub and drum assembly on the rear axle housing. **The rear hub oil seal must be replaced whenever a hub is removed or installed. Install the outer bearing and the adjusting nut, then adjust the wheel bearings. Install the lock washer and lock nut, then torque to specifications. Install the rear axle shaft, gasket and attaching nuts, then torque to specifications.**
5. Install the wheel and tire.
6. Bleed the hydraulic system and adjust the brake shoes.

BRAKE MASTER CYLINDER

L-, LN-, AND B-SERIES SPLIT BRAKE SYSTEM AND FRAME-MOUNTED BOOSTER

Removal

Refer to Figures 2 and 3.
1. Working from inside the vehicle below the instrument panel, disconnect the wires from the stop light switch.
2. On L-and LN-Series, remove the retaining nut, shoulder bolt, spacers and bushing securing the master cylinder push rod and the stop light switch to the brake pedal assembly. Remove the switch.

On B-Series, remove the hair pin clip from the brake pedal pin. Remove the push rod, spacers, stop light switch, and bushing from the brake pedal pin.
3. Remove the boot from the master cylinder push rod.
4. Disconnect the brake hydraulic system lines from the master cylinder.
5. Remove the master cylinder to dash panel retaining screws and remove the master cylinder.

Installation
1. Position the master cylinder assembly on the dash panel within the engine compartment and install the retaining screws and washers. Tighten the screws to specification.
2. Connect the hydraulic brake system lines loosely to the master cylinder.
3. Lubricate the push rod bushing with lubricant (Lubriplate). Position the bushing in the push rod.
4. On L-and LN-Series, position the stop light switch on the push rod, install the shoulder bolt and spacers. **Make sure the bushings and spacers are installed properly.** Secure the push rod and stop light switch to the brake pedal assembly with the selflocking nut.

On B-Series, install the spacers, push-rod, bushing and stop light switch on the brake pedal pin. Install the hair pin retainer.
5. Connect the wires to the stop light switch.
6. Bleed the hydraulic brake system as outlined in this section of the manual. Centralize the differential valve as outlined in this Section of the manual. Then, fill the dual master cylinder reservoirs to within 1/4 inch of the top with C6AZ-19542-A extra heavy duty brake fluid. Install the gasket (diaphragm) and filler cap.

C-SERIES—SPLIT BRAKE SYSTEM

Removal

Refer to Figure 4.

All vacuum must be relieved from the booster before hydraulic lines are disconnected.
1. Disconnect the hydraulic lines from the master cylinder. Trap the fluid drip with a shop towel or plug the ports.
2. Remove the bolt and nut connecting the push rod to the brake pedal bell crank and remove the stop light switch, bushing and spacers.
3. Remove the master cylinder mounting bolts and remove the master cylinder from the vehicle.

Installation

Refer to Figure 4.
1. If the master cylinder is being replaced, transfer the outlet ports to the new master cylinder.
2. Position the master cylinder to the dash panel and install the mounting bolts.
3. Assemble the stop light switch, bushing and spacers on the push rod and install the bolt connecting the push rod to the bell crank.
4. Connect the primary and secondary outlet tubes and tighten to specifications.
5. Bleed the brake system.

L-500-900, LN-, AND LT-SERIES

Removal
1. Remove the brake pedal retracting spring (Fig. 2).
2. Remove the brake master cylinder push rod eccentric bolt nut, and remove the bolt and two nylon bushings.
3. Remove the nut from the pedal shaft. Then slide the shaft to the left and remove the brake pedal and sleeve.
4. Remove the two bushings from the pedal, and remove the bumper from the pedal extension bracket if so equipped.

Installation
1. Coat all bushings and the pedal shaft with a small quantity of Lubriplate or an equivalent lubricant.
2. Install the bumper on the pedal extension bracket (if so equipped), and position the nylon bushings in the brake pedal shaft bore.
3. Position the brake pedal assembly and sleeve in the pedal support bracket. Slide the pedal shaft through the sleeve and pedal and secure with the nut. Torque the nut to specifications.
4. Position the nylon bushings in the bore of the push rod. Connect the

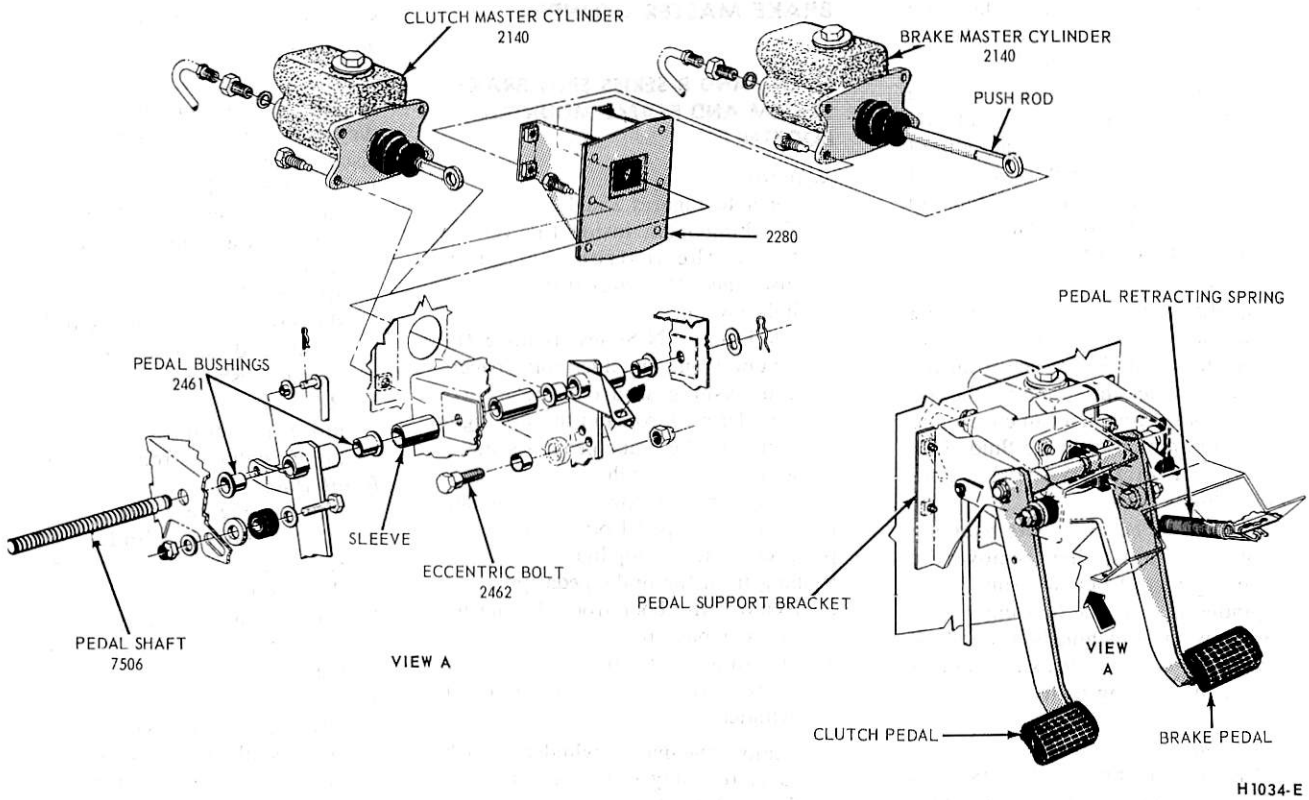

FIG. 2 L-, LN-, or LT-Series Brake Pedal and Related Parts

push rod to the brake pedal with the eccentric bolt and nut. Install the pedal retracting spring.
5. Torque the eccentric bolt nut to specifications.

B-SERIES

Removal

1. Remove the brake pedal retracting spring (Fig. 3).
2. Remove the clevis pin retaining clip and remove the pin, spacers, master cylinder push rod bushing and switch assembly.
3. Remove the clip from the pedal shaft. Then slide the shaft to the left and remove the brake pedal.
4. Remove the two bushings from the pedal.

Installation

1. Coat all bushings and the pedal shaft with a small quantity of Lubriplate or an equivalent lubricant.
2. Position the nylon bushings in the brake pedal shaft bore.
3. Position the brake pedal assembly in the pedal support bracket. Slide the pedal shaft through the pedal and secure with the retaining clip.
4. Position the nylon bushing in the bore of the push rod. Connect the push rod, switch assembly and

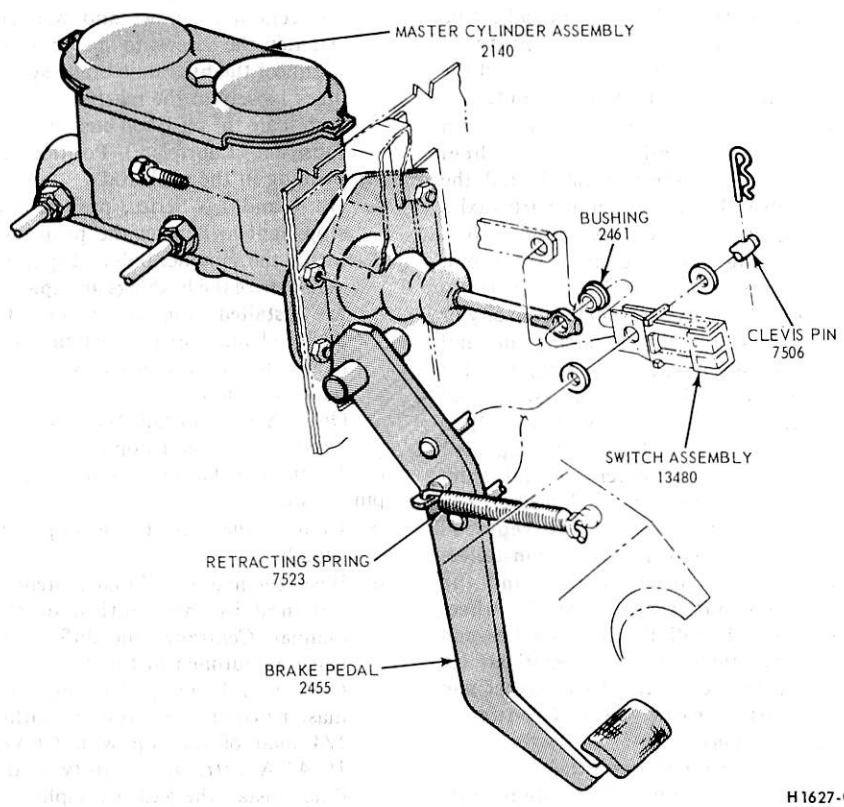

FIG. 3 B-Series Brake Pedal and Related Parts

spacers to the brake pedal with the clevis pin and secure with the retaining clip.
5. Install the pedal retracting spring.

C-SERIES

Removal

1. Remove the brake pedal retracting spring (Figs. 4 and 5).
2. Remove the brake master cylinder push rod eccentric bolt nut, bolt and nylon bushings.
3. Remove the brake pedal bumper-to-bracket retaining nut. Then remove the bolt and bumper.
4. On models with a single hydraulic brake system, remove the master cylinder push rod by pulling up on the tab on the push rod boot, and remove the push rod and boot from the cylinder.
5. Remove the nut from the bolt, slide the bolt to the right and remove the brake pedal assembly, sleeve and bushing.
6. Remove the bushings from the pedal assembly.

Installation

1. Coat all bushings and the pedal shaft, with a small quantity of Lubriplate or an equivalent lubricant. Position the nylon bushings in the brake pedal shaft bore.
2. Position the brake pedal assembly sleeve and bushing in the pedal support bracket, slide the bolt to the left and install the nut. Torque the nut to specifications.

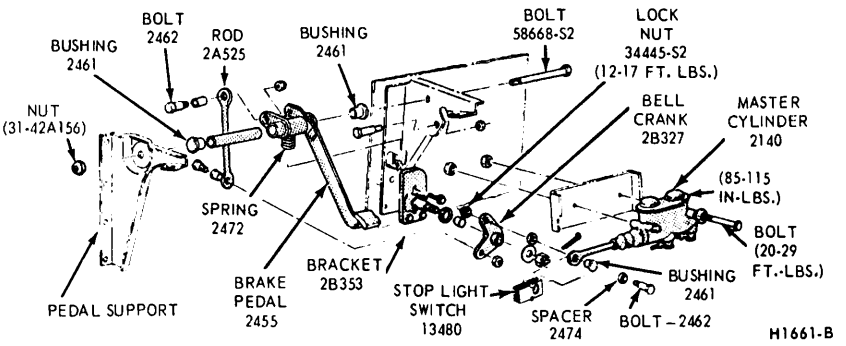

FIG. 4 Dual Master Cylinder and Brake Pedal Installation — C-Series

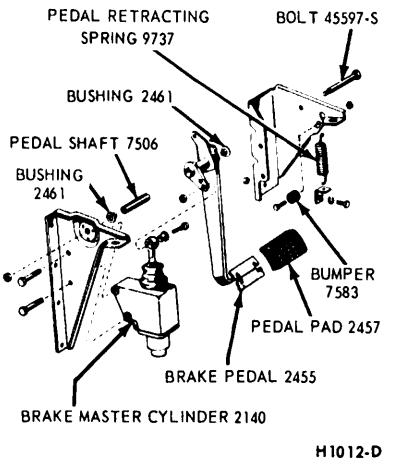

FIG. 5 Single Master Cylinder and Brake Pedal Installation — C- Series

3. On models with a single hydraulic brake system, install the push rod and boot in the master cylinder.
4. On models with a single hydraulic brake system, install the pedal bumper bolt, bumper and nut. Tighten the nut securely.
5. Install the two nylon bushings in the push rod bore, and install the push rod eccentric bolt and nut.
6. Install the pedal retracting spring.
7. On models with a single hydraulic brake system, adjust the brake pedal free-travel to 3/16-3/8 inch. Torque the eccentric bolt nut to specifications.

OVERHAUL

BRAKE WHEEL CYLINDER

Disassembly

Refer to Figure 6. With the wheel cylinder removed, remove the rubber boot from the end of the brake cylinder. Remove the piston, cup, and piston return spring from the cylinder (Fig. 6).

Assembly

1. Coat all brake cylinder parts with clean extra heavy duty brake fluid C6AZ-19542-A.
2. Install the bleeder screw (Fig. 6) in the brake cylinder.
3. Place the piston return spring, cup, and piston in the cylinder bore, and install a boot and link over each end of the cylinder, clamp the brake cylinder pistons against the end of the cylinder. **When a brake cylinder repair kit is used, install all of the parts supplied in the kit.**

MASTER CYLINDER

500-900 SERIES—SPLIT HYDRAULIC BRAKES AND FRAMEMOUNTED BOOSTER

Disassembly

Refer to Figure 7.

1. Clean the outside of the master cylinder. Remove the cylinder cover screw. Lift off the cover and the diaphragm gasket.
2. Loosen and remove the piston stop screw and gasket from the right hand side of the cylinder.
3. Pull back the push rod boot and remove the snap ring from the groove in the end of the cylinder bore.
4. Remove the push rod and stop plate from the master cylinder.

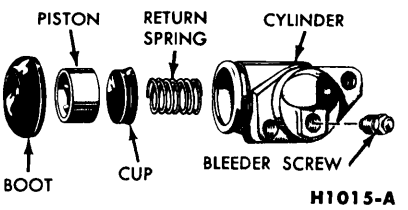

FIG. 6 Single Servo Brake Cylinder—Disassembled

5. Remove the internal parts from the master cylinder. If the parts will not slide out loosely assemble the cover plate and seal the primary outlet part, then apply air pressure at the secondary outlet port.

Inspection and Repair

1. Clean all parts in isopropyl alcohol. Inspect the parts for chipping, excessive wear or damage. Replace them as required. **When using a master cylinder repair kit, install all the parts supplied.**
2. Check all recesses, openings and internal passages to be sure they are open and free of foreign matter. Passages may be probed with soft copper wire, 0.020 inch OD, or smaller.
3. Minor scratches or blemishes in the cylinder bore can be removed with crocus cloth or a clean up hone. Do not oversize the bore more then 0.007 inch.

Assembly

Refer to Figure 7.

1. Dip all parts except the master cylinder in clean extra heavy duty C6AZ-19542-A hydraulic brake fluid.
2. Install the rear rubber cup on the secondary piston with the cup lip facing the rear. All other cups face the front or closed end of the cylinder.
3. Assemble and install the secondary piston spring, front cup, and the secondary piston.
4. Install the piston stop screw and gasket, making sure the screw enters the cylinder behind the rear of the secondary piston.
5. Assemble and install the primary piston and push rod parts.
6. Locate the stop plate in the seat in the bore and engage the snap ring into the groove at the rear of the cylinder.
7. Install the push rod boot onto the push rod and the groove of the cylinder housing.
8. Bleed the master cylinder.

Bleeding the Master Cylinder

Before the master cylinder is installed on the vehicle, the unit should be bled.

1. Support the master cylinder body in a vise, and fill both fluid reservoirs with C6AZ-19542-A extra heavy duty brake fluid.
2. Loosely install plugs in the front and rear brake outlet bores. Depress the primary piston several times until air bubbles cease to appear in the brake fluid.
3. Tighten the plugs and attempt to depress the piston. **The piston travel should be restricted after all air is expelled.**
4. Install the cover and diaphragm gasket assembly, and make sure the cover screw is tightened securely. Remove the plugs when the cylinder assembly is installed on the vehicle and is ready for hydraulic line connection.

L-AND LN-500-600 SERIES—SPLIT BRAKE SYSTEM AND DASH MOUNTED BOOSTER

Disassembly

Refer to Figure 8.

1. Clean the outside of the cylinder and remove the filler cap and gasket (diaphragm). Pour out any brake fluid that may remain in the reservoir. Stroke the push rod three times to remove fluid from the cylinder bore.
2. Remove the reservoir retainers, washers, and reservoir from the master cylinder body.
3. Remove the two rubber washers from the reservoir and the two O-rings from the reservoir retainers.
4. Remove the snap ring, spring retainer and push rod spring.
5. Unscrew the retainer bushing counterclockwise and remove the push rod, retainer bushing, seal retainer and primary piston from the master cylinder.
6. Remove the primary piston from the push rod and discard it.
7. Remove the seal retainer, and retainer bushing from the push rod. Remove the two lip seals and the two O-rings from the retainer bushing.
8. Unscrew the end cap counterclockwise and remove the end cap and secondary piston assembly from the master cylinder.
9. Remove the snap ring from the secondary piston and remove the piston and return spring from the end cap and stop rod assembly.
10. Remove the two lip seals from the piston.
11. Remove the snap ring from the end cap and remove the secondary piston stop rod, relief port seal spring, the two snap rings and the two split washers from the end cap.
12. Remove the relief port seal from the secondary piston stop rod.
13. Remove the O-rings from the end cap.
14. Remove the primary and secondary port caps and discard.
15. Remove the check valves and springs from the ports.

Assembly

Refer to Figure 8.

1. Wash all metal parts in alcohol before assembly. Dip all parts except the master cylinder body in clean C6AZ-19542-A **extra heavy duty hydraulic brake fluid. When using a master cylinder repair kit, install all of the parts supplied.**
2. Install a new primary piston into the front end of the master cylinder bore. Push the piston through the bore until it is flush with the retainer bushing recess. Use a non-metallic object which will not scratch the bore.
3. Assemble the O-rings and the two lip seals on the retainer bushing. Be sure the lip seals fit into the undercuts in the center of the bushing with their large diameters toward the piston end.
4. Install the retainer bushing onto the closed end of the push rod and push it onto the push rod approximately half way. Be sure the lip seal at the piston end of the retainer bushing remains in the undercut portion of the retainer bushing.
5. Install the seal retainer onto the closed end of the push rod with the raised lip toward the retainer bushing.
6. Insert the push rod into the master cylinder bore and hook the push rod onto the primary piston.
7. Slide the seal retainer into the recess in the master cylinder bore.
8. Screw the retainer bushing into the master cylinder body and tighten to 15-20 ft-lbs torque.
9. Install the push rod spring with the large end toward the master cylinder and install the spring retainer and snap ring.
10. Install the O-rings on the end cap.
11. Install the relief port seal on the secondary piston stop rod.
12. Place the port seal spring, split washer (largest of two), and snap ring (largest of two) on the piston stop rod.
13. Slide the assembly into the end cap and engage the snap ring into its groove.
14. Install the lip seals on the secondary piston with the large diameters facing outward.
15. Place the secondary piston return spring on the end cap assembly.
16. Compress the spring and place the remaining snap ring and split washer on the piston stop rod.
17. Slide the piston stop rod into the secondary piston and engage the snap ring in its groove.
18. Slide the end cap and piston

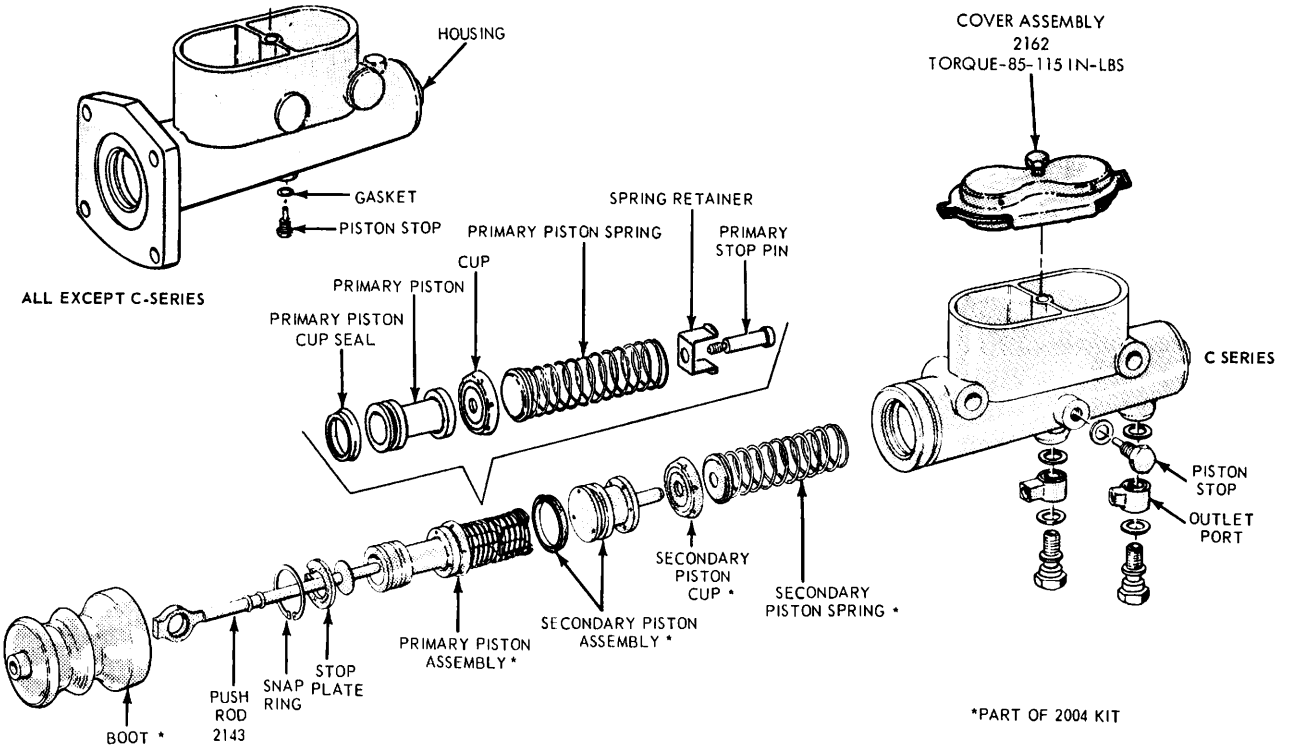

FIG. 7 Dual Master Cylinder—Disassembled View— 600-900 Series with Split Hydraulic Brakes and Frame-Mounted Booster

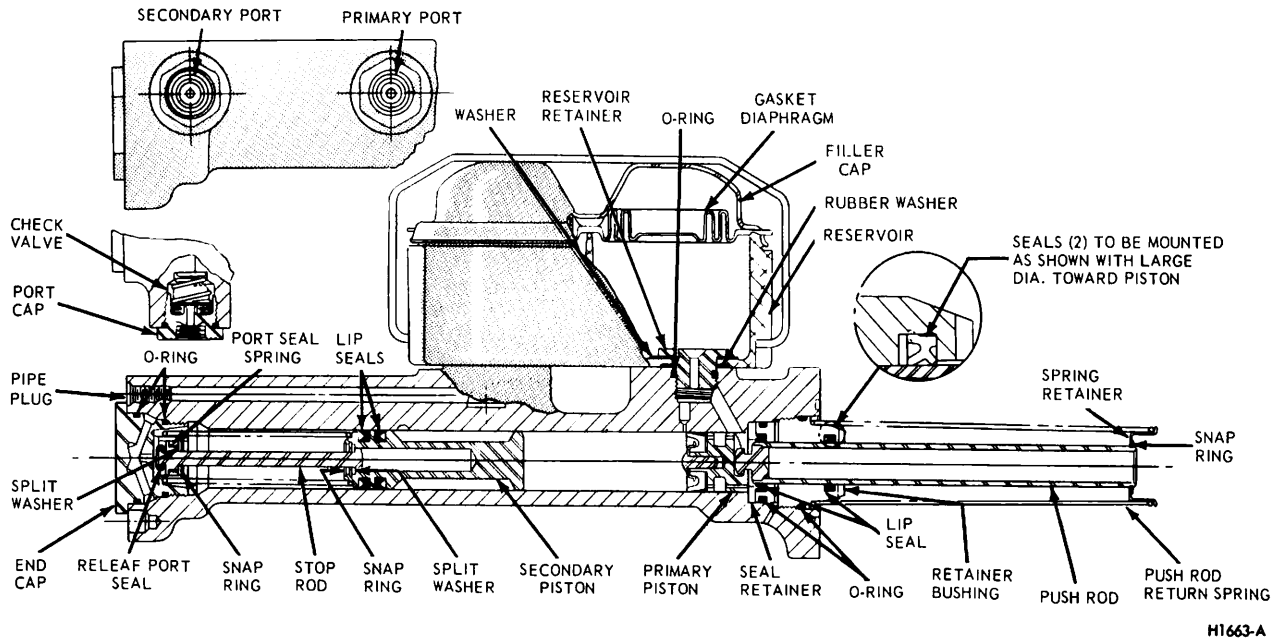

FIG. 8 Dual Master Cylinder — LN-600, LN-6000, B-500-700 with Midland Ross Dash-Mounted Booster

assembly into the master cylinder bore and screw the end cap into the master cylinder body. Tighten the cap to 15-20 ft-lbs torque.
19. Install washers on the reservoir retainers and place the retainers in the mounting holes of the reservoir.
20. Place the rubber washers and O-rings on the retainers.
21. Place the reservoir and retainer assembly on the master cylinder body and tighten the retainers to 15-20 ft-lbs torque.
22. Replace the springs and check valves in the output ports of the cylinder.
23. Replace the primary and secondary port caps. Tighten to 15-20 ft-lbs torque.
24. Install the mounting seal on the flange of the master cylinder. Install the filler cap and gasket (diaphragm).

SPECIFICATIONS

SPECIFIC TORQUE LIMITS

Front Brake Backing Plate to Spindle (100–400 Series)	1/2 x 13, 55-70	7/16 x 14, 30–50	1/2 x 20, 55–75
Front Brake Backing Plate and Steering Arm to Spindle (100–400 Series)	1/2 x 13, 30–40	1/2 x 20, 50–70	
Rear Backing Plate to Axle (100–400 Series)	1/2 x 13, 75–105	1/2 x 20, 50–70	7/16 x 14, 35–45
Brake Assembly to Front Axle (500–900 Series)	9/16 x 12, 110–150	1/2 x 13, 75–105	1/2 x 20, 75–105
Brake Assembly to Rear Axle (500–900 Series)	9/16 x 12, 110–150	1/2 x 13, 75–105	1/2 x 20, 75–105
Brake Drum to Hub Nuts or Bolts (500–900 Series)	1/2 x 13, 68–85	5/8 x 18, 136–170	
Master Cylinder or Booster Push Rod to Brake Pedal (500–900 Series)	3/8 x 16, 12–17		
Master Cylinder to Dash Panel (500–900 Series)	5/16 x 18, 12–17	3/8 x 16, 31–42	
Master Cylinder to Booster (Dash Mounted Booster) (500–700 Series)	14–18		
Booster to Dash Panel (Dash Mounted Booster) (500–700 Series)	3/8 x 16, 12–17	3/8 x 24, 13–20	5/16 x 18, 12–15
Master Cylinder to Pedal Bracket	5/16 x 24, 12–15	3/8 x 24, 12–17	
Eccentric Adjuster Bolt Torque	80–120 inch lbs.		

TORQUE LIMITS – HYDRAULIC TUBE NUTS (FT-LBS)

Thread Size	Ft-Lbs. ①	Thread Size	Ft-Lbs. ①
3/8–24	8–15	1/2–20	12–17
7/16–24	12–17	9/16–18	15–25

① All hydraulic line connections (nuts) must be torqued to the specified value and free of fluid leakage.

BRAKE DRUM REPAIR LIMITS (BRAKE LATHE)

Brake drums are marked with the maximum allowable braking surface diameter. If this diameter is exceeded by wear or refinishing, the drum must be replaced.

PART 12-24 Disc Brakes—Floating and Sliding Caliper

Applies To F-100–F-350 4 x 2 Only

COMPONENT INDEX	Page
BLEEDING HYDRAULIC SYSTEM	24-05
BRAKE SHOE	
Adjustment	24-05
Cleaning and Inspection – See Part 12-01	
Removal and Installation	24-07
CALIPER ASSEMBLY	
Disassembly and Overhaul	24-11
Removal and Installation	24-08
CALIPER MOUNTING PIN BUSHING	
Removal and Installation	24-08
DESCRIPTION	24-01
HUB AND ROTOR	
Cleaning and Inspection – See Part 12-01	
Removal and Installation	24-09
Repair	24-12
HYDRAULIC LINE REPAIR	24-06
MASTER CYLINDER	
Disassembly and Overhaul	24-12
Removal and Installation	24-09
METERING VALVE	
Removal and Installation	24-10
PRESSURE DIFFERENTIAL VALVE	
Centralizing	24-06
Removal and Installation	24-09

DESCRIPTION

FLOATING CALIPER DISC BRAKES

F-250 above 6200 G.V.W. and F-350 4 x 2 model trucks are equipped with dual piston, floating caliper disc brakes in the front (Figs. 1 and 2) and conventional drum brakes in the rear. The system has a dual master cylinder and vacuum booster.

The dual, master cylinder contains a double hydraulic cylinder with two fluid reservoirs and two hydraulic pistons (a primary and secondary). The master cylinder secondary systems outlet port is connected to the secondary (rear) hydraulic circuit and the primary system brake outlet port is connected to the primary (front) hydraulic circuit.

The master cylinder primary and secondary pistons function together when the primary and secondary systems are fully operative.

Brake lines (tubes) are connected from the brake master cylinder primary and secondary system outlet ports to the pressure differential valve assembly (Fig. 3). The electrical brake warning switch, and the brake lines (tubes) leading from the differential valve assembly to the rear wheel brake cylinders, the front brake metering valve and calipers are also shown in Fig. 3.

A metering valve is located on the No. 1 front crossmember in the front brake line between the pressure differential valve and the disc brake calipers.

The disc brake is the floating caliper design with two pistons on one side of the rotor. It is a two piece unit consisting of the caliper and cylinder housing. The caliper is mounted to the anchor (support) plate on two mounting pins and bushings in the anchor plate.

Two brake shoe and lining assemblies are used in each caliper, one on each side of the rotor. The shoes are identical and are attached to the caliper with two mounting pins and anti-rattle springs.

The cylinder housing contains the two pistons. The pistons and cylinder bores are protected by boot seals which are fitted to a groove in the piston and attached to the cylinder housing. The cylinder assembly is attached to the caliper with two cap screws and washers.

The anchor plate (support assembly) is bolted directly to the spindle. It positions the caliper assembly over the rotor forward of the spindle.

Refer to Figs. 1 and 2.

SLIDING CALIPERS DISC BRAKES

The disc brake assembly used on F-100 4 x 2 and E-250 4 x 2 (through 6200 GVW) trucks. (Figs. 4, 5 and 6) is a sliding caliper, single piston type and is different in the manner in which the caliper is attached to its supporting member. The supporting member and steering arm are cast as one piece and are combined with a wheel spindle stem to form an integral spindle assembly.

The inner shoe and lining assembly is installed with the ends of the shoe confined within the spindle assembly. An anti-rattle clip is positioned between the leading edge of the shoe and the spindle assembly at the bottom of the caliper. The outer shoe and lining is installed with the shoe flange bearing against the shoe locating and torque abutment surfaces on the caliper.

The linings are riveted to the shoes, and an insulating pad is attached to the back of each shoe. On the inner shoe, the insulating pad is between the end of the

piston and the shoe, while on the outer shoe, the insulating pad is between the outer legs of the caliper housing and the shoe. The inner and outer shoes are not interchangeable.

The caliper housing (Fig. 3) is a single piece finished casting which is positioned on the spindle assembly against machined surfaces at the trailing end. A caliper support key is installed between the leading edge of the caliper and the spindle assembly with a support spring inserted between the key and the caliper. A key retaining screw keeps the key from sliding out of the spindle assembly.

A single hydraulic piston is inserted into the cylinder bore in the caliper housing with the hydraulic fluid inlet coming into the top of the bore. A square section seal is fitted into an annular groove in the caliper cylinder bore, and a rubber boot is used to seal the piston and caliper bore from road splash and contamination. A bleeder screw is located above the cylinder bore to bleed air from the system.

A ventilated rotor is integrally cast with the wheel hub. A single piece splash shield, which is bolted to the spindle, protects the bearings and inboard surface of the rotor from road splash. The wheel protects the outboard surface of the rotor and brake assembly.

When the brake pedal is depressed, brake fluid from the master cylinder passes through the proportioning valve (Figs. 7 and 8) into the caliper cylinder. This moves the piston outward and forces the inner shoe and lining assembly against the inboard surface of the rotor.

The reaction of the inner lining pressing against the rotor moves the caliper housing slightly inboard. The outer legs of the caliper housing force the outer shoe and lining assembly against the outboard surface of the rotor.

The two shoe and lining assemblies clamp the rotor in a vise-type movement to provide the braking action. The braking torque is transferred from the linings to the shoes. The torque from the inner shoe is transferred directly to the spindle assembly, while the torque from the outer shoe is transferred through the caliper to the spindle assembly.

When the brake pedal is released, the piston seal retracts the piston into the cylinder, and the caliper housing slides slightly outboard, releasing the brakes.

The Combination Pressure differential proportioning and metering valve (Fig. 7) is attached to the Left frame siderail.

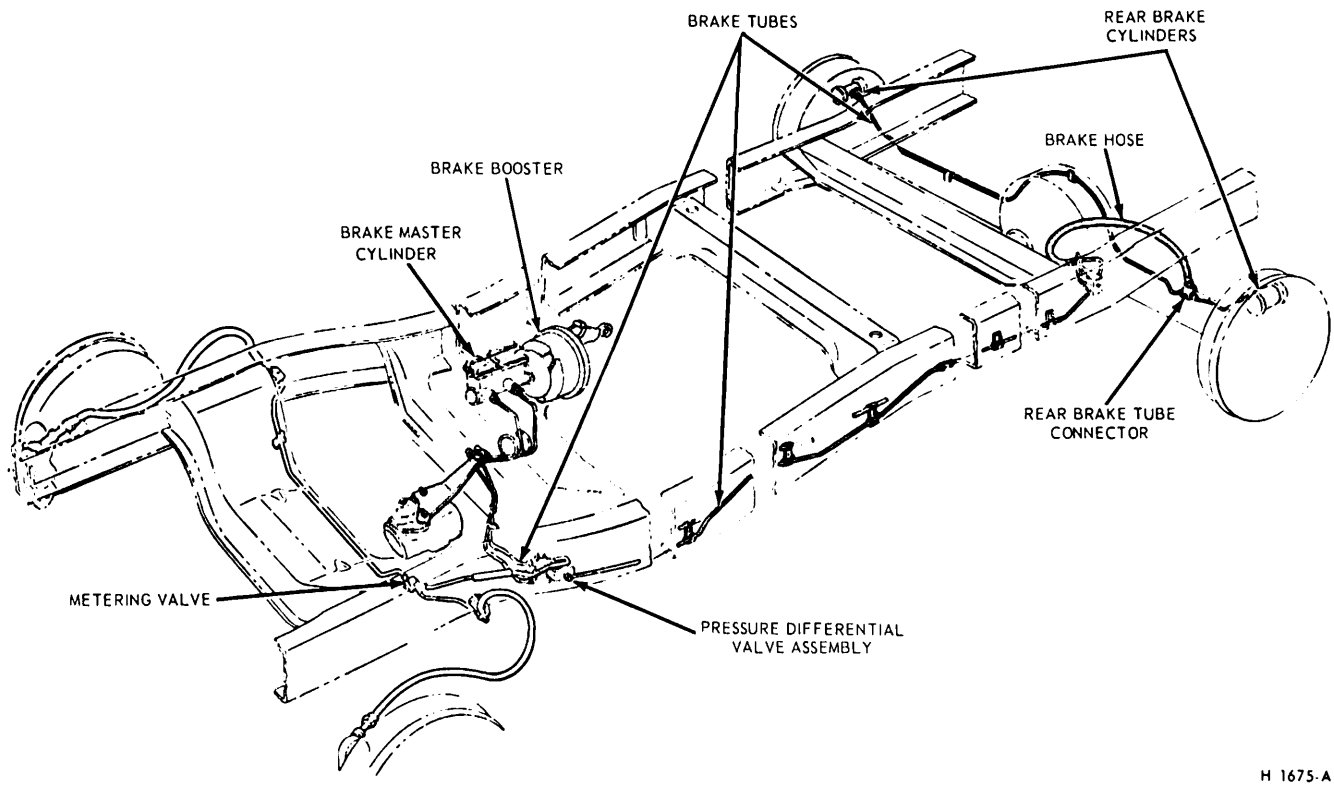

FIG. 1 Disc Brake System (Floating Calipers)

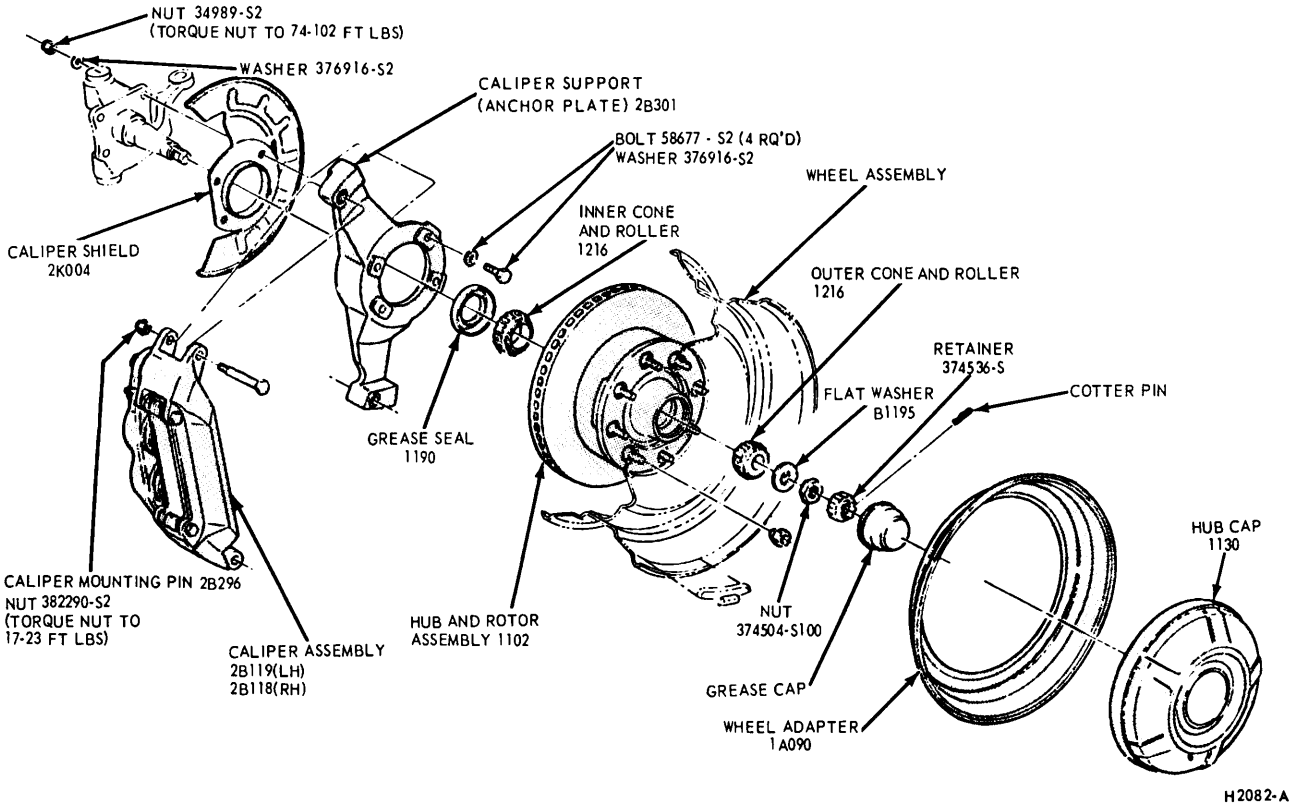

FIG. 2 Floating Caliper Disc Brake Installation

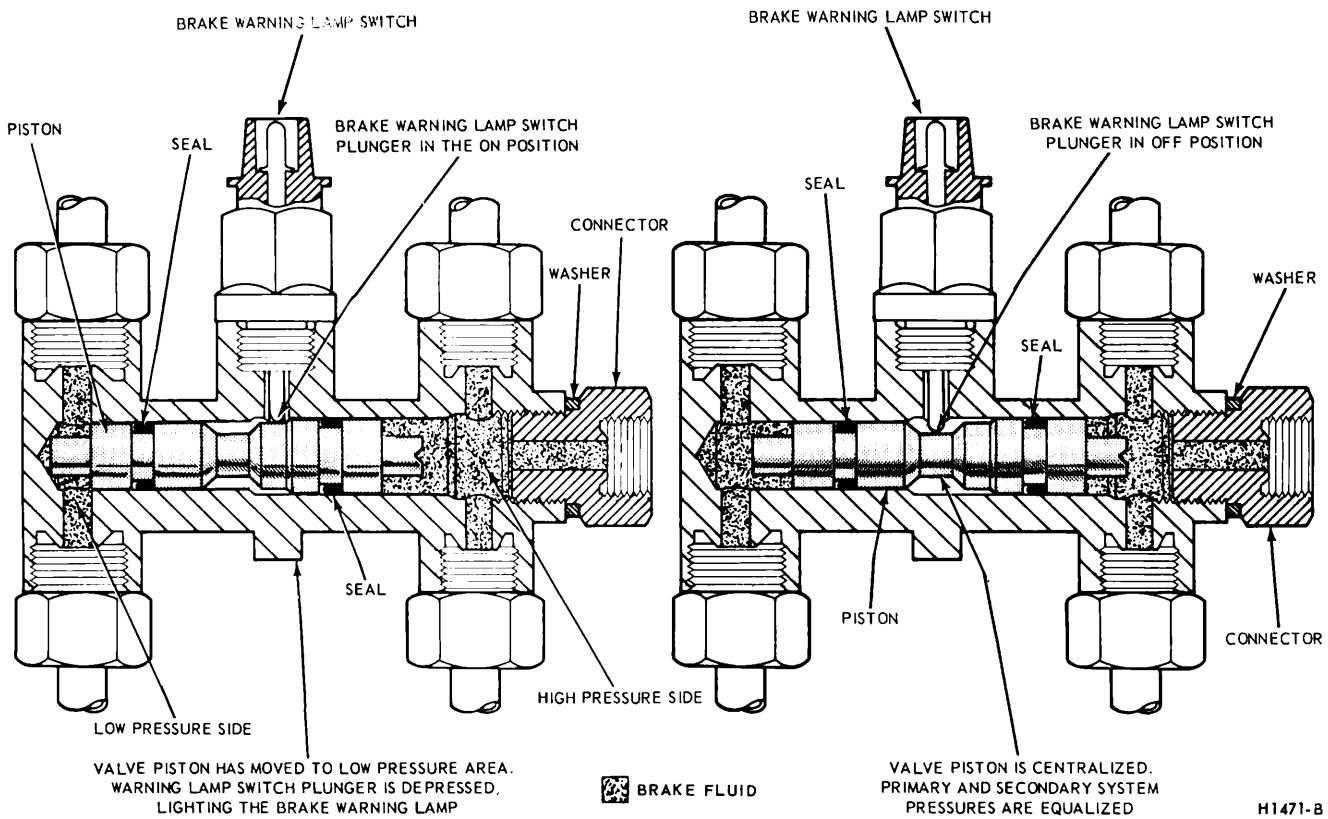

FIG. 3 Pressure Differential Valve (Floating Calipers)

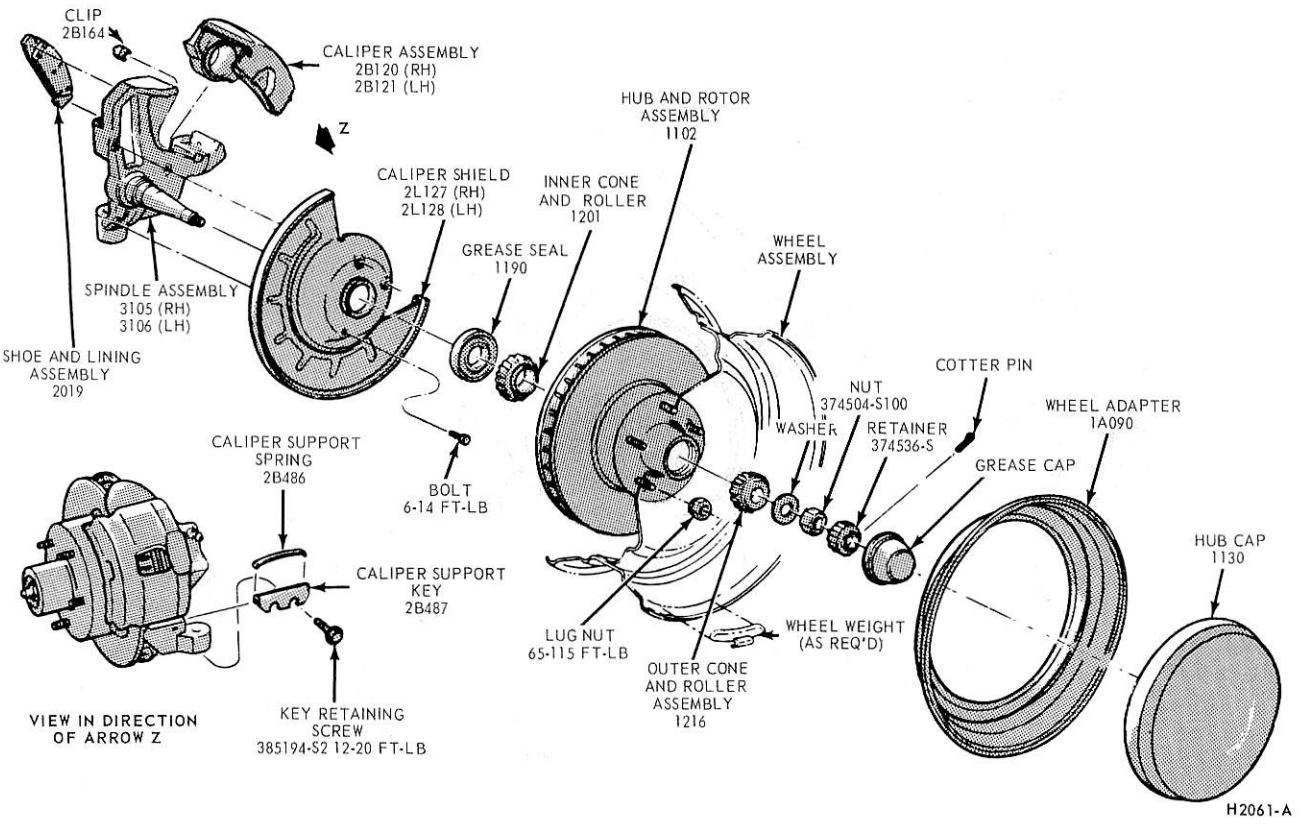

FIG. 4 Sliding Caliper Disc Brake Installation—F-100-F-250 (Through 6200 G.V.W.)

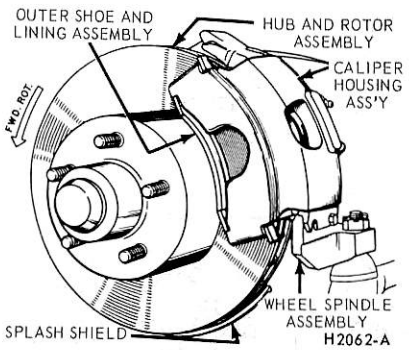

FIG. 5 Sliding Caliper Assembly—Side View

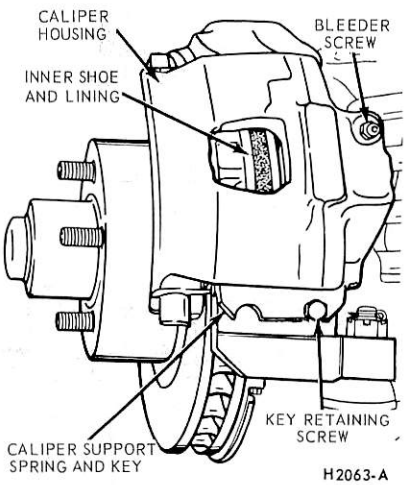

FIG. 6 Sliding Caliper Assembly—Rear View

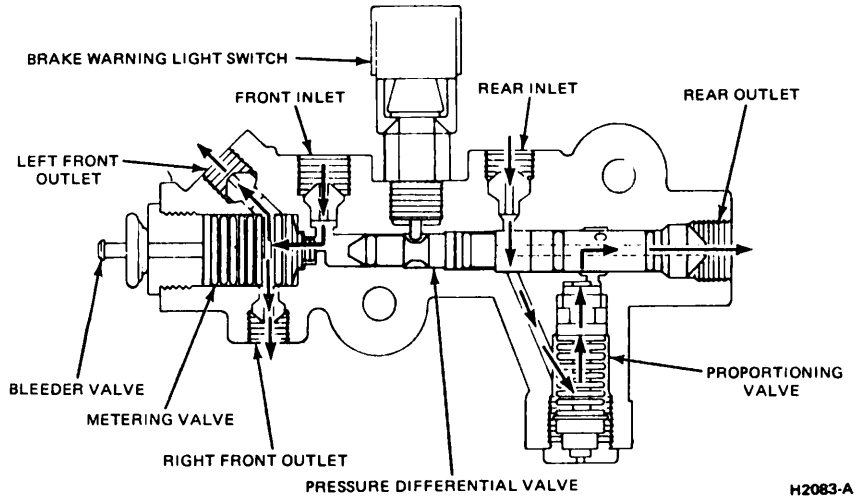

FIG. 7 Pressure Differential and Proportioning Valve—Sliding Caliper Disc Brakes

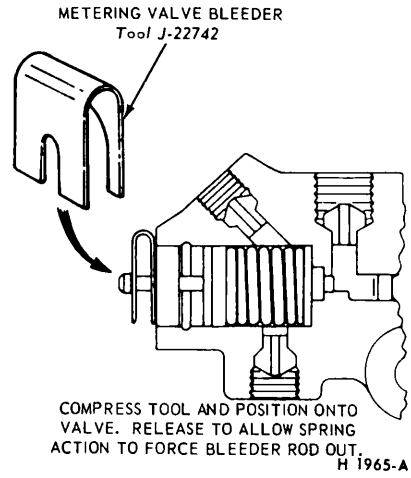

FIG. 8 Pressure Bleeding Tool—Sliding Caliper Disc Brakes

ADJUSTMENTS

DISC BRAKE SHOE ADJUSTMENT

The front disc brake assembly is designed so that it is inherently self-adjusting and requires no manual adjustment.

Automatic adjustment for lining wear is achieved by the piston sliding outward in the cylinder bore. The piston assumes a new position in the cylinder and maintains the correct adjustment.

HYDRAULIC SYSTEM BLEEDING

When any part of the hydraulic system has been disconnected for repair or replacement, air may get into the lines and cause spongy pedal action. This requires the bleeding of the hydraulic system after it has been properly connected to be sure all air is expelled from the brake cylinders and lines. The hydraulic system can be bled manually or with pressure bleeding equipment.

When bleeding the brake system, bleed one brake cylinder at a time, beginning at the cylinder with the longest hydraulic line first. Keep the master cylinder reservoir filled with the specified brake fluid during the bleeding operation. Never use brake fluid which has been drained from the hydraulic system.

It is necessary to depress the bleeder button on the metering valve (Fig. 9) when bleeding the front brakes on vehicles equipped with floating calipers. On vehicles equipped with sliding calipers, the metering rod of the proportioning valve must be pulled outward as shown in Fig. 8. This is to allow the brake fluid to reach the caliper assemblies. This operation is particularly important if pressure bleeding equipment is being used.

The pressure differential valves are self-centering after a brake hydraulic system malfunction has been corrected and the hydraulic system has been bled.

Manual Bleeding

The front and rear hydraulic brake systems are individual systems and are bled separately. Bleed the longest line first on the individual system being serviced. **During the complete bleeding operation, DO NOT allow the reservoir to run dry. Keep the master cylinder reservoirs filled with the specified brake fluid. Never use brake fluid that has been drained from the hydraulic system.**

1. Bleed the master cylinder at the outlet port side of the system being serviced.

On a master cylinder, loosen the master cylinder to hydraulic line nut. Operate the brake pedal slowly until the brake fluid at the outlet connection is free of bubbles, then tighten the tube nut to specified torque. **Do not use the secondary piston stop screw located on the bottom of the master cylinder to bleed the brake system. Loosening or removing this screw could result in damage to the secondary piston or stop screw.** Operate the brake pedal slowly until the brake fluid at the outlet connection is free of air bubbles, then tighten the bleed screw.

2. Position a suitable 3/8 inch box wrench on the bleeder fitting on the right rear brake wheel cylinder. Attach a rubber drain tube to the bleeder fitting. The end of the tube should fit snugly around the bleeder fitting.
3. Submerge the free end of the tube in a container partially filled with clean brake fluid, and loosen the bleeder fitting approximately 3/4 turn.
4. Push the brake pedal down slowly thru its full travel. Close the bleeder fitting, then return the pedal to the fully-released position. Repeat this operation until air bubbles cease to appear at the submerged end of the bleeder tube.

5. When the fluid is completely free of air bubbles, close the bleeder fitting and remove the bleeder tube.
6. Repeat this procedure at the brake wheel cylinder on the opposite side. Refill the master cylinder reservoir after each wheel cylinder is bled. On disc brakes, bleed the right front caliper first. When the bleeding operation is complete, the master cylinder fluid level should be filled to within 1/4 inch from the top of the reservoirs.
7. The pressure differential valves are self-centering. Refer to the Centralizing of the Pressure Differential Valve procedures in this Section.

Pressure Bleeding

Bleed the longest lines first. The bleeder tank should contain enough of the specified brake fluid to complete the bleeding operation. The tank should be charged with approximately 10 to 30 pounds of air pressure. Never exceed 50 pounds pressure. **Never use brake fluid that has been drained from the hydraulic system.**

1. Clean all dirt from the master cylinder reservoir cover.
2. Remove the master cylinder reservoir cover and rubber gasket, and fill the master cylinder reservoir with the specified brake fluid. Install the pressure bleeder adapter tool to the master cylinder, and attach the bleeder tank hose to the fitting on the adapter.

Master cylinder pressure bleeder adapter tools can be obtained from the various manufacturers of pressure bleeding equipment. Follow the instructions of the manufacturer when installing the adapter.

3. Position a suitable 3/8 inch box wrench on the bleeder fitting on the right rear brake wheel cylinder. Attach a bleeder tube to the bleeder fitting. **The end of the tube should fit snugly around the bleeder fitting.**
4. Open the valve on the bleeder tank to admit pressurized brake fluid to the master cylinder reservoir.

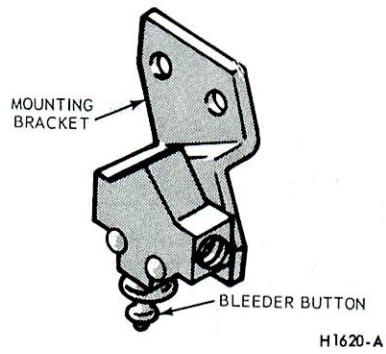

FIG. 9 Metering Valve

5. Submerge the free end of the tube in a container partially filled with clean brake fluid, and loosen the bleeder fitting.
6. When air bubbles cease to appear in the fluid at the submerged end of the bleeder tube, close the bleeder fitting and remove the tube.
7. Repeat steps 3 through 6 at the opposite wheel cylinder of the system being bled. On front brakes, bleed the right front caliper first.
8. When the bleeding operation is completed, close the bleeder tank valve and remove the tank hose from the adapter fitting.
9. Remove the Pressure Bleeder Adapter Tool. Fill the master cylinder reservoirs to within 1/4 inch from the top. Install the master cylinder cover and gasket.
10. Centralize the pressure differential valve.

CENTRALIZING THE PRESSURE DIFFERENTIAL VALVE

1. Turn the ignition switch to the ACC or ON position. Operate the brake pedal carefully and gradually until the pressure differential valve is returned to a centralized position and the brake warning light goes out.
2. Check the fluid level in the master cylinder reservoirs and fill them to within 1/4 inch of the top with the specified brake fluid.
3. Turn the ignition switch to the OFF position.

HYDRAULIC LINE REPAIR

Steel tubing is used in the hydraulic lines between the master cylinder and the front brake tube connector, and between the rear brake tube connector and the rear brake cylinders. Flexible hoses connect the brake tube to the front brake cylinders and to the rear brake tube connector.

When replacing hydraulic brake tubing, hoses, or connectors, tighten all connections securely. After replacement, bleed the brake system at the wheel cylinders and at the booster, if so equipped.

Brake Tube

If a section of the brake tube becomes damaged, the entire section should be replaced with tubing of the same type, size, shape, and length. **Copper tubing should not be used in the hydraulic system.** When bending brake tubing to fit the frame or rear axle contours, be careful not to kink or crack the tube.

All brake tubing should be double flared (refer to Part 12-01) to provide good leak-proof connections. Always clean the inside of a new brake tube with clean isopropyl alcohol.

Brake Hose

A flexible brake hose should be replaced if it shows signs of softening, cracking, or other damage.

When installing a new brake hose, position the hose to avoid contact with other truck parts. Also, whenever a brake hose is disconnected from a wheel cylinder or brake caliper a new copper washer must be used when re-connecting the hose.

REMOVAL AND INSTALLATION

BRAKE SHOES AND LINING

F-250—F-350 (ABOVE 6200 G.V.W)

Replace shoe and lining assemblies when lining is worn to a minimum of 1/16 inch in thickness (combined thickness of shoe and lining-1/4 inch minimum). **Always replace shoes and lining assemblies in axle sets—never one wheel only.**

Removal

1. Remove the wheel and tire assembly.
2. Remove the shoe and lining mounting pins, anti-rattle springs and old shoe and lining assemblies (Fig. 3).

Installation

1. Remove the master cylinder cover.
2. Loosen the piston housing-to-caliper mounting bolts sufficiently to permit the installation of new shoe and lining assemblies. **Do not move pistons.**
3. Install new shoe and lining assemblies. Install the brake shoe mounting pins and anti-rattle spring. **Be sure that the spring tangs are located in the holes provided in the shoe plates.**
4. Torque the brake shoe mounting pins to 17-23 ft-lbs.
5. Reset the pistons to the correct location in the cylinders by retightening the piston housing-to-caliper mounting bolts. **Keep the cylinder housing square with the caliper. Check the master cylinder for brake fluid overflow.**
6. Torque the piston housing-to-caliper mounting bolts to 155 to 185 ft.-lb.
7. Install the wheel and tire assembly.
8. Check the master cylinder reservoirs and (if required) fill with the specified brake fluid to within 1/4 inch from the top.
9. Install the master cylinder cover.

BRAKE SHOES AND LINING

F-100-F-250 (THROUGH 6200 G.V.W.)

Removal

Always replace shoe and lining assemblies in complete axle sets—never one wheel only.

1. Siphon or dip part of the brake fluid out of the larger master cylinder reservoir (the reservoir connected to the front disc brakes). When the caliper pistons are pressed back into the caliper cylinder bores and the brake fluid returns from the calipers, the reservoir may overflow if fluid is not removed. Discard the fluid removed.
2. Raise the vehicle and remove a front wheel and tire assembly.
3. Place a large (8 inch) C-clamp on the caliper as illustrated in Fig. 10, and tighten the clamp to bottom the caliper piston in the cylinder bore. Then remove the clamp.
4. Remove the key retaining screw (Fig. 11).
5. Use a brass rod and a light hammer to drive out the caliper support key and caliper support spring (Fig. 12). It is not necessary to disconnect the hydraulic line to the caliper; thus, it should not be necessary to bleed the brakes after the new shoes are installed.
6. Remove the caliper from the spindle assembly, by pushing the caliper downward against the spindle assembly, and rotating the upper end upward and out of the spindle assembly. Lay the caliper on a tie rod. **Do not let the caliper hang with the weight of the caliper on the brake hose. The brake hose must not be stretched or twisted.**
7. Remove the outer shoe and lining from the caliper (Fig. 13). It may be necessary to tap the shoe to loosen the shoe flange from the caliper.
8. Remove the inner shoe and lining from the spindle assembly (Fig. 14), and remove the shoe anti-rattle clip from the lower shoe abutment surface of the spindle assembly.
9. Clean and inspect the caliper assembly. **It is important to clean those areas of the caliper and spindle assembly that are in contact during the sliding action of the caliper.**

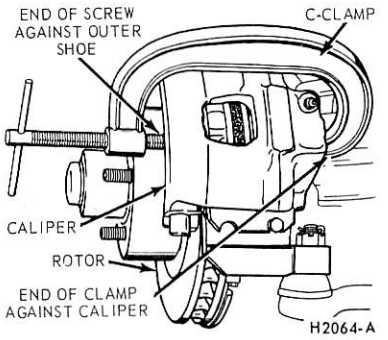

FIG. 10 Bottoming Caliper Piston

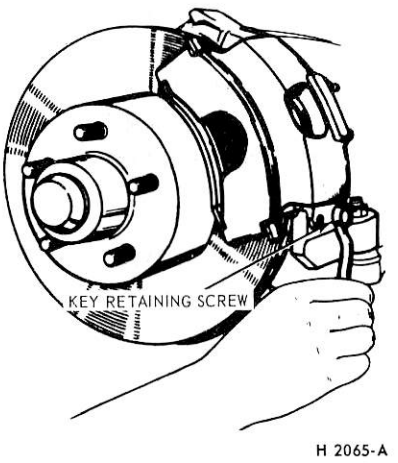

FIG. 11 Removing Key Retaining Screw

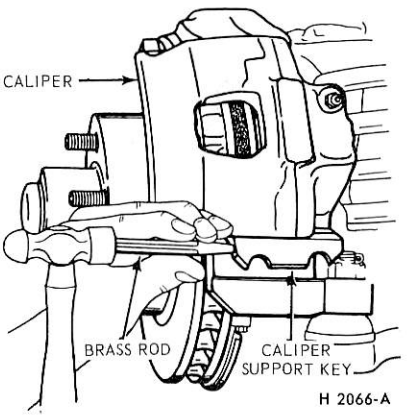

FIG. 12 Removing Caliper Support Spring and Key

Installation

1. Position a new anti-rattle clip in the lower shoe abutment in the spindle assembly (Fig. 15). Be sure that the tabs on the clip are positioned properly and the loop-type spring is positioned away from the rotor.
2. Place the lower end of the inner shoe and lining in the spindle assembly shoe abutment against the anti-rattle clip, and slide the upper end of the shoe into position. Be sure that the clip is still in position.
3. Be sure that the caliper piston is fully bottomed in the cylinder bore. If necessary, use a large C-clamp to assist.

The service replacement outer shoe and lining differs slightly from the outer

shoe and lining originally installed. The replacement shoe has tabs added to the flange on the lower edge of the shoe, and the distance between the upper tabs and lower flange is reduced to provide a slip-on interference fit.

4. Position the outer shoe and lining on the caliper, and use fingers to press the shoe tabs into place. If the shoe cannot be pressed into place by hand, a C-clamp may be used as shown in Fig. 15 to press the shoe into position. Be careful not to mar the lining with the clamp.
5. Position the caliper on the spindle assembly by pivoting caliper about the spindle upper mounting surface. Be very careful when installing the caliper to prevent tearing or cutting the boot as it slips over the inner shoe.
6. Use a brake adjusting tool or a screwdriver (Fig. 16) to hold the upper machined surface of the caliper against the surface of the spindle assembly. Then install a new caliper support spring and new caliper support key (Figs. 17 and 18). Use a soft (brass or plastic) mallet to drive the key and spring assembly into position (Fig. 18), and then install the key retaining screw. Tighten the screw to 12-18 ft-lbs.
7. After new shoes and linings and the wheel assemblies have been installed on both front wheels, lower the vehicle. Check the master cylinder reservoirs, and fill, if necessary with heavy duty (ESA-MC-625-A) brake fluid.

Press on the brake pedal firmly several times to seat the linings on the rotor. **Do not move the vehicle until a firm pedal is obtained.**

DISC BRAKE CALIPER

F-250—F-350 (ABOVE 6200 G.V.W.)

Removal

Refer to Figure 2.

1. Raise the front of the vehicle.
2. Remove the wheel cover.
3. Remove the wheel and tire assembly.
4. Remove the pins and nuts retaining the caliper assembly to the anchor plate.

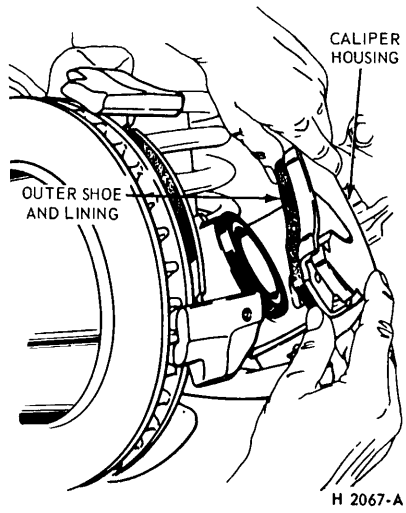

FIG. 13 Removing Outer Shoe and Lining

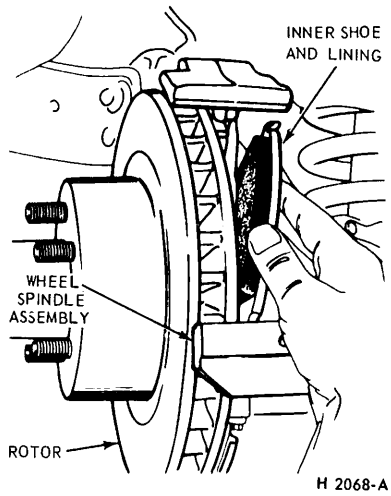

FIG. 14 Removing Inner Shoe and Lining

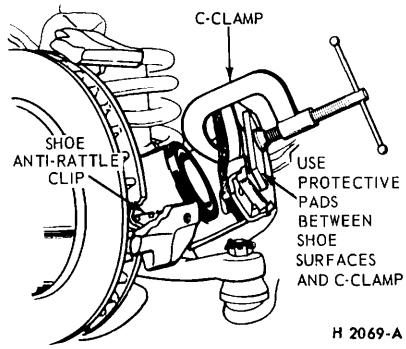

FIG. 15 Installing Anti-Rattle Clip and Outer Shoe and Lining

5. Disconnect the brake hose from the caliper and remove the caliper.

Installation

1. Connect the brake hose to the caliper. **Use a new copper washer.**
2. Position the caliper assembly to the anchor plate and install the retaining pins and nuts. **Coat the pins with a light film of chassis lube (C1AZ-19590-B) before installation.** Torque the nuts to specifications.
3. Install the wheel and tire assembly and install the wheel cover.
4. Bleed the brake system.
5. Lower the vehicle.

CALIPER MOUNTING PIN BUSHING

Removal

1. Pry the bushing assembly out of the support assembly boss by inserting a screwdriver blade or other suitable tool under the outer lip of the bushing assembly steel shell.

Installation

1. Press the bushing assembly into the support assembly mounting pin boss as shown in Fig. 19. A suitable tool for installing the bushing assembly consists of a caliper mounting pin fitted with a 1/2 inch washer as shown in Fig. 19.
2. The sealing ring of the bushing assembly rubber insert should make light contact with the bottom of the mounting pin boss counterbore.
3. Lubricate the interior of the mounting pin boss and the bushing assemblies with chassis lube (C1AZ-19590-B)

DISC BRAKE CALIPER

F-100—F-250(THROUGH 6200 G.V.W.)

1. Raise the vehicle and remove the tire and wheel.
2. Disconnect the brake hose from the caliper inlet port. Cap the hose and plug the inlet port to prevent fluid leakage.
3. Remove the caliper and the shoe and lining assemblies as outlined under Shoe and Lining Removal. Be careful to avoid getting grease or brake fluid on the linings.

Visually inspect the caliper housing for leakage. If leakage is evident, overhaul the caliper. A small amount of brake fluid wetness inside of the boot is normal.

4. Use a wire brush to remove any rust or corrosion from the machined surfaces of the spindle assembly and caliper. **It is important to clean those areas of the caliper and spindle assembly that are in contact during the sliding action of the caliper.**

Installation

1. Install the shoe and lining assemblies and the caliper as described under Shoe and Lining Installation.
2. Connect the hydraulic hose to the caliper inlet port. Use a new copper washer when connecting the hose.
3. Bleed the brake system.
4. Install the tire and wheel assemblies and lower the vehicle.

DISC BRAKE HUB AND ROTOR

Removal

Refer to Figure 2.

1. Raise the front of the vehicle and install stands.
2. Remove the wheel and tire assembly.
3. Remove the caliper assembly from the rotor and position it out of the way with wire. Refer to Caliper Removal.
4. Remove the dust cap, cotter pin, nut, washer and outer bearing and remove the rotor from the spindle.
5. Remove inner bearing cone and seal. Discard the seal.

Installation

1. If a new hub and rotor is being installed, remove the protective coating or any dirt or grease deposits with a suitable degreaser.
2. Pack the inner and outer bearing cone with bearing grease.
3. Install the inner bearing cone and seal. Refer to Group 11, Part 11-10.
4. Install the hub and rotor onto the spindle.
5. Install the outer bearing cone, washer and nut. Adjust the bearing and install the cotter key and dust cap. Refer to Group 11, Part 11-10.
6. Install the Caliper. Refer to Caliper Installation.
7. Install the wheel and tire assembly.
8. Lower the vehicle.

MASTER CYLINDER

Removal

Refer to Figure 20.

1. With the engine stopped, depress the brake pedal to expel all vacuum from the brake booster system.

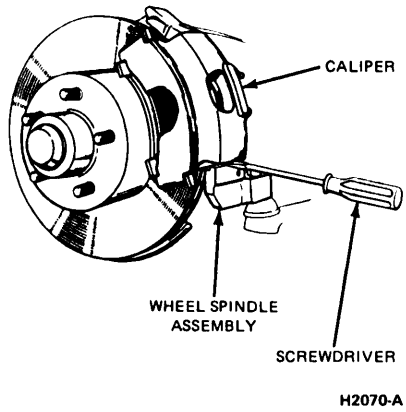

FIG. 16 Installing Caliper

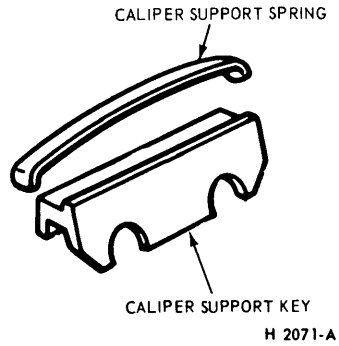

FIG. 17 Caliper Support Spring and Key

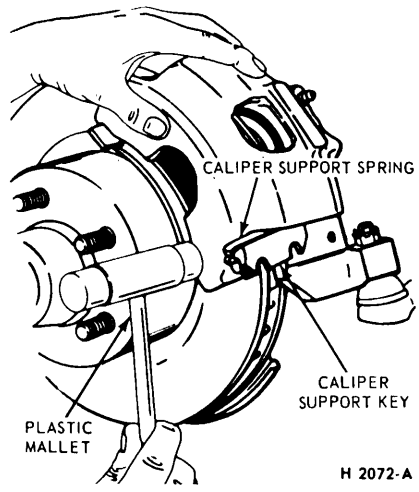

FIG. 18 Installing Caliper Support Spring and Key

2. Disconnect the hydraulic lines from the brake master cylinder.
3. Remove the brake booster to master cylinder retaining nuts and lockwashers. Remove the master cylinder from the brake booster.

Installation

1. Before installing the master cylinder, check the distance from the outer end of the booster assembly push rod to front face of the brake booster assembly. Turn the push rod adjusting screw in or out as required to obtain the specified length (Part 12-05).

Failure to maintain this dimension can prevent the master cylinder piston from completely releasing hydraulic pressure and can cause the brakes to drag.

To check the adjustment of the screw, fabricate a gauge of the dimensions shown in Part 12-05. Then, place the gauge against the master cylinder mounting surface of the booster body. The push rod screw should be adjusted so that the end of the screw just touches the inner edge of the slot in the gauge.

2. Position the master cylinder assembly over the booster push rod and onto the two studs on the booster assembly. Install the attaching nuts and lockwashers and torque them to specifications.
3. Connect the hydraulic brake system lines loosely to the master cylinder.
4. Bleed the hydraulic brake system as outlined in this section of the manual. Centralize the differential valve as outlined in this section of the manual if required. Then, fill the dual master cylinder reservoirs to within 1/4 inch of the top with the specified brake fluid. Install the gasket (diaphragm) and filler cap.

PRESSURE DIFFERENTIAL VALVE

Removal

Refer to Figure 2.

1. Raise the vehicle on a hoist. Disconnect the brake warning light wire from the pressure differential valve assembly switch. **To prevent damage to the brake warning switch wire connector, expand the plastic lugs to allow removal of the shell-wire connector from the switch body.**
2. Loosen the tube nut connecting the front brake system inlet tube at the pressure differential valve assembly and disconnect the tube.
3. Disconnect the brake hydraulic lines

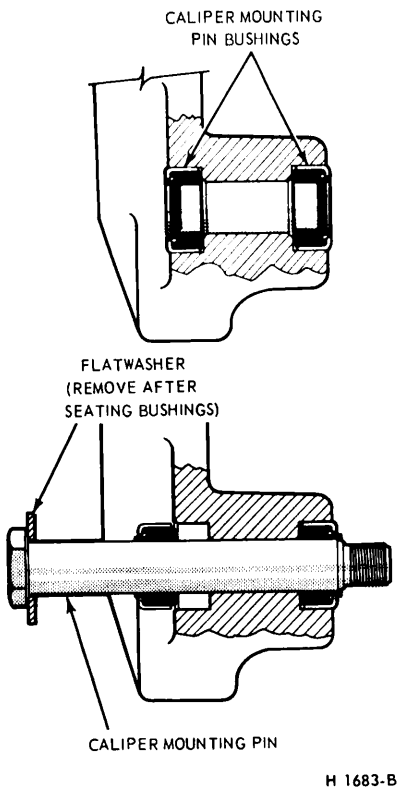

FIG. 19 Floating Caliper Mounting Pin Bushing Installation

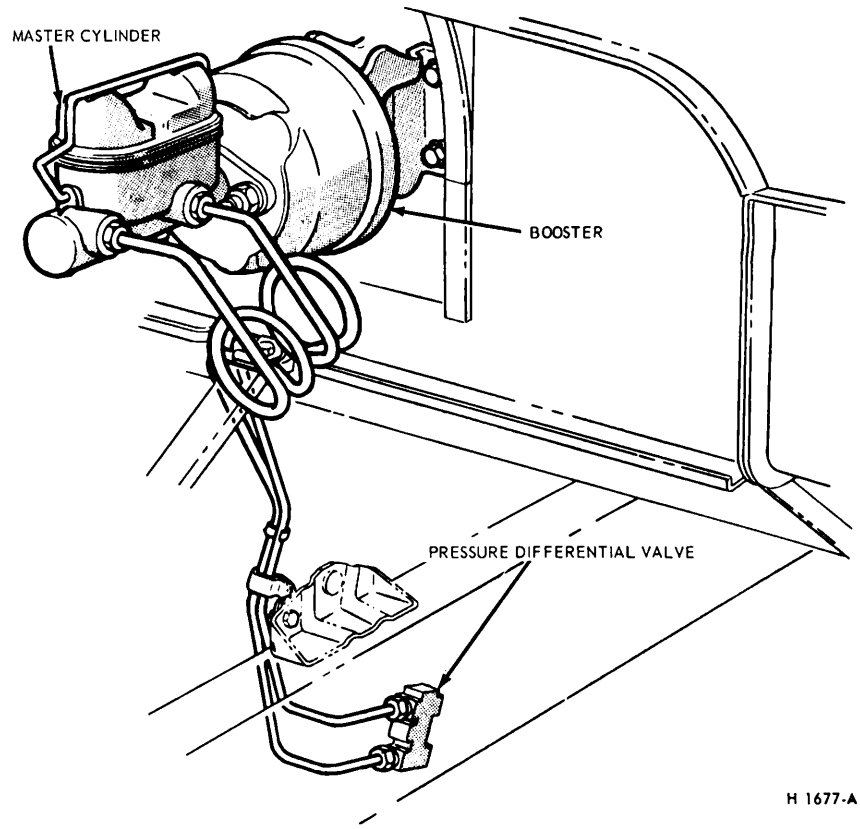

FIG. 20 Master Cylinder Installation

from the differential valve assembly.
4. Remove the screw retaining the pressure differential valve assembly to the frame side rail and remove the valve assembly.
5. If the differential valve is to be replaced, remove the brake warning lamp switch and install the switch in the new differential valve. **The pressure differential valve assembly and the brake warning lamp switch are separate units and each is serviced as a separate assembly only.**

Installation

1. Mount the pressure differential valve assembly on the frame side rail and tighten the attaching screw.
2. Connect the brake hydraulic system lines to the differential valve assembly and tighten the tube nuts securely.
3. Connect the shell-wire connector to the brake warning lamp switch. **Make sure the plastic lugs on the connector hold the connector securely to the switch.**
4. Bleed the brakes and centralize the pressure differential valve as outlined in this Section of the manual.

METERING VALVE (FLOATING CALIPERS)

The metering valve is serviced as an assembly. **No attempt should be made to disassemble or adjust the valve.**

Removal

Refer to Figure 9.

1. Remove the hydraulic tubes from the metering valve body.
2. Remove the retainer screws from the mounting bracket and remove the valve assembly.

Installation

1. Position the valve assembly to the frame and install the hydraulic tubes in the valve body. Do not tighten the tube nuts.
2. Install the retainer screws.
3. Tighten the tube nuts to specification.

BRAKE PEDAL

Removal and Installation

Refer to Part 12-01 (General Hydraulic Brake Service) for these procedures.

OVERHAUL

DISC BRAKE CALIPER—FLOATING CALIPER

Refer to Figure 21.

If the caliper assembly is leaking, the piston assemblies must be removed from the piston housing and replaced. If the cylinder bores are scored, corroded or excessive wear is evident, the piston housing must be replaced. **Do not hone the cylinder bores.** Piston assemblies are not available for oversize bores. The piston housing must be removed from the caliper for replacement.

Disassembly

1. Remove the two pins and nuts retaining the caliper to the support. Disconnect the flexible brake hose and plug the end to prevent brake fluid leakage.
2. Drain the fluid from the cylinders.
3. Position the caliper assembly in a vise. Remove the brake shoes and lining from the caliper assembly.
4. Place a 1-1/8 inch thick block of wood between the caliper and the cylinders, and apply low pressure air to the brake hose inlet. The pistons will be forced out to the wood block.
5. Remove the wood block and remove the pistons.
6. Remove the two bolts and separate the caliper from the cylinder housing.
7. Remove the piston seals from the piston bores.

Assembly

The piston seals and dust boots are not to be reused. A new set is to be used each time the caliper is assembled.

1. Lubricate the piston seals with clean brake fluid and install into the seal grooves in the cylinder bores.
2. Apply a film of clean brake fluid in the cylinder bores.
3. Lubricate the retaining lip of the dust boots with clean brake fluid and install into the boot retaining grooves in the cylinder bores.
4. Apply a film of clean brake fluid on the piston.
5. Insert the pistons into the dust boots and start them into the cylinders by hand.
6. Place a wood block over one piston and press the piston into the cylinder using care not to cock the piston as this will cause damage to the piston. Repeat for the second piston.
7. Install lining assemblies into the caliper.
8. Position the piston housing on the caliper and install the piston housing-to-caliper mounting bolts and wahers. Torque the piston housing-to-caliper mounting bolts to 155 to 185 ft.-lbs.
9. Install the flexible brake hose and torque to specifications.
10. Bleed the brake system and centralize the pressure differential valve. Refer to hydraulic system bleeding. **Do not move the vehicle after working on the disc brakes until a firm brake pedal is obtained.**

DISC BRAKE CALIPER—SLIDING CALIPER

Disassembly

1. Clean the exterior of the caliper in denatured alcohol.
2. Remove the plug from the caliper inlet port, and drain the fluid from the caliper housing.
3. Position the caliper as shown in Fig. 22 and place several shop cloths between the piston and the outer legs of the caliper.

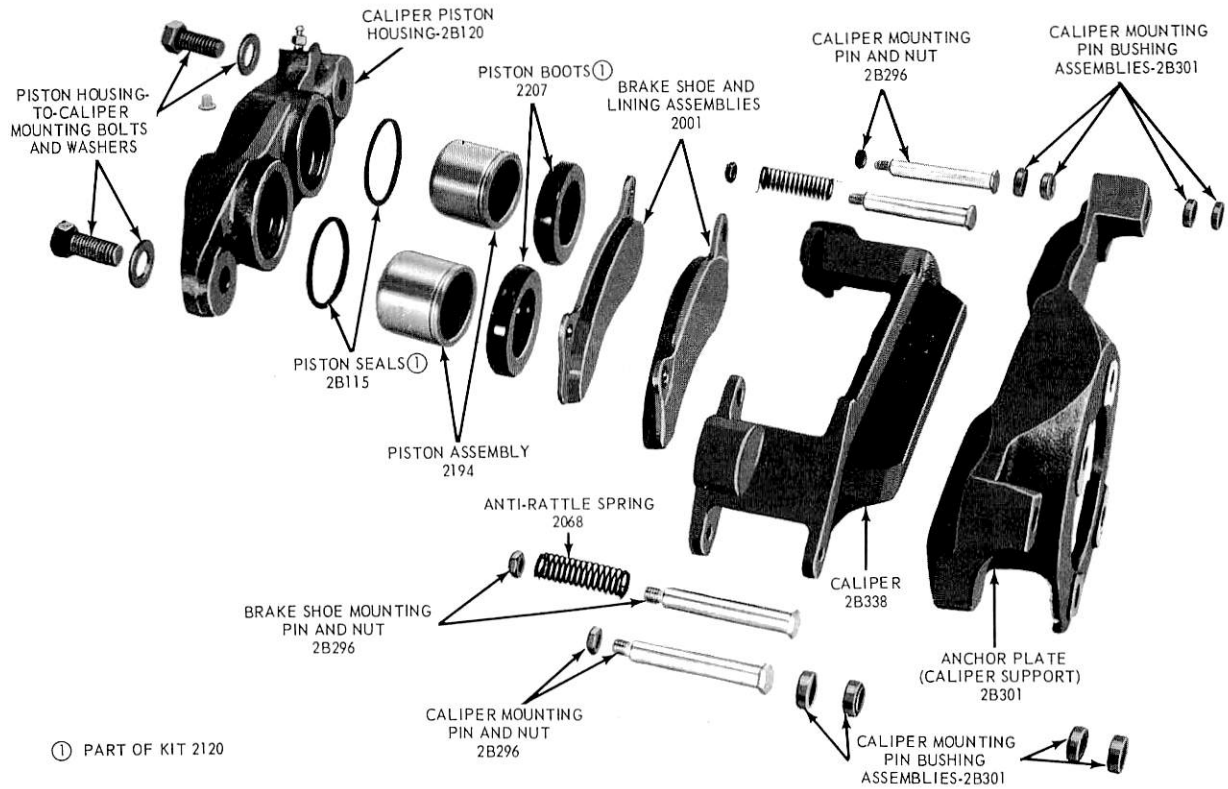

FIG. 21 Front Disc Brake Caliper Disassembled—Floating Caliper

4. Slowly and carefully apply air pressure to the caliper inlet port until the piston is removed from the caliper. **Be very careful when using air pressure to remove the piston from the caliper. If high pressures are applied, the piston may pop out with considerable force and cause personal injury. Also, be careful to avoid a spray of brake fluid.**
5. If the piston is seized or cocked and does not come out readily, release the air pressure and use a soft (brass) hammer to rap sharply on and around the end of the piston. Then, re-apply air pressure to remove the piston, following the precautions stated in Step 4.
6. Remove the boot from the piston and the seal from the caliper cylinder bore (Fig. 23). **Do not use a sharp tool to pry the piston out of the bore.**

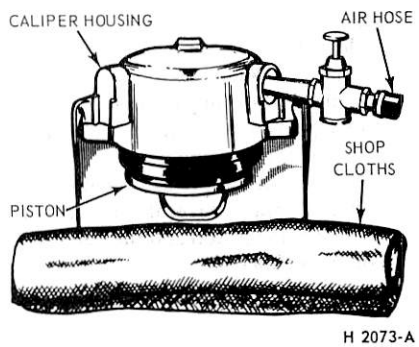

FIG. 22 Removing Caliper Piston

Cleaning And Inspection

Use a wire brush to remove any rust or corrosion from the machined surfaces of the caliper housing (**do not use a wire brush in the cylinder bore).**

Clean the caliper housing and the piston in clean denatured alcohol. Use clean, dry compressed air to clean out and dry the grooves and passages. Be sure that the cylinder bore is free of foreign matter.

Check the cylinder bore, seal groove and boot groove in the bore and the piston for damage or excessive wear. Replace the piston if it is pitted, scored or worn. If corrosion is present in the boot groove, use a wire brush carefully to clean it up.

Use a wire brush to remove any rust or corrosion from the machined surfaces of the spindle assembly.

Inspect the inner shoe anti-rattle clip, caliper support spring and caliper support key and replace, if damaged.

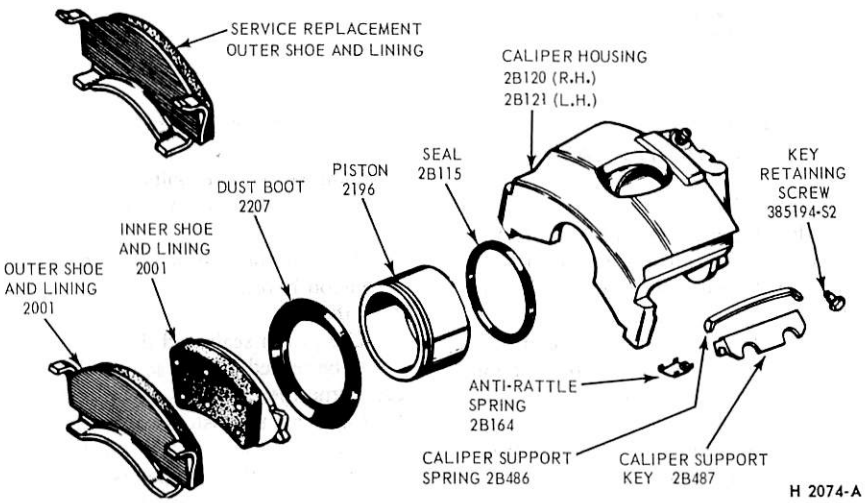

FIG. 23 Disc Brake Caliper Diassembled—Sliding Caliper

Assembly

1. Lubricate the piston seal with clean brake fluid, and position the seal in the groove in the cylinder bore.
2. Coat the outside of the piston and both beads of the dust boot with clean brake fluid and insert the piston through the dust boot so that the boot is around the bottom (closed end) of piston as shown in Fig. 24.
3. Hold the piston and dust boot directly above the caliper cylinder bore, and use fingers to work the bead of the dust boot into the groove near the top of the cylinder bore.
4. After the bead of the dust boot is seated in the groove, press straight down on the piston until it bottoms in the bore. Be careful not to cock the piston in the bore. A C-clamp (with a block of wood inserted between the clamp and piston) may be used to bottom the piston, if necessary.

DISC BRAKE ROTOR

Refinishing

Rotunda Disc Brake Tool FRE-1466-B should be used to refinish the disc brake rotors. The step-by-step resurfacing procedure provided with the tool must be adhered to.

A maximum of 0.010 inch material may be machined equally off each surface (A and B, Fig. 25). If rotor thickness falls below the minimum thickness shown on each rotor, it must be replaced.

The finished braking surfaces of the rotor must be flat and parallel within 0.001 inch; lateral runout must not exceed 0.003 inch total indicator reading, on the inboard surface at a 6-inch radius, and the surface finish of the braking surfaces are to be 15-80 micro inches.



FIG. 24 Piston and Dust Boot Assembly

DUAL-BRAKE SYSTEM MASTER CYLINDER

Refer to Figure 26.

The master cylinder must be removed from the vehicle to be overhauled.

When a repair is necessary on the master cylinder, it is required practice during the warranty period to replace the cylinder as a unit instead of overhauling the cylinder with a service repair kit.

Disassembly

1. Clean the outside of the master

cylinder and remove the filler cap and gasket (diaphragm). Pour out any fluid that remains in the cylinder.

2. Unscrew the piston stop from the bottom of the cylinder body. Remove the O-ring seal from the piston stop. Discard the seal.
3. Remove the snap ring (Fig. 27) retaining the primary and secondary piston assemblies with the cylinder body.
4. Remove the primary piston assembly from the master cylinder. Discard the primary piston assembly.

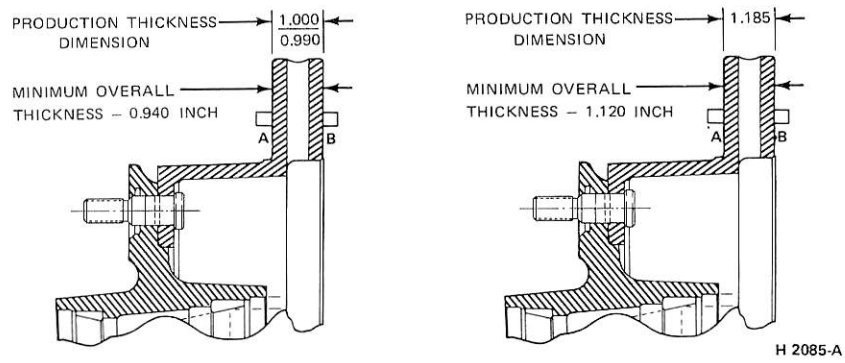

FIG. 25 Disc Brake Rotor Service Limits

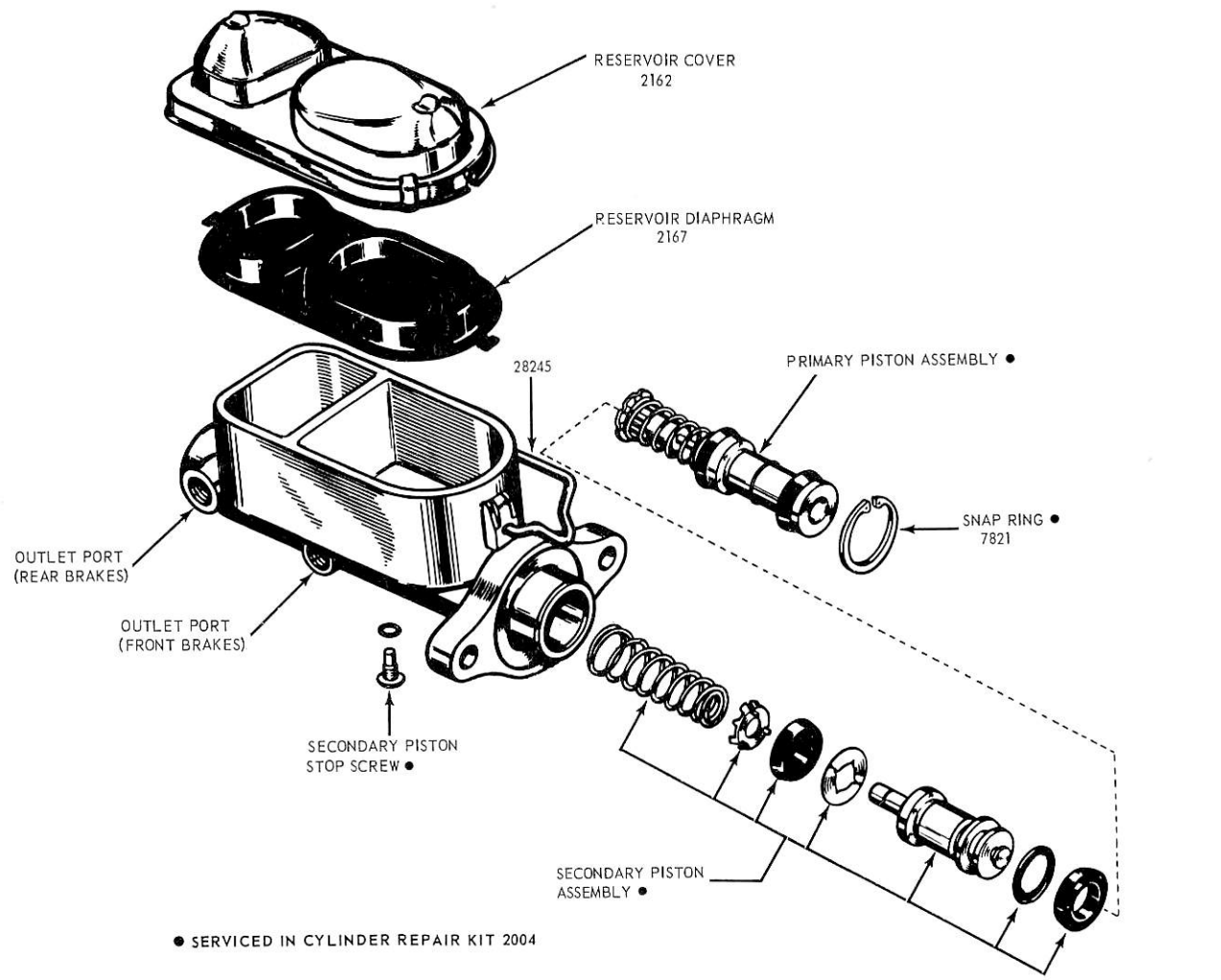

5. Apply an air hose to the rear brake outlet of the port of the cylinder body and blow the secondary piston out of the cylinder body.
6. Remove the return spring and cup protector from the secondary piston. Discard the piston.

Inspection and Repair

1. Clean all parts in clean isopropyl alcohol, and inspect the parts for chipping, excessive wear of damage. Replace them as required. **When using a master cylinder repair kit, install all the parts supplied.**
2. Check all recesses, openings and internal passages to be sure they are open and free from foreign matter. Use the air hose to blow out dirt and cleaning solvent. Place all parts on a clean pan or paper.
3. Inspect the hydraulic master cylinder bore for signs of etching, pitting or rust. Replacement of the master cylinder will be required if any of these conditions exist.

Assembly

1. Dip all the parts except the cylinder body in clean brake fluid of the specified type.
2. Assemble the spring and cap protector to the secondary piston.

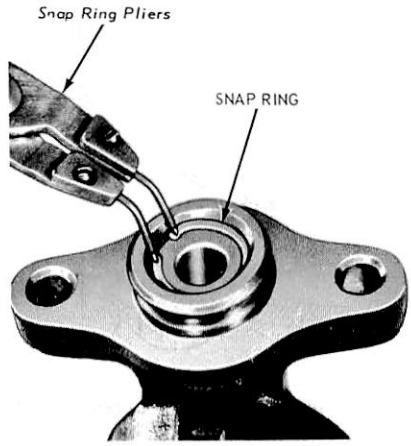

FIG. 27 Removing Snap Ring—Typical

3. Install the secondary piston assembly in the master cylinder.
4. Install a new O-ring on the piston stop, and start the stop into the cylinder body.
5. Install the primary piston assembly in the master cylinder. Push the primary piston inward and tighten the secondary piston stop to retain the secondary piston in the bore.
6. Position the stop plate and snap ring on the primary piston. Depress the primary piston and install the snap ring in the cylinder body.
7. Bleed the master cylinder.

Bleeding the Master Cylinder

Before the master cylinder is installed on the vehicle, the unit should be bled.

1. Support the master cylinder body in a vise, and fill both fluid reservoirs with the specified brake fluid.
2. Loosely install plugs in the front and rear brake outlet bores. Depress the primary piston several times until air bubbles cease to appear in the brake fluid.
3. Tighten the plugs and attempt to depress the piston. **The piston travel should be restricted after all air is expelled.**
4. Remove the plugs. Install the cover and gasket (diaphragm) assembly, and make sure the cover retainer is tightened securely.

SPECIFICATIONS

TORQUE LIMITS–FLOATING CALIPER–DISC TYPE (FT-LBS)

Description	Ft-Lbs
Brake Shoe Mounting Pins	17–23
Piston Housing-to-Caliper Mounting Bolts	155–185
Caliper Mounting Pins	17–23
Anchor Plate to Spindle	55–75

TORQUE LIMITS – HYDRAULIC TUBE NUTS (FT-LBS)

Thread Size	Ft-Lbs ①
3/8–24	8–15
7/16–24	12–17
1/2–20	12–17
9/16–18	15–25

① All hydraulic line connections (nuts) must be torqued to the specified value and free of fluid leakage.

DISC BRAKE SHOE AND LINING DIMENSIONS (Inches) –FLOATING CALIPER

Lining Length	7.42
Lining Area (Per Brake)	25.88 Sq. In.
Lining Thickness	0.358 nominal
Shoe and Lining Maximum Wear Limit	1/4
Lining Maximum Wear Limit (from front surface of shoe)	1/16

ROTOR REPAIR DIMENSIONS (Inches)

Minimum Rotor Thickness	0.940
Rotor Thickness Maximum Variation	0.001
Lateral Runout (Maximum) ①	0.003
Rotor Surface Finish	15–80 R.M.S.

① Total Indicator Reading on Inboard Surface at a 6 inch Radius.

CH1905-B

SLIDING CALIPER DISC BRAKE DIMENSIONS (INCHES)

Lining Material	Bendix PMD 7133
Lining Size:	
Outer	6.40 x 1.80
Inner	4.46 x 1.80
New Lining Thickness – Nominal (Above Rivet Heads):	
Outer	0.273
Inner	0.370
New Shoe and Lining Thickness – Nominal:	
Outer	0.535
Inner	0.695
Wear Limit – Minimum Thickness (Above Rivet Heads)	0.030
Caliper Piston Diameter – Nominal	2.875
Disc Diameter – Nominal	11.72
New Disc Thickness – Nominal	1.185
Disc Thickness – Minimum After Re-Surfacing	1.120
Disc Runout – Maximum	0.003
Disc Thickness Variation – Maximum	0.0003
TORQUE SPECIFICATIONS	
Support Key Retaining Screw	12-18 Ft-Lbs

CH2076-B

PART 12-40 General Air Brake Service

Does Not Apply To Bronco, Econoline, F-100-350 and P-Series

COMPONENT INDEX	Page
AIR BRAKE SYSTEM	
Air Chamber (Service Brake)	40-02
Description and Operation	40-02
Leak Test	40-17
Foot Control Valve	40-02
Adjustment	40-18
Description and Operation	40-02
Leak Test	40-18
Removal and Installation	40-23
Quick Release Valve	40-02
Description and Operation	40-02
Leak Test	40-17
Operation test	40-17
Removal and Installation	40-23
Relay Valve	40-02
Description and Operation	40-02
Leak Test	40-18
Operating Test	40-18
Removal and Installation	40-23
AIR COMPRESSOR DRIVE BELT	
Adjustment	40-18
AIR LINES	
Removal and Installation	40-17
AIR SUPPLY SYSTEM	
Air Compressor	40-02
Adjustment	40-18
Description and Operation	40-02
Leak Test	40-17
Removal and Installation	40-19
Automatic Moisture Ejector Valve	40-02
Description and Operation	40-02
Disassembly and Assembly	40-25
Leak Test	40-17
Operating Test	40-17
Removal and Installation	40-25
Governor	40-02
Adjustments	40-18
Description and Operation	40-02
Governor	40-02
Leak Test	40-17
Operating Test	40-17
Removal and Installation	40-22
Low Pressure Indicator Valve	40-17
Operating Test	40-17
Removal and Installation	40-22
Reservoir Safety Valve	40-17
Adjustment	40-18
Leak Test	40-17
Operating Test	40-17
SLACK ADJUSTER (CAM OPERATED BRAKES)	
Front Adjustment	40-19
Rear Adjustment	40-19
SPECIFICATIONS	40-25
STOP LIGHT SWITCH	
Operating Test	40-17
Removal and Installation	40-22
TRACTOR-TRAILER AIR BRAKE SYSTEM	
Double Check Valve	40-03
Description and Operation	40-03
Front Wheel Limiting Valve	40-04
Description and Operation	40-04
Hand Control Valve	40-03
Description and Operation	40-03
Hose Hangers and Connectors	40-03
Description and Operation	40-03
Manual Emergency Valve	40-03
Description and Operation	40-03
Relay Emergency Valve	40-03
Description and Operation	40-03
Tractor Protection Valve	40-03
Description and Operation	40-03
WEDGE BRAKE	
Adjustment	40-19

DESCRIPTION AND OPERATION

AIR SUPPLY SYSTEM

The air supply system is used with the full air brake system. In the full air system, air pressure is applied directly to the shoes through a diaphragm and mechanical linkage.

The air supply system consists of the compressor, reservoirs, governor, low pressure indicator and dash gauge.

The compressing action of the compressor is controlled by the governor. When reservoir air pressure reaches 118-126 pounds, the governor cuts out the compressor. When reservoir pressure drops to 98-104 pounds, the governor allows the compressor to cut in again. When reservoir air pressure drops below 58-65 psi, the low pressure indicator valve closes an electrical circuit to a warning buzzer.

On some models, an automatic moisture ejector valve replaces the drain cock on the air system reservoir. When reservoir pressure drops slightly, the valve opens and ejects any moisture which has collected in the sump.

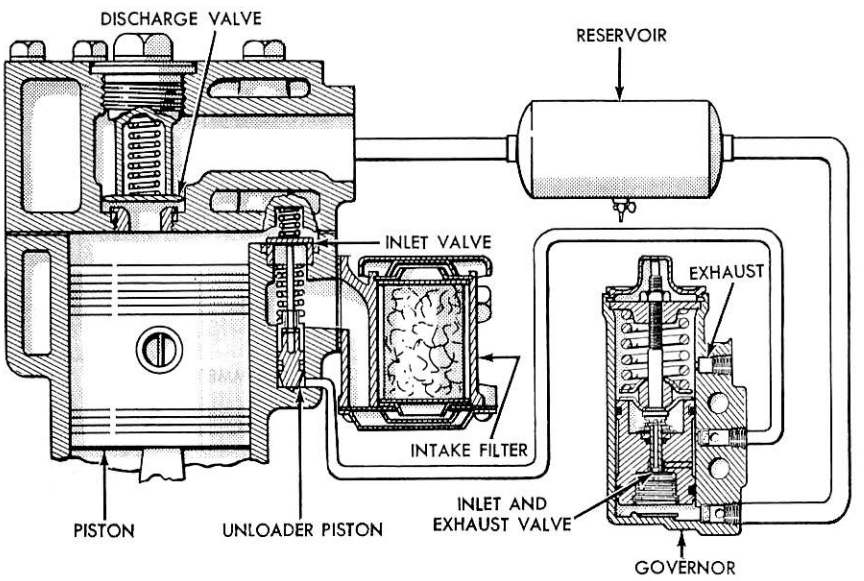

FIG. 1 Air Compressor Operation

COMPRESSOR

A typical compressor is a two-piston air pump with an engine pressure lubricating system and water cooled cylinder head and block (Fig. 1). Other compressors are furnished, depending on the engine installation. These may be single piston or air-cooled. The principle of operation is, for practical purposes, the same for all however.

GOVERNOR

The governor (Fig. 2), operating in conjunction with the compressor unloading mechanism, automatically controls the air pressure in the air brake or air supply system between the desired, predetermined maximum and minimum pressures. The compressor runs continually while the engine runs, but the actual compression of air is controlled by the governor which stops or starts compression when the maximum or minimum reservoir pressures are reached. The D-2 governor has a piston upon which air pressure acts to overcome the pressure setting spring and control the inlet and exhaust valve to either admit or exhaust air to or from the compressor unloading mechanism.

Connections in this system are to the reservoir and compressor unloading ports. There also is an exhaust port.

AUTOMATIC MOISTURE EJECTOR VALVE

The automatic moisture ejector valve (Fig. 3) ejects moisture and contaminants from the air system reservoir. It operates automatically and requires no manual assistance or control lines from other sources.

The automatic moisture ejector valve has a die cast aluminum body and cover and is mounted in the bottom of the air system reservoir.

SERVICE BRAKE SYSTEM

The braking system (Figs. 4 through 11) consists of the foot control valve (Fig. 5), the brake chambers, brake shoe actuating mechanism, and quick release valves (Fig. 12).

FOOT CONTROL VALVE

The foot control valve delivers air pressure from the air supply system to the brake air service chambers.

The distance the brake treadle or pedal is depressed regulates the amount of compressed air delivered by the foot control valve to the brake chambers. The amount of air, in turn, determines the braking force applied to the shoes by the slack adjusters or wedges.

BRAKE SERVICE AIR CHAMBER

Compressed air, admitted to the brake chamber by the foot control valve, enters the chamber behind a diaphragm which forces the push plate and push rod outward (Fig. 13). On cam-type air brakes, the outward movement of the push rod rotates the slack adjuster which in turn rotates the brake camshaft and cam forcing the shoes against the drum. On wedge-type air brakes, the outward movement of the push rod forces a wedge between the shoe plungers forcing the shoes against the drum.

QUICK RELEASE VALVES AND RELAY VALVE

The quick release valve (Fig. 4) reduces the time required to release the brakes by hastening the exhaust of air from the brake chambers. The valve body contains a spring-loaded diaphragm so arranged as to permit supply pressure from the control valve to flow through the release valve to the brake chambers in one direction. When supply pressure is reduced, the air, which has passed through, is permitted to escape rapidly through the exhaust port.

The quick release valve is used with both front and rear brake chambers, or with front chambers only as in the case of a LT-Series truck.

On a LT-Series truck, the relay valve is used in place of the rear quick release valve (Fig. 14). The relay valve functions somewhat the same as the quick release valve, except that it services four rear brake chambers on a LT-Series truck instead of two. The relay valve is also more sensitive to the action of the control valve in that it can assume a balanced position as well as apply and release.

TRACTOR-TRAILER AIR BRAKE SYSTEM

Tractor-trailer air brake equipment is available as a regular production option. The following items are included in the package.

HAND CONTROL VALVE

The hand operated brake application valve (Fig. 15) is mounted on the steering column. It controls the application of the trailer brakes independent of the tractor brakes.

DOUBLE CHECK VALVE

The double check valve is a shuttle type valve which is connected between the hand operated and foot operated brake control valves. The double check valve prevents air from exhausting through one of the brake control valves while the other is being applied.

In a typical installation (Fig. 16), the double check valve is connected to a reservoir pressure manifold mounted to the engine side of the dash panel. The pressure indicator valve also ties into this manifold from the passenger side.

MANUAL EMERGENCY VALVE

The manual emergency valve is mounted under the edge of the instrument panel. This is a two-way valve by which the operator manually controls the operation of the tractor protection valve for either normal or emergency operation of the brakes.

TRACTOR PROTECTION VALVE

A manually and/or automatically operated push-pull type tractor protection valve (Figs. 17 and 18) which works in conjunction with the trailer emergency break-away valve (Fig. 19) is standard equipment on all air brake models equipped with the optional tractor package.

RELAY EMERGENCY VALVE

The relay emergency valve is located on the trailer near the trailer reservoir. During normal operation it charges the trailer reservoir and applies and releases the trailer brakes in unison with the tractor brakes. During emergency operation, or in the case of trailer break-away, the relay emergency valve automatically applies the trailer brakes.

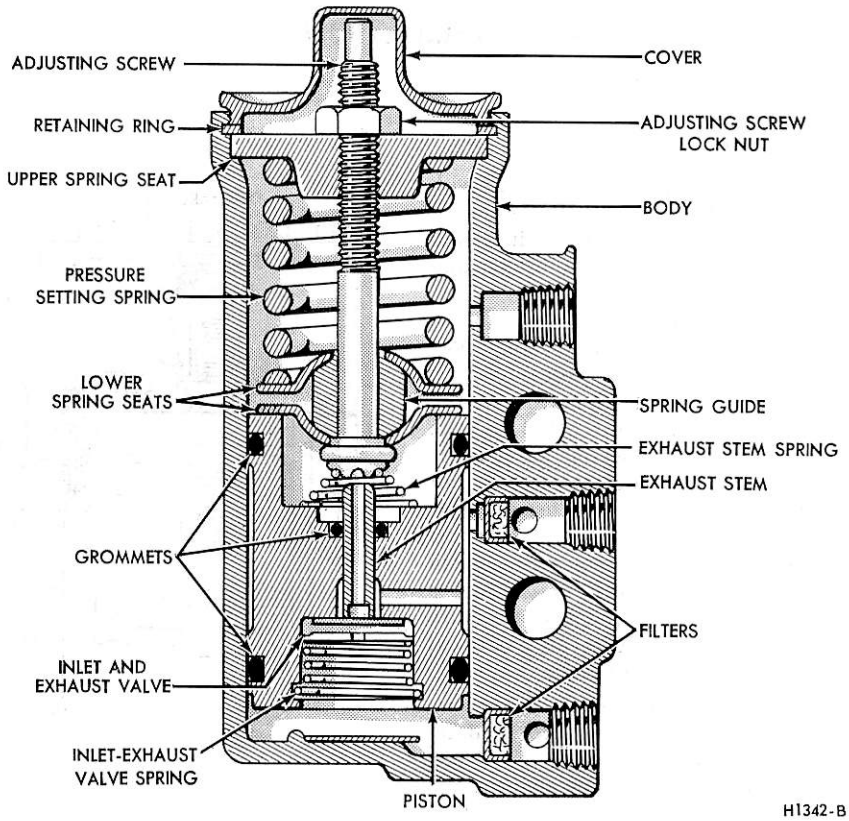

FIG. 2 Compressor Governor

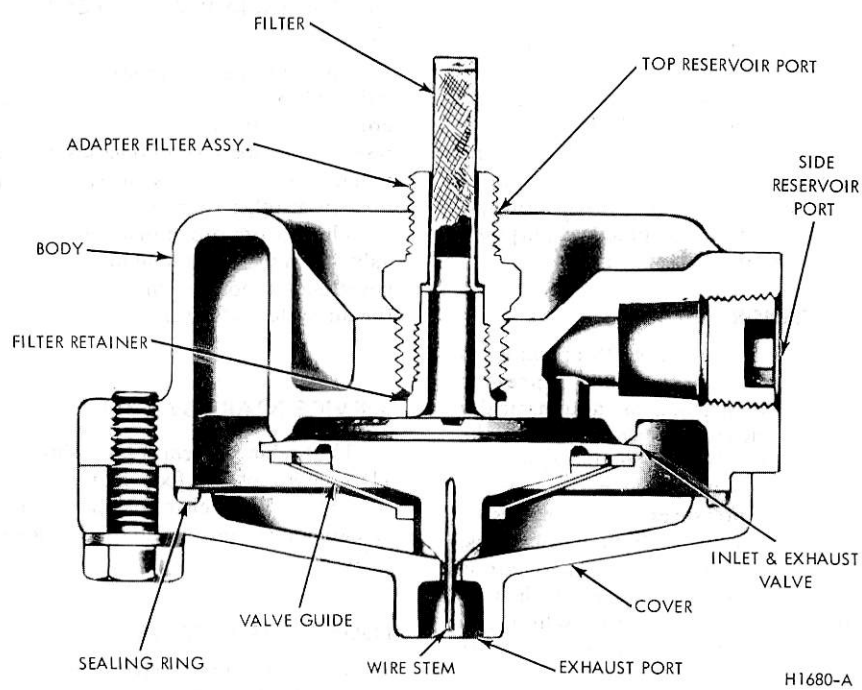

FIG. 3 Automatic Moisture Ejector Valve

HOSE HANGERS AND CONNECTORS

The trailer brake hoses (emergency line and service line) are suspended from the rear of the cab, above the rear cab window, by coil springs (Figs. 20 and 21). When the trailer is not in use, the connectors are hung on brackets at either side of the rear of the cab.

FRONT WHEEL LIMITING VALVE

The two-way limiting valve instantly limits air pressure delivery at the front wheel brake chambers according to road and load conditions and while the truck is in motion. This limited pressure at the front brakes permits the rear brakes to function with greater force than the front brakes.

The limiting valve is mounted on the dash. An air line from the delivery port of the brake control valve connects to the inlet port of the limiting valve. Another air line connects the delivery port of the limiting valve to the front quick release valve. The other two side ports of the limiting valve are connected to the front brake chambers.

The limiting valve, besides providing for a 50 percent reduction of front wheel braking pressures, also serves as a quick release valve upon release of the brakes when required by unusual road and load conditions.

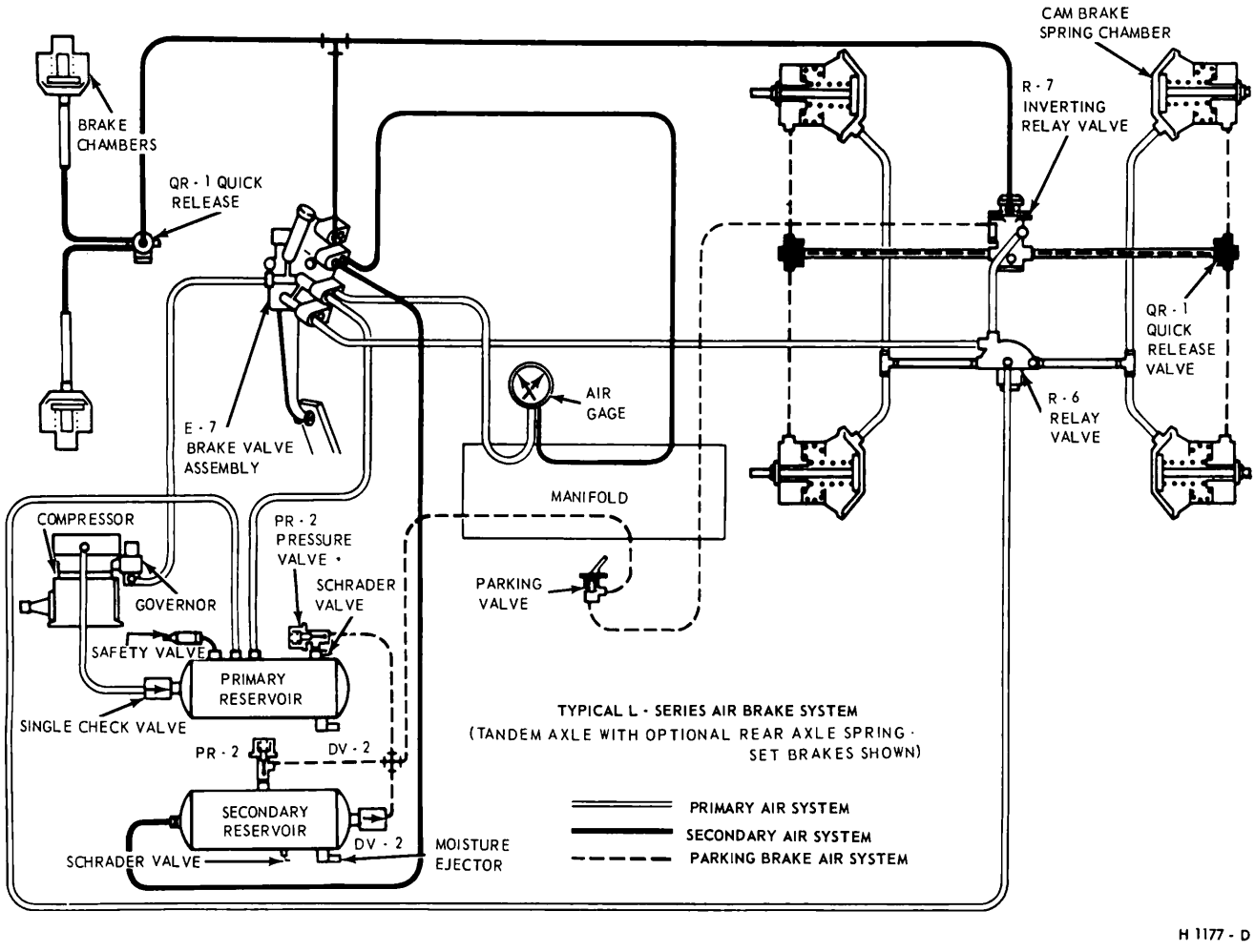

FIG. 4 Typical Air Brake System

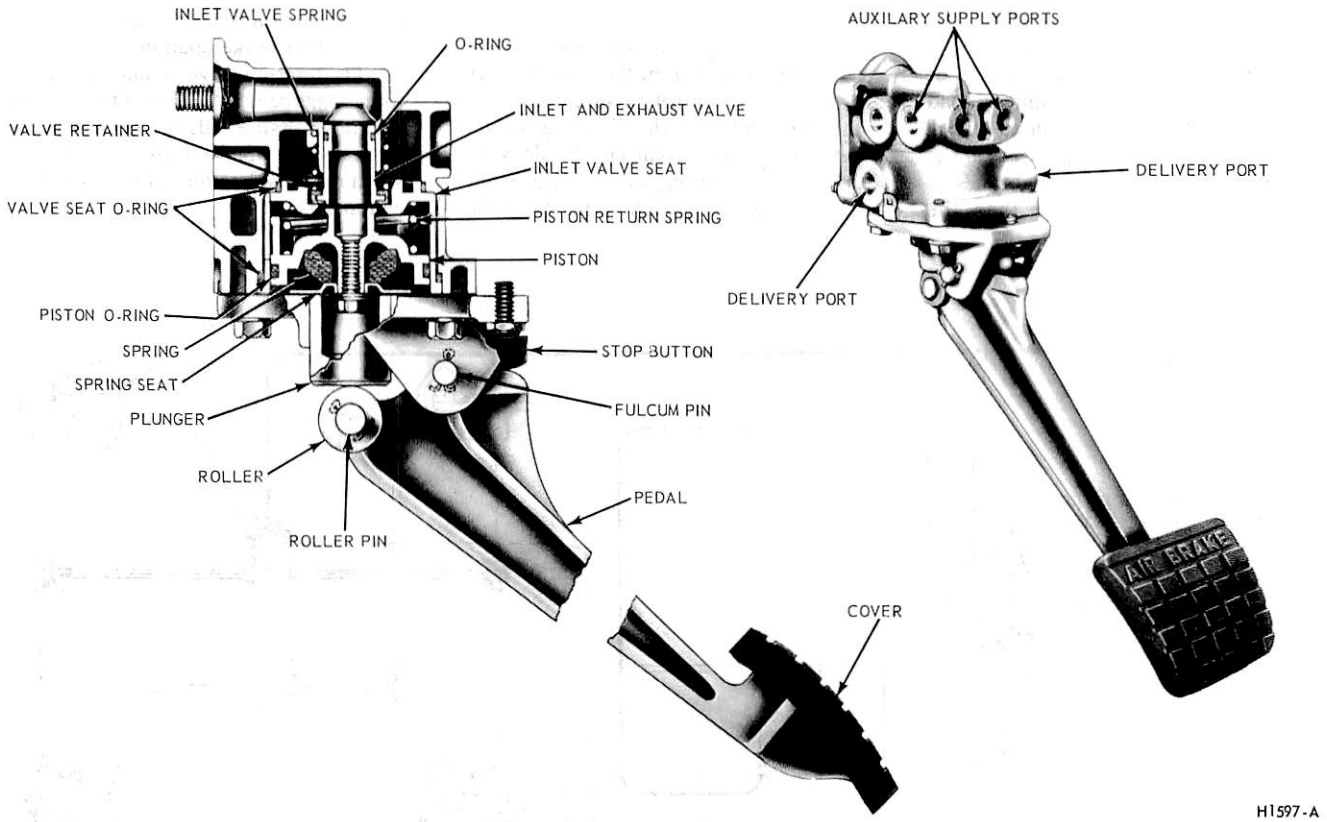

FIG. 5 Foot Control Valve Operation

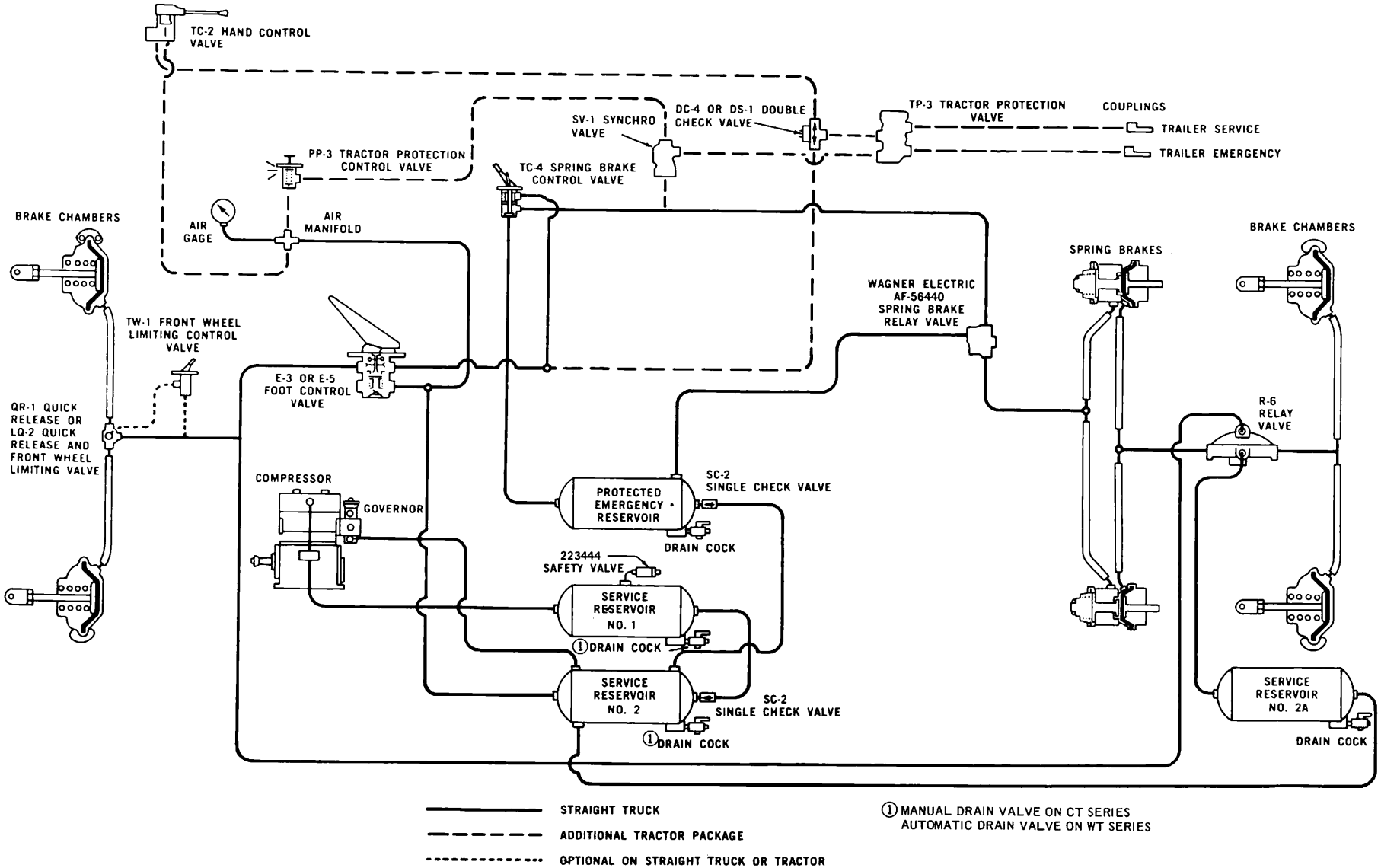

FIG. 6 Air Brake System—CT-800-900, WT-9000

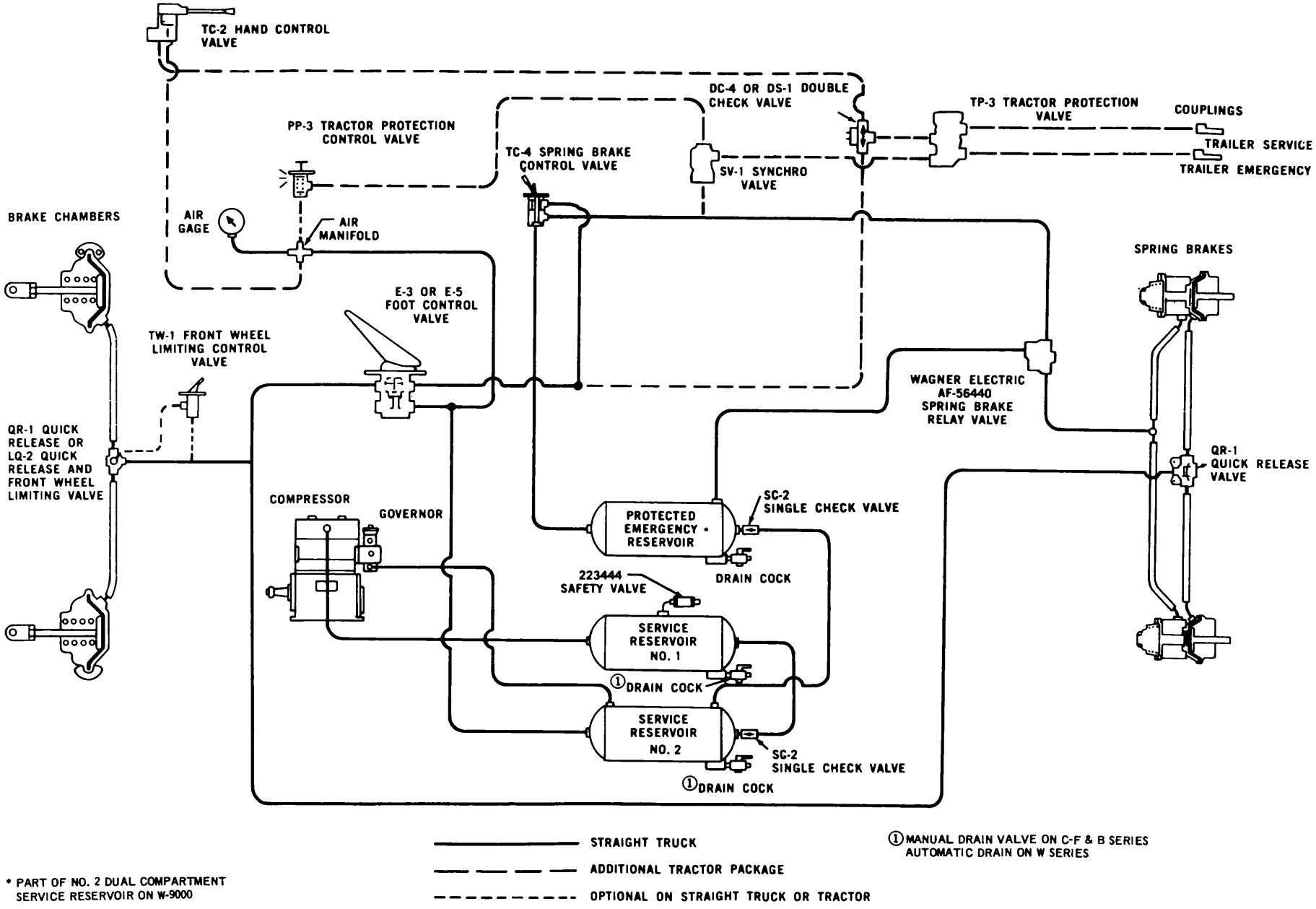

FIG. 7 Air Brake System—W-9000, C-600-900, F-B-600-750

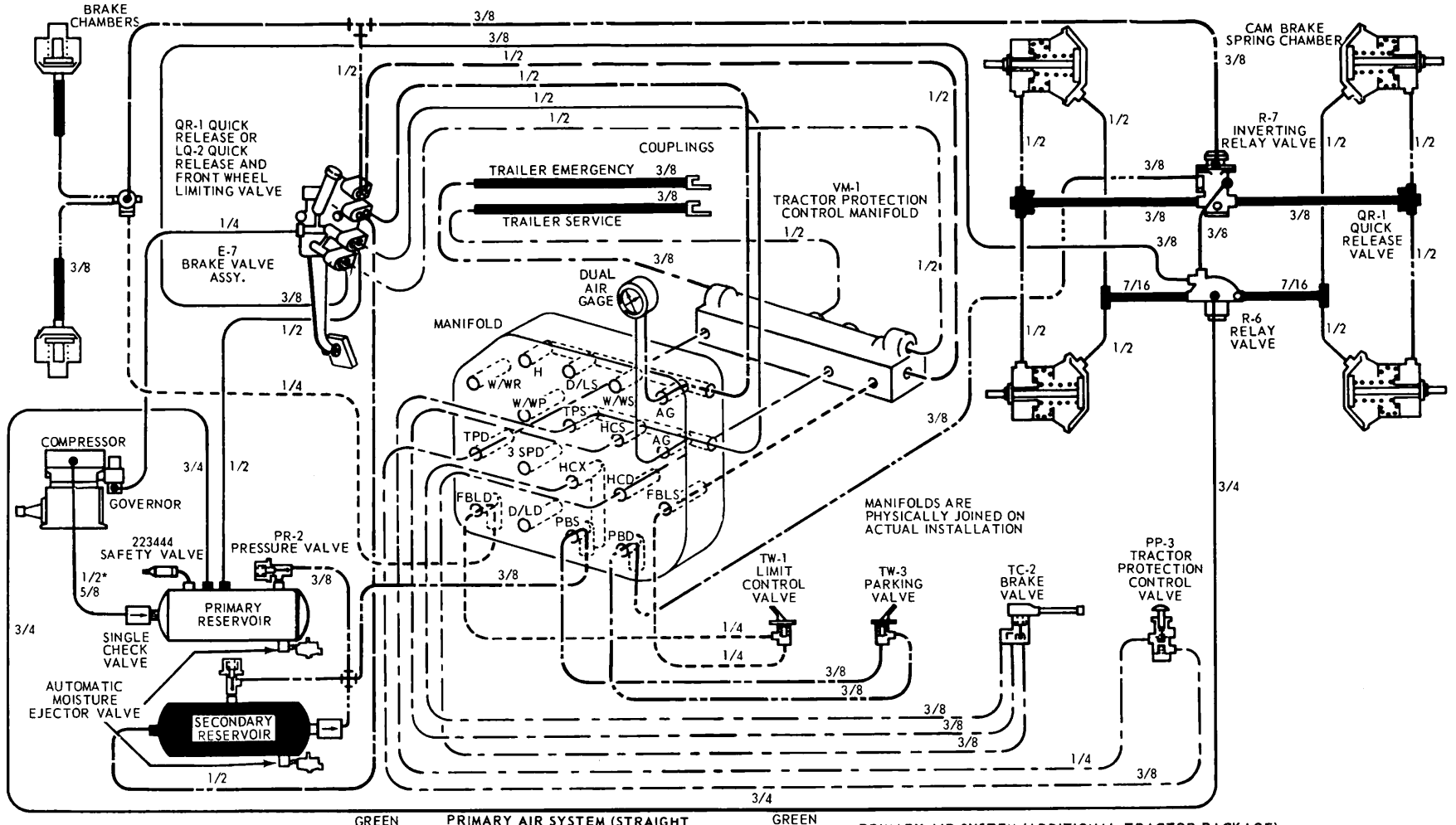

GREEN — PRIMARY AIR SYSTEM (STRAIGHT TRUCK)
RED — SECONDARY AIR SYSTEM (STRAIGHT TRUCK)
ORANGE — PARKING BRAKE AIR SYSTEM (STRAIGHT TRUCK)
GREEN — PRIMARY AIR SYSTEM (ADDITIONAL TRACTOR PACKAGE)
RED — SECONDARY AIR SYSTEM (ADDITIONAL TRACTOR PACKAGE)
RED — FRONT BRAKE LIMITING (OPTIONAL ON STRAIGHT TRUCK OR TRACTOR)

MANIFOLD SYMBOL — CONTROL VALVE

- H - - - HORN
- D/L - - - DIFFERENTIAL LOCK/OUT
- W/W - - WINDSHIELD WIPER
- AG - - - AIR GAGE
- W/WR - WINDSHIELD WIPER RUN
- W/WP - WINDSHIELD WIPER PARK
- TP - - - TRACTOR PROTECTION
- HC - - - HAND CONTROL
- 3 SP - - 3 SPEED
- FBL - - FRONT BRAKE LIMITING
- PB - - - PARKING BRAKE
- S - - - - SUPPLY
- D - - - DELIVERY
- X - - - EXHAUST

NOTE: PRIMARY AIR TANK SINGLE CHECK VALVE CAN BE CHECKED BY REMOVING THE 1/8 INCH PIPE PLUG ON COMPRESSOR DISCHARGE FITTING.

* 1/2 7-1/4 CUBIC FOOT COMPRESSOR
5/8 12 CUBIC FOOT COMPRESSOR

H 1733-C

FIG. 8 Air Brake System—LN-LNT 800-900, LT-LNT-8000-9000 (Cam Brakes)

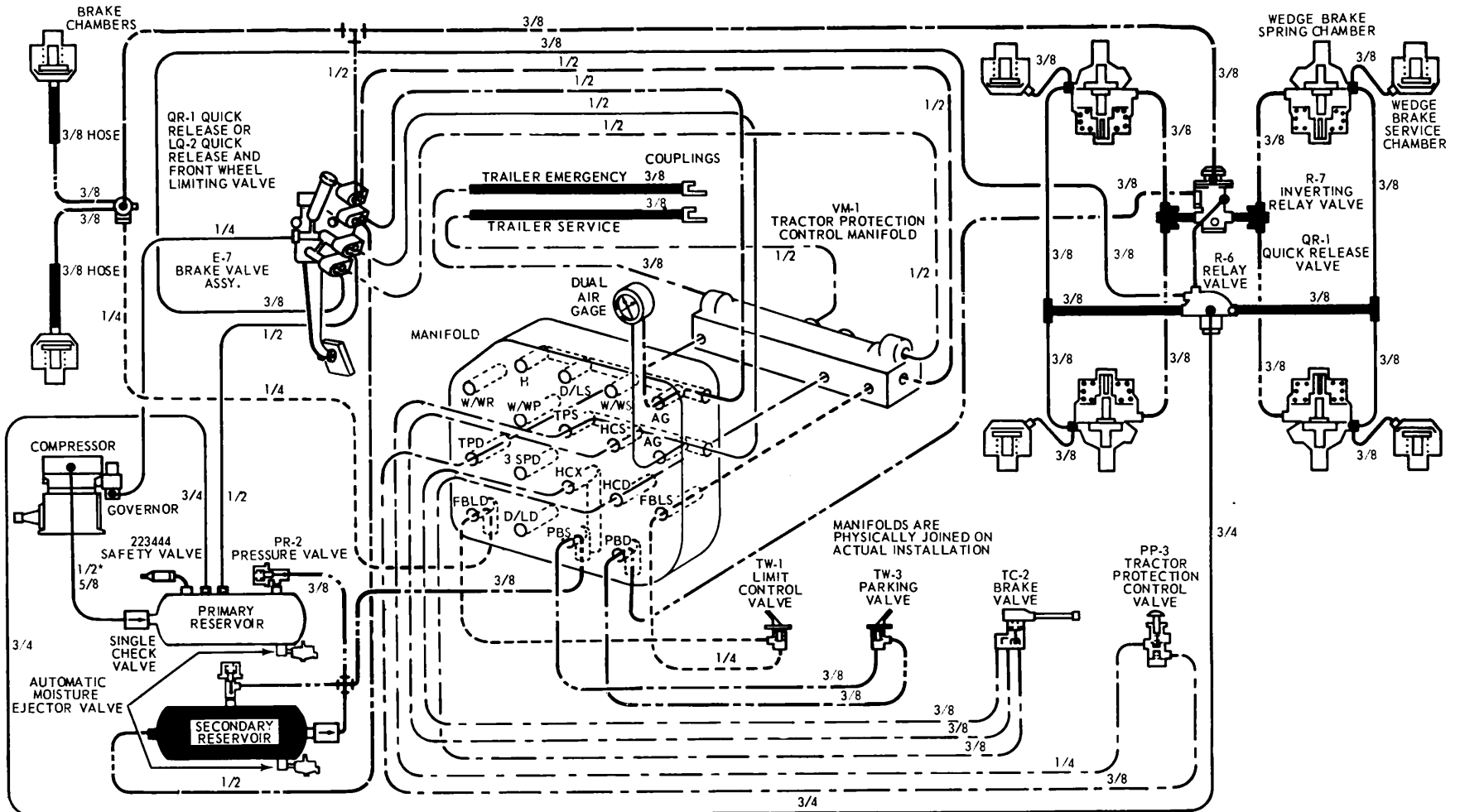

MANIFOLD SYMBOL — CONTROL VALVE

- H - - - HORN
- D L - - DIFFERENTIAL LOCK OUT
- W W - - WINDSHIELD WIPER
- AG - - AIR GAGE
- W WR - WINDSHIELD WIPER RUN
- W WP - WINDSHIELD WIPER PARK

- TP - - TRACTOR PROTECTION
- HC - - HAND CONTROL
- 3 SP - 3 SPEED
- FBL - - FRONT BRAKE LIMITING
- PB - - - PARKING BRAKE
- S - - - - SUPPLY
- D - - - DELIVERY
- X - - - EXHAUST

NOTE: PRIMARY AIR TANK SINGLE CHECK VALVE CAN BE CHECKED BY REMOVING THE 1/8 INCH PIPE PLUG ON COMPRESSOR DISCHARGE FITTING.

* 1/2 7-1/4 CUBIC FOOT COMPRESSOR
5/8 12 CUBIC FOOT COMPRESSOR

H 1734-C

FIG. 9 Air Brake System—LT-LNT 800-900, LT-LNT 8000-9000 (Wedge Brakes)

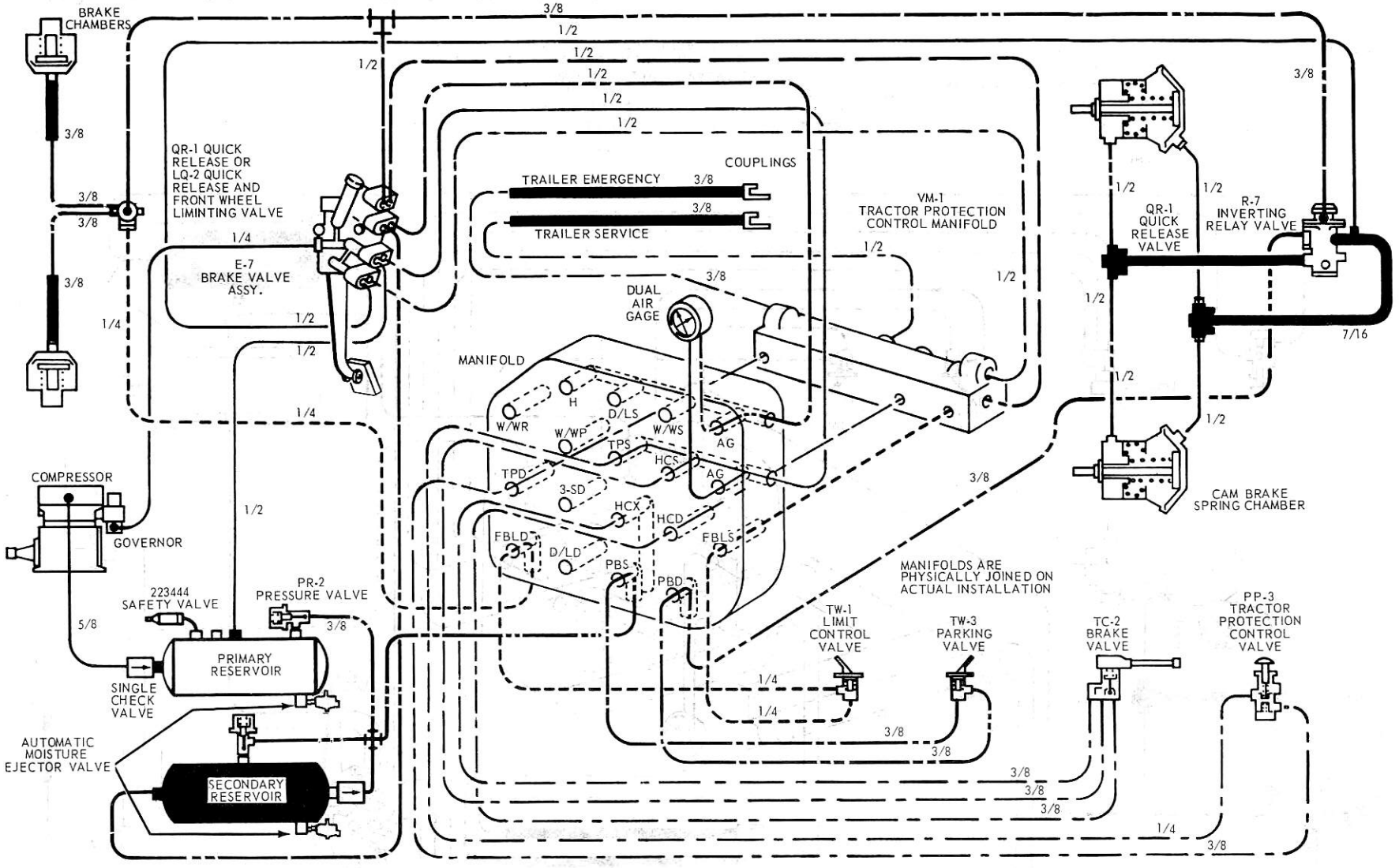

MANIFOLD SYMBOL
- H - - - HORN
- D/L - - - DIFFERENTIAL LOCK/OUT
- W/W - - WINDSHIELD WIPER
- AG - - - AIR GAGE
- W/WR - WINDSHIELD WIPER RUN
- W/WP - WINDSHIELD WIPER PARK

CONTROL VALVE
- TP - - - TRACTOR PROTECTION
- HC - - - HAND CONTROL
- 3 SP - - 3 SPEED
- FBL - - - FRONT BRAKE LIMITING
- PB - - - PARKING BRAKE
- S - - - - SUPPLY
- D - - - DELIVERY
- X - - - EXHAUST

GREEN ——— PRIMARY AIR SYSTEM (STRAIGHT TRUCK)
RED ——— SECONDARY AIR SYSTEM (STRAIGHT TRUCK)
ORANGE ——— PARKING BRAKE AIR SYSTEM (STRAIGHT TRUCK)

GREEN - - - PRIMARY AIR SYSTEM (ADDITIONAL TRACTOR PACKAGE)
RED - - - SECONDARY AIR SYSTEM (ADDITIONAL TRACTOR PACKAGE)
RED - - - FRONT BRAKE LIMITING (OPTIONAL ON STRAIGHT TRUCK OR TRACTOR)

NOTE: PRIMARY AIR TANK SINGLE CHECK VALVE CAN BE CHECKED BY REMOVING THE 1/8 INCH PIPE PLUG ON COMPRESSOR DISCHARGE FITTING

* 1/2 7-1/4 CUBIC FOOT COMPRESSOR
5/8 12 CUBIC FOOT COMPRESSOR

H 1735-C

FIG. 10 Air Brake System—L-N-600-750, L-800-900, L-8000-9000 (Cam Brakes)

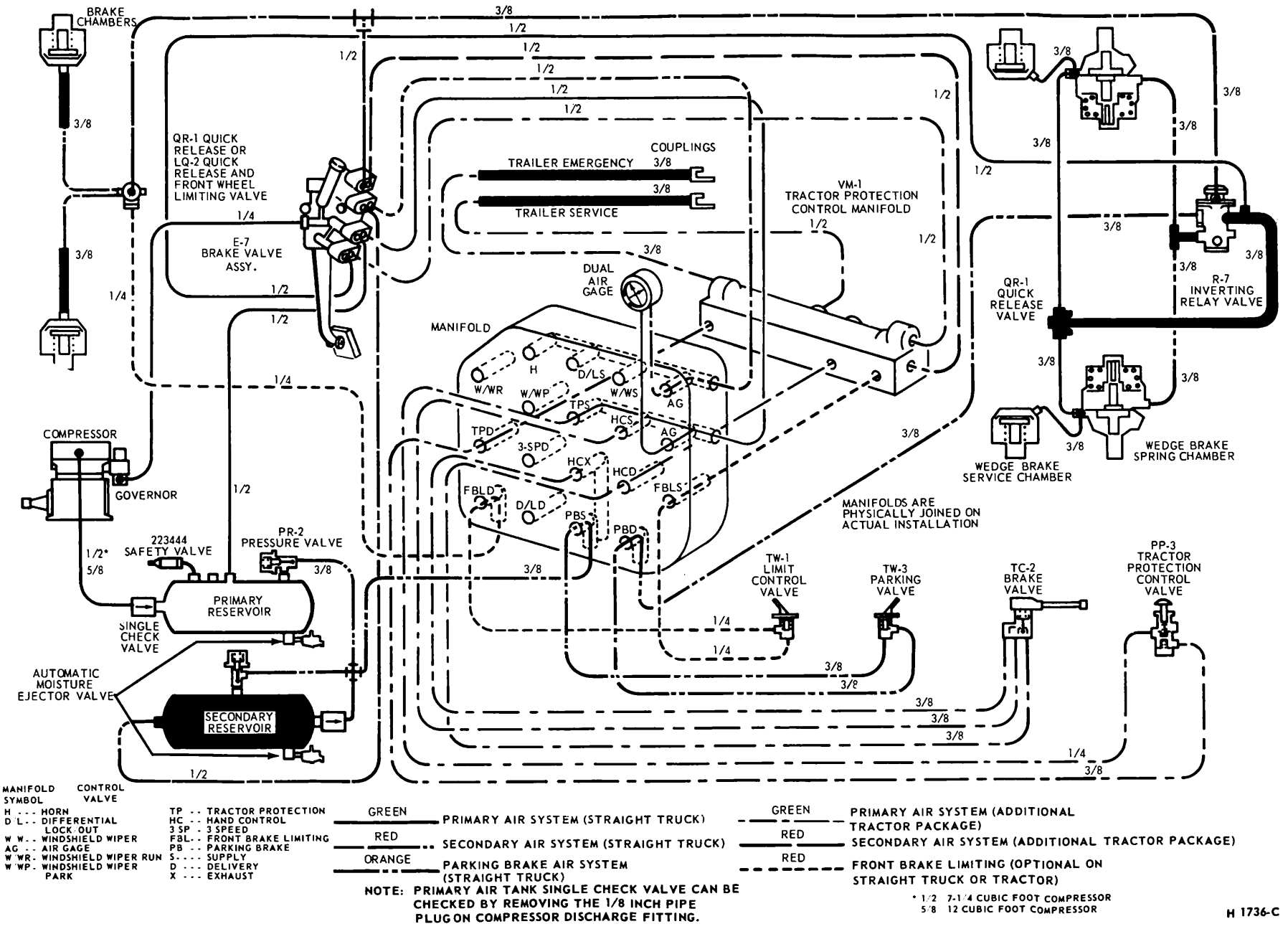

MANIFOLD SYMBOL — CONTROL VALVE

H --- HORN
D/L -- DIFFERENTIAL LOCK-OUT
W/W -- WINDSHIELD WIPER
AG -- AIR GAGE
W/WR - WINDSHIELD WIPER RUN
W/WP - WINDSHIELD WIPER PARK

TP -- TRACTOR PROTECTION
HC -- HAND CONTROL
3 SP - 3 SPEED
FBL -- FRONT BRAKE LIMITING
PB -- PARKING BRAKE
S---- SUPPLY
D --- DELIVERY
X --- EXHAUST

GREEN — PRIMARY AIR SYSTEM (STRAIGHT TRUCK)
RED — SECONDARY AIR SYSTEM (STRAIGHT TRUCK)
ORANGE — PARKING BRAKE AIR SYSTEM (STRAIGHT TRUCK)

NOTE: PRIMARY AIR TANK SINGLE CHECK VALVE CAN BE CHECKED BY REMOVING THE 1/8 INCH PIPE PLUG ON COMPRESSOR DISCHARGE FITTING.

GREEN — PRIMARY AIR SYSTEM (ADDITIONAL TRACTOR PACKAGE)
RED — SECONDARY AIR SYSTEM (ADDITIONAL TRACTOR PACKAGE)
RED — FRONT BRAKE LIMITING (OPTIONAL ON STRAIGHT TRUCK OR TRACTOR)

* 1/2 7-1/4 CUBIC FOOT COMPRESSOR
5/8 12 CUBIC FOOT COMPRESSOR

H 1736-C

FIG. 11 Air Brake system—N-600, L-800-900, LN-6000-7000, L-8000-9000 (Wedge Brakes)

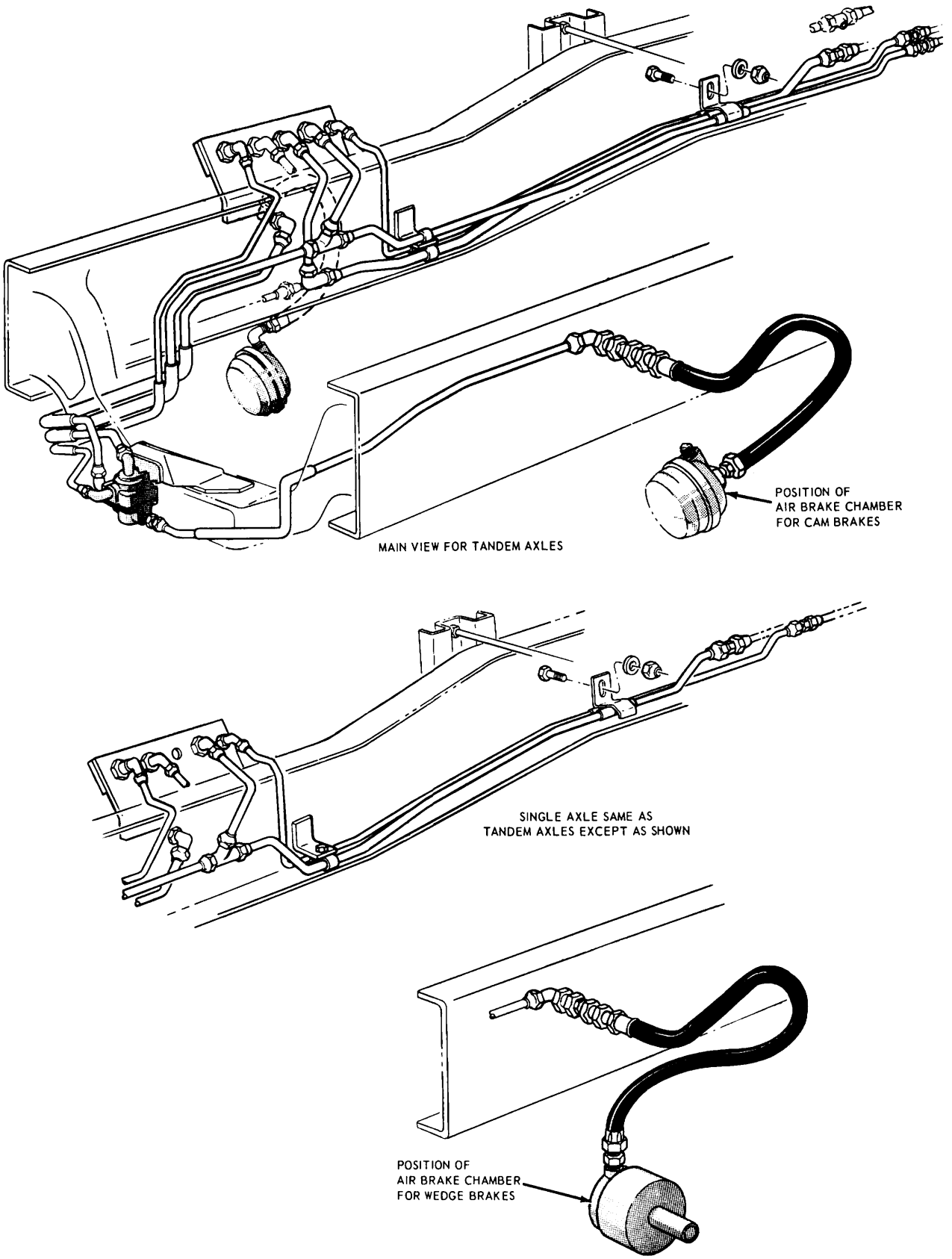

FIG. 12 Brake System Installation—W-Series—Frame and Front Axle Figure calls page.

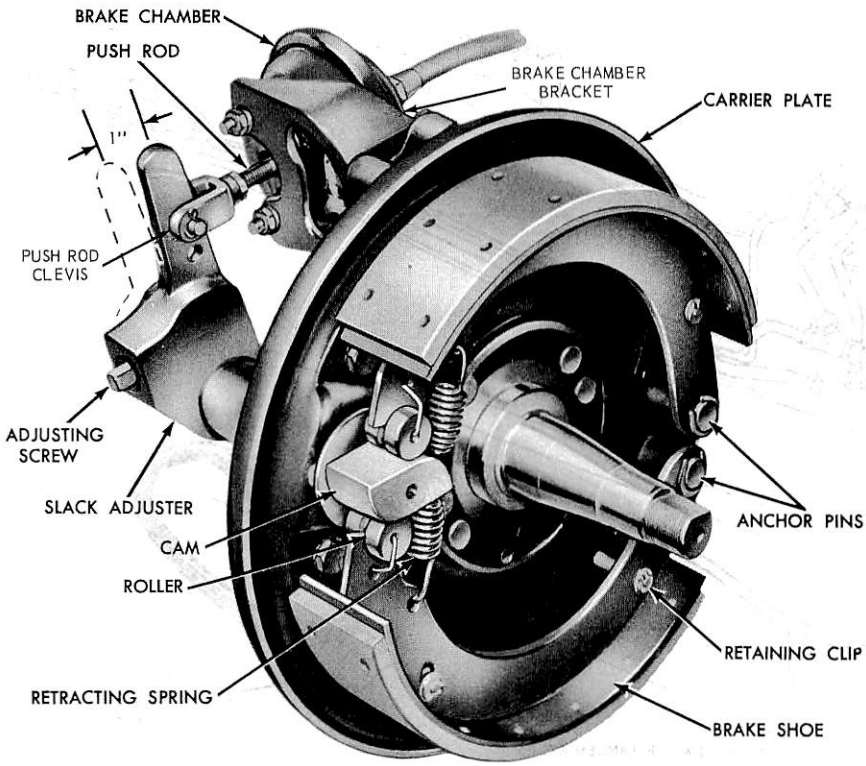

FIG. 13 Front Brake Assembly—S-Cam Type

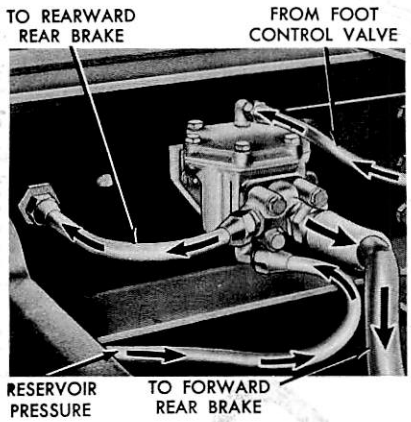

FIG. 14 Relay Valve

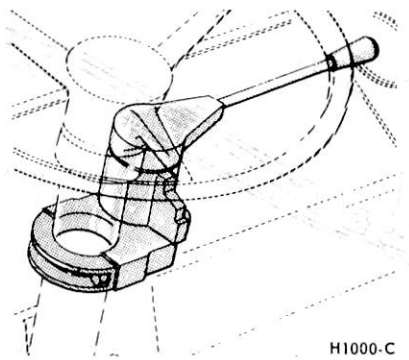

FIG. 15 Hand Control Valve

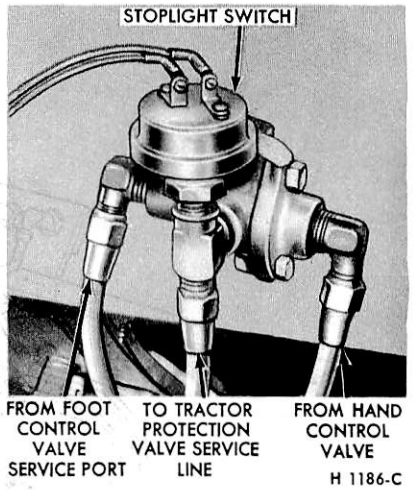

FIG. 16 Double Check Valve

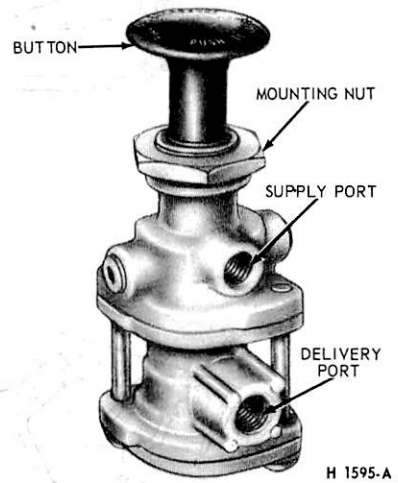

FIG. 17 Tractor Protection

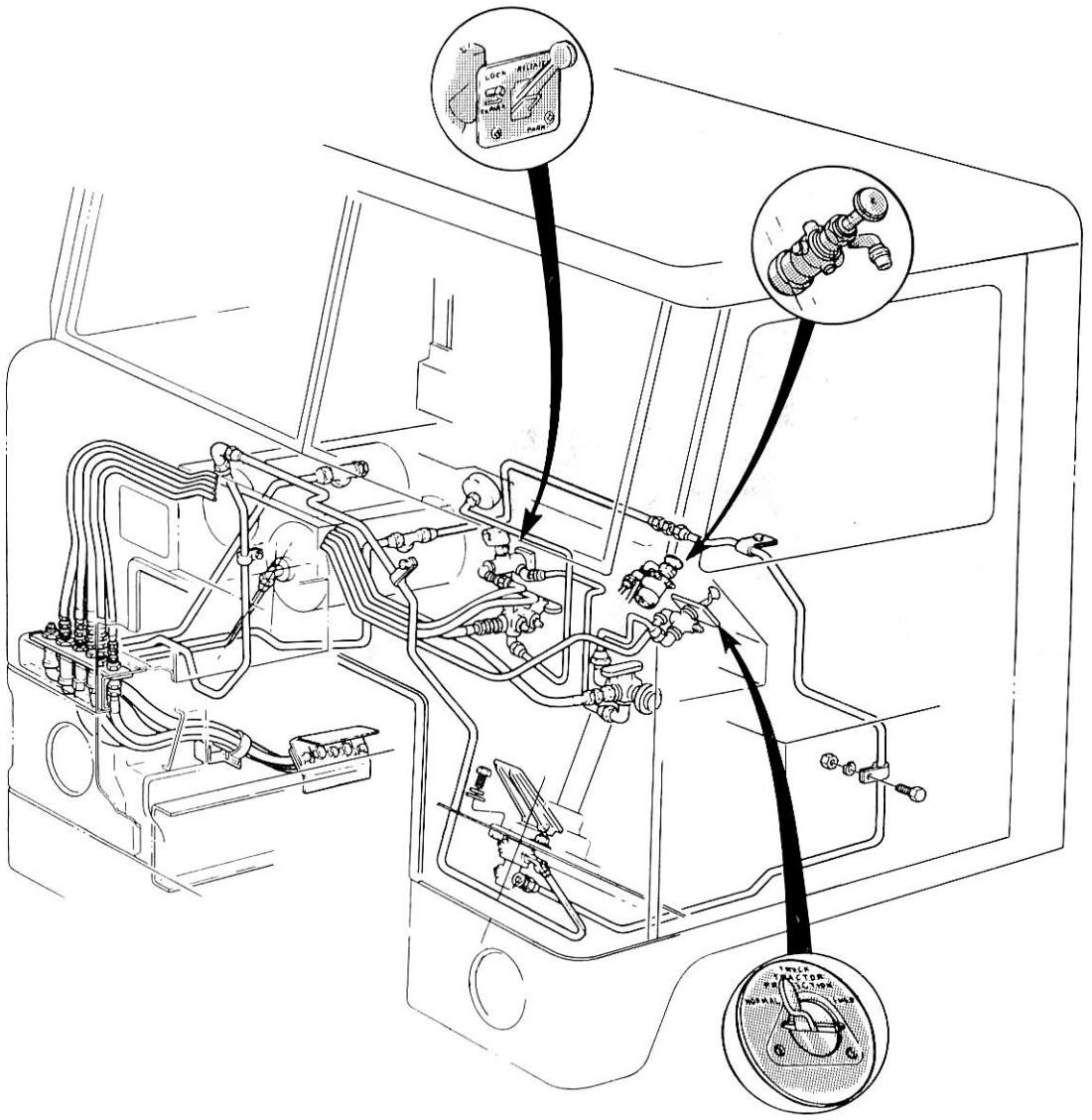

H 1434-B

FIG. 18 Brake System installation—W-Series With Tractor Protection System

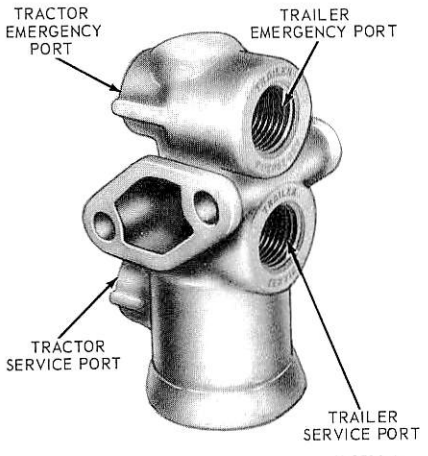

FIG. 19 Trailer Emergency Breakaway Valve

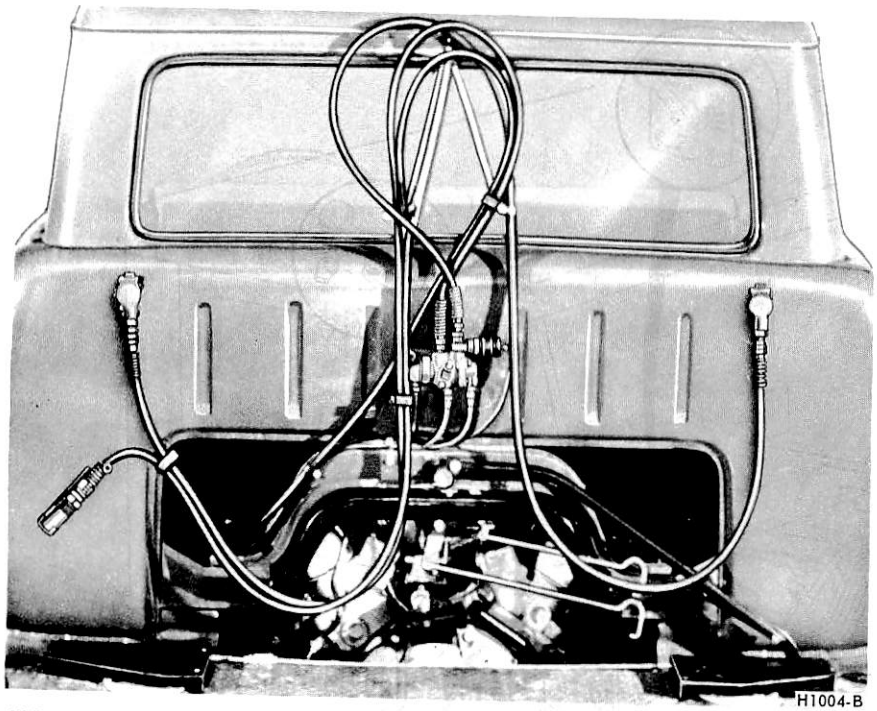

FIG. 20 Trailer Brake Hoses and Connections—Typical

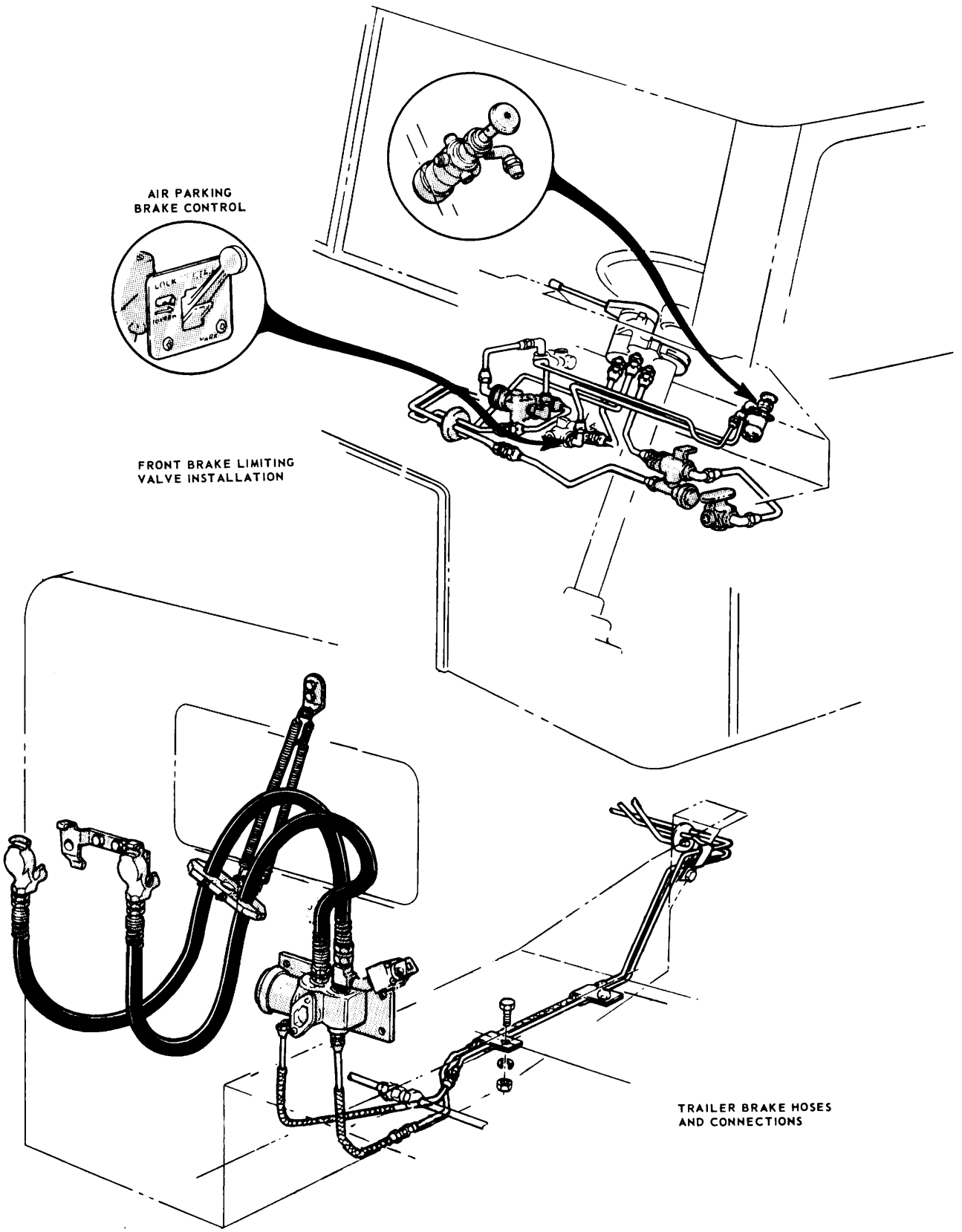

FIG. 21 Brake System Installation—W-Series—Front Brake Limiting System and Trailer

DIAGNOSIS AND TESTING

AIR SUPPLY SYSTEM OPERATING TESTS

Before performing any of the following tests, operate the engine until the air pressure builds up to 90 psi. With the air brake system charged, open the drain cocks in each reservoir. Close the drain cocks after all moisture is drained from the reservoirs. Some models have automatic moisture ejector valves and do not require manual draining.

LOW PRESSURE INDICATOR

Exhaust the brake system pressure and observe the pressure at which the warning buzzer sounds. The contacts in the indicator should close the circuit to the buzzer, when reservoir pressure is between 58 psi minimum and 65 psi maximum. If the buzzer does not start to sound within this pressure range during discharge, or if a sounding buzzer does not stop within this pressure range during the pressure buildup, the electrical connections are loose or the indicator valve is not operating properly.

RESERVOIR SAFETY VALVE

To determine if the safety valve is operative, pull the exposed end of the valve stem. If the safety valve does not blow off when the stem is pulled, the valve ball is probably stuck in its seat. In such a case, remove and disassemble the valve for cleaning.

AUTOMATIC MOISTURE EJECTOR VALVE

With the system charged, make several foot valve applications and note each time an application is made if an exhaust of air occurs at the exhaust port of the drain valve. If no air comes out, push the wire stem. If no air comes out, the filter is plugged and the valve should be removed and cleaned.

Because the automatic moisture ejector valve functions as reservoir pressure is reduced, excessive leakage in the system will cause constant exhausting of the valve.

GOVERNOR

With the engine running, build up air pressure in the system, and observe at what pressure reading on the dash gauge the pressure stops climbing. This is the point of governor cutout which should be between 118 and 126 pounds.

With the engine still running, slowly reduce the air pressure in the system by applying and releasing the brakes. Observe the pressure reading on the dash gauge at the point where the pressure starts to build up again. This is the point of governor cut-in which should be between 98 and 104 pounds.

If the governor does not cut the compressor in and out according to these specifications, adjust the governor pressure settings. Before adjusting the governor, check the accuracy of the dash gauge with a test gauge.

Check Pressure Build-Up

With the engine running at fast idle speed, observe the time required to raise system pressure from 50 to 90 pounds. If more than five minutes is required, perform the leak tests as outlined in the following paragraphs.

Also check for low engine idle speed, a slipping compressor drive belt, excessive carbon in the compressor cylinder head, or a worn out air compressor.

AIR SUPPLY SYSTEM LEAK TESTS

COMPRESSOR

With the engine stopped, discharge valve leakage can be detected by carefully listening at the compressor for the sound of escaping air. With air pressure applied to the unloader cavity (with governor cut-out), remove the air filter or the air pick up tube on SD V-8 engines and check for air leaks by squirting oil around the unloader plunger and stem. If excessive air leaks are found, replace the unloader mechanism.

GOVERNOR

With the governor in the cutout position, test for leakage at the exhaust valve by applying soap suds to the exhaust vent in the body.

With the governor in the cut-in position, test for leakage of the inlet valve by applying soap suds to the exhaust vent in the body.

In either of the foregoing tests, leakage in excess of 1 inch soap bubble in three seconds indicates the governor should be replaced.

RESERVOIR SAFETY VALVE

Coat the end of the safety valve with soap suds. Leaks causing not more than a 3 inch soap bubble in three seconds are permissible.

AUTOMATIC MOISTURE EJECTOR VALVE

With the system charged and pressure stabilized in the system, there should be no leaks at the drain valve exhaust. A constant slight exhaust of air at the drain valve exhaust could be caused by excessive leakage in the air brake system.

AIR BRAKE SYSTEM OPERATING TESTS

Some of the air brake system components vary slightly from one vehicle model to another in design or location. However, all components are essentially the same in principle and service procedure.

STOP LIGHT SWITCH CHECK

With all air pressure exhausted from the air brake system, start the engine and move the brake valve to the applied position. stop lights should light before the dash gauge registers 5 psi pressure. Release the brakes.

QUICK RELEASE VALVE AND RELAY VALVE

With the air brake system fully charged, apply the brakes. Inspect the brake action on the wheels controlled by the quick release valve or relay valve in question. The brakes should apply promptly. Release the brakes and inspect to be sure that the air pressure is exhausted rapidly from the exhaust port. Be sure the exhaust port is not restricted.

AIR BRAKE SYSTEM LEAK TESTS

With engine stopped and reservoir charged to governor cutout pressure of 118 -126 psi, the rate of pressure drop should not exceed 2 psi per minute with the service brakes released and spring (parking) brakes applied; or, 3 psi per minute after the initial pressure drop with service brakes fully applied and spring (parking) brakes released.

BRAKE CHAMBERS

With the brakes fully applied, coat the clamp ring and bolt flanges holding the diaphragm in place with soap suds. No leaks are permissible.

QUICK RELEASE VALVE

With brakes applied, coat the exhaust port with soap suds to detect leakage. Leakage is not permissible.

RELAY VALVE

With all air pressure exhausted from the air brake system, start the engine and move the brake valve to the applied position. Stop lights should light before the dash gauge registers 5 psi pressure. Release the brakes.

With the brakes **released,** coat the exhaust port with soap suds and observe the leakage.

With the brakes fully **applied,** coat the exhaust port with soap suds and observe the leakage.

Leakage in either of the foregoing tests should not exceed a 3 inch soap bubble in three seconds.

ADJUSTMENTS

AIR COMPRESSOR DRIVE BELT ADJUSTMENT

If the reservoir pressure will not rise to normal or rises too slowly, a slipping compressor drive belt could be the cause.

VERTICALLY-MOUNTED COMPRESSOR ADJUSTMENT

1. Loosen the bolts that attach the compressor to the mounting bracket (Fig. 22).

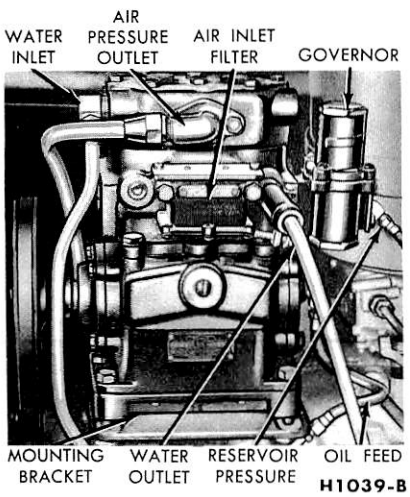

FIG. 22 Air Compressor—Vertically Mounted

2. Slide the compressor away from the fan pulley until a 1/2 inch belt deflection (with thumb pressure) is established.
3. Tighten the compressor attaching bolts.

SIDE-MOUNTED COMPRESSOR ADJUSTMENT

1. Loosen the idler pulley bracket pivot bolt and adjusting bolt (Fig. 23).

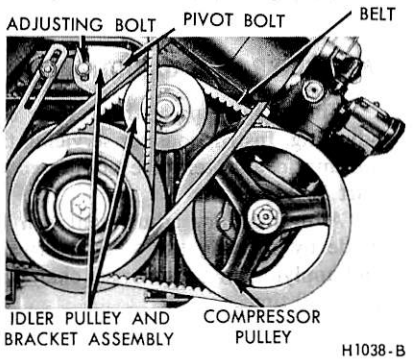

FIG. 23 Belt Adjustment on Side-Mounted Compressor

2. Pivot the idler bracket and pulley against the belt until 1/2 inch belt deflection (with thumb pressure) is established.
3. Tighten the adjusting bolt and pivot bolt with the idler bracket and pulley assembly in the properly adjusted position.

GOVERNOR ADJUSTMENT

Before adjusting the pressure settings of the governor, determine the accuracy of the dash gauge by checking gauge readings against an accurate test gauge. The cut-in and cut-out setting is made at the adjusting screw (Fig. 2).

1. With the engine running, build up air pressure in the system and observe the pressure registered by the dash gauge.
2. If the pressure build-up continues beyond 125 pounds before the governor cuts out, remove the cover from the top of the governor and loosen the lock nut. Turn the adjusting screw clockwise to lower the cut-out pressure and counterclockwise to increase the cut-out pressure. After adjusting the cut-out pressure, tighten the adjusting screw lock nut and install the cover. **The air pressure range between cut-out pressure (maximum) and cut-in pressure (minimum) is fixed at about 20-25 pounds and cannot be adjusted.**

AIR RESERVOIR SAFETY VALVE ADJUSTMENT

The air reservoirs are connected into the air brake system. Drain cocks are provided at the bottom of each reservoir. A safety valve is installed on one of the reservoirs.

When servicing the reservoirs, removal or installation of the air tube between the reservoirs can be made by loosening the reservoirs from the frame.

The safety valve is set to relieve pressure at 150 psi. It is non-adjustable and must be replaced if excessive system pressures are indicated (above the 150 psi setting).

AIR LINES

Any portion of the tubing that is kinked, or pinched, should be replaced to prevent restrictions.

When repairs are performed, use the tubing conforming to specification. A new insert (Fig. 24) should be used in order to prevent leaks or collapsing of the tubing. The tubing end must be cut square and also bottomed against the insert while tightening the nut.

FOOT CONTROL VALVE ADJUSTMENT

To determine if the brakes are applying properly, proceed as follows:

1. Install a pressure gauge anywhere in the circuit between the control valve and the brake chambers, or install the gauge in one of the extra brake service ports (upper row of ports).
2. Fully depress the brake treadle. The test gauge reading should approximate reservoir pressure as indicated by the dash gauge.
3. Adjust the stop, button on the suspended pedal (Fig. 5) to eliminate pedal free travel.

SLACK ADJUSTER ADJUSTMENT—CAM OPERATED BRAKES

Apply the brakes and measure the travel of the brake chamber push rod (Fig. 13). If equipped with a Maxi brake unit, the minimum air pressure should be 90 psi while measuring the travel.

The travel should be kept to the minimum possible without causing the brakes to drag. The maximum travel should not exceed the dimensions listed in the specifications. **Adjustment of the yoke on the brake chamber push rod should not be changed. When new, the yoke is adjusted so that the slack adjuster brake chamber push rod angle is slightly greater than 90 degrees when the brakes are properly adjusted and the brakes are applied. Brake lining wear will not change this angle as long as the slack adjusters are kept adjusted to compensate for lining wear.**

FRONT

This procedure applies only to trucks equipped with S-cam operated brakes.

A push rod travel, that reaches or exceeds the maximum listed in the Brake Chamber Push Rod Adjustment table in specifications indicates need of adjustment. Turn the adjusting screw clockwise until the push rod travels 3/4 inch in going from released to fully applied position (Fig. 13). When making the adjustment, turn the screw in quarter turns.

REAR

This procedure applies to vehicles equipped with either standard or Maxi-brake S-cam type slack adjusters.

A push rod travel, that reaches or exceeds the maximum listed in the Brake Chamber Push Rod Adjustment table in specifications indicates need of adjustment. Depress the lock sleeve and turn the hexagon head of the wormshaft clockwise until the push rod travels one inch in going from released to fully applied position (Fig. 25). Be sure that the lock sleeve comes back out and engages the hexagon head of the wormshaft so as to lock the adjustment.

When adjusting either front or rear slack adjusters, raise the wheels and make certain that there is no brake drag.

WEDGE BRAKE ADJUSTMENT

The wedge type air brakes are self adjusting. Instructions for servicing the automatic adapters are contained in Part 12-44.

A preliminary adjustment can be made by rotating the wheels forward and applying air to the brake chambers 25 or 30 times.

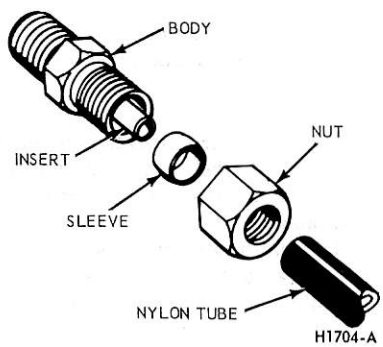

FIG. 24 Air Line Coupling

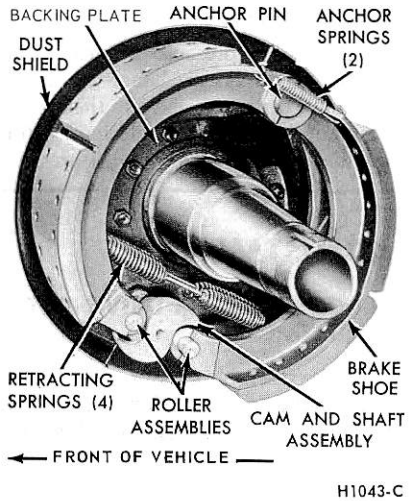

FIG. 25 Rear Brake Assembly—S-Cam (Eaton)

REMOVAL AND INSTALLATION

AIR COMPRESSOR

VERTICALLY-MOUNTED COMPRESSOR—WITH GAS—ENGINE VEHICLES

Removal

Depending upon the particular vehicle model and engine, compressors are mounted in various locations. Removal and installation procedures differ between vertically mounted units and side mounted units. These instructions apply generally to liquid-cooled compressors, but air-cooled installations are similar, other than coolant connections.

1. Open the reservoir drain cocks to exhaust air pressure from the system.
2. Drain the cooling system.
3. At the compressor, disconnect the compressor air outlet line, the water inlet and outlet lines and the oil feed and oil return lines (Fig. 22).
4. Since the reservoir pressure hose is difficult to remove at the governor, disconnect the hose at the fitting on the opposite end. If the hose is to be replaced, disconnect it from the governor after the compressor has been removed.
5. Remove the four compressor to base plate bolts, slide the compressor inward on the base plate and disengage the drive belt; then remove the compressor.

Installation

1. Transfer the pulley, Woodruff key and attaching nut to the new compressor.
2. Transfer the air outlet elbow and gasket, the water inlet and outlet fittings, and the oil inlet and outlet fittings to the new compressor. Apply sealer to all these parts.
3. Transfer the governor and gasket to the new compressor (two attaching bolts). Apply sealer. If the reservoir pressure hose is to be replaced, connect it to the governor at this time.
4. Transfer the air inlet filter and gasket to the new compressor (two retaining bolts). Apply sealer.
5. Position the compressor on the base plate and engage the drive belt to the pulley.
6. Install the four attaching bolts, slide

the compressor away from the fan pulley until a 1/2 inch belt deflection is obtained, and tighten the bolts.
7. Connect the compressor air outlet line, the water inlet line and the water outlet line to the compressor. Connect the oil feed and the oil return lines to the compressor.
8. Connect the hose from the governor to the fitting on the reservoir pressure line.
9. Fill the cooling system, close the reservoir drain cocks, start the engine and check for air, oil or coolant leaks, if applicable.

SIDE-MOUNTED COMPRESSOR—WITH GAS—ENGINE VEHICLES

Removal
1. Drain the cooling system, and open the reservoir drain cocks to exhaust air pressure from the system.
2. Loosen the idler pivot bolt and adjusting bolt, and remove the compressor belt (Fig. 23).
3. At the compressor, disconnect the air outlet line, and the water inlet and outlet lines.
4. Disconnect the reservoir pressure line from the governor.
5. Remove the bracket bolt at the cylinder head and the bracket bolt and washer at the manifold, then remove the bracket between the exhaust manifold and the cylinder head.
6. If equipped with power steering, remove the attaching bolt nut and lockwasher from the clip at the frame side rail. Also, remove the power steering hose retaining bolt, nut, and lockwasher at the frame crossmember and set the hoses out of the way.
7. Remove the two front compressor to base plate attaching bolts. The clearance between the compressor base plate and the engine mount is very small.
8. Remove the three remaining bolts.
9. Remove the air compressor from underneath the vehicle in a rearward direction and discard the base gasket.

Installation
1. Remove the compressor pulley cotter pin and Woodruff key, then pull the pulley off the shaft with a puller.
2. On C-Series vehicles, install the compressor pulley on the replacement compressor at this point. On all other models with a side-mounted compressor, do not install the pulley until after the compressor has been installed.
3. Transfer the air outlet and the water inlet and outlet fittings to the replacement compressor. Coat the threads with sealer.
4. Transfer the air inlet strainer and gasket to the replacement compressor (two attaching bolts). Apply sealer.
5. Transfer the governor and gasket to the new compressor (two attaching bolts). Apply sealer.
6. Clean the compressor base and cylinder block base plate (Fig. 26).
7. Apply sealing compound to both sides of base gasket.
8. Install pilot studs in the two rear bolt holes shown in Fig. 5 and position the base gasket to the base plate over the studs. From underneath the vehicle, mount the compressor to the pilot studs and install three attaching bolts. Remove the pilot studs and install the remaining two bolts.
9. If equipped with power steering, position the power steering hose at the frame crossmember and install the clip retainer, bolt, lockwasher, and nut.
10. Connect the water outlet line to the compressor.
11. Position the power steering tube clips at the frame side rail and secure with bolt, lockwasher and attaching nut.
12. Connect the water inlet line to the compressor.
13. On all except C-Series, loosen the two power steering belt adjustment bolts and loosen the belt to provide clearance for installation of the compressor pulley. Install the compressor pulley to the shaft and secure with the nut and cotter pin.
14. Position the power steering belt on the pulleys and adjust the belt tension.
15. Position the air compressor belt on the pulleys and adjust the belt tension (Fig. 23).
16. Connect the air outlet line to the compressor.
17. Connect the reservoir pressure line at the governor.
18. Fill the cooling system, close the air reservoir drain cocks, and build up pressure in the system.

AIR COMPRESSOR WITH FORD DIESEL ENGINES

Removal
1. On C-Series vehicles, release the cab locks and tilt the cab forward.
2. Drain the cooling system. Open the air reservoir drain cocks to exhaust air pressure from the system.
3. Loosen the air outlet line at the air compressor (Fig. 27), and allow the air to escape. Disconnect the air outlet line. Disconnect the governor air line at the air compressor governor.
4. Disconnect the water supply and return lines at the air compressor (Fig. 28).
5. Disconnect the oil supply and oil return lines at the air compressor (Fig. 28).
6. Remove the three compressor mounting bolts. Disengage the drive gear, and remove the compressor.

Installation
1. Position the air compressor on the mounting bracket attached to the engine front support plate. Engage the drive gear.
2. Connect the oil supply and return lines to the compressor (Fig. 28).
3. Connect the water supply and return lines to the compressor.
4. Connect the governor air line and the air outlet line to the compressor (Fig. 27).
5. Fill and bleed the cooling system.
6. Close the air reservoir drain cocks.
7. Start the engine and check for air, coolant and oil leaks.
8. On C-Series, tilt the cab rearward and secure with the cab locks.

AIR COMPRESSOR—CUMMINS DIESEL NH SERIES ENGINES

The air compressor is flange mounted to the accessory drive and is driven by a splined-sleeve type drive coupling from the accessory drive shaft. The fuel pump is flange mounted to the rear of the air compressor and must be removed before the air compressor can be removed.

The following procedures and illustrations are for the standard Bendix Westinghouse unit, but are typical of the Cummins unit which is mounted in the same manner.

Removal
1. Unlock the tilt cab on W-Series trucks. Partially drain the cooling system, and exhaust the air reservoirs.
2. Disconnect the throttle linkage and lines from the fuel pump, and remove the fuel pump from the air compressor as described in Group 23.
3. Remove the rubber coupling from the drive unit (Fig. 29).
4. Remove the two governor-to-compressor attaching screws, and position the governor out of the way.
5. Disconnect the air compressor oil inlet line at the engine block (Fig. 30).
6. Remove the oil return tube from the bottom of the compressor and the engine block.

7. Disconnect the water inlet and outlet lines and the air inlet and outlet lines from the compressor (Figs. 29 and 30).
8. Remove the two nuts and lockwashers that hold the compressor to the support bracket, and the four cap screws and lockwashers that hold the compressor to the accessory drive (Fig. 29).
9. Remove the compressor and the splined accessory drive coupling (Fig. 31). Discard the old gasket.
10. If the compressor is to be replaced:
    a. Remove the compressor drive gear attaching nut, then remove the drive gear from the compressor crankshaft using a universal puller (Fig. 31).
    b. Remove the attaching nut and the fuel pump drive gear from the rear end of the compressor crankshaft.
    c. Remove the water inlet and outlet fittings, air outlet fitting, and the oil return fitting (Figs. 29, 30 and 31).
    d. Remove the air inlet housing and screen (Fig. 31).
    e. Remove the oil inlet line from the compressor drive and fuel pump flange.

Installation

1. If the compressor is being replaced:
    a. Install the oil inlet line on the fuel pump flange.
    b. Install the air inlet housing and screen (Fig. 31).
    c. Install the water inlet and outlet fittings, air outlet fittings, and the oil return fitting (Figs. 29, 30 and 31).
    d. Install the fuel pump drive gear and attaching nut to the rear of the compressor crankshaft.
    e. Install the compressor drive gear and retaining nut.
2. Assemble the splined accessory drive coupling to the compressor drive gear (Fig. 31), and mount the compressor to the accessory drive, using a new gasket. Install and tighten the four cap screws and lockwashers (Fig. 29).
3. Attach the compressor to the support bracket with two nuts and lockwashers.
4. Connect the water inlet and outlet lines (Fig. 30) and the air inlet and outlet lines to the compressor (Figs. 29 and 30).
5. Connect the air compressor oil return tube at the bottom of the compressor and at the engine cylinder block (Fig. 30).
6. Connect the air compressor oil inlet line to the engine block.
7. Mount the governor to the compressor, and install the two governor-to-compressor attaching screws (Fig. 29).
8. Install the fuel pump to the compressor rear flange with a new gasket and rubber coupling in position (Figs. 29 and 31), then connect the throttle linkage and lines as described in Group 23.
9. Fill the cooling system, and charge the reservoirs.

AIR COMPRESSOR—CUMMINS DIESEL V-6 ENGINES

The Cummins air compressor is used on vehicles equipped with V-6 engines. The compressor is flange mounted to an accessory gear case which is located at the rear of the engine between the two cylinder banks. The unit is driven by a gear which is keyed to the compressor crankshaft, and which enters the accessory gear case where it is driven by the camshaft gear. The fuel pump is flange mounted to the front of the air compressor and must be removed before the air compressor can be removed.

Removal

On W-Series trucks, unlock the tilt cab. On Wand LN-Series trucks, the air intake system components have to be removed to obtain access for compressor removal.

1. Disconnect the air intake duct from the air cross-over manifold (Fig. 32).
2. Loosen the hose clamps on the cross-over manifold connection hose.
3. Loosen the compressor air intake hose at the air cross-over manifold and at the compressor.
4. Remove the attaching bolts and the right hand air cross-over manifold from the intake manifold.
5. Disconnect the throttle linkage and lines from the fuel pump, and remove the fuel pump from the front of the compressor as described in Group 23.
6. Drain the cooling system and exhaust the air reservoirs.
7. Disconnect the air outlet line from the compressor.
8. On L-and LT-Series trucks, loosen the compressor air intake hose clamps at the main intake duct and at the compressor.
9. On L-, LT-and LN-Series trucks, remove the floor pan cover at the gear shift lever to obtain access to the line connections and the rear of the compressor.

   On W-Series trucks, this access is obtained by tilting the cab at the beginning of the removal procedure.
10. Disconnect all air lines at the governor.
11. Disconnect the water lines at the air compressor, the cylinder block, and at the water crossover connection.
12. Unclamp any water or air lines as necessary to provide clearance for compressor removal.
13. On L-, LT-and LN-Series trucks, remove the water crossover pipe from the rear of the cylinder heads in order to gain access to the accessory drive rear support plate. On W-Series trucks, it is not necessary to remove the crossover pipe because the crossover pipe goes over the top of the accessory gear case as shown in Fig. 33.
14. Remove the bolts and lockwashers that secure the rear support plate and the compressor to the accessory gear case. Remove the rear support plate from the rear side of the gear case (Fig. 33), and remove the compressor from the front side of the gear case.

Installation

1. Clean the gasket material from the compressor, gear case, and accessory drive rear support plate.
2. Position the air compressor with a new gasket to the front side of the gear case so that the timing marks on the air compressor drive gear are aligned with the marks on the camshaft gear (Fig. 33). Be sure that the gears mesh properly.
3. Position the accessory drive rear support plate with a new gasket to the rear side of the gear case, then secure the support plate and air compressor to the gear case with the lockwashers and attaching bolts.
4. On L-, LT-and LN-Series trucks, clean the gasket material from the water crossover pipe and the rear of the cylinder heads. Position the crossover pipe to the cylinder heads with new gaskets and install the attaching bolts.
5. Connect the two water lines (compressor-to-cylinder block and compressor-to-water crossover connection).
6. Connect the main air outlet line to the compressor.
7. Connect to the governor all air lines that were disconnected during removal.
8. On L-and LT-Series trucks, connect the compressor air intake hose and secure with two clamps.
9. Secure any water to air line-to-sheet metal clamps that were disconnected during removal.
10. On L-, LT-and LN-Series trucks,

install the floor pan cover at the gear shift lever.

11. Clean the gasket material from the pump mounting surface, position a new gasket, install the fuel pump to the front side of the compressor, and connect the throttle linkage and lines as described in Group 23.
12. On L-and LT-Series trucks, fill the cooling system, charge the reservoirs and check for leaks.

On W-and LN-Series trucks, first install the air intake system components as outlined in the following procedure.

13. Install the right air crossover manifold to the engine intake manifold, connect the compressor air intake hose to the crossover manifold and to the compressor, and position the connection hose on the right and left crossover manifolds (Fig. 32).
14. Install the air crossover manifold attaching bolts, and tighten the two clamps on the compressor air intake hose.
15. Tighten the clamps on the connection hose.
16. Connect the air intake duct to the air crossover manifold and tighten the clamp.
17. Fill the cooling system, charge the reservoirs, and check for leaks.

GOVERNOR

Removal

The governor is mounted to the compressor with two attaching bolts. Mating ports in the governor and compressor bodies connect governor pressure to the unloading pistons in the compressor. Reservoir pressure is connected to the governor through a hose or tube.

1. Exhaust the air brake system.
2. On vertically-mounted units, disconnect the governor hose (end opposite governor) from the fitting in the reservoir pressure line. On side-mounted units, disconnect the pressure line at the governor.
3. Remove the two attaching bolts, then remove the governor.

Installation

1. On vertically-mounted units, transfer the hose to the replacement governor.
2. Install the governor and gasket and the two attaching bolts to the compressor. Apply sealer.
3. On vertically-mounted units, connect the hose to the fitting on the reservoir pressure line. On side-mounted units, connect the pressure line to the governor.
4. Test the governor as outlined in Diagnosis and Testing.

PRESSURE INDICATOR VALVE

The low pressure indicator valve is mounted at the passenger side of the dash panel (Fig. 34), and taps into a reservoir pressure line on the engine side of the panel.

Removal

1. Turn the ignition switch to the off position and exhaust the air from the brake system.
2. Disconnect the wire at the buzzer switch.
3. Disconnect the air line to the dash gauge and the line to the windshield wiper control. On some full air systems, also disconnect the lines to the tractor protection valve, to the manual emergency valve, and to the hand control valve (Fig. 34).
4. Unscrew the pressure indicator fitting at the engine side of the dash panel, and remove the assembly from the passenger side.

Installation

1. Mount the replacement unit to the passenger side of the dash panel and secure it to the panel by installing the pressure indicator fitting at the engine side.
2. Connect the wire to the buzzer switch, and connect the dash gauge and windshield wiper control lines. On some full air systems, connect the other lines as shown in Fig. 34.

AUTOMATIC MOISTURE EJECTOR VALVE

Removal

1. Block and hold the vehicle by other means than air brakes.
2. Drain the air system.
3. Remove the automatic moisture ejector valve from the reservoir drain port.

Installation

1. Install the moisture ejector valve in the reservoir drain port.
2. Build up air pressure in the reservoir before attempting to move the vehicle.

FOOT CONTROL VALVE

The brake valve has two tiers of four ports each (Fig. 25). The lower tier or ports connect to the reservoir pressure lines; the upper tier connects to the lines carrying brake service pressure. Of the four lower ports, one receives reservoir pressure; one sends reservoir pressure to the governor; and the other two (depending upon the model) either send reservoir pressure to some other part of the system, or they are plugged. On tractors, for example, the trailer emergency line connects to one of these ports in order to carry tractor reservoir pressure to the trailer reservoir.

One of the four upper ports sends valve delivery pressure to the stop light switch. Any or all of the three remaining ports (depending upon the model) can be used to deliver service pressure to the brake chambers or to the trailer. Any unused ports are plugged.

Removal

1. Open the reservoir drain cock(s) to exhaust the system.
2. Disconnect all but one line from the valve ports. Loosen, but do not disconnect, the remaining line. This line will prevent the valve from falling when the attaching bolts are removed.
3. Remvove the cotter key and pivot pin that connect the brake treadle to the control valve mounting plate.
4. Remove the three control valve attaching bolts (Fig. 35).
5. Disconnect the remaining air line from the control valve and remove the control valve.

Installation

1. If a replacement valve is being installed, transfer all brass fittings and the stop light switch to the replacement. Apply sealer to the threads before installation.
2. Remove the actuating button and the rubber seal from the control valve mounting plate to facilitate the positioning of the new valve (Fig. 35).
3. Position the new valve to the lower dash panel and mounting plate, then install three attaching bolts.
4. Install the actuating button in the mounting plate bore, then install the rubber seal to the button and mounting seal.
5. Assemble the brake treadle to the control valve mounting plate with the pivot pin and cotter key.
6. Connect the stop light wires (two nuts and flat washers), and connect the battery cable.
7. Connect the brake service line(s) to the upper ports in the valve.
8. Connect the compressor governor line and the reservoir pressure line(s) to the lower ports in the valve.
9. Start the engine to build up pressure. Check for leaks.

STOP LIGHT SWITCH

If the stop light does not operate, connect a jumper wire across the two switch terminals If the light now lights, replace the switch. If the light still does not light, repair or replace the two switch lead wires as necessary.

Removal

1. Disconnect the wires from the two terminals.

2. Turn the assembly out of the outlet port of the control valve.

Installation

Screw the new switch into the port, and connect the wires to the switch terminals.

QUICK RELEASE VALVE AND RELAY VALVE

The quick release valve is mounted as shown in Fig. 4. The relay valve is used on tandem models and is mounted as shown in Fig. 14. the following procedure applies to both valves with one exception. Before removing the relay valve, the system must be exhausted of air pressure. This is unnecessary when removing the quick release valve.

Removal

1. Disconnect the air lines at the valve.
2. Remove the mounting bolts and remove the valve.

Installation

1. Mount the valve in place and install and tighten the attaching bolts and nuts.
2. Inspect the exhaust port to be sure that it is not plugged.
3. Connect the air lines as shown in Fig. 4.

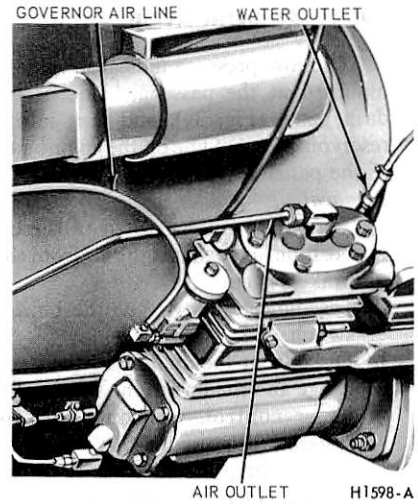

FIG. 27 Air Compressor Air Lines—Ford Diesel

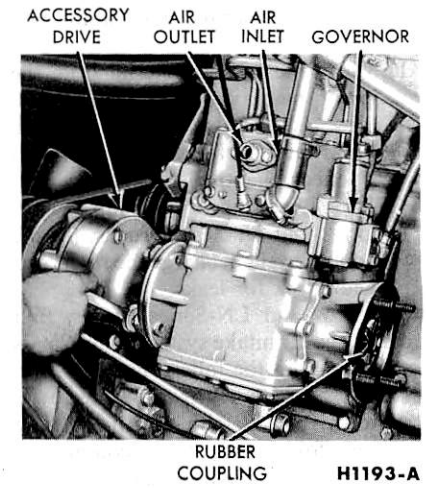

FIG. 29 Removing or Installing Air Compressor—Cummins

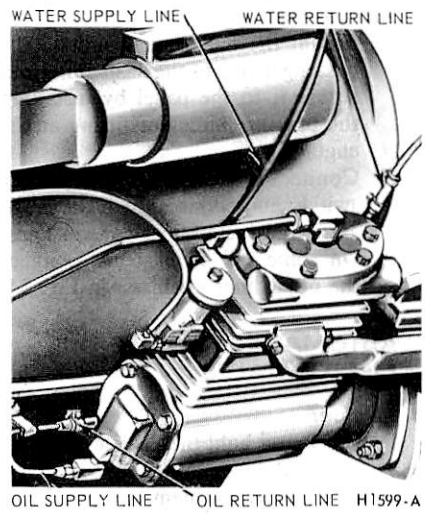

FIG. 28 Air Compressor Oil and Coolant Lines—Ford Diesel

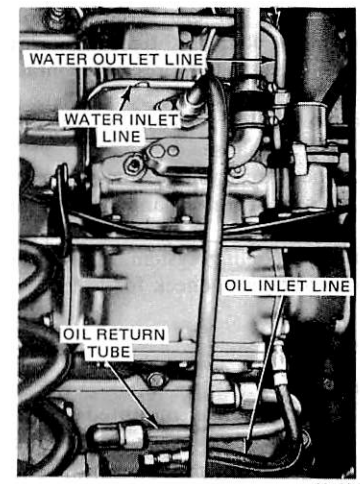

FIG. 30 Air Compressor and Fuel Pump Installed

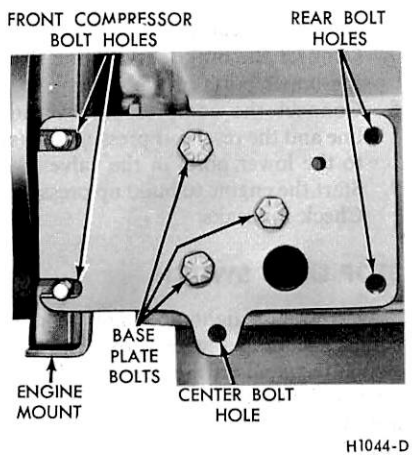

FIG. 26 Base Plate—Side-Mounted Compressor

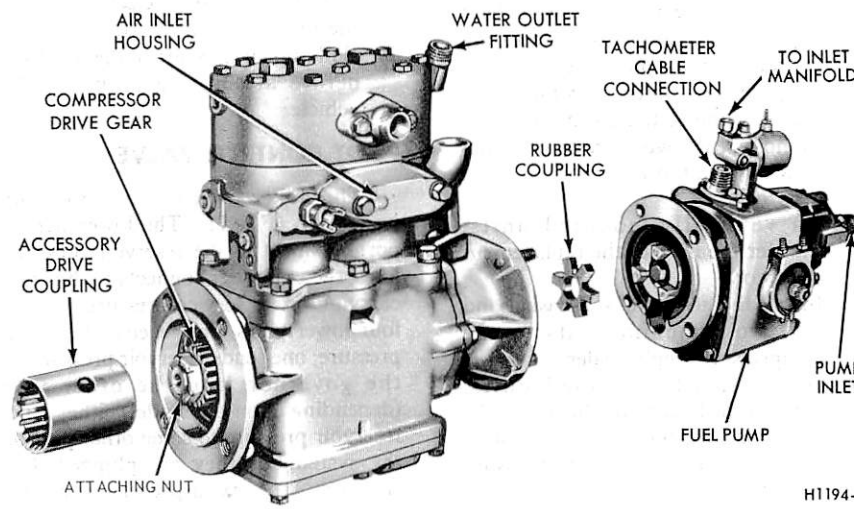

FIG. 31 Air Compressor and Fuel Pump Removed

OVERHAUL

Disassembly and overhaul of the automatic moisture ejector valve is the only major repair operation applicable to this section. If the compressor, reservoirs, governor, low pressure indicator and/or dash gauge do not operate properly, the component must be replaced.

AUTOMATIC MOISTURE EJECTOR VALVE

The automatic moisture ejector valve used in place of the reservoir drain cock on some models is to be disassembled and cleaned every fifty thousand miles or six months. The ejector valve must be removed from the air reservoir for cleaning.

Disassembly

Refer to Figure 3.

1. Remove the cap screws and lockwashers.
2. Remove the cover and sealing ring.
3. Remove the valve guide.
4. Remove the inlet and exhaust valve.
5. Remove the adapter and filter assembly.
6. Remove the filter retainer.
7. Remove the filter.
8. Wash metal parts in a good cleaning solvent. Rubber parts should be wiped clean.
9. Inspect all parts for wear or deterioration.
10. Clean and inspect filter and replace if clogged. **It is important that filter be in good condition. Do not put valve back into service without a clean filter.**
11. **Replace all parts not considered serviceable during these inspections.**

Assembly

1. Before assembling the valve, apply a light film of oil on inlet valve seat. **Do not apply oil to the inlet and exhaust valve.**
2. Place the sealing ring in groove of cover.
3. Place the valve guide over the inlet and exhaust valve.
4. Place the valve guide and inlet and exhaust assembly into the cover (wire will project through the exhaust port).
5. Place the body on the cover and install the cap screws and lockwashers.
6. Install the filter on the adapter and screw in the filter retainer.
7. Install the adapter and filter assembly in the body and tighten.

SPECIFICATIONS

S-CAM BRAKE ADJUSTMENT TABLE

Brake Chamber Type	Maximum Stroke at Which Brake Should Be Adjusted ①	Maximum Stroke After Adjustment ①
Front – Type no.9	1 3/8 inch	1.00 Inch
no.12	1 3/8 Inch	1.00 Inch
no.16	1 3/8 Inch	1.00 Inch
Rear – Type no.24	1 3/4 Inch	1 1/4 Inch
no.30	2.00 Inch	1 1/4 Inch

① Push rod stroke is measured from chamber or chamber mounting bracket to Push rod clevis.

AIR SUPPLY SYSTEM

Air Brake System Pressure Settings	
Safety Valve Setting (Air Pressure)	150 PSI
Warning Buzzer Operating Pressure	60 PSI or Less
Cut-Out Pressure (Governor)	118–126 PSI
Cut-In Pressure (Governor)	98–104 PSI

Torque Limits (Ft-Lbs)	
Air Brake Compressor Pulley Nut②	3/4, 40–45

② Advance nut to next cotter pin slot, if necessary, to Install Cotter Pin.

AIR BRAKE LINE TYPES

SAE J844 Type 3A – For 1/4 Inch

SAE J844 Type 3B – For 3/8, 1/2, 3/4 Inch

NYLON HOSE TUBE NUT TORQUE

Size	Torque	Size	Torque
7/16–24	85–115 In.Lbs.	11/16–20	12–17 Ft-Lbs.
17/32–24	12–17 Ft-Lbs.	1–18	20–29 Ft-Lbs.

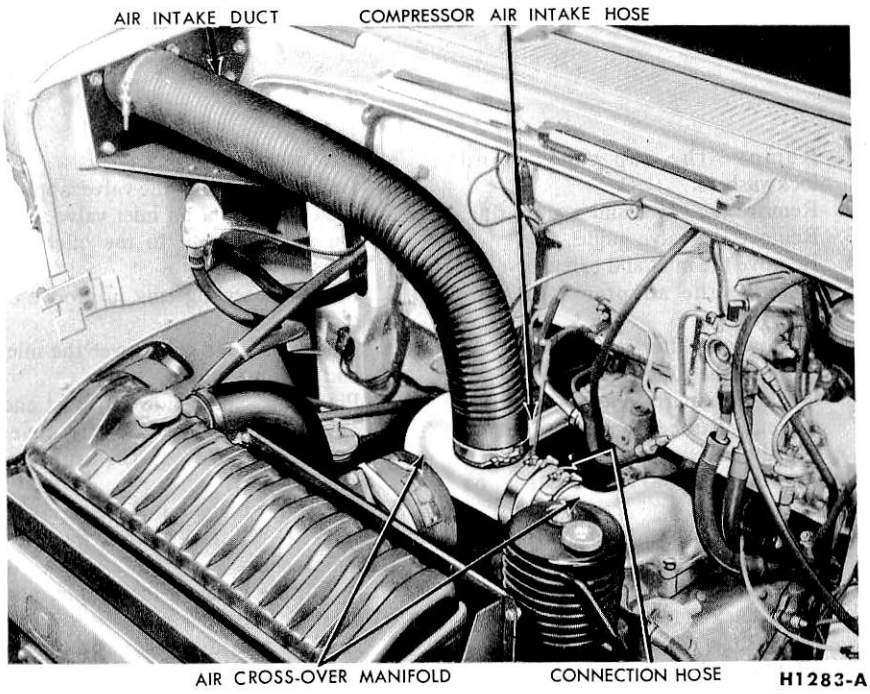

FIG. 32 Air Intake System—LN-Series

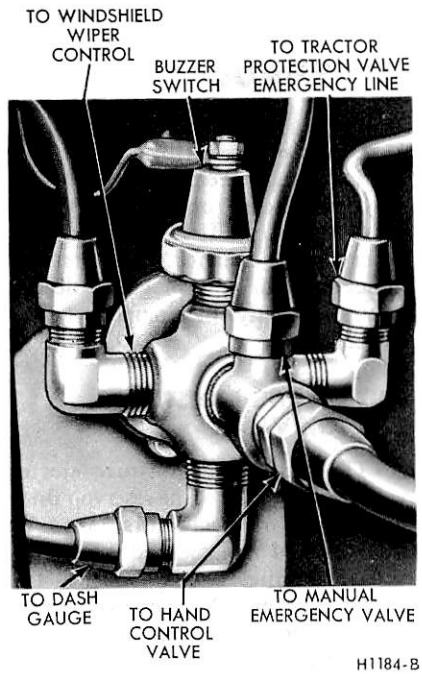

FIG. 34 Pressure Indicator Valve

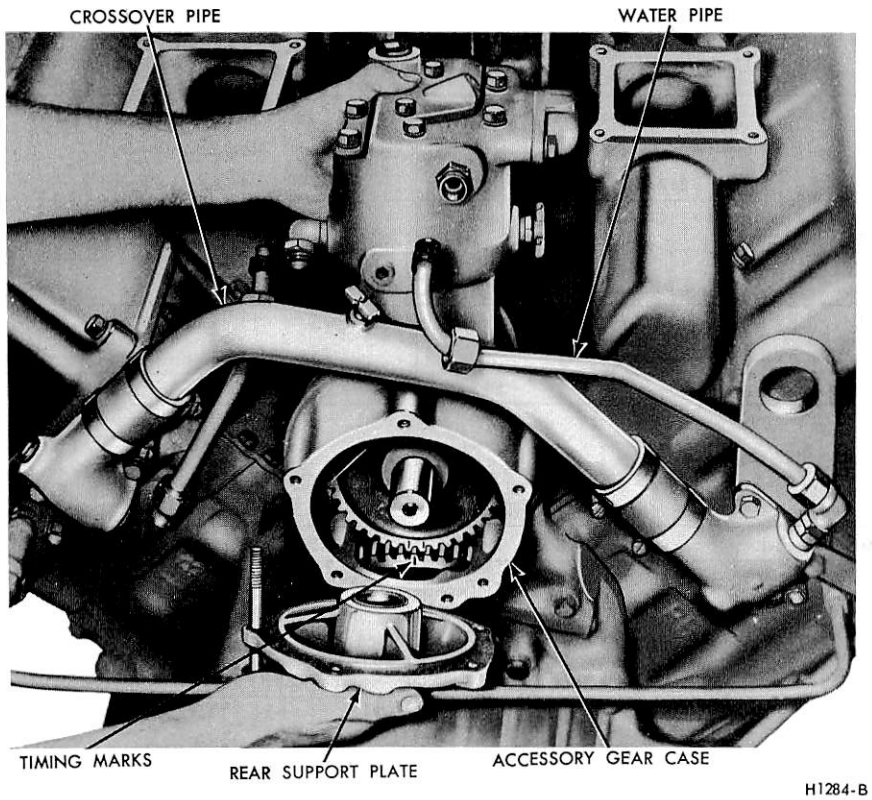

FIG. 33 Removing or Installing V-6 Air Compressor—L-Series

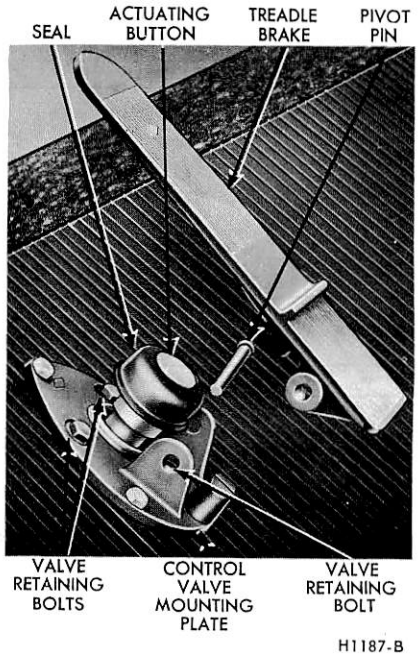

FIG. 35 Brake Treadle and Mounting Plate—Typical Integral Type

PART 12-43 Air Brakes—Single Wedge—Rockwell

Applies To 600 Thru 9000 Series Trucks

COMPONENT INDEX	Page	COMPONENT INDEX	Page
ACTUATING SYSTEM		BRAKE SHOE	
Disassembly and Assembly	43-03	Adjustment	43-02
		Removal and Installation	43-02
BRAKE SERVICE AIR CHAMBER		DESCRIPTION	43-01
Disassembly and Assembly	43-03		
Removal and Installation	43-02		

DESCRIPTION

Compressed air, admitted to the brake chamber by the foot control valve, enters the chamber behind a diaphragm which forces the push plate and push rod outward.

On the single wedge brake, one air chamber and actuator assembly, at one end of the shoes, forces the shoes against the drum (Figs. 1 and 2).

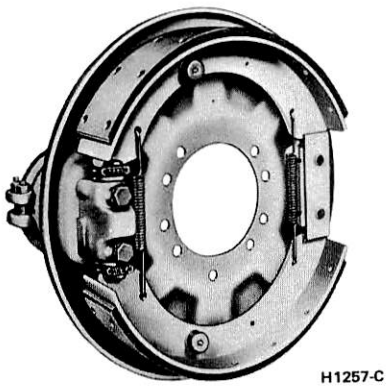

FIG. 1 Rockwell Single Wedge Brake

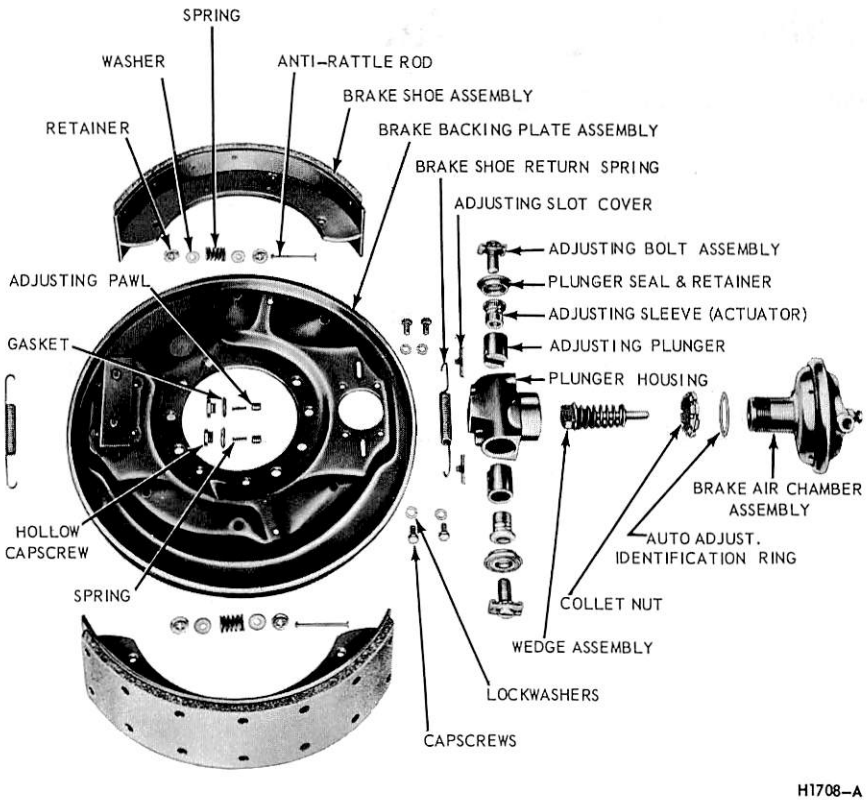

FIG. 2 Rockwell Single Wedge Brake—Disassembled

ADJUSTMENTS

WEDGE BRAKE

The wedge type air brakes are self adjusting. Instructions for servicing the automatic adapters are contained in Disassembly and Assembly.

A preliminary adjustment can be made by rotating the wheels forward and applying air to the brake chambers 25 or 30 times.

REMOVAL AND INSTALLATION

BRAKE SHOE

Removal

1. Remove the wheel, hub, and drum assembly.
2. Remove the brake shoe retracting springs (Figs. 1 and 2).
3. Remove the shoe hold-down springs (Fig. 1).
4. Remove the shoes.

Installation

1. Clean, inspect and lubricate the brake actuator and adjuster assemblies. Refer to Disassembly and Assembly.
2. Apply a film of high temperature grease at all shoe contact points.
3. Mount the ends of the brake shoes in the grooves in the actuating plungers. Install the shoe hold-down springs (Fig. 1).
4. Install **new** shoe retracting springs.
5. Install the wheel, hub, and drum assembly.

SERVICE AIR CHAMBER—ROCKWELL WEDGE TYPE BRAKE

Removal

Exhaust all air pressure from the system before attempting repair work.

1. Disconnect the air inlet line.
2. Using a drift and a light hammer, loosen the spanner nut.
3. Unscrew the service chamber assembly from the wedge housing.

Installation

1. Check position of the wedge in plunger housing to make certain wedge assembly is properly seated. Be sure to replace automatic adjusting identification ring on service chamber tube. Thread spanner nut onto power unit tube.
2. Screw the service chamber into the plunger housing until it bottoms (spanner nut loose).
3. Align connection ports with brake lines, if necessary, unscrewing service chamber not more than one full turn.
4. Connect brake lines.
5. Make and hold a full pressure brake application. Drive spanner nut with a drift and hammer until it is tight against the plunger housing. Release the brake pressure.
6. Check for leaks at all connections.

DISASSEMBLY AND ASSEMBLY

BRAKE SERVICE AIR CHAMBER

The following procedures are used to replace the diaphragm and boot with the non-pressure housing on the brake assembly.

Disassembly

1. Cage the power spring if the Fail-Safe unit is used.
2. Remove the air lines and tag the emergency line.
3. Remove the clamp ring nuts, bolt and the Fail-Safe warning tag and bottoming chamber tags if used.
4. Spread the clamp ring. Hold the diaphragm on the non-pressure half and remove the pressure half or Fail-Safe head.
5. Carefully remove the diaphragm while holding the diaphragm plate against the wedge rod. This will prevent the wedge assembly from coming out of engagement with the plungers.
6. Continue to hold the plate and inspect the boot. If the boot is torn or not attached to the housing, strip the old boot free from the housing and carefully remove the plate assembly off of the rod and out of the non-pressure housing tube. The boot and wedge guide will remain on the plate push rod.
7. Remove the wedge guide and old boot from the push rod. Inspect the guide for wear and replace if necessary.

Assembly

1. Install a new boot on the diaphragm plate push rod and press the wedge guide all the way onto the end of the push rod.
2. Clean the non-pressure housing with cement thinner or a similar material in the area where the boot is to be cemented.
3. Apply cement to the housing around the tube end. Position the plate-push rod assembly into the tube. Carefully engage the wedge rod so as to not pull it out of the plungers.
4. While holding the plate against the wedge, press the boot into position for cementing.
5. Install a new diaphragm over the plate and onto the non-pressure housing while pushing the plate against the wedge. Assemble the pressure half and clamp ring in the reverse manner of disassembly.
6. Connect the air lines to the proper chamber and Fail-Safe ports. Make a full-pressure brake application and check for air leaks. Road test for brake performance.

ACTUATING SYSTEM

Disassembly

1. Cage the power spring if Fail-Safe unit is used.
2. Remove the wheel hub and drum assembly, and the brake shoes.
3. Exhaust the air from the system and disconnect the air lines from the air chamber housing.
4. Remove the required brake service chambers from the actuator housings according to the procedure given in Removal and Installation.
5. Remove the guide screws and the gaskets from the plunger housing.
6. Remove the hollow cap screw, gasket, spring, and adjusting pawl (Fig. 3). Use a small magnet to remove the pawl.
7. Pry plunger seals loose and remove the anchor (solid) plungers, adjusting sleeves (actuator) and adjusting bolts.

Assembly

1. Thoroughly inspect and clean all parts, including the housing plunger and seal bores and shoe rest pads. **Do not solvent-clean any rubber parts (plunger seals or gaskets).** Wire brush plunger parts and adjusting bolt threads to remove any caked-on dirt and corrosion. Carefully inspect plunger seals and gaskets for tears, cuts, or deterioration, and replace if necessary. Also check the angled plunger roller faces for pits, grooves, or nicks and replace if necessary.

There is one adjusting plunger and one anchor (solid) plunger per plunger housing. The anchor plungers are marked on the shoe slot end. R for right

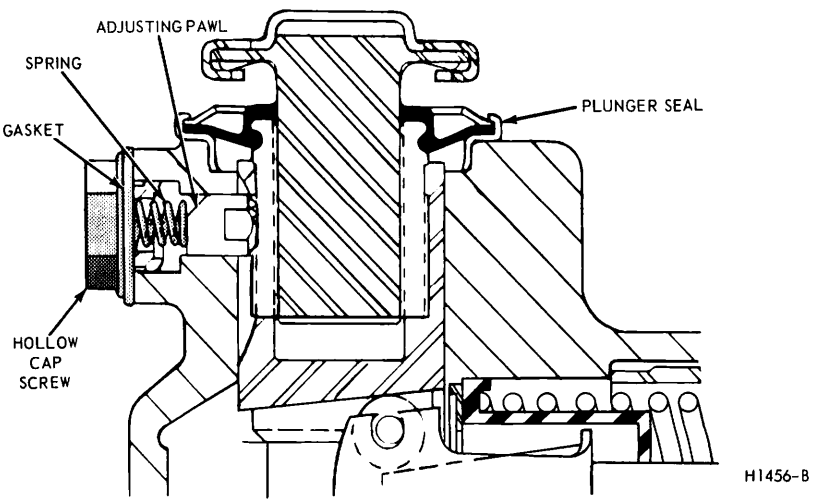

FIG. 3 Rockwell Adjuster—Sectional View

brakes and L for left. Do not mix at reassembly.

2. **Do not assemble the seals into the plunger housing first. This will result in complete lack of sealing of the internal plunger housing components.**
3. Apply a film of high temperature water proof lubricant (Rockwell Standard Part No. A-1779-W-283 or equivalent) to the inside surfaces of the seals.
4. On the anchor (solid) plungers, inspect the tapered nose for burrs. Mask the brake shoe web slot in the plunger nose with masking tape to protect the seal from the sharp edges of the slot (Fig. 4).
5. Carefully push the double lip seal onto the plunger, stretching the outer seal lip over the plunger nose end, until the inner seal lip is completely in the second plunger groove and the outer seal lip is in the first plunger groove (Fig. 5). Remove the masking tape.
6. Coat all plunger bores with high temperature waterproof lubricant (Rockwell-Standard Part No. A-1779-W-283 or equivalent).
7. **Anchor (solid) plungers. Make sure anchor plungers marked L are installed in left brake assemblies. Coat the entire plunger, and the packing cavity behind the seal with high temperature waterproof lubricant (Rockwell-Standard Part No. A-1779-W-283 or equivalent), and insert the plunger and seal into the housing with plunger key-way slot aligned with guide screw hole. Make certain the plunger goes all the way into the plunger bore and seats on the bosses at the bottom of the bore.**
8. Seat the plunger seal in the plunger housing using an appropriate seal driver or 1 3/4 inch socket (Fig. 6).
9. **Automatic Adjuster Plunger.** Lubricate the inside and outside surfaces of both the adjusting plunger and the adjusting actuator. Place the plunger into the plunger housing, aligning the plunger key-way slot with the guide hole.
10. Assemble the adjusting pawl into the plunger housing. **The adjusting pawl has flats on one end and a chamfered edge on the other end.** Coat the pawl with high temperature waterproof lubricant (Rockwell-Standard Part No. A-1779-W-283 or equivalent) and insert it into the guide hole, teeth first, with the chamfer toward the brake shoe. This aligns the pawl and actuator teeth and the flats with the key-way slot.
11. Insert the actuator into the plunger (Fig. 7) working the sleeve so that the pawl and sleeve teeth mesh. Push the actuator into the plunger until it bottoms.
12. Install the hollow cap screw with the spring and gasket.
13. Using the appropriate driver, seat the seal in the plunger housing (Fig. 6).
14. Check for proper meshing of the pawl and actuator teeth at this point, by lubricating the adjusting bolt threads and then threading the bolt into the adjusting sleeve. Thread the adjuster bolt into the actuator until it bottoms. A clicking sound and a ratcheting feel will indicate meshing of the teeth. Turn the bolt out three turns and if there is no clicking sound or ratcheting feel, mesh is correct. **Be careful, when inserting the bolt into the actuator, not to cut or damage the plunger seal.**
15. Tighten the hollow cap screw (Fig. 3) to 15-20 ft-lb.
16. Before installing the brake shoes, push the adjuster bolt and plunger into brake until seated, then turn the adjusting bolt into the actuator, just short of contacting the seal. **Do not bottom the adjusting bolt against the seal.**
17. Install the brake shoes.
18. Install the brake chambers in the housings per the instructions in Brake Chamber Installation.
19. Place the brake drum and hub over the shoes halfway. Adjust each show out an equal amount until there is 1/16 inch clearance at each shoe.
20. Install the wheels, hubs and drums.

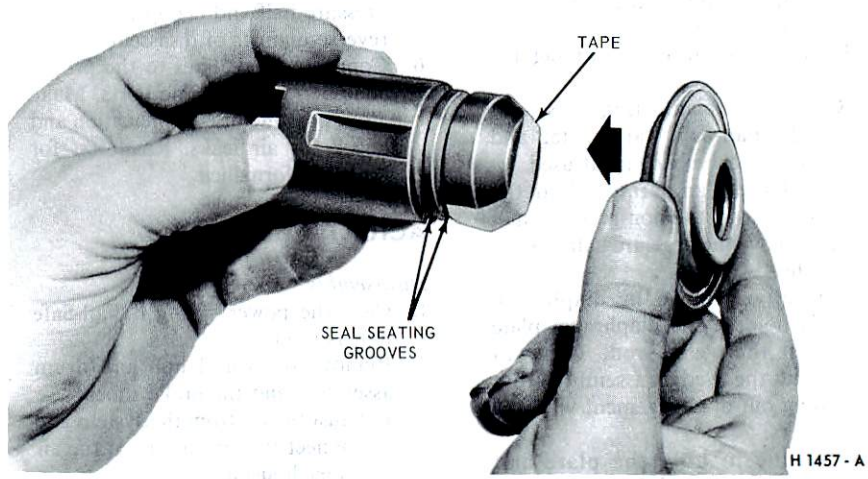

FIG. 4 Installing New Seal

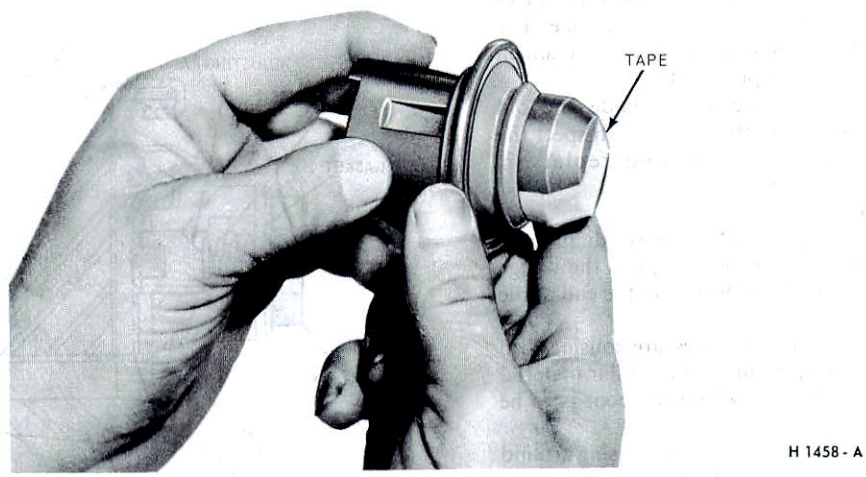

FIG. 5 Seal Correctly Installed



FIG. 6 Installing Plunger Seal

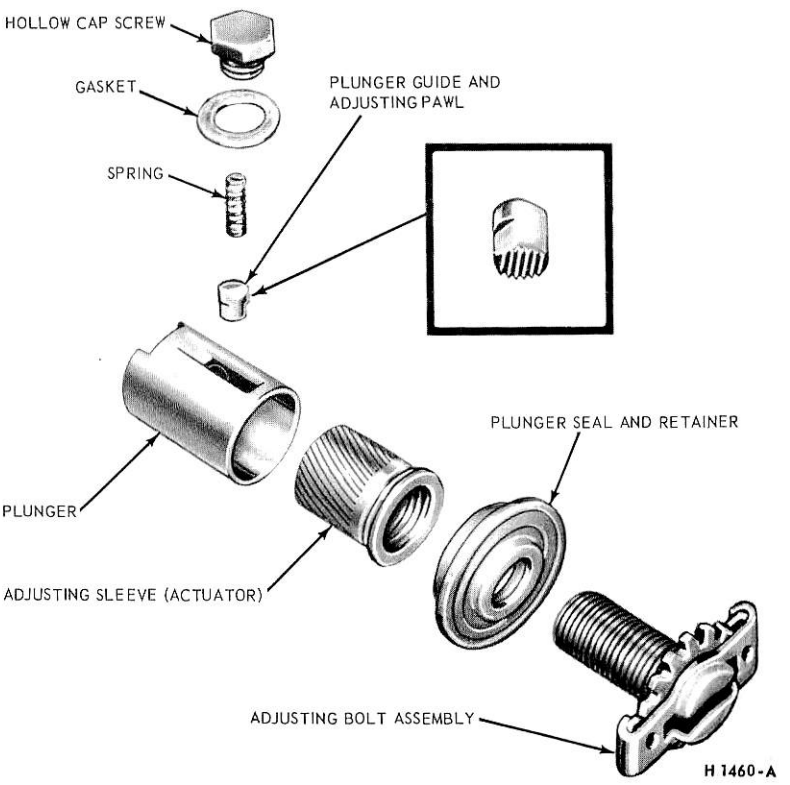

FIG. 7 Rockwell Adjuster—Exploded View

PART 12-44 Air Brakes—Single Wedge—Bendix

Applies To 600 Thru 9000 Series Trucks

COMPONENT INDEX	Page	COMPONENT INDEX	Page
ACTUATING SYSTEM		BRAKE SHOE	
Disassembly and Assembly	44-02	Adjustment	44-01
		Removal and Installation	44-01
BRAKE SERVICE AIR CHAMBER		DESCRIPTION	44-01
Disassembly and Assembly	44-02		
Removal and Installation	44-01		

DESCRIPTION

Bendix wedge-operated air brakes are installed on certain models (Fig. 1). Shortstop air parking and safety brakes are available in conjunction with the system. Service instructions for the shortstop system are contained in the Parking Brake section of this manual.

Except where the Shortstop system is installed, two air service chambers are used on each rear brake assembly, and one service chamber on each front brake assembly.

ADJUSTMENTS

Wedge type brakes are self adjusting. Instructions for servicing the automatic adapters are contained in Disassembly and Assembly.

A preliminary adjustment can be made by rotating the wheels forward and applying air to the brake chambers 25 or 30 times.

REMOVAL AND INSTALLATION

BRAKE SHOE

Removal

All brake shoes, front and rear, are constructed with an adjusting end and an anchor end. When installing the shoes, make certain that the end with the thinner web is mounted correctly in the adjusting screw link. To remove the brake shoes, follow this procedure:

1. Remove the wheel and tire assembly and the hub and drum.
2. Unhook the two shoe-to-shoe springs (Fig. 1).
3. Remove the brake shoe hold-down springs and remove the shoes.

Installation

1. Coat the shoe slots in the shoe links with Lubriplate.
2. Clean the pads on the backing plate and coat the rubbing surfaces with the specified lubricant (Lubriplate).
3. Position the shoes on the backing plate with the thinner end of the shoe web in the adjusting screw link and the thicker end under the anchor block. Install the shoe-to-shoe springs (Fig. 1).
4. Clean the drum, as required, and install drum and hub, wheel and tire.
5. Apply the brakes several times before moving the truck, to assure proper seating and adjustment of the brake shoes.

SERVICE AIR CHAMBER

Removal

Exhaust all air pressure from the system before attempting repair work.

1. Disconnect the air inlet line.
2. Using a drift and a light hammer, loosen the lock nut.
3. Unscrew the service chamber assembly from the wedge housing.

Installation

1. Insert the service chamber assembly

into the wedge housing, making sure that the wedge shaft mates with the piston or diaphragm shaft seat.
2. Screw the service chamber assembly into the wedge housing until it bottoms, then back out less than one turn to align the unit with the air inlet line.
3. Screw the lock nut up against the lockwasher or casting, if a lockwasher is not used. Then, use a drift and hammer to tighten the lock nut an additional 1 1/2 teeth (3/16 turn).
4. Connect the air inlet line and store system air pressure. Check for operation.

DISASSEMBLY AND ASSEMBLY

ROTO CHAMBER—BRAKE SERVICE AIR CHAMBER—BENDIX WEDGE BRAKES

Disassembly
1. Remove the four hex head screws holding the cover to the body (Fig. 2).
2. Remove the cover, spring, boot and piston.
3. Remove the nut from the stud attaching the diaphragm clamp to the cover.
4. Work the diaphragm and diaphragm clamp out of the cover.
5. Straighten the rolled diaphragm (Fig. 2).
6. Clean all the metal parts in cleaning solvent. Inspect the body and cover for cracks or damage. Be sure the plunger is intact. Inspect the release spring and replace if cracked or damaged. Replace the boot at each overhaul.
7. Inspect the diaphragm for cracks. (Replace every 50,000 miles or 12 months, regardless of appearance).

Assembly
1. Coat the inside of the cover with a common oil soap.
2. Coat the diaphragm with a common oil soap and press it into the cup shaped diaphragm clamp. Roll the protruding edges of the diaphragm over the lip of the diaphragm clamp.
3. Insert the diaphragm and clamp assembly into the bore of the cover, working it in so that the diaphragm does not come off the lip of the diaphragm clamp.
4. Install the nut and washer on the diaphragm clamp stud and tighten securely.
5. Position the piston, boot and return spring. Then, install the chamber cover to the body with the four hex head attaching screws. Tighten securely.

MGM—BRAKE SERVICE AIR CHAMBER

Disassembly

Refer to Figure 3.
1. Remove the clamp ring fastening the cover to the body. Remove the cover and diaphragm.
2. If the boot is to be replaced, remove the piston and boot from the body.

Assembly
1. Clean the inside of the chamber. If a new boot is required it should be cemented to the chamber tube and allowed to dry at least five minutes or until tacky (3M No. EC-2141, or EC-1357 adhesive recommended).
2. Install the piston, making sure the wedge shaft fits into the piston seat. Also insure that the boot fits into the groove on the piston shaft.
3. Cement the new diaphragm to the piston and allow it to dry for at least five minutes or until tacky (3M No. EC-2141 or EC-1357 adhesive recommended).
4. Position the cover and install the clamp ring making sure the diaphragm is between the chamber body and the cover plate.
5. Tighten the clamp ring bolt and nut. Tap the circumference of the ring with a soft hammer to seat the ring and retighten the bolt and nut to 30-35 ft-lbs torque.
6. Soap test the clamp ring area for air leaks when air pressure is applied to the chamber.

ACTUATING SYSTEM

Disassembly
1. Remove the wheel hub and drum assembly, and the brake shoes.
2. Exhaust the air from the system and disconnect the air lines from the air chamber housing.
3. Remove the brake service chamber from the actuator housing according to the procedure given in Removal and Installation.
4. Pull out the wedge and return spring assembly. Use care to keep from damaging surfaces of wedges or rollers (Fig. 4).
5. Push in on the spring seat cup to compress the return spring (Fig. 4) and remove the retaining ring from the groove in the wedge shaft.
6. Disengage the dust boots from the actuator casting and then pull the plunger assemblies from the casting bore.
7. Remove the adjusting screw and nut assemblies from the adjuster plungers (Figs. 4, 5 and 6).
8. Disassemble screw, nut and dust boot and remove overload spring, link and detent spring.
9. Slide the automatic adjuster levers off the pins and remove the levers and springs.

Cleaning and Inspection
1. Clean the metal parts in a non-oily solvent. Replace the rubber parts whenever the brake is disassembled. Replace damaged or worn metal parts. Do not use gasoline or hot water solutions on metal parts.
2. Inspect the following parts as outlined and replace worn or damaged pieces:
   a. Check rod and wedge surfaces for scoring.
   b. Check outside surface of the plunger for scoring.
   c. Check the adjusting screws and nuts for sheared threads. Check adjuster ring teeth for wear.
   d. Check shoe web slot of the brake shoe links for roughness and cracks.
   e. Check the rollers for score marks and cracks.
   f. Check the spring clip for fatigue cracks.
   g. Check the adjuster levers for fatigue cracks and distortion.

Check for a broken adjuster lever spring.

h. Inspect the overload spring for fatigue cracks. Replace if test load is less than 13 lbs when spring ends are compressed 0.12 inch apart.

i. Inspect the adjuster plungers for scores and refinish with crocus cloth or hone.

j. Inspect the machined bores of the actuator casting for roughness. Use emery cloth to remove any rough areas which interfere with plunger movement. Check automatic adjuster pins for corrosion or distortion. Check the shoe pads on the backing plate for roughness on the rubbing surfaces.

Assembly

1. Coat all threads and bearing surfaces of links with Lubriplate. Use same lubricant on plunger and also dip spring and lever (Figs. 6 and 7) in light oil.
2. Assemble the adjusting screw nut through the adjuster tooth ring and align the slots as shown in Fig. 5.
3. Engage the overload spring securely. The ends of the spring must be in the hooks A and B (Fig. 5) of the nut and ring.
4. Check to be sure the parts are correctly installed by turning the ring clockwise in relation to the nut. The ring will move clockwise against the overload spring, when properly assembled, but must not be movable counterclockwise.
5. Install the detent spring on the link, aligning flats on each part and then press the link into the adjusting screw. Align the detent between starwheel teeth.
6. Install the dust boot on the adjusting screw from the threaded end. Coat the screw threads with lubricant and install the screw in the adjusting nut. **Turn the screw until it bottoms in the nut and then back out screw one full turn.**
7. Coat the inside diameter of the plunger bore with lubricant and install the screw and nut assemblies in the plunger.
8. Install the hook of lever return spring in the spring hole of the lever. Coat the lever and spring with light oil and install them in the cylinder casting by dropping the spring into its well and slipping the lever onto its pin (Fig. 7).
9. Coat the cylinder bore of the actuator with lubricant and install the plunger assembly in the bore, aligning the guide pin in the plunger with the slot in the casting.
10. Press the metal retainer portion of the dust boot into the cylinder housing until it bottoms against the shoulder of the casting.
11. Assemble the parts shown in Fig. 4 on the wedge shaft.
12. Compress the wedge return spring and install the retainer ring holding the parts in assembly.
13. Lubricate the wedge and rollers and install the wedge assembly into the actuator casting.
14. When installing the brake service chamber, make certain the end of the wedge shaft is seated in the piston assembly of the air chamber. Screw the air chamber into the wedge housing until the chamber bottoms, then back out less than one turn to align the chamber for line connections. Tighten the air chamber. See Service Air chamber Removal and Installation.
15. Assemble the shoes and shoe-to-shoe springs on the backing plate. A preliminary setting of the shoes can be made on the bench, using a 15 inch brake drum. To use a drum, set the wedge brake assembly in the drum and apply shop air several times to the air chamber. Each

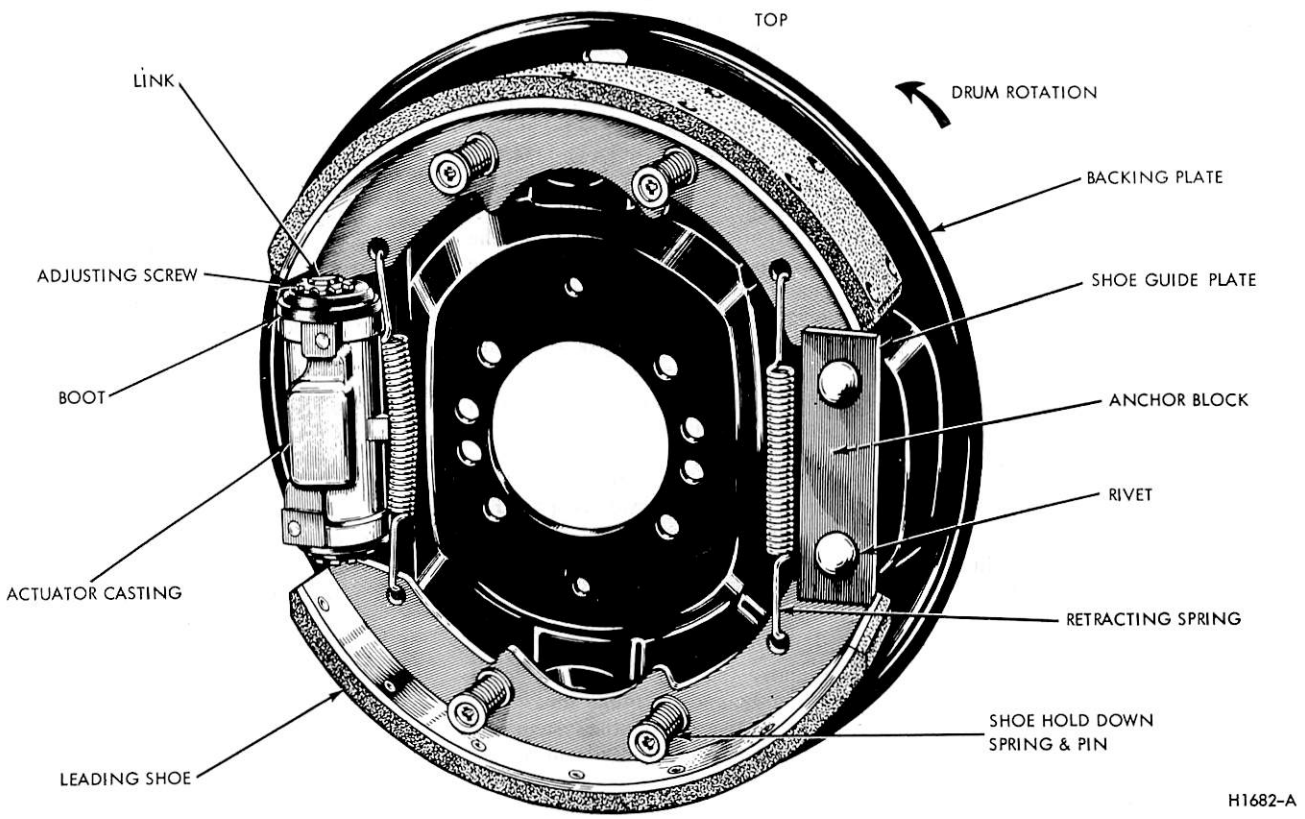

FIG. 1 Front Bendix Wedge Brake

automatic adjuster mechanism will maintain 0.040 inch clearance so assembly can be easily removed from the drum. After mounting the brake assembly to the truck, apply the brakes several times before moving the vehicle to assure proper seating of the brake shoes.

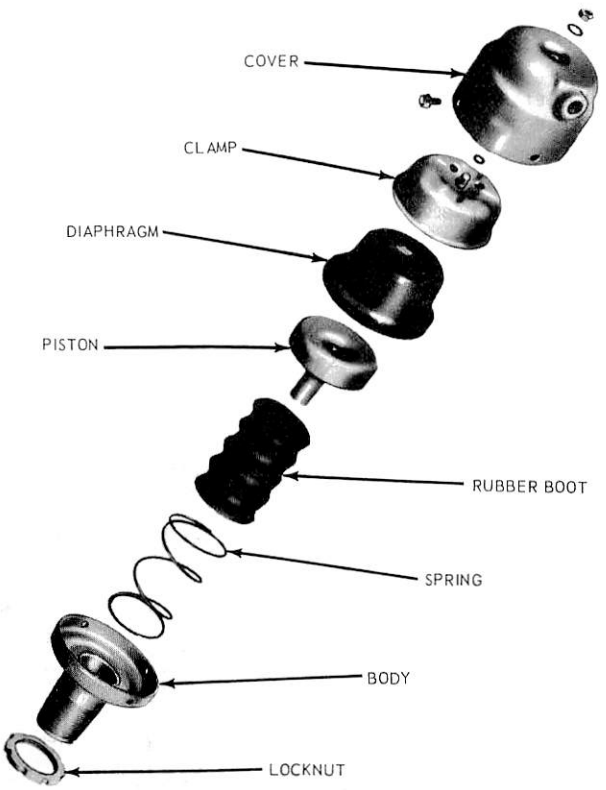

FIG. 2 Roto Chamber—Disassembled

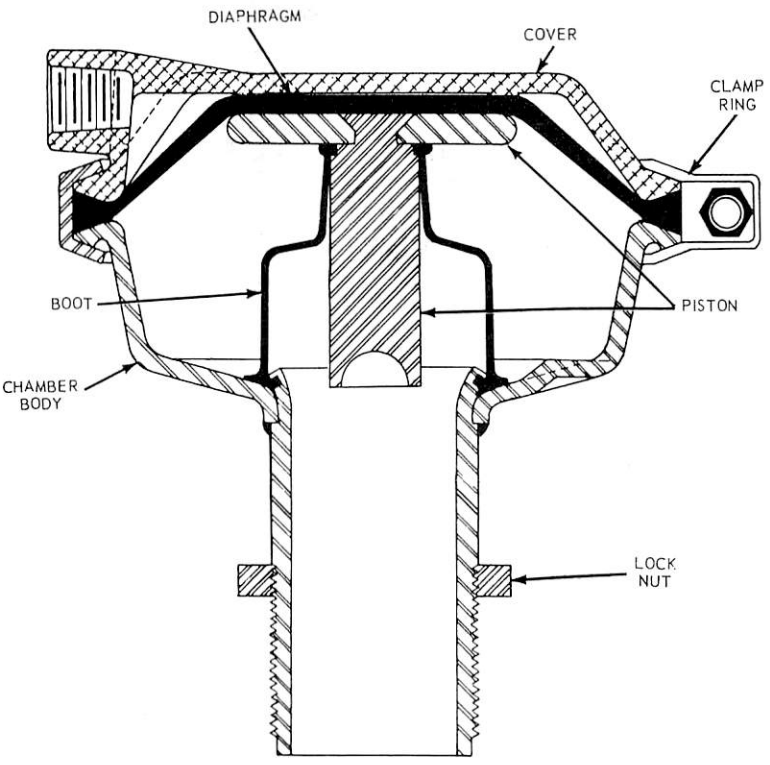

FIG. 3 MGM Service Brake chamber

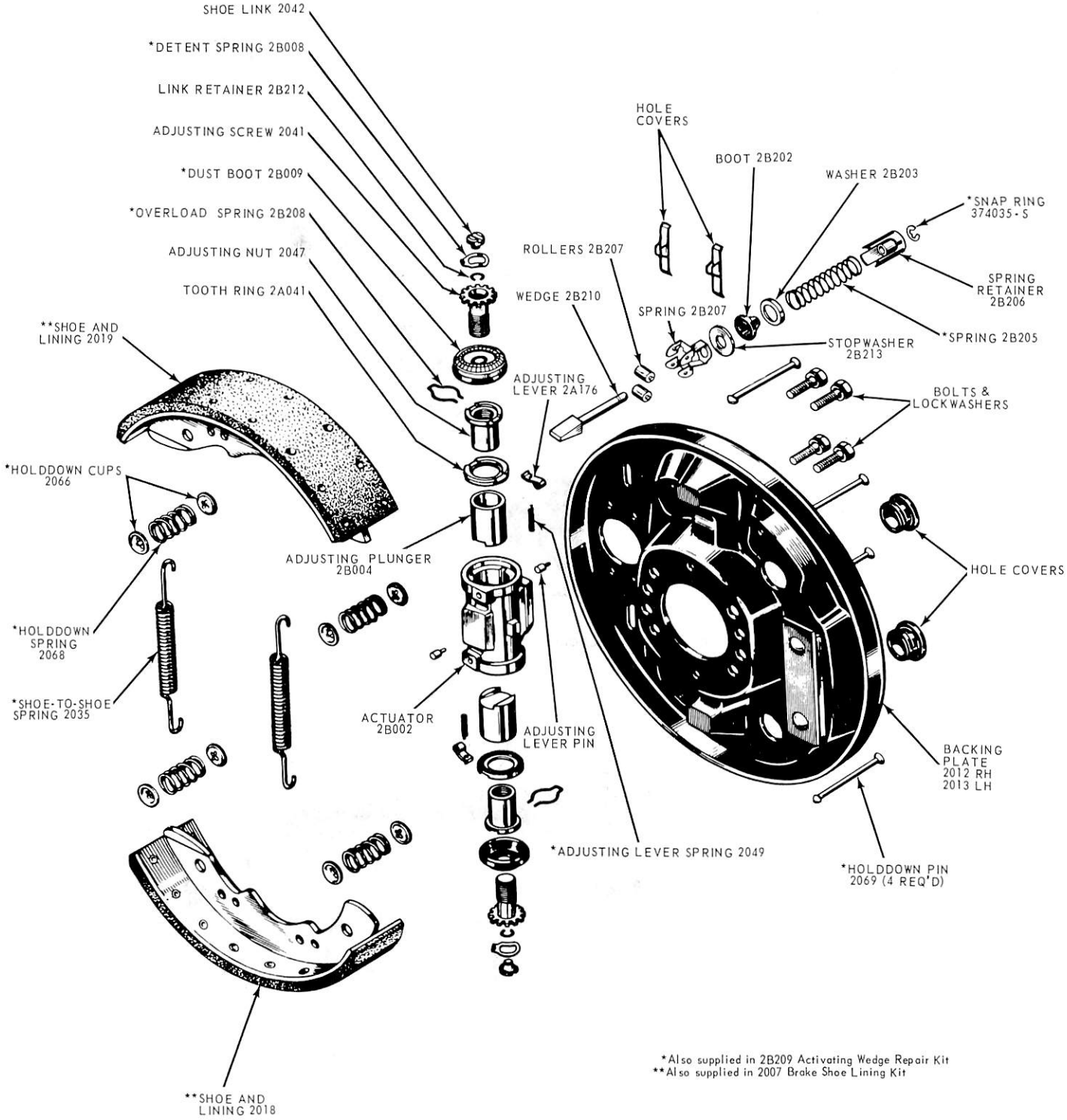

FIG. 4 Bendix Single Wedge Brake—Exploded View

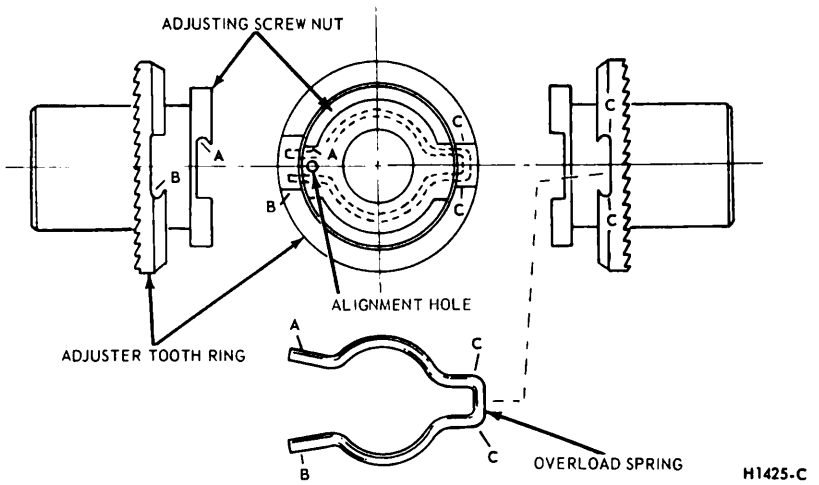

FIG. 5 Automatic Adjuster Details

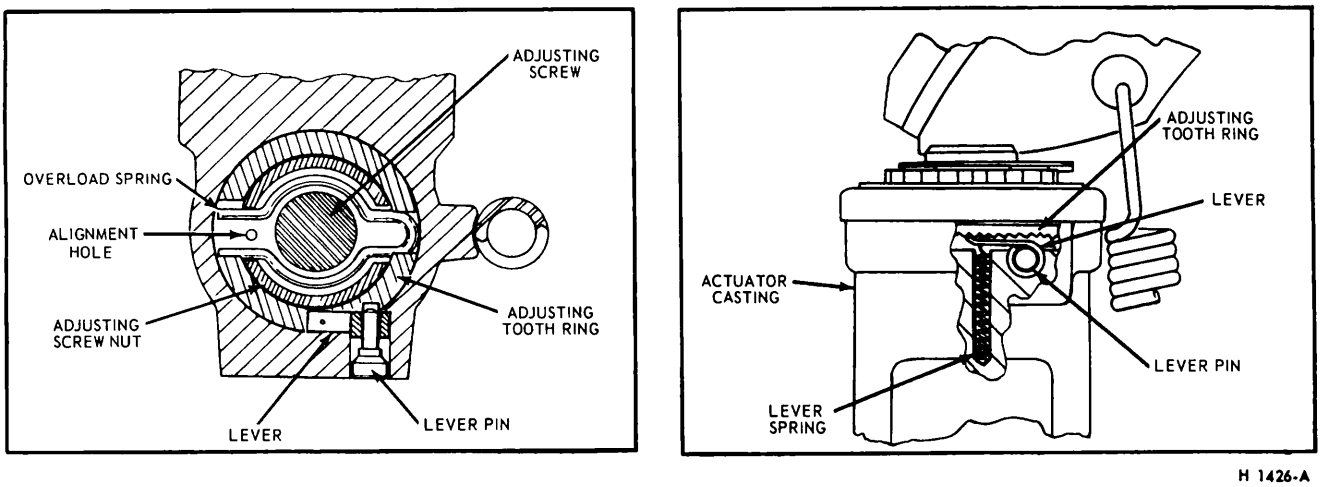

FIG. 6 Automatic Adjuster—Top and Side View

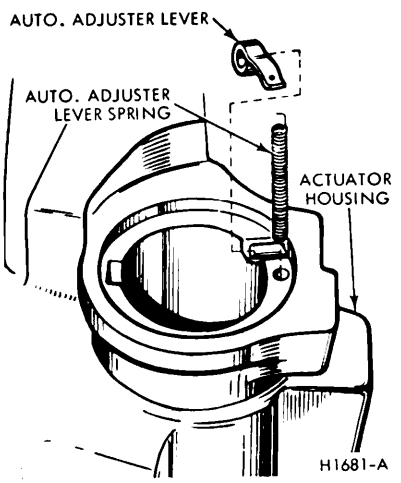

FIG. 7 Assembling Automatic Adjuster Lever and Spring

PART 12-46 Air Brakes—Double Wedge-Bendix

Applies To 600 Thru 9000 Series Trucks

COMPONENT INDEX	Page	COMPONENT INDEX	Page
ACTUATING SYSTEM		DESCRIPTION	46-01
Disassembly and Assembly	46-02	MGM BRAKE SERVICE AIR CHAMBER	
BRAKE SERVICE AIR CHAMBER		Disassembly and Assembly	46-02
Removal and Installation	46-01	ROTO CHAMBER BRAKE SERVICE	
BRAKE SHOE		AIR CHAMBER	
Adjustment	46-01	Disassembly and Assembly	46-02
Removal and Installation	46-01		

DESCRIPTION

Bendix wedge-operated air brakes are installed on certain models (Fig. 1). Shortstop air parking and safety brakes are available in conjunction with the system. Service instructions for the Shortstop system are contained in the Parking Brake section of this manual.

Except where the Shortstop system is installed, two air service chambers are used on each rear brake assembly, and one service chamber on each front brake assembly.

ADJUSTMENTS

Wedge type brakes are self adjusting. Instructions for servicing the automatic adapters are contained in Disassembly and Assembly.

A preliminary adjustment can be made by rotating the wheels forward and applying air to the brake chambers 25 or 30 times.

REMOVAL AND INSTALLATION

BRAKE SHOE

Removal

All brake shoes, front and rear, are constructed with an adjusting end and an anchor end. When installing the shoes, make certain that the end marked ADJ. END is mounted correctly in the adjusting plunger link. To remove the brake shoes, follow this procedure:

1. Remove the wheel and tire assembly and the hub and drum.
2. Unhook the two shoe-to-shoe springs (Fig. 1).
3. Remove the shoes.

Installation

1. Coat the shoe slots in the anchoring plunger inserts with Lubriplate.
2. Clean the shoe guide bosses and the steady rests on the torque spider and coat the rubbing surfaces with the specified lubricant (Lubriplate).
3. Position the shoes in the steady rests and install the shoe-to-shoe springs (Fig. 1). Be sure the end of the shoe marked ADJ. END is engaged in the link at the adjuster plunger (Fig. 1).
4. Clean the drum, as required, and install drum and hub, wheel and tire.
5. Apply the brakes several times before moving the truck, to assure proper seating and adjustment of the brake shoes.

SERVICE AIR CHAMBER

Removal

Exhaust all air pressure from the system before attempting repair work.

1. Disconnect the air inlet line.
2. Using a drift and a light hammer, loosen the lock nut.
3. Unscrew the service chamber assembly from the wedge housing.

Installation

1. Insert the service chamber assembly into the wedge housing, making sure that the wedge shaft mates with the piston or diaphragm shaft seat.
2. Screw the service chamber assembly into the wedge housing until it bottoms, then back out less than one turn to align the unit with the air inlet line.
3. Screw the lock nut up against the casting. Then, use a drift and hammer to tighten the lock nut an additional 1 1/2 teeth (3/16 turn).
4. Connect the air inlet line and store system air pressure. Check for operation.

DISASSEMBLY AND ASSEMBLY

ROTO CHAMBER—BRAKE SERVICE AIR CHAMBER

Disassembly

1. Remove the four hex head screws holding the cover to the body (Fig. 2).
2. Remove the cover, spring, boot and piston.
3. Remove the nut from the stud attaching the diaphragm clamp to the cover.
4. Work the diaphragm and diaphragm clamp out of the cover.
5. Straighten the rolled diaphragm (Fig. 2).
6. Clean all the metal parts in cleaning solvent. Inspect the body and cover for cracks or damage. Be sure the plunger is intact. Inspect the release spring and replace if cracked or damaged. Replace the boot at each overhaul.
7. Inspect the diaphragm for cracks. (Replace every 50,000 miles or 12 months, regardless of appearance).

Assembly

1. Coat the inside of the cover with a common oil soap.
2. Coat the diaphragm with a common oil soap and press it into the cup shaped diaphragm clamp. Roll the protruding edges of the diaphragm over the lip of the diaphragm clamp.
3. Insert the diaphragm and clamp assembly into the bore of the cover, working it in so that the diaphragm does not come off the lip of the diaphragm clamp.
4. Install the nut and washer on the diaphragm clamp stud and tighten securely.
5. Position the piston, boot and return spring. Then, install the chamber cover to the body with the four hex head attaching screws. Tighten securely.

MGM—BRAKE SERVICE AIR CHAMBER

Disassembly

Refer to Figure 3.

1. Remove the clamp ring fastening the cover to the body. Remove the cover and diaphragm.
2. If the boot is to be replaced, remove the piston and boot from the body.

Assembly

1. Clean the inside of the chamber. If a new boot is required it should be cemented to the chamber tube and allowed to dry at least five minutes or until tacky (3M No. EC-2141, or EC-1357 adhesive recommended).
2. Install the piston, making sure the wedge shaft fits into the piston seat. Also insure that the boot fits into the groove on the piston shaft.
3. Cement the new diaphragm to the piston and allow it to dry for at least five minutes or until tacky (3M No. EC-2141 or EC-1357 adhesive recommended).
4. Position the cover and install the clamp ring making sure the diaphragm is between the chamber body and the cover plate.
5. Tighten the clamp ring bolt and nut. Tap the circumference of the ring with a soft hammer to seat the ring and retighten the bolt and nut to 30-35 ft-lbs torque.
6. Soap test the clamp ring area for air leaks when air pressure is applied to the chamber.

ACTUATING SYSTEM

Disassembly

Refer to Figure 4 for disassembled view of brake component parts.

1. Remove the wheel hub and drum assembly, and the brake shoes.
2. Exhaust the air from the system and disconnect the air lines from the air chamber housing.
3. Remove the required brake service chambers from the actuator housings according to the procedure given in Removal and Installation.
4. Pull out the wedge and return spring assembly. Use care to keep from damaging surfaces of wedges or rollers (Figs. 4 and 5).
5. Push in on the spring seat cup to compress the return spring (Figs. 4 and 6) and remove the retaining ring from the groove in the wedge shaft.
6. Disengage the dust boot protectors and dust boots from the actuator casting and then pull the plunger assemblies from the casting bore.
7. Remove the adjusting screw and nut assembly from the adjuster plunger (Figs. 4 and 6).
8. Disassemble screw, nut and dust boot and remove overload spring, link and detent spring.
9. Slide the automatic adjuster lever off

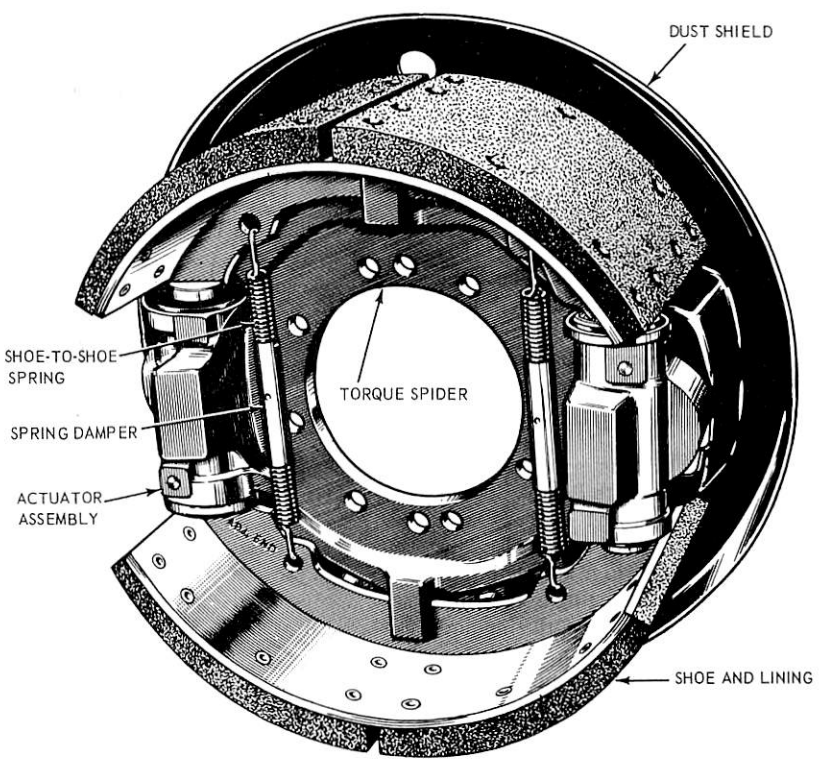

FIG. 1 Bendix Double Wedge Brake

the pin and remove the lever and spring.

Cleaning and Inspection

1. Clean the metal parts in a non-oily solvent. Replace the rubber parts whenever the brake is disassembled. Replace damaged or worn metal parts. Do not use gasoline or hot water solutions on metal parts.
2. Inspect the following parts as outlined and replace worn or damaged pieces:
   a. Check rod and wedge surfaces for scoring.
   b. Check outside surface of the plungers for scoring. On anchoring plunger inserts, check shoe web slot for roughness.
   c. Check the adjusting screws and nuts for sheared threads. Check adjuster ring teeth for wear.
   d. Check shoe web slot of the brake shoe link for roughness and cracks.
   e. Check the rollers for score marks and cracks.
   f. Check the spring clips for fatigue cracks.
   g. Check the adjuster levers for fatigue cracks and distortion. Check for a broken adjuster lever spring.
   h. Inspect the overload spring for fatigue cracks. Replace if test load is less than 13 lbs when spring ends are compressed 0.12 inch apart.
   i. Inspect the adjuster plunger for scores and refinish with crocus cloth or hone.
   j. Inspect the machined bores of the actuator casting for roughness. Use emery cloth to remove any rough areas which interfere with plunger movement. Check automatic adjuster pins for corrosion or distortion. Check the shoe guide bosses and steady rest for roughness on the rubbing surfaces. Inspect the mounting and holes of torque spider for cracks.

Assembly

1. Coat all threads and bearing surfaces of links with Bendix Special Brake Lubricant. Use same lubricant on plunger and also dip spring and lever (Fig. 7) in light oil.
2. Assemble the adjusting screw nut through the adjuster tooth ring and align the slots as shown in Fig. 6.
3. Engage the overload spring securely. The ends of the spring must be in the hooks A and B (Fig. 6) of the nut and ring.
4. Check to be sure the parts are correctly installed by turning the

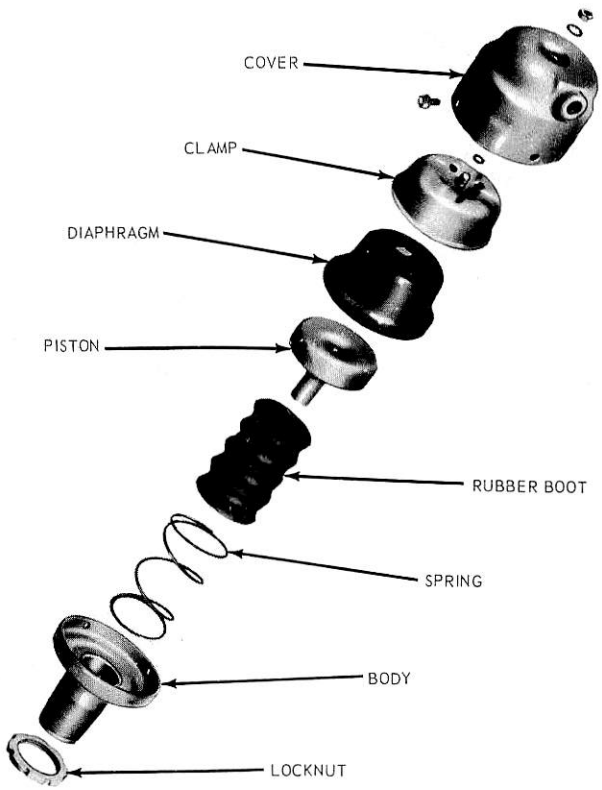

FIG. 2 Roto Chamber—Disassembled

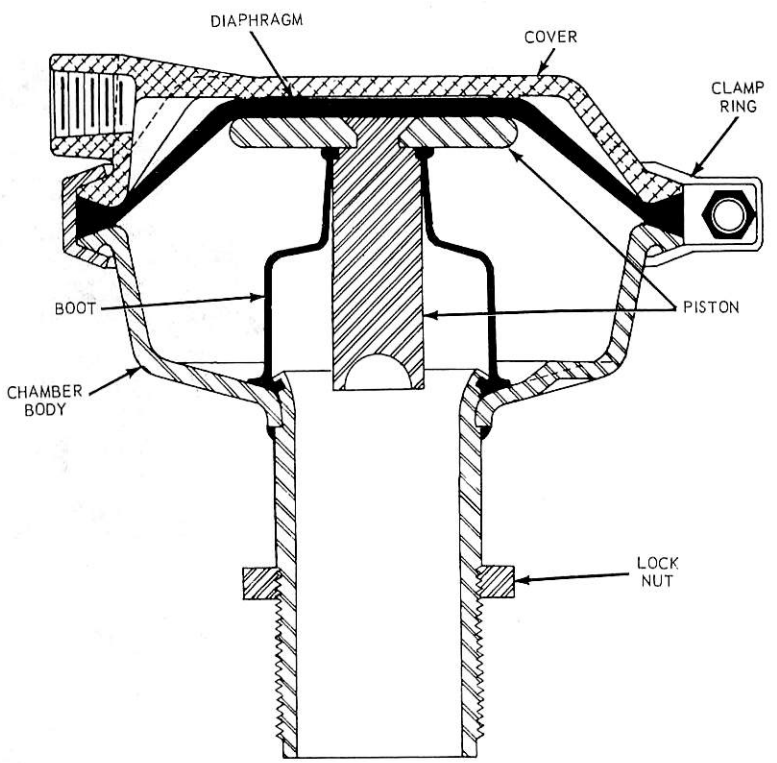

FIG. 3 MGM Service brake Chamber

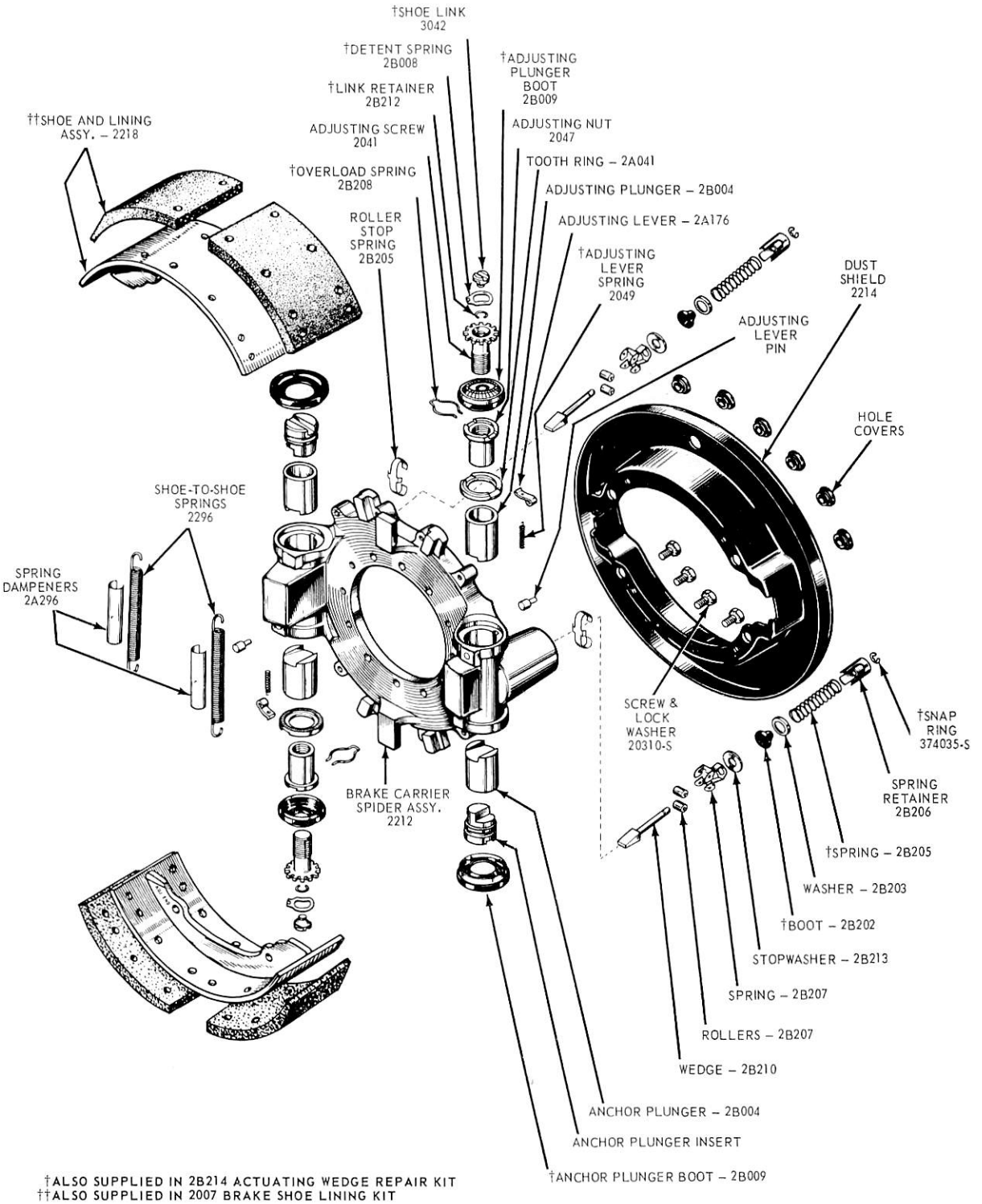

†ALSO SUPPLIED IN 2B214 ACTUATING WEDGE REPAIR KIT
††ALSO SUPPLIED IN 2007 BRAKE SHOE LINING KIT

H1424-E

FIG. 4 Bendix Double Wedge Brake—Disassembled

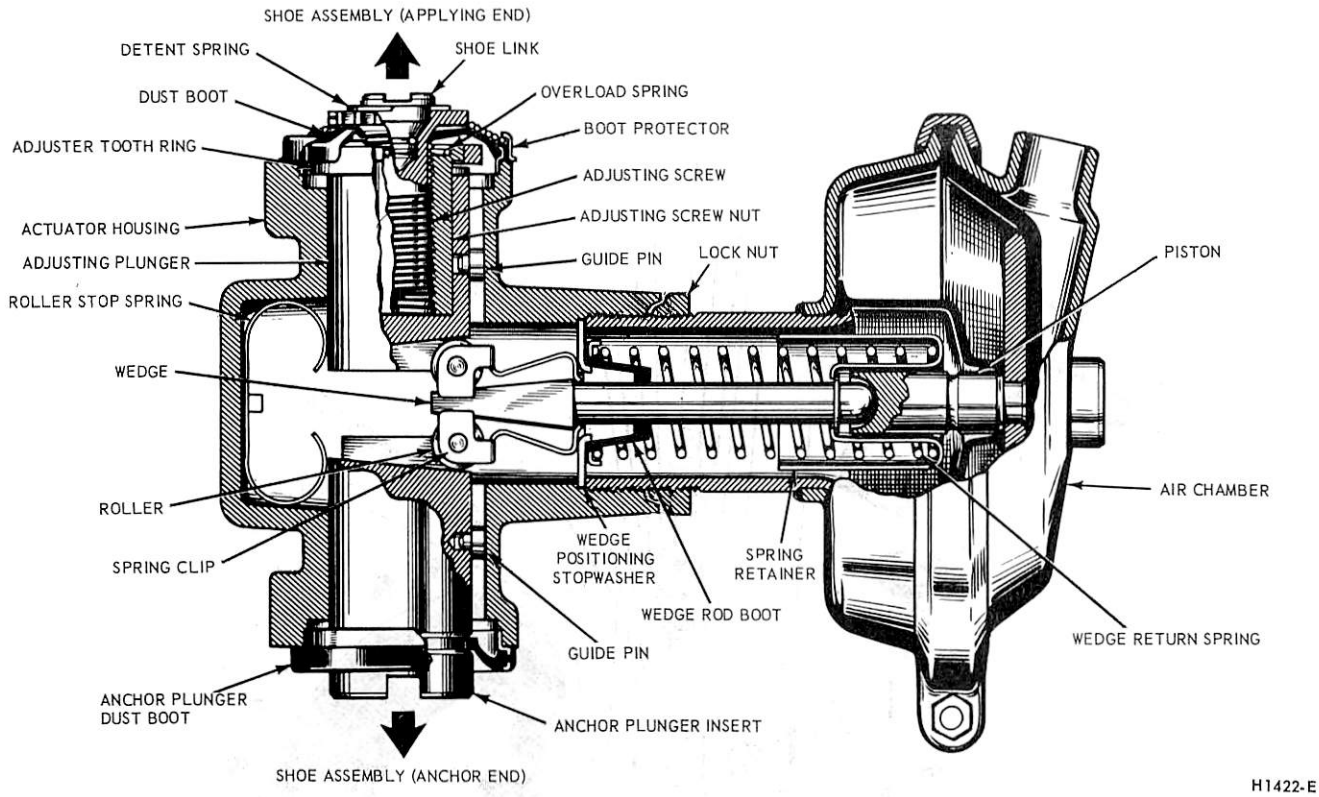

FIG. 5 Bendix Twinplex Brake Actuator

ring clockwise in relation to the nut. The ring will move clockwise against the overload spring, when properly assembled, but must not be movable counterclockwise.

5. Install the detent spring on the link, aligning flats on each part and then press the link into the adjusting screw. Align the detent between starwheel teeth.
6. Install the dust boot on the adjusting screw from the threaded end. Coat the screw threads with lubricant and install the screw in the adjusting nut. **Turn the screw until it bottoms in the nut and then back out screw one full turn.**
7. Coat the inside diameter of the plunger bore with lubricant and install the screw and nut assemblies in the plunger.
8. Install the hook of lever return spring in the spring hole of the lever. Coat the lever and spring with light oil and install them in the cylinder casting by dropping the spring into its well and slipping the lever onto its pin (Fig. 8).
9. Coat the cylinder bore of the torque spider with lubricant and install the plunger assembly in the bore, aligning the guide pin in the plunger with the slot in the casting.
10. Press the metal retainer portion of the dust boot into the cylinder housing until it bottoms against the shoulder of the casting.
11. Assemble the parts shown in Fig. 4 on the wedge shaft.
12. Compress the wedge return spring and install the retainer ring holding the parts in assembly.
13. Lubricate the wedge and rollers and install the wedge assembly into the actuator casting.
14. Make certain that the anchoring plungers are assembled correctly, and that the new dust boots fit into the groove under the slotted end of the plunger inserts.
15. Install the plunger in the cylinder bore, making certain the guide pin in the side of the plunger is aligned in the cylinder slot.
16. With the plunger assembled in the cylinder bore, press the boot

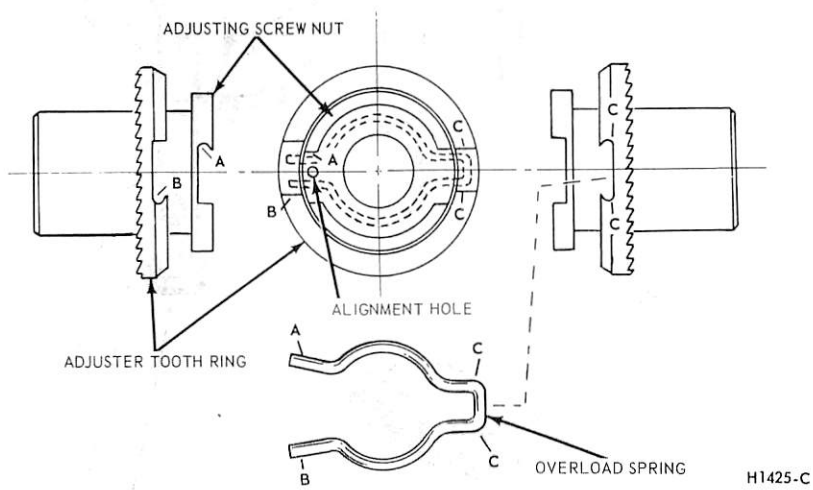

FIG. 6 Automatic Adjuster Details

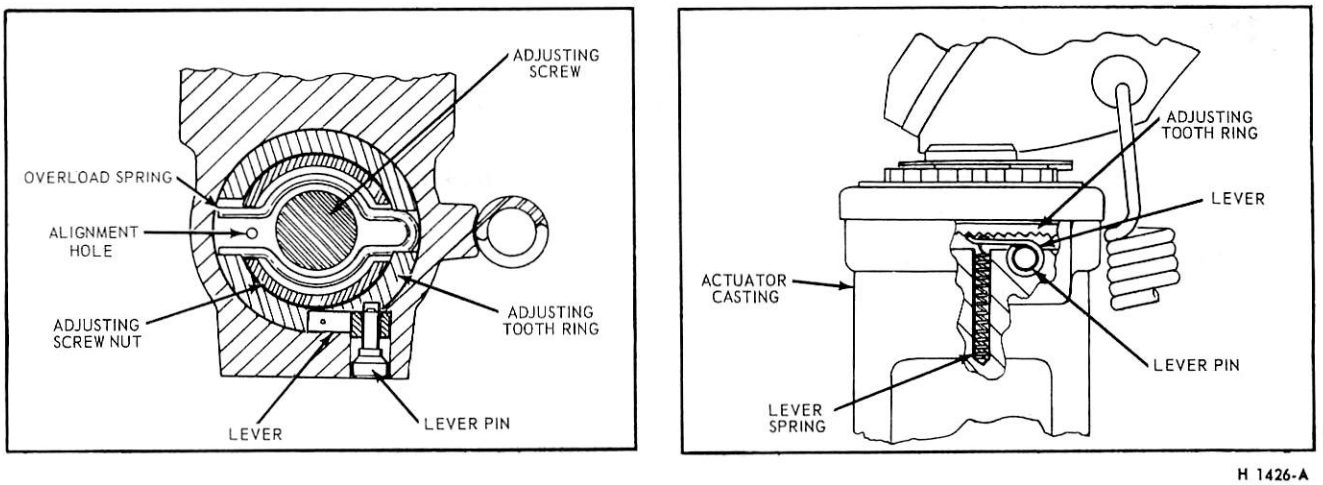

FIG. 7 Automatic Adjuster—Top and Side View

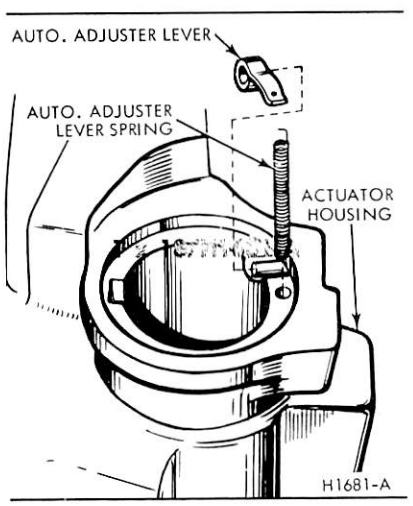

FIG. 8 Assembling Automatic Adjuster Lever and Spring

assembly retainer into the cylinder housing.

17. When installing the brake service chamber, make certain the end of the wedge shaft is seated in the piston assembly of the air chamber. Screw the air chamber into the wedge housing until the chamber bottoms, then back out less than one turn to align the chamber for line connections. Tighten the air chamber lock nut as shown in Removal and Installation.
18. Assemble the shoes and shoe-to-shoe springs to the torque spider. A preliminary setting of the shoes can be made on the bench, using a 15 inch brake drum. To use a drum, set the wedge brake assembly in the drum and apply shop air several times to the air chamber. Each automatic adjuster mechanism will maintain 0.040 inch clearance so assembly can be easily removed from the drum. After mounting the brake assembly to the truck, apply the brakes several times before moving the vehicle to assure proper seating of the brake shoes.

PART 12-48 Air Brakes—Cam Type

Applies To B, C, CT, F, L, LN, N, W, 600 Thru 9000 Series Trucks

COMPONENT INDEX	Page	COMPONENT INDEX	Page
AIR CHAMBER SERVICE BRAKE		MGM SHORTSTOP UNIT	
Disassembly and Assembly	48-04	Removal and Installation	48-03
Removal and Installation	48-03	REAR BRAKE SHOE	
CAMSHAFT		Removal and Installation	48-03
Front Removal and Installation	48-03	SLACK ADJUSTER	
Rear Removal and Installation	48-03	Front Adjustment	48-01
DESCRIPTION	48-01	Rear Adjustment	48-01
FRONT BRAKE SHOE		Removal and Installation	48-03
Removal and Installation	48-03		

DESCRIPTION

The cam-type brake is an air-operated two shoe brake. The front brake (Fig. 1) shoes each use a one piece shoe lining. The rear shoes each use a two piece lining (Fig. 3).

Air is applied to the brake chamber push rod which, in turn, causes a cam to rotate against rollers and forces the brake shoes outward against the brake drums.

ADJUSTMENTS

SLACK ADJUSTER ADJUSTMENT

Apply the brakes and measure the travel of the brake chamber push rod (Fig. 1). If equipped with a Maxi-brake unit, the minimum air pressure should be 90 psi while measuring the travel. The travel should be kept to the minimum possible without causing the brakes to drag. The maximum travel should not exceed the dimensions listed in the specifications. **Adjustment of the yoke on the brake chamber push rod should not be changed.** When new, the yoke is adjusted so that the slack adjuster brake chamber push rod angle is slightly greater than 90 degrees when the brakes are properly adjusted and the brakes are applied. Brake lining wear will not change this angle as long as the slack adjusters are kept adjusted to compensate for lining wear.

FRONT

This procedure applies only to trucks equipped with S-cam operated brakes.

A push rod travel, that reaches or exceeds the maximum listed in the Brake Chamber Push Rod Adjustment table in specifications (Part 12-40) indicates need of adjustment. Turn the adjusting screw clockwise until the push rod travels 3/4 inch in going from released to fully applied position (Fig. 1). When making the adjustment, turn the screw in quarter turns.

REAR

This procedure applies to vehicles equipped with either standard or Maxi-brake S-cam type slack adjusters.

A push rod travel, that reaches or exceeds the maximum listed in the Brake Chamber Push Rod Adjustment table in specifications indicates need of adjustment. Depress the lock sleeve and turn the hexagon head of the wormshaft clockwise until the push rod travels one inch in going from released to fully applied position (Fig. 2). Be sure that the lock sleeve comes back out and engages the hexagon head of the wormshaft so as to lock the adjustment.

When adjusting either front or rear slack adjusters, raise the wheels and make certain that there is no brake drag.

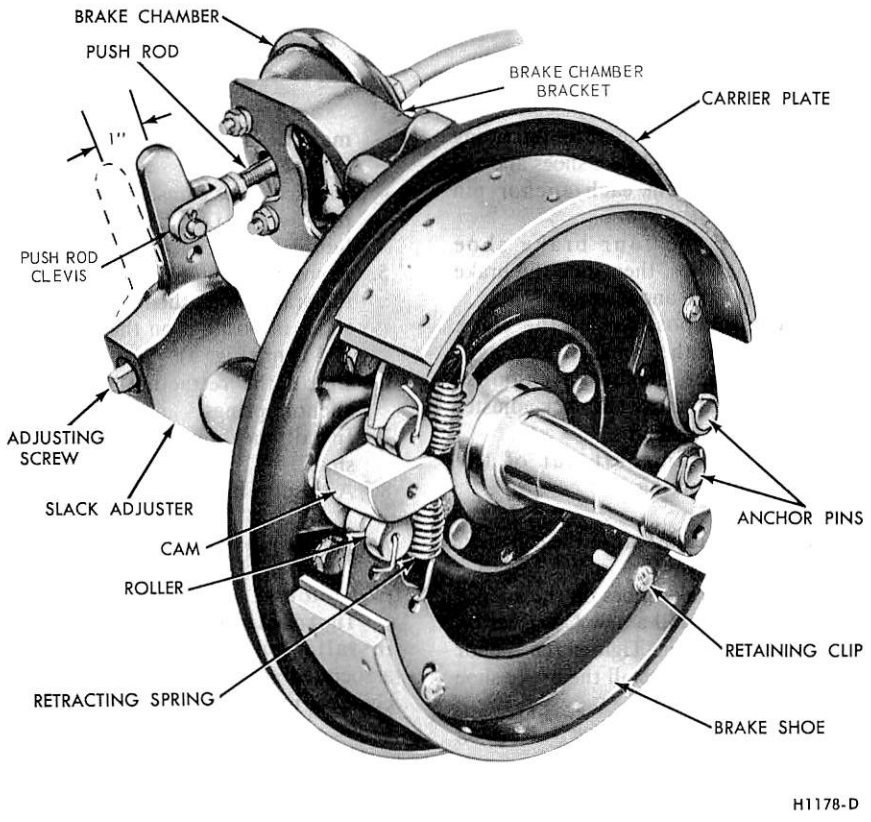

FIG. 1 Front Brake Assembly—S-Cam Type

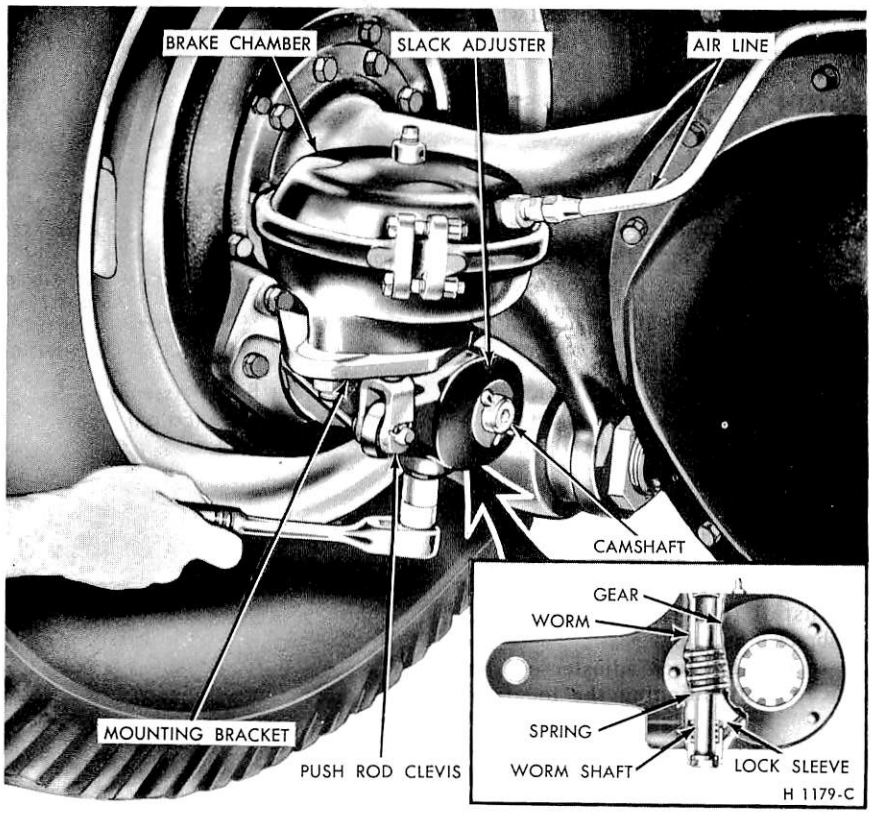

FIG. 2 Rear Brake Adjustment

REMOVAL AND INSTALLATION

BRAKE SERVICE AIR CHAMBER

Removal

1. Release all air from the system, then disconnect the air line at the brake chamber (Figs. 1 and 2).
2. Disconnect the push rod clevis from the slack adjuster.
3. Remove the attaching nuts and the brake chamber assembly.

Installation

1. If a replacement chamber is being installed, transfer the brake line fitting to the replacement brake chamber.
2. Position the brake chamber assembly on the mounting bracket and install the attaching nuts.
3. Install the clevis and cotter pin.
4. Connect the air line to the brake chamber.
5. Build up pressure in the system and inspect for leaks.
6. Adjust the brakes.

SLACK ADJUSTER

Removal

1. Remove the clevis pin attaching the slack adjuster to the brake chamber push rod (Figs. 1 and 2).
2. Remove the lock ring (front) or cotter pin (rear) attaching the slack adjuster to the camshaft.
3. Mark the position of the slack adjuster on the camshaft, then slide the slack adjuster off the shaft.

Installation

1. Place the slack adjuster on the camshaft, aligning the locating marks. Excessive front camshaft end play may be remedied by installing an additional spacer at the cam end of the camshaft. Install the lock ring (front) or the cotter pin (rear).
2. Connect the brake chamber push rod to the slack adjuster by installing the clevis pin in the upper hole, and install the cotter pin.
3. Lubricate the slack adjuster, and adjust the brakes.

FRONT BRAKE SHOE AND CAMSHAFT

Removal

1. Remove the wheel and hub and drum assembly.
2. Remove the brake shoe retracting spring from the brake shoes and the C-washer from each anchor pin (Fig. 1).
3. Remove the four brake shoe retaining clips, then slide the brake shoes off the anchor pin.
4. Mark the position of the slack adjuster on the camshaft housing.
5. Disconnect the brake chamber clevis, and remove the slack adjuster from the camshaft.
6. Pull the camshaft out of the camshaft housing.

Installation

1. Install the camshaft in the camshaft housing.
2. Slide the brake shoes on the anchor pins, and install a new C-washer on each anchor pin. Tighten the anchor pin lock nuts. Install the brake shoe hold down clips.
3. Install the brake shoe retracting spring.
4. Install the slack adjuster on the camshaft, lining up the marks. Install the camshaft snap ring.
5. Connect the brake chamber push rod clevis to the slack adjuster by installing the pin in the upper hole of the slack adjuster.
6. Install the hub and drum and wheel.

EATON TYPE REAR BRAKE SHOE AND CAMSHAFT

Removal

1. Remove the axle shaft, wheels, and hub and drum assembly.
2. Remove the retracting springs and anchor springs, then remove the brake shoes and cam roller assemblies (Fig. 3).
3. Mark the position of the slack adjuster on the camshaft, then remove the slack adjuster (Fig. 2).
4. Remove the camshaft from the backing plate.

Installation

1. Insert the camshaft through the backing plate and into the camshaft housing.
2. Install the brake chamber and bracket assembly.
3. Install the slack adjuster on the camshaft, aligning the locating marks, and install the cotter pin (Fig. 2).
4. Lubricate the camshaft, rollers, and pins with Lubriplate. Do not lubricate the cam face.
5. Position the cam rollers and pins in the brake shoes, then place the brake shoes in position on the anchor pin and cam (Fig. 3).
6. Install the retracting springs and anchor springs.
7. Install the hub, wheels, and axle shaft.
8. Adjust the brakes and slack adjuster.

MGM SHORTSTOP UNIT

Removal and Installation

Instructions for removal and installation of this unit and the associated service brake operating air chamber unit are covered in the Parking Brake section of this manual.

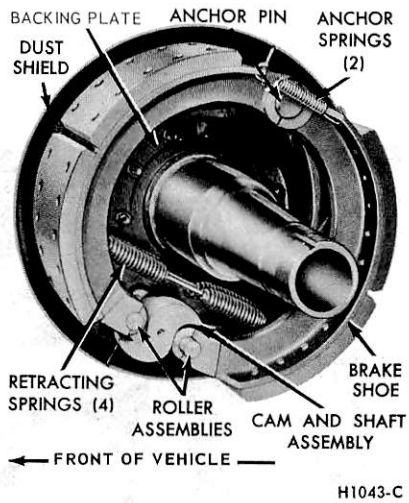

FIG. 3 Rear Brake Assembly—S-Cam Type (Eaton)

OVERHAUL

Major repair operation is applicable only to the brake chamber. If any of the components listed below are found to be worn or damaged they must be replaced.

Slack Adjuster
Front Camshaft
Rear Camshaft
Foot Control Valve
Stop Light Switch
Quick Release Valve
Relay Valve

SERVICE AIR CHAMBER

Disassembly

1. Before disassembling the brake chamber, mark both the non-pressure and pressure plates with relation to the clamping ring so that the bolts of the clamping ring can be placed at the same location during assembly. This will eliminate the possibility of installation interference when the brake chamber is installed on vehicle.
2. Pull the push rod outward against the spring so as to compress the spring and thus relieve the tension of the spring on the diaphragm and clamp ring (Fig. 4). Clamp the push rod in this position by using a vise or vise grip pliers on the rod at the non-pressure plate.
3. Remove the two clamp ring nuts and bolts. Spread the clamp ring slightly, and push the clamp ring off of the non-pressure plate half of the chamber and onto the pressure plate half.
4. Remove the pressure plate and diaphragm assembly from the non-pressure plate half of the chamber.
5. Remove the yoke and lock nut from the push rod. Release the vise clamp from the push rod. Remove the push rod assembly, return spring, seal, and seal spring from the non-pressure plate half of the chamber.

Assembly

Always be sure that the correct return spring is used in any brake chamber. Also be sure that the brake chamber on the opposite side of the axle has the same return spring; otherwise uneven braking will result.

If a new diaphragm is installed in the brake chamber on one side of the axle, a new one should be installed in the corresponding brake chamber on the opposite side also; otherwise uneven braking may result.

1. Rest the push rod assembly upright on a flat surface, then position in order the seal spring, push rod seal, return spring, and non-pressure plate over the push rod.
2. Force the non-pressure plate half of the chamber down against the spring until it rests on the flat surface. While holding the non-pressure plate against the tension of the return spring, clamp the push rod at the non-pressure plate with vise grip pliers or a similar tool (Fig. 4).
3. With the push rod held secure to the non-pressure plate, place the clamp ring over the clamping surface of the non-pressure plate, aligning the marks made before disassembly.
4. Position the diaphragm in the pressure plate half of the chamber and join with the open end of the non-pressure plate half, aligning the marks made during disassembly. While holding the two halves together, work the clamp ring over the clamping surface of the pressure plate half.
5. Using a vise grip pliers or similar tool, clamp one set of clamp ring lugs and draw them together. Assemble the bolt and nut in the other set of lugs and tighten. Remove the vise grip pliers and install the remaining bolt and nut. Tighten each clamp ring bolt and nut only enough to prevent leakage at the clamp ring surface.

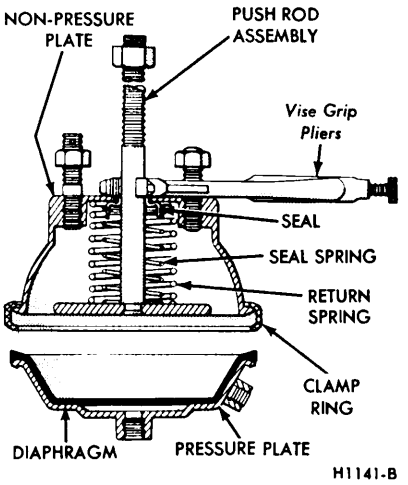

FIG. 4 Service Brake Chamber Assembly

PART 12-50 Vacuum Brake Booster—Single Diaphragm—Dash-Mounted (Bendix)

Applies to F-100—F-250 (6200 GVW)

COMPONENT INDEX	Page	COMPONENT INDEX	Page
BOOSTER		PUSH ROD	
Removal and Installation	50-03	Adjustment	50-02
DESCRIPTION	50-01		

DESCRIPTION

Service information for only the vacuum boosters is given here. Adjustments and repairs for the hydraulic brake systems are given in Parts 12-01 and 12-02.

The single diaphragm type vacuum booster is a self-contained vacuum hydraulic power braking unit. It is of the vacuum-suspended type which utilizes engine intake manifold vacuum and atmospheric pressure for its power. It consists of three basic elements combined into a single unit as shown in Figs. 1 and 2.

The three basic elements are:

1. A vacuum power chamber which consists of a front and a rear shell, a diaphragm, a diaphragm plate, a hydraulic push rod and a vacuum diaphragm return spring.
2. A mechanically-actuated control valve, integral with the vacuum power diaphragm, which controls the degree of power brake application or release in accordance with the foot pressure applied to the valve operating rod through the brake pedal linkage.
3. A hydraulic dual master cylinder which supplies hydraulic pressure to the brake system.

The Bendix single diaphragm, dash-mounted booster is to be replaced as a unit. The vacuum check valve is the only component serviced on the booster assembly.

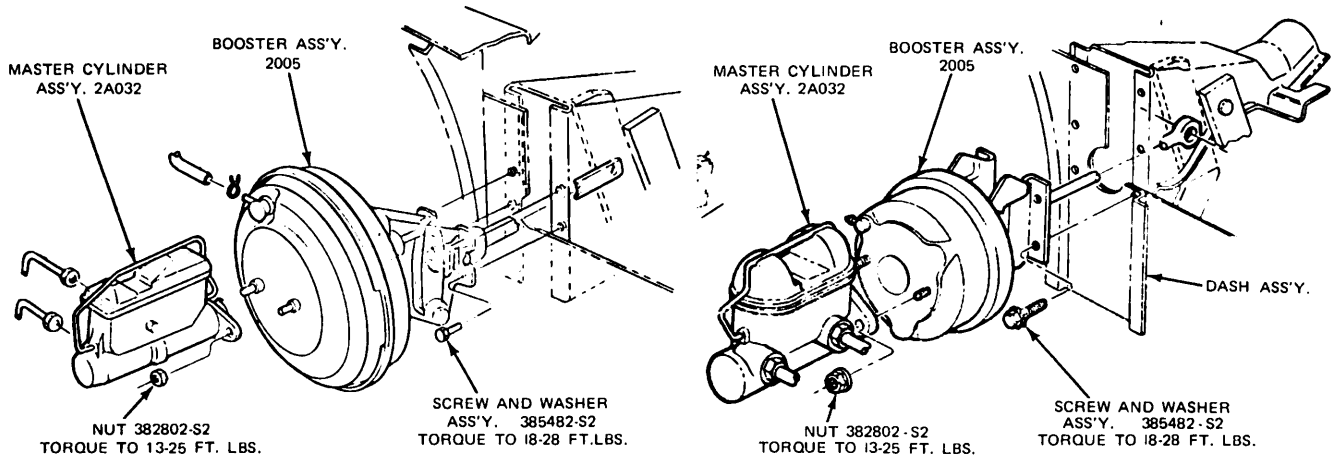

FIG. 1 F-100-250 (6200 G.V.W.) Vacuum Booster and Dual Master Cylinder

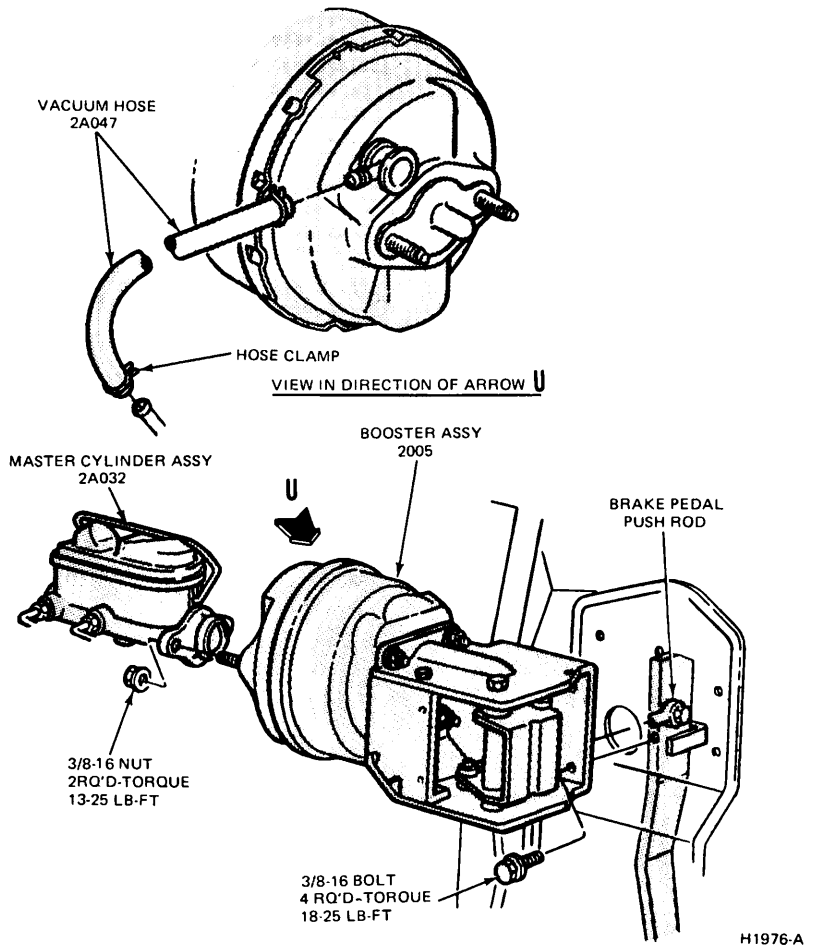

FIG. 2 Econoline Brake Booster Installation

ADJUSTMENTS

PUSH ROD ADJUSTMENT

The push rod is provided with an adjustment screw to maintain the correct relationship between the booster control valve plunger and the master cylinder piston. If the plunger is too long it will prevent the master cylinder piston from completely releasing hydraulic pressure and can cause the brakes to drag. If the plunger is too short it will result in excessive pedal travel and an undesirable clunk in the booster area. Remove the master cylinder for access to the booster push rod.

To check the adjustment of the screw, fabricate a gauge of the dimensions shown in Fig. 3. Then place the gauge against the master cylinder mounting surface of the booster body as shown in Fig. 3. The push rod screw should be adjusted so that the end of the screw just touches the inner edge of the slot in the gauge.

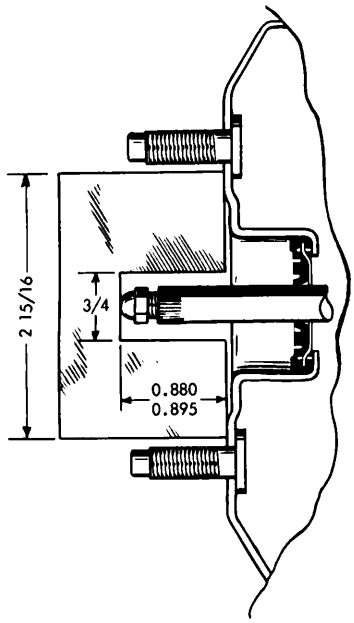

FIG. 3 Booster Push Rod Gauge Dimensions and Adjustment

REMOVAL AND INSTALLATION

BOOSTER

F-100-350

Removal

1. Support the master cylinder with a prop from the underside.
2. Remove the master cylinder-to-booster retaining nuts.
3. Loosen the clamp that secures the manifold vacuum hose to the booster, and then remove the hose.
4. Pull the master cylinder off the booster and leave it supported by the prop far enough away to allow removal of the booster assembly.
5. From inside the cab, remove the attaching bolt, nut and plastic bushings and disconnect the booster push rod from the brake pedal. Remove the nuts that retain the booster mounting bracket to the dash panel.
6. Remove the booster assembly from the engine compartment.

Installation

1. Mount the booster and bracket assembly to the engine side of the dash panel by sliding the bracket mounting bolts and valve operating rod in through the holes in the dash panel.
2. From inside the cab, install the booster mounting bracket-to-dash panel retaining nuts.
3. Position the master cylinder to the booster assembly, install the retaining nuts and remove the prop from underneath the master cylinder.
4. Connect the manifold vacuum hose to the booster and secure with the clamp.
5. From inside the cab connect the booster valve operating rod to the brake pedal with the attaching bolt, nut and plastic bushings.
6. Start the engine and check the operation of the brake system.

ECONOLINE

Removal

1. Disconnect the two hydraulic brake lines from the master cylinder.
2. Remove the cotter pin and clevis pin which secures the brake pedal push rod to the bellcrank.
3. Remove the four 3/8-16 bolts which secure the master cylinder and bracket assembly to the dash panel (Fig. 2).
4. Detach the vacuum hose from the brake booster and remove the booster and master cylinder assembly.
5. Remove the two 3/8-16 nuts which secure the master cylinder to the booster and remove the master cylinder.

Installation

1. Check and, if necessary, adjust the brake booster push rod (Fig. 3).
2. **Attach the master cylinder to the booster and torque the retaining nuts to 13-25 ft-lbs.**
3. Attach the vacuum hose to the brake booster.
4. **Position the master cylinder and booster assembly on the dash panel. Install the four retaining bolts and torque them to 18-25 ft-lbs.**
5. Attach the brake pedal push rod to the bellcrank. Insert and secure the cotter pin.
6. Connect the hydraulic brake tubes to the master cylinder. Torque the tube nuts to specifications. Bleed the hydraulic system as outlined in Part 12-01.

PART 12-52 Vacuum Brake Booster—Tandem Diaphragm—Dash-Mounted (Bendix)

Applies To F-350 With Disc Brakes

COMPONENT INDEX	Page	COMPONENT INDEX	Page
BOOSTER		PUSH ROD	
Removal and Installation	52-02	Adjustment	52-01
DESCRIPTION	52-01		

DESCRIPTION

Service information for only the vacuum booster is given here. Adjustments and repairs for the hydraulic brake system is given in Parts 12-01 and 12-24.

The tandem diaphragm type vacuum booster, is a self-contained vacuum hydraulic power braking unit. It is of the vacuum suspended type which uses engine intake manifold vacuum and atmospheric pressure for its power. It consists of three basic elements combined into a single unit, as shown in Fig. 1.

These three basic elements are:

1. A vacuum power chamber which consists of a front and a rear shell, a center plate, a front and a rear diaphragm, a hydraulic push rod and a vacuum diaphragm return spring.
2. A mechanically actuated control valve, integral with the vacuum power diaphragms, controls the degree of power brake application or release in accordance with the foot pressure applied to the valve operating rod through the brake pedal linkage.
3. A hydraulic dual master cylinder which supplies hydraulic pressure to the brake system.

The Bendix tandem diaphragm, dash-mounted booster is to be replaced as a unit.

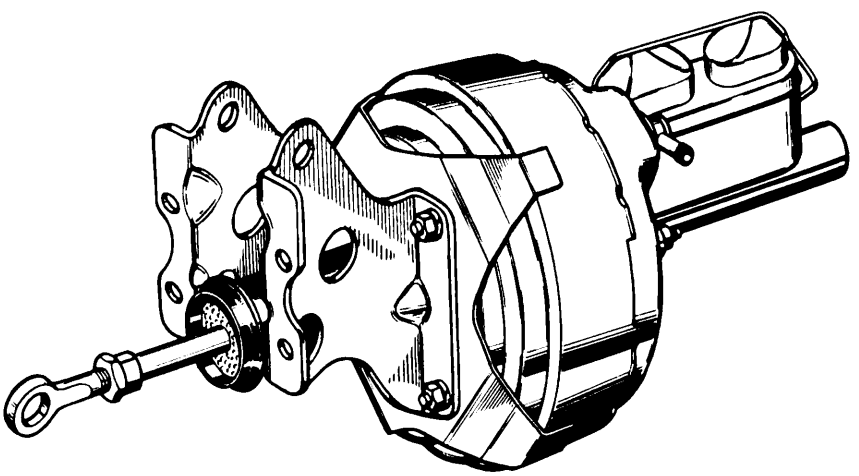

H1606-C

FIG. 1 Bendix Diaphragm, Dash-Mounted Booster

ADJUSTMENTS

PUSH ROD ADJUSTMENT

The push rod is provided with an adjustment screw to maintain the correct relationship between the booster control valve plunger and the master cylinder piston. If the plunger is too long it will prevent the master cylinder piston from completely releasing hydraulic pressure and can cause the brakes to drag. If the plunger is too short it will result in excessive pedal travel and an undesirable clunk in the booster area. Remove the master cylinder for access to the booster push rod.

To check the adjustment of the screw, fabricate a gauge of the dimensions shown in Fig. 2. Then place

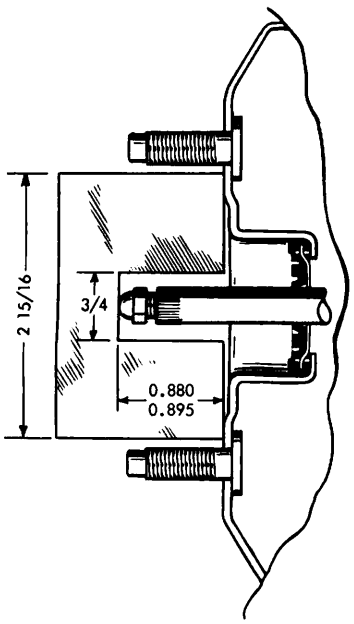

H1330-D

FIG. 2 Bendix Booster Push Rod Gauge Dimensions and Adjustments

the gauge against the master cylinder mounting surface of the booster body as shown in Fig. 2. The push rod screw should be adjusted so that the end of the screw just touches the inner edge of the slot in the gauge.

REMOVAL AND INSTALLATION

BOOSTER

Removal

1. Support the master cylinder with a prop from the underside.
2. Remove the master cylinder-to-booster retaining nuts.
3. Loosen the clamp that secures the manifold vacuum hose to the booster, and then remove the hose.
4. Pull the master cylinder off the booster and leave it supported by the prop far enough away to allow removal of the booster assembly.
5. From inside the cab, remove the attaching bolt, nut and plastic bushings and disconnect the booster push rod from the brake pedal. Remove the nuts that retain the booster mounting bracket to the dash panel.
6. Remove the booster assembly from the engine compartment.

Installation

1. Mount the booster and bracket assembly to the engine side of the dash panel by sliding the bracket mounting bolts and valve operating rod in through the holes in the dash panel.
2. From inside the cab, install the booster mounting bracket-to-dash panel retaining nuts.
3. Position the master cylinder to the booster assembly, install the retaining nuts and remove the prop from underneath the master cylinder.
4. Connect the manifold vacuum hose to the booster and secure with the clamp.
5. From inside the cab connect the booster valve operating rod to the brake pedal with the attaching bolt, nut and plastic bushings.
6. Start the engine and check the operation of the brake system.

PART 12-53 Vacuum Brake Booster—Single Diaphragm, Frame-Mounted (Bendix)

Applies to 500–900 Series except P-500

COMPONENT INDEX	Page	COMPONENT INDEX	Page
BOOSTER		Removal and Installation	53-02
Description	53-01	CONTROL VALVE	
Disassembly and Assembly	53-03	Removal and Installation	53-02

DESCRIPTION

BENDIX (HYDROVAC) FRAME-MOUNTED DIAPHRAGM TYPE BOOSTER

The frame-mounted diaphragm type vacuum booster consists of a vacuum chamber, a hydraulically actuated vacuum control valve, and a hydraulic cylinder all in a single sealed unit (Fig. 1). A vacuum check valve, of the spring loaded disc type, is installed in the system adjacent to the vacuum source for maintaining maximum vacuum in the system.

Two booster assemblies are used on a split brake system.

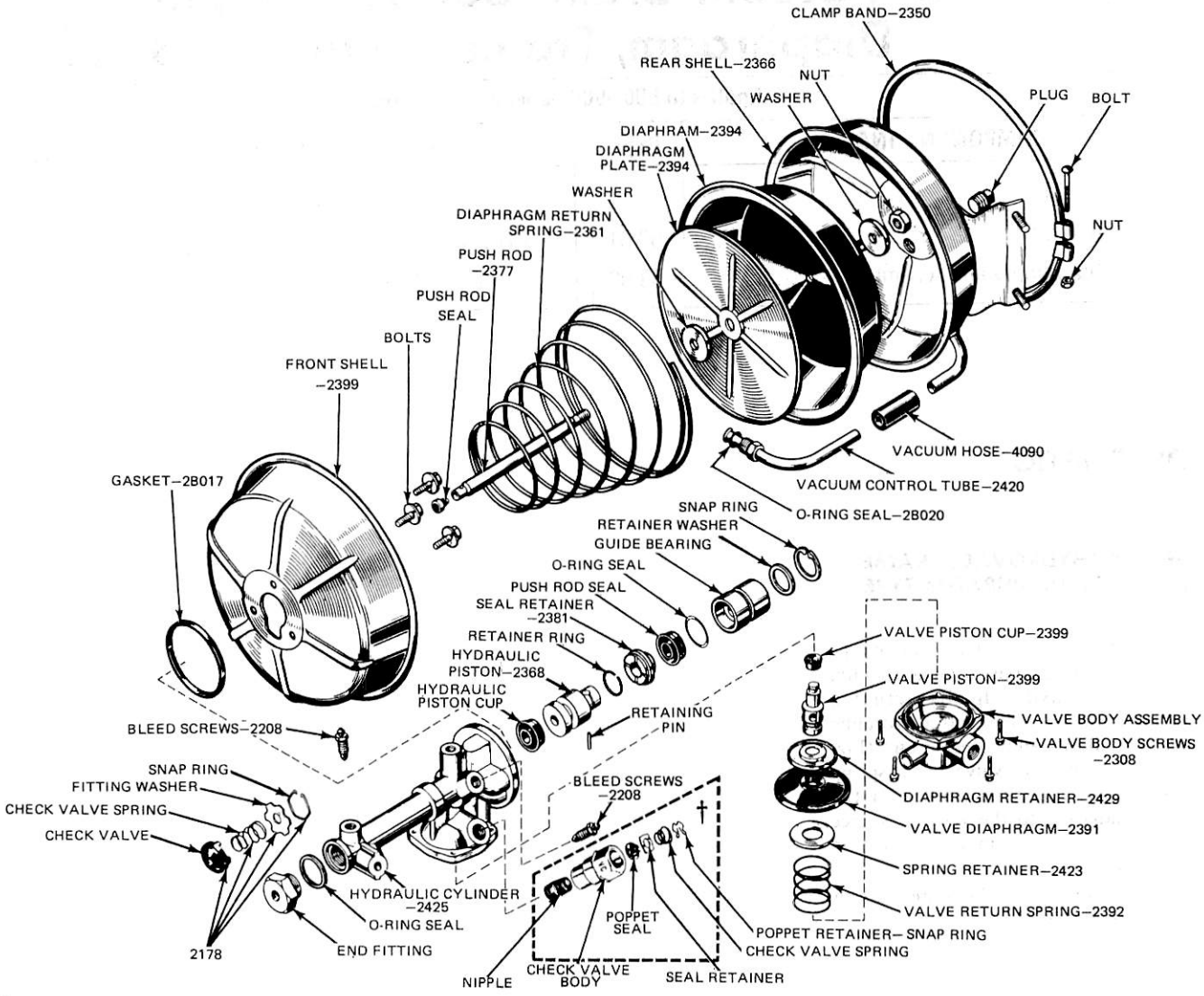

† USED ON SPLIT SYSTEM INSTALLATION ONLY.

H1019-E

FIG. 1 Bendix Single Diaphragm, Frame-Mounted Booster — Disassembled

REMOVAL AND INSTALLATION

BENDIX DIAPHRAGM-TYPE FRAME-MOUNTED BOOSTER

Removal

1. Depress the brake pedal several times to remove all vacuum from the system.
2. Loosen the booster air inlet tube clamp, and remove the tube.
3. Disconnect the hydraulic lines and vacuum hose from the booster.
4. Remove the booster mounting bolts, and remove the booster from the bracket.

Installation

1. Position the booster on the mounting bracket. Then, install the mounting bolts using new lockwashers.
2. Connect the hydraulic lines. Tighten the connections securely.
3. Connect the air inlet tube to the booster. Tighten the hose clamp securely.
4. Bleed the brake system as outlined under Hydraulic System Bleeding, Part 12-01.
5. Connect the vacuum tube to booster hose to the booster. Tighten the hose clamps securely.
6. Perform the checks and tests as outlined in Part 12-01.

CONTROL VALVE

Removal and Installation

1. Clean all dirt from around the breather hose to air inlet tube connection and valve cover to booster mating surface.
2. Disconnect the breather hose from the air inlet tube and remove and discard the 4 valve body and cover attaching screws.
3. Discard the valve body and cover assembly, diaphragm, diaphragm plate, return spring and spring retainer.

4. Assemble a new diaphragm plate and diaphragm to the control valve piston. Make certain the inner bead of the diaphragm is seated in the groove of the control valve piston.
5. Install the spring retainer over the poppet seat end of the diaphragm seating against the diaphragm with the flange toward the valve body. Position the return spring between the spring retainer and the valve body assembly.
6. Seat the bead of the diaphragm in the groove around the valve cover flange and attach the cover to the slave cylinder with the four (4) cap screws tightened to 40-60 in-lbs.
7. Attach the breather hose to the air inlet tube. Inspect the entire length of this hose and replace it if any indication of leakage is noted.
8. Check booster operation.

OVERHAUL

BENDIX FRAME-MOUNTED DIAPHRAGM-TYPE BOOSTER

Disassembly

1. Scribe a mark across the front and rear shells and across the flange of the hydraulic cylinder. Disconnect the control tube nut from the control valve seat, and remove the seal from the tube.
2. Remove the nut and bolt from the clamp band. Disassemble the clamp band and the rear shell. **The plug should be removed from the rear shell only if the plug is damaged.**
3. Roll the bead of the diaphragm back from the flange of the front shell. Compress the diaphragm return spring slightly, and remove the snap ring from the groove near the end of the hydraulic cylinder bore. **Remove the hydraulic parts, push rod and diaphragm parts as an assembly.**
4. Slide the diaphragm return spring off the hydraulic piston end of the push rod. Remove the 3 bolts securing the hydraulic cylinder to the front shell, and remove the hydraulic cylinder and gasket from the front shell.
5. **The diaphragm assembly should be removed from the push rod only if necessary to replace damaged parts.**
6. Remove the retainer ring from the groove in the hydraulic piston, and press the pin from the hole in the piston and push rod. Remove the cup from the piston. If a new seal is to be installed in the end of the push rod, remove the old seal from the rod. **Be careful to avoid damaging the rod. Slide the seal retainer, seal, O-ring, guide bearing, retainer washer and snap ring from the push rod.**
7. Scribe a mark across the flanges of the valve body and housing. Remove the 4 screws, and then remove the valve body (Fig. 1). Remove the cups from the control valve piston.

Assembly

1. Install the check valve, spring, washer and snap ring in the hydraulic cylinder end fitting. Then assemble the O-ring seal and end fitting on the hydraulic cylinder.
2. Install the cups, back-to-back, on the control valve piston. Then assemble the piston, diaphragm retainer and valve diaphragm. **Be sure the inner bead of the diaphragm is seated in the piston groove.**
3. Install the spring retainer, flange down, on the spring in the valve body. Install the piston and diaphragm assembly on the retainer. Press the outer bead of diaphragm into the groove of the valve body.
4. Dip the control valve piston in clean heavy duty ESA-M6C25-A (C6AZ-10542-A) brake fluid, and assemble the piston in the control valve hydraulic cylinder bore. Align the scribe marks on valve body and housing, and attach with screws. Tighten screws to 40-60 in-lbs.
5. To install a new push rod seal in the push rod, place a new seal on a clean block of wood, rubber side down. With the push rod resting vertically on the seal stem, strike the threaded end of the push rod with a rawhide hammer to seat the seal stem in the push rod. **Be sure the shoulders of the push rod and seal are in contact.**
6. Slide the snap ring, retainer washer, guide bearing with O-ring seal in outer groove of guide bearing, seal cup and seal retainer on the push rod as shown in Fig. 1.
7. Attach the piston to the push rod with the retaining pin and retainer ring. Dip the cup in clean heavy duty ESA-M6C25-A (C6AZ-19542-A) brake fluid, and install the cup on the piston.
8. If the diaphragm, diaphragm plate and push rod were disassembled, assemble the nut, washer, diaphragm plate, diaphragm, washer and nut on the push rod. Install the nuts on the end of the push rod in two places.
9. Install the gasket in the groove on the flange end of the hydraulic cylinder. Align the cutout in the front shell with the port in the hydraulic cylinder, and install the cap screws. Tighten screws.
10. Install the diaphragm return spring, large coil first, against the diaphragm plate. Wet the hydraulic cylinder bore with the clean heavy duty ESA-M6C25-A (C6AZ-19542-A) brake fluid, and ease the hydraulic piston, cups and seals into the cylinder bore. Roll back the outer edge of the diaphragm, and press against the diaphragm to compress the return spring. Guide the parts on the push rod into the hydraulic cylinder bore, and install the snap ring in the cylinder bore. Be sure the snap ring is fully seated before releasing the pressure on the spring.
11. **Lightly coat both sides of the diaphragm bead with a silicone lubricant or talcum powder. Align the scribe marks on the front and rear shells, and press the rear shell flange and diaphragm bead into position against the front shell flange. Assemble the clamp band on the shells, and secure with bolt and nut. Tap the band lightly with a rawhide hammer while tightening the bolt and nut to specifications.**
12. Assemble a new seal on the control vacuum tube. Then assemble the tube and hose to the rear shell tube. Tighten the tube nut to specifications.
13. If removed, install the plug in the rear shell.

PART 12-54 Vacuum Brake Booster—Tandem Diaphragm—Frame Mounted (Bendix)

Applies to LT–LNT–LTS 800 and LT–LTS 900 With Single Brake System

COMPONENT INDEX	Page	COMPONENT INDEX	Page
BOOSTER		Disassembly	54-02
		Removal and Installation	54-01
Assembly	54-03	CONTROL VALVE	
Cleaning and Inspection	54-03	Removal and Installation	54-01
		DESCRIPTION	54-01

DESCRIPTION

The tandem diaphragm (Hydrovac) (Fig. 1) is a self-contained hydraulic vacuum power brake unit actuated by the vehicle master cylinder pressure.

The tandem diaphragm Hydrovac consists of three functional components:

1. Two power chambers that contain separate power diaphragms that are connected by a push rod shaft extension to a single push rod, hydraulic cylinder.
2. A hydraulic cylinder that contains a hydraulic piston and cup assembly and a residual pressure check valve.
3. A vacuum control valve that is actuated by a control valve piston. The control valve piston in turn is actuated by pressure from the master cylinder.

REMOVAL AND INSTALLATION

BOOSTER ASSEMBLY

Removal

1. Depress the brake pedal several times to remove all vacuum from the system.
2. Loosen the booster air inlet tube clamp, and remove the tube.
3. Disconnect the hydraulic lines and vacuum hose from the booster.
4. Remove the booster mounting bolts, and remove the booster from the bracket.

Installation

1. Position the booster on the mounting bracket. Then, install the mounting bolts using new lockwashers.
2. Connect the hydraulic lines. Tighten the connections securely.
3. Connect the air inlet tube to the booster. Tighten the hose clamp securely.
4. Bleed the brake system as outlined under Hydraulic System Bleeding, Part 12-01.
5. Connect the vacuum tube to booster hose to the booster. Tighten the hose clamps securely.
6. Perform the checks and tests as outlined in Part 12-01.

CONTROL VALVE

Removal and Installation

1. Clean all dirt from around the breather hose to air inlet tube connection and valve cover to booster mating surface.
2. Disconnect the breather hose from the air inlet tube and remove and discard the 4 valve body and cover attaching screws.
3. Discard the valve body and cover assembly, diaphragm, diaphragm plate, return spring and spring retainer.
4. Assemble a new diaphragm plate and diaphragm to the control valve piston. Make certain the inner bead of the diaphragm is seated in the groove of the control valve piston.
5. Install the spring retainer over the poppet seat end of the diaphragm seating against the diaphragm with the flange toward the valve body. Position the return spring between the spring retainer and the valve body assembly.
6. Seat the bead of the diaphragm in the groove around the valve cover flange and attach the cover to the slave cylinder with the four (4) cap screws tightened to 40-60 in-lbs.
7. Attach the breather hose to the air inlet tube. Inspect the entire length of this hose and replace it if any indication of leakage is noted.
8. Check booster operation.

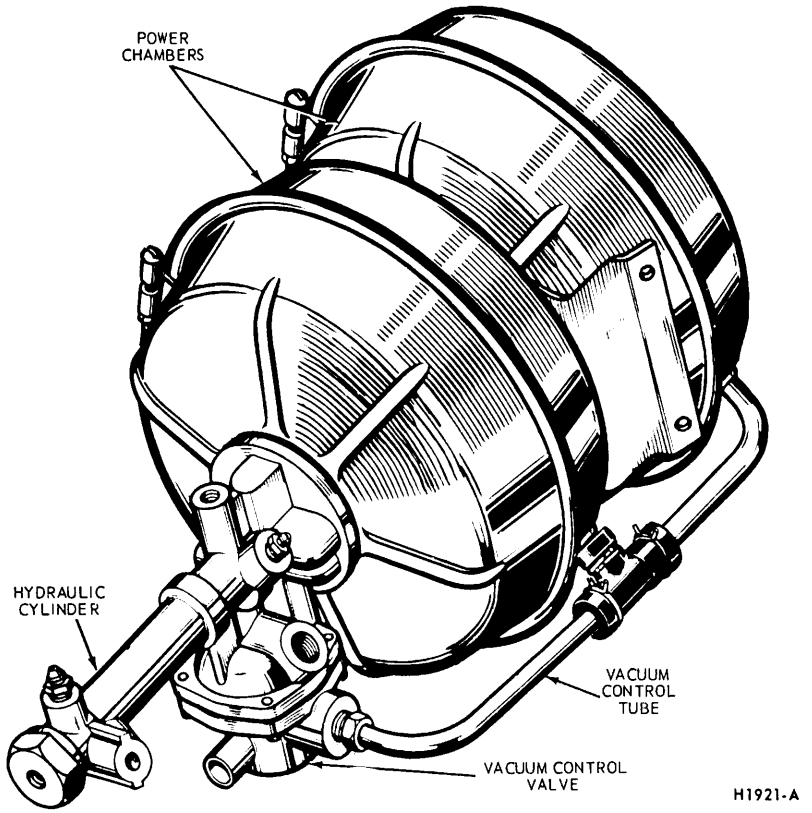

FIG. 1 Bendix Tandem Diaphragm — Frame-Mounted Vacuum Booster

OVERHAUL

The following service procedures cover disassembling, cleaning, inspecting and assembling the tandem diaphragm Hydrovac. Always be careful when handling hydraulic parts to avoid getting mineral oil or grease on the parts. Do not handle rubber cups or seals with greasy hands.

When overhauling a unit, always use the correct repair kit for that unit. Plug all open ports and clean the dirt from the outside of the unit with a mild soap or a detergent solution. Then, remove the plugs and apply clean, dry air pressure to the hydraulic input port on top of the hydraulic cylinder to blow brake fluid out of the unit.

Disassembly

Refer to Figure 2.

1. Scribe a mark across both clamping rings onto the shell surfaces beside each ring. Scribe across the top surface of the hydraulic cylinder flange and onto the front shell. Also scribe across the flanges of the control valve body and control valve housing below the hydraulic cylinder.
2. Disconnect the control tube and nut from the control valve port. Remove the three hose clamps and the hose tee. Remove the ring seal from the control tube.
3. Remove the nut, screw and rear clamping ring; then remove the rear shell (Fig. 3).
4. Remove the nut, screw and front clamping ring. Then separate the front, center and rear shells and remove the diaphragm assemblies.
5. Clamp the hydraulic cylinder in a vise equipped with soft-jawed inserts. Be careful to avoid damage to the cylinder.
6. Press on the spring retainer to compress the diaphragm return spring and remove the three bolts that secure and support plate and front shell to the hydraulic cylinder (Fig. 4). Slowly release pressure on the return spring and pull the push rod and hydraulic piston from the hydraulic cylinder.
7. Slide the return spring off the hydraulic piston end of the push rod. Do not remove the spring retainer from the other end of the push rod except to replace damaged parts.
8. Remove the snap ring from its groove in the hydraulic piston and press the valve plunger pin from the hole in the piston and push rod (Fig. 5).
9. Slide the hydraulic piston, snap ring, seal retainer (piston stop), push rod cup, push rod bearing and support plate and piston stop assembly from the push rod.
10. Remove the cup from the hydraulic piston and O-ring from its groove in the push rod bearing.
11. Remove the end fitting from the hydraulic cylinder. Use needlenose pliers to remove the snap ring from the end cap and disassemble the residual pressure check valve parts.
12. Remove the end fitting seal from the push rod. **Be careful not to scratch the push rod.**
13. Clamp the nut on the push rod seat end of the rear shaft in a vise and remove the nut by unscrewing the shaft with a drift punch through the holes in the shaft which are close to

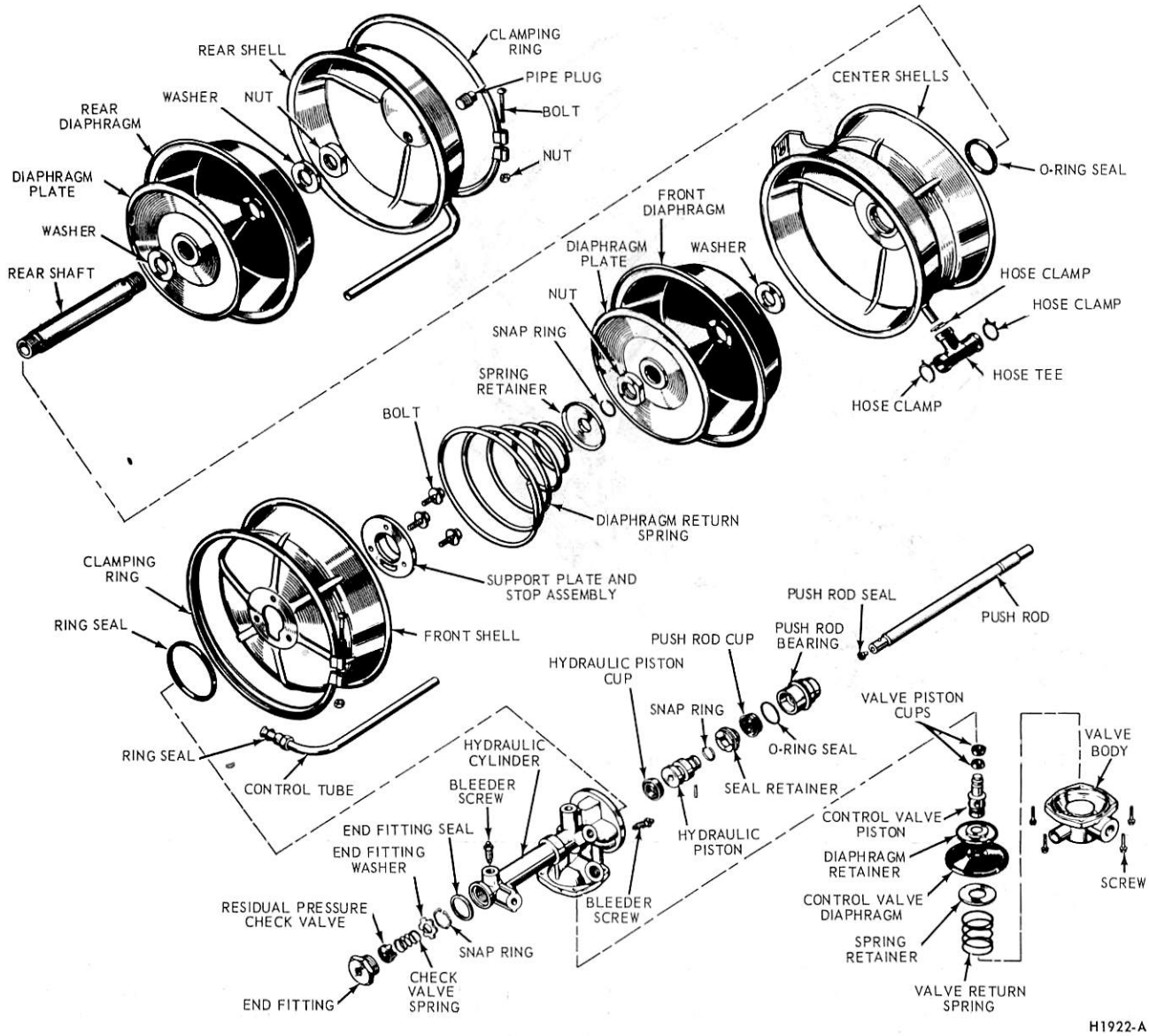

FIG. 2 Bendix Tandem Diaphragm — Frame-Mounted Vacuum Booster — Disassembled

the rear diaphragm (Fig. 6). Remove the assembly from the vise and then remove the front diaphragm and diaphragm plate from the shaft.

14. Slide the center shells off the shaft. Use an ice pick or probe to remove the O-ring seal from its groove in the hub of the center shells.
15. Clamp the nut on the rear end of the shaft in a vise and loosen the shaft with a drift punch as in Step 13. Remove the nut, washer, rear diaphragm, diaphragm plate and washer from the shaft.
16. Remove the screws, valve body and control valve parts from the valve housing (Fig. 7).
17. Remove the cups from the control valve piston. Slide the control valve diaphragm and diaphragm retainer off the opposite end of the piston.

Cleaning and Inspection

Thoroughly clean all metal parts in a metal parts cleaner. Discard all old parts which are to be replaced with new parts.

Rinse all metal hydraulic parts in clean isopropyl alcohol. Clean plastic parts and any rubber parts to be re-used in clean isopropyl alcohol.

Inspect the diaphragms for kinks, cracks or tears and replace any questionable diaphragms. Inspect all metal and plastic parts for burrs, nicks, cracks or scores and remove them with crocus cloth or replace the damaged part.

Inspect the shells for dents, cracks or broken welds. Do not attempt to disassemble the center shell assembly. Inspect the hydraulic cylinder bore and control valve bore for surface damage. Polish with crocus cloth to remove deposits, light score marks or pitted areas. Replace part if damage cannot be removed with crocus cloth.

Blow out all ports with clean, dry shop air to remove metal parts cleaner and dirt. Rinse bores and passages with clean isopropyl alcohol or brake fluid.

Assembly

1. Assemble the valve piston cups back-to-back in grooves of the control valve piston (Fig. 7).
2. Slide the diaphragm retainer, flange side first, onto the other end of the control valve piston. Wet the I.D. of the diaphragm in alcohol and slide it over the end of the piston and seat it against the retainer. Assemble the spring retainer onto the hub of the diaphragm with the flange side away from the diaphragm.

3. Assemble the control valve piston and diaphragm assembly on the valve return spring. Position the spring in the valve body around the vacuum poppet guides and press the diaphragm bead firmly into the groove on the flange of the valve body.
4. Dip the control valve piston and cups in clean brake fluid and insert them in the control valve bore of the hydraulic cylinder. Align the scribe marks on the flanges of the valve body and housing and attach the body to the housing with four screws. Tighten the screws to 40-60 in-lbs.
5. Assemble the washer, rear diaphragm plate, rear diaphragm and washer as shown in Fig. 6 on the end of the shaft close to the holes in the shaft.
6. Install the nut on the end of the shaft and grip the nut in a vise. Use a drift through the shaft holes to tighten the nut to 10-15 ft-lbs. Stake the nut in two places.
7. Assemble the O-ring seal in its groove inside the hub of the center shells. Coat the seal and bearing surface with a silicon lubricant. Coat the outer surface of the rear shaft with a silicone lubricant.
8. Insert the end of the rear shaft, from side shown, through the bearing hub and seal of the center shells.
9. Assemble the washer, front diaphragm, and diaphragm plate on the end of the shaft. Screw the nut on the shaft and tighten the nut to 10-15 ft-lbs. Stake the nut in two places.
10. To assemble a new push rod seal (Fig. 5) in end of the push rod, place the new seal on a clean block of wood, rubber face down. With the push rod resting vertically on the seal stem, strike the end of the push rod with a rawhide hammer to seat the seal. Be sure that the shoulders of the seal and rod are in contact.
11. Wet the push rod, push rod bearing and all hydraulic parts in clean brake fluid. Slide the support plate and piston stop assembly, push rod bearing, with O-ring seal installed in its groove, push rod cup, and seal retainer on the push rod as shown.
12. Position the snap ring on the piston but **not** in its groove. Attach the piston to the end of the push rod with the valve plunder pin. Then, slide the snap ring into its groove in the piston to cover the plunger pin holes.
13. Dip the hydraulic piston cup in clean brake fluid and assemble it on the piston as shown.

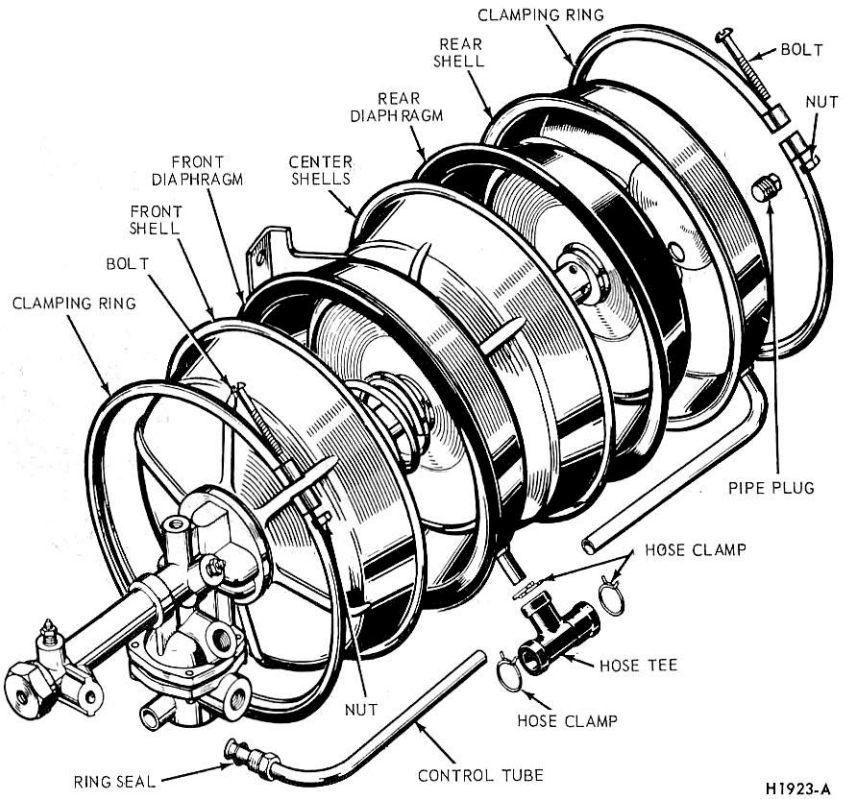

FIG. 3 Separating Booster Shells

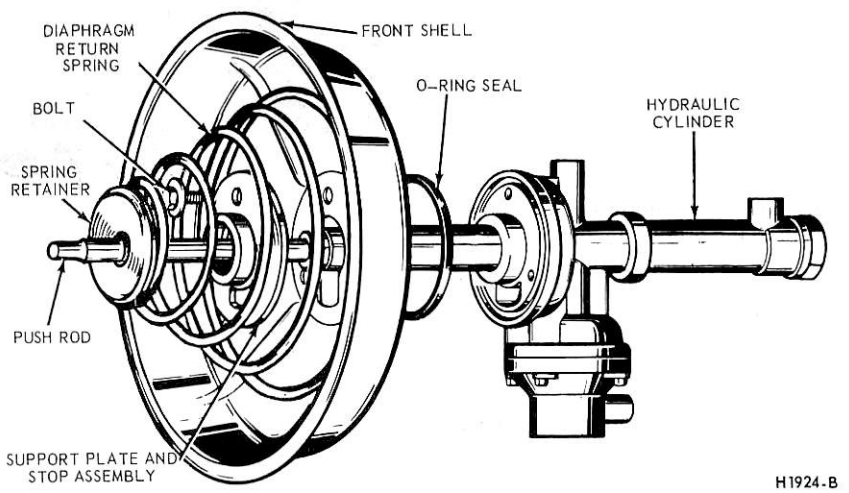

FIG. 4 Support Plate and Front Shell Removed

14. Install the residual pressure check valve in the end fitting. Then, assemble the check valve spring and washer in the end fitting and secure them with the snap ring.
15. Assemble the gasket on the end fitting and screw the fitting into the end of the hydraulic cylinder. Tighten the end fitting to 50-85 ft-lbs.
16. Position the ring seal in its groove around the flange of the hydraulic cylinder (Fig. 4).
17. Slide the small diameter end of the diaphragm return spring over the piston end of the hydraulic push rod.

Wet the hydraulic cylinder bore and hydraulic piston with clean brake fluid.

18. With the small coil of return spring bottomed against the spring retainer on the push rod, place the large coil of the spring inside the front shell with the hydraulic piston through the hole in the shell.
19. Compress the return spring slightly and guide the hydraulic piston, seal retainer, push rod cup, and push rod bearing into the cylinder bore. Seat the hydraulic cylinder flange against the front shell with the ring seal in place. Position the support plate and stop assembly on the other side of the shell and install the three bolts that secure the stop assembly and front shell to the hydraulic cylinder. Release pressure on the spring.
20. Lightly coat both sides of the beads of front and rear diaphragms with talcum powder or a silicon lubricant.
21. Guide the rear shaft onto the push rod and align the scribe marks on the shell flanges next to the front diaphragm. Press the shells together to seat the bead of the front diaphragm in the shell flanges all the way around.
22. Assemble the clamping ring on the shell flanges with scribe marks aligned and secure it with the screw and nut. Tap the ring lightly with a rawhide hammer while tightening the screw and nut to 30-40 in-lbs.
23. Press the rear shells together with the shells aligned to the scribe marks and the bead of the rear diaphragm in the shell flanges all the way around. Assemble the clamping ring on the shell flanges with the scribe marks aligned and secure it with the screw and nut. Tap the ring and tighten as in Step 22.
24. Attach the hose tee to the control tube on the rear shell and to the hose nipple on the center shells using hose clamps.
25. Assemble the ring seal on the end of the control tube and nut assembly and attach the tube to the hose tee with a hose clamp. Screw the tube nut into the control valve port. Tighten the tube nut to 80-120 in-lbs.
26. If removed, assemble the pipe plug in the rear shell and tighten it to 12-20 ft-lbs. If the bleeder screws were removed, assemble the screws in the hydraulic cylinder and tighten them to 10-15 ft-lbs. **The tube seat inserts in the input and output hydraulic ports should not be removed except to replace a damaged tube seat.**

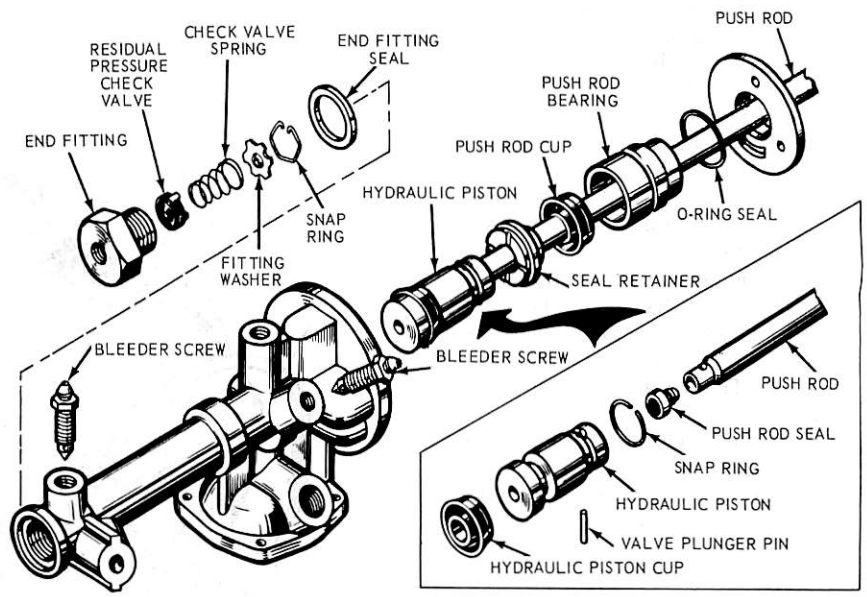

FIG. 5 Hydraulic Cylinder — Disassembled

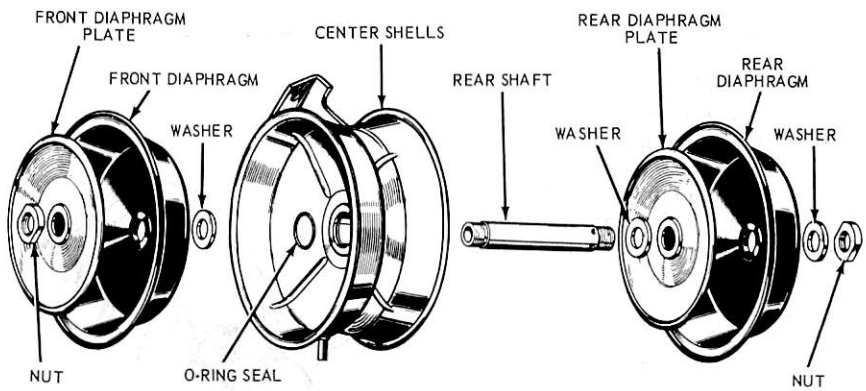

FIG. 6 Push Rod and Diaphragms — Disassembled

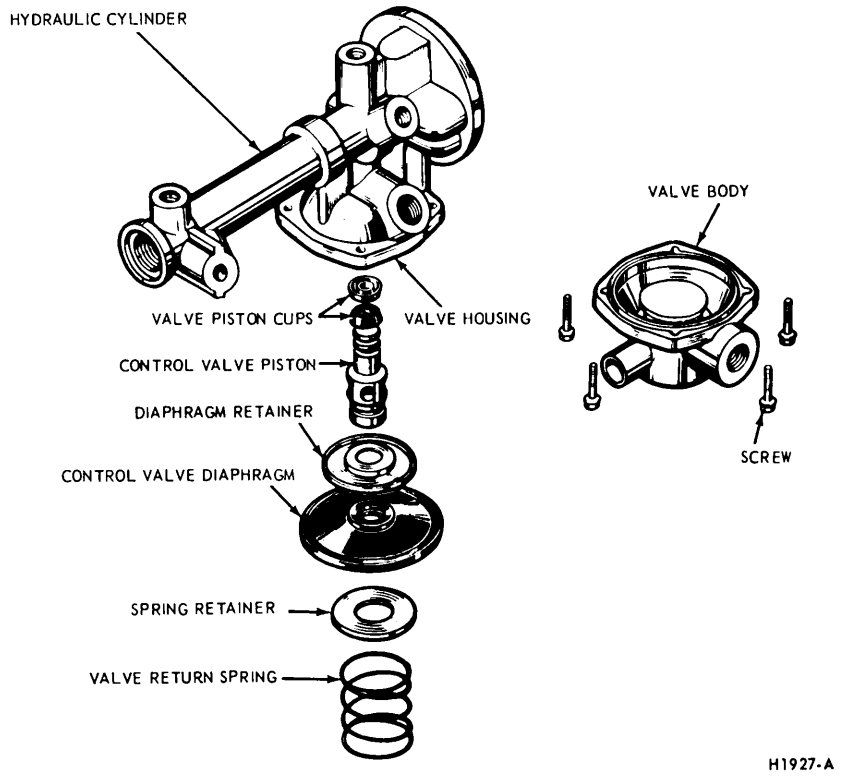

FIG. 7 Control Valve — Disassembled

PART 12-58 Vacuum Brake Booster — Single Diaphragm, Dash-Mounted (Midland)

Applies to F-, B-500-600 and LN-Series with Single or Split Hydraulic Brakes

COMPONENT INDEX	Page	COMPONENT INDEX	Page
BOOSTER		Removal and Installation	58-03
Air Check	58-02	PUSH ROD	
Description	58-01	Adjustment	58-02

DESCRIPTION

MIDLAND-ROSS DIAPHRAGM TYPE — DASH-MOUNTED BOOSTER

The single diaphragm type vacuum booster is a self-contained vacuum-hydraulic power braking unit. It is of the vacuum-suspended type which utilizes engine intake manifold vacuum and atmospheric pressure for its power. It consists of three basic elements combined into a single unit as shown in Fig. 1.

The three basic elements are:

1. A vacuum power chamber which consists of a front and a rear shell, a diaphragm, a diaphragm plate, a hydraulic push rod and a vacuum diaphragm return spring.
2. A mechanically-actuated control valve, integral with the vacuum power diaphragm, which controls the degree of power brake application or release in accordance with the foot pressure applied to the valve operating rod through the brake pedal linkage.
3. A hydraulic dual, or single, master cylinder, which supplies hydraulic pressure to the brake system (Figs. 2 and 3).

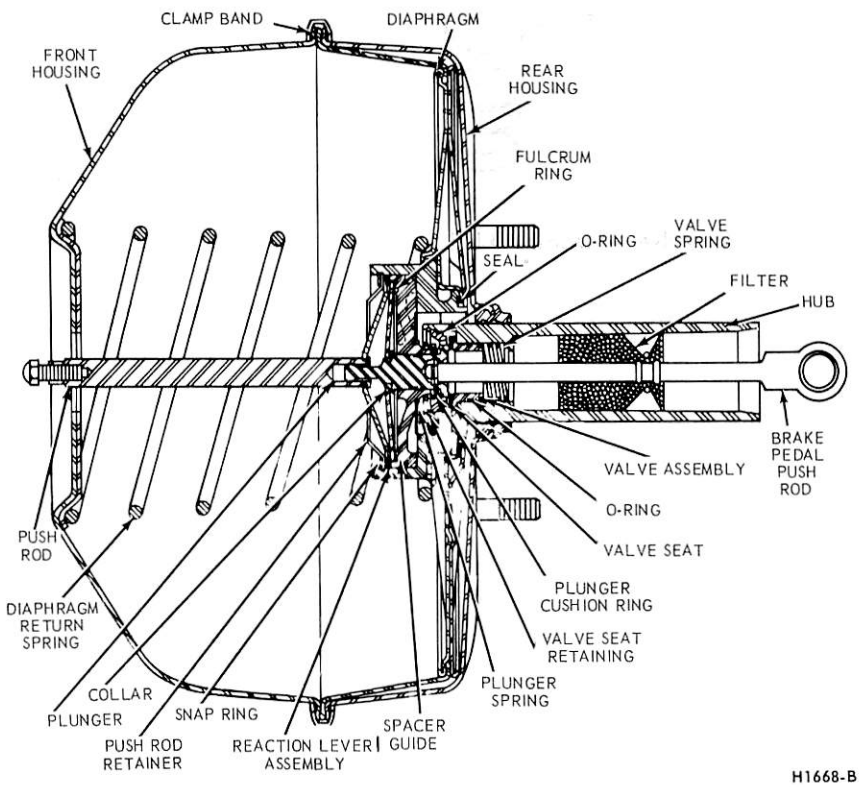

FIG. 1 Midland-Ross Dash-Mounted Booster

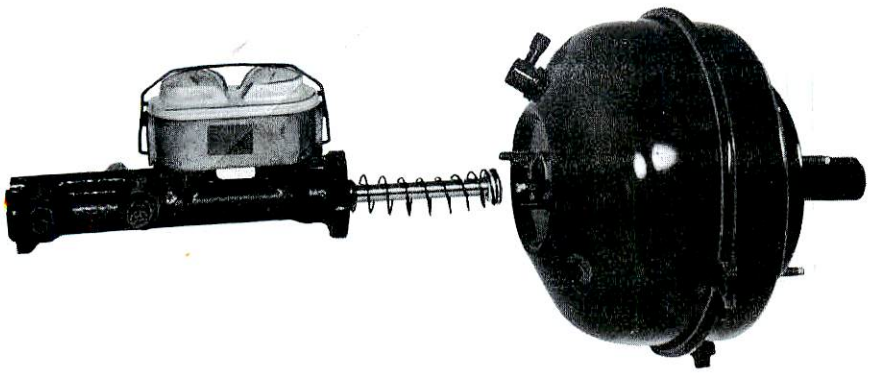

H1983-A

FIG. 2 Booster with Dual Master Cylinder (Split System)

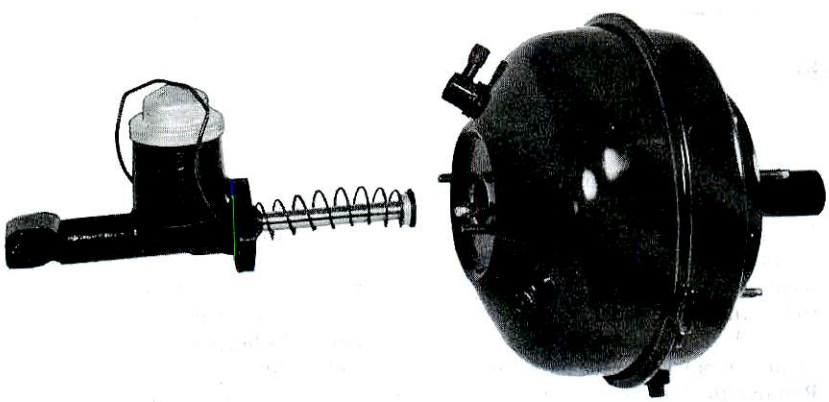

H1984-A

FIG. 3 Booster with Single Master Cylinder (Single System)

ADJUSTMENTS

PUSH ROD

The push rod is provided with an adjustment screw to maintain the correct relationship between the booster control valve plunger and the master cylinder piston. If the plunger is too long, it will prevent the master cylinder piston from completely releasing hydraulic pressure and can cause the brakes to drag. If the plunger is too short, it will result in excessive pedal travel and an undesirable clunk in the booster area. Remove the master cylinder for access to the booster push rod.

To check the adjustment of the screw, fabricate a gauge of the dimensions shown in Fig. 2. Then place the gauge against the master cylinder mounting surface of the booster body as shown in Fig. 4. The push rod screw should be adjusted so that the end of the screw just touches the inner edge of the slot in the gauge.

Air Check

Whenever the master cylinder or booster has been repaired or replaced, the brake system must be checked for proper return flow of hydraulic brake fluid from the wheel cylinders to the reservoir of the master cylinder. This check will assure that the brake booster to master cylinder push rod is properly adjusted to allow the master cylinder compensating valve to open when the brake pedal is in the fully-released position.

The air check is made after the brake booster and master cylinder has been installed and before the master cylinder hydraulic line connection is made and the reservoir is filled with brake fluid.

1. Connect the brake vacuum line to the vacuum booster, if required. Start the engine.
2. Carefully position the nozzle of an air hose to the master cylinder discharge port. Place a hand over the master cylinder reservoir and apply air pressure through the air hose nozzle.

Be careful not to allow dirt to enter into the system.

If free passage air pressure is felt on the hand located over the master cylinder reservoir, the brake booster

push rod is properly adjusted.

If no air pressure is felt on the hand located over the reservoir, the master cylinder must be removed and the push rod length shortened. To shorten the push rod length, turn the acorn-type screw on the brake booster push rod inward, one turn at a time, until the air check shows the brake master cylinder compensating valve is open.

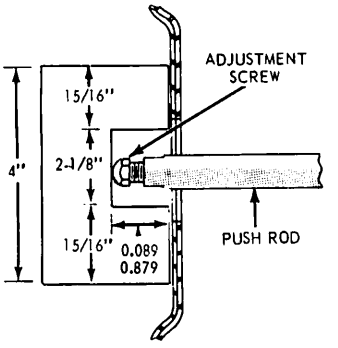

H1665-B

FIG. 4 Push Rod Gauge Dimensions and Adjustment

REMOVAL AND INSTALLATION

MIDLAND DIAPHRAGM-TYPE DASH-MOUNTED BOOSTER

The brake booster is serviced as an assembly only.

Removal

1. Support the master cylinder with a prop from the underside.
2. Remove the master cylinder-to-booster attaching nuts.
3. Remove the clip that retains the master cylinder outlet line to the bracket on the dash panel.
4. Loosen the clamp that secures the manifold vacuum hose to the booster and remove the hose. Remove the reservoir hose from the booster unit, if so equipped.
5. Pull the master cylinder off the booster, and leave it supported by the prop far enough away to allow removal of the booster assembly.
6. From inside the cab, remove the eccentric bolt and lock nut that secure the booster valve operating rod to the brake pedal. Remove the nuts that retain the booster mounting bracket to the dash panel.
7. Remove the booster assembly from the engine compartment.

Installation

1. Mount the booster and bracket assembly to the engine side of the dash panel by sliding the bracket mounting studs and of the valve operating rod in through the holes in the dash panel.
2. From inside the cab, install the booster mounting bracket-to-dash panel attaching nuts.
3. Check the push rod adjustment as described in this part.
4. Position the master cylinder to the booster assembly, install the retaining nuts, and remove the prop.
5. Position the master cylinder outlet line to the bracket on the dash panel, and install the retaining clip.
6. Connect the manifold vacuum hose to the booster and secure with the clamp. Connect the reservoir hose to the booster if so equipped.
7. From inside the cab, connect the booster valve operating rod to the brake pedal with the eccentric bolt and lock nut. Adjust the brake pedal free travel as described in Part 12-02.
8. Start the engine and check the operation of the brake system.

PART 12-60 Vacuum Brake Booster — Single Diaphragm, Frame-Mounted (Midland)

Applies to P-500 Series Trucks

COMPONENT INDEX	Page	COMPONENT INDEX	Page
BOOSTER		BOOSTER - Continued	
Description	60-01	Removal and Installation	60-02
Disassembly and Assembly	60-02		

DESCRIPTION

MIDLAND (HI-POWER) DIAPHRAGM TYPE-FRAME MOUNTED BOOSTER

The frame-mounted diaphragm type vacuum booster consists of a vacuum chamber, a hydraulically actuated vacuum control valve, and a hydraulic cylinder, all in a single sealed unit (Fig. 1).

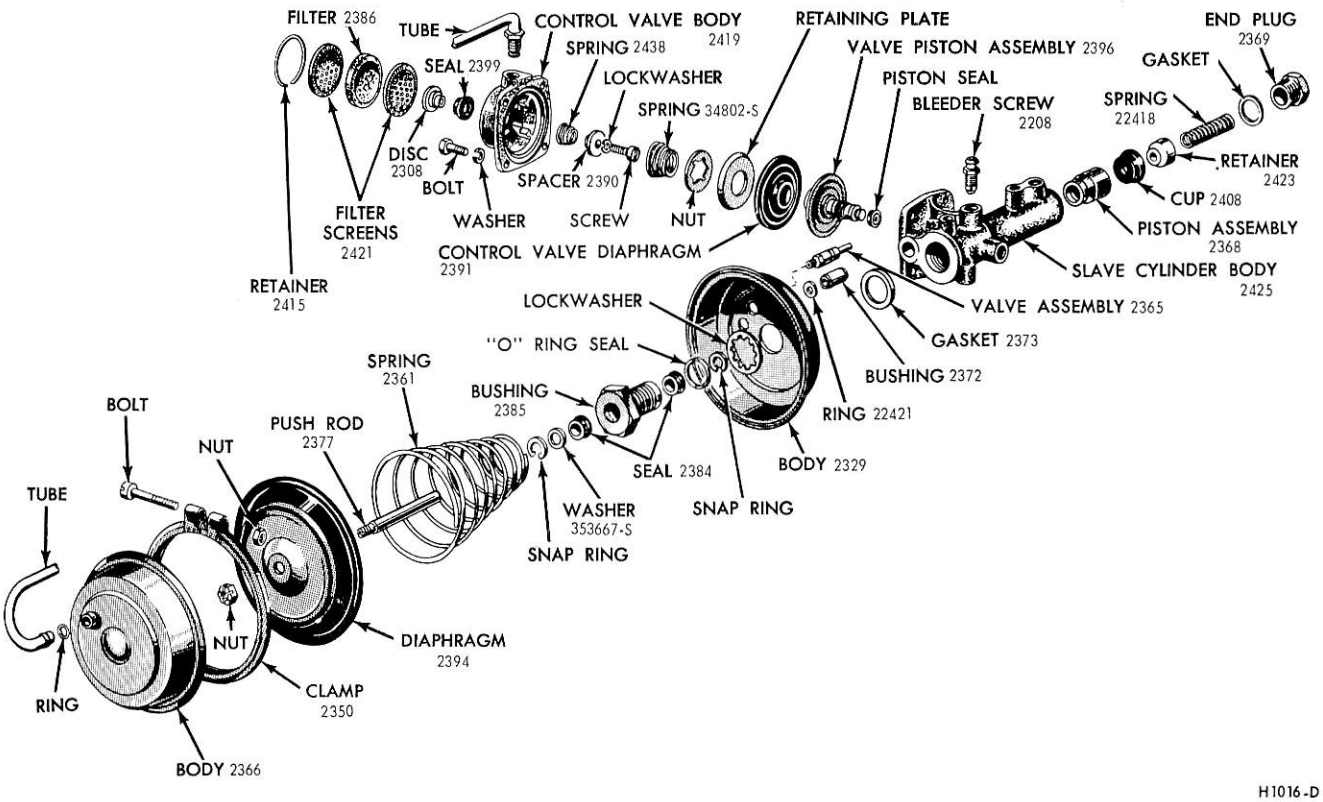

FIG. 1 Midland Hi-Power Vacuum Booster — Disassembled

REMOVAL AND INSTALLATION

Removal

1. With the engine stopped, depress the brake pedal several times to remove all vacuum from the booster system.
2. Disconnect the 2 hydraulic lines and vacuum hose from the booster.
3. Loosen the air breather hose clamp and disconnect the hose from the booster.
4. Remove the 3 mounting bolts and lockwashers and remove the booster.

Do not remove the breather or the vacuum check valve unless operating conditions indicate repairs are necessary.

Installation

1. Position the booster on the mounting bracket, and install the mounting bolts, using new lockwashers.
2. Connect the hydraulic lines to the booster. Tighten connections securely.
3. Connect the air intake hose to the control valve air inlet tube. Tighten the hose clamp securely. If necessary, clean the air inlet element.
4. Bleed the brake system as outlined under Hydraulic System Bleeding Part 12-01.
5. Connect the vacuum hose to the vacuum check valve (or tube) on the booster. Tighten the clamps securely.
6. Perform the checks and tests as outlined in Part 12-01.

OVERHAUL

MIDLAND (HI-POWER) BOOSTER

Disassembly

1. Remove the by-pass tube from both the control valve body and the rear body (Fig. 1).
2. Mark both halves of the diaphragm body with a scriber. Mark the flanges of the control valve body and the slave cylinder body so the parts can be assembled in their original positions.
3. Carefully remove the body clamp. Then, remove the rear body and the diaphragm with the return spring.
4. Remove the push rod, spring retainer and collar from the coils of the return spring.
5. Remove the valve body cover and gasket. Scribe a line on the side of the valve body cover and valve body.
6. Remove the valve body, spring, and the piston and diaphragm assembly from the slave cylinder body.
7. Remove the end plug, copper gasket, spring (and spring seat, on frame-mounted units) and spring retainer from the end of the slave cylinder.
8. Remove the piston cup and hydraulic piston assembly from the cylinder. If the assembly does not fall free of the cylinder bore, it may be pushed out by inserting the push rod in the bushing.
9. Remove the check valve retainer, check valve and return spring from the hydraulic piston.
10. Mount the slave cylinder body in a vise, and remove the push rod bushing, lockwasher, and front body from the slave cylinder body.
11. Remove the gasket, rubber seal, and transfer bushing from the slave cylinder body. Remove the 2 push rod bushing snap rings, and remove the washer and 2 seals from the bushing. Remove the O-ring seal from the outside diameter of the push rod bushing.
12. Remove the seal from the lower end of the control valve piston. Remove the seal from the piston boss.
13. Remove the retainer nut from the piston boss by prying the inner tangs of the nut away from the boss, and remove the diaphragm plate and control valve diaphragm.
14. Remove the screw, lock washer, spacer, spring, disc, and seal from the control valve body.

Assembly

1. Position a new seal in the control valve body. Assemble the spring and spacer in the valve body and secure with the screw and lockwasher. Tighten the screw securely.
2. Position the control valve diaphragm and plate and secure it in place with the attaching nut.
3. Install the control valve piston seal on the piston.
4. Insert the check valve spring, valve, and retainer in the hydraulic piston. Be sure the check valve floats freely and does not bind in the bore.
5. Install the transfer bushing, rubber seal, and gasket on the front body end of the slave cylinder body.
6. Install the push rod seals, washer, and snap rings in the push rod bushing. Both push rod seals should be installed with the open end of the seal facing the slave cylinder body. Install the lockwasher over the end of the bushing. Install the bushing seal.
7. Mount the slave cylinder body in a vise. Position the front body over the end of the slave cylinder, inserting the transfer bushing with proper hole in the front body.
8. Thread the push rod bushing in place. Be sure the front body seats squarely on the slave cylinder body, and tighten the bushing securely.
9. Coat the piston bores in the slaves cylinder body with brake fluid. Dip the hydraulic cylinder piston, seals, spring retainer, and spring in the brake fluid.
10. Install the hydraulic piston in the slave cylinder bore with the recessed end (or the large bore of the piston) toward the push rod bushing. Carefully position the piston cup with the recessed end toward the large spring, spring retainer, and spring on top of the piston.

On a frame-mounted booster, install the spring seat in the spring coils.

11. Position a new copper gasket on the end plug and screw the plug in the slave cylinder. Tighten the end plug securely.
12. Dip the control valve piston and diaphragm in the brake fluid. Position the control valve spring on the diaphragm with the small end of the spring over the piston boss.
13. Position the control valve body over the spring, align the scribe marks, install the valve body on the slave cylinder body and secure with 4 attaching bolts and lockwashers. Tighten the bolts securely.
14. Position a new gasket on the control valve body, position the valve body cover over the gasket and secure the cover with 4 bolts and lockwashers. Tighten the bolts securely.
15. Position the collar over the threaded end of the push rod. Position the spring retainer in the spring as shown in the insert in Fig. 1. Insert

the push rod and collar in the coils of the spring and through the retainer. Position the diaphragm over the threaded end of the push rod and secure it with the push rod nut. Tighten the nut securely. After the nut is tightened coat the threads of the push rod with shellac to prevent leakage. Coat the push rod with brake fluid.

16. Place the return spring over the push rod bushing.
17. Place the rear body on top of the diaphragm with the scribe mark on the rear body in alignment with that on the front body. Compress the return spring, and install and tighten the clamp, making certain the diaphragm bead is properly positioned between the 2 halves of the body.
18. Install the by-pass tube.

PART 12-70 Parking Brake—Cable Actuated, Rear Wheels

Applies To Bronco, E-100-300; F-100-350 Series Truck

COMPONENT INDEX	Page	COMPONENT INDEX	Page
ADJUSTMENT	70-03	PARKING BRAKE EQUALIZER TO CONTROL ASSEMBLY CABLE Removal and Installation	70-06
DESCRIPTION	70-01	PARKING BRAKE EQUALIZER TO REAR WHEEL CABLE Removal and Installation	70-07
PARKING BRAKE CONTROL Removal and Installation	70-04		

DESCRIPTION

CABLE ACTUATED REAR WHEEL PARKING BRAKE

On F-100, F-250, F-350, E-100, E-200, E-300 and Bronco models, a cable actuated parking brake assembly is contained in each rear wheel brake assembly (Figs. 1 and 2).

On the F-100, F-250, F-350, E-100, E-200, E-300 and Bronco models, the manually operated parking brake lever cable is routed to the equalizer lever (Figs. 3, 4, 5, 6, 7 and 8), which through the equalizer assembly and brake cables connects to the parking brake lever assembly in each rear wheel.

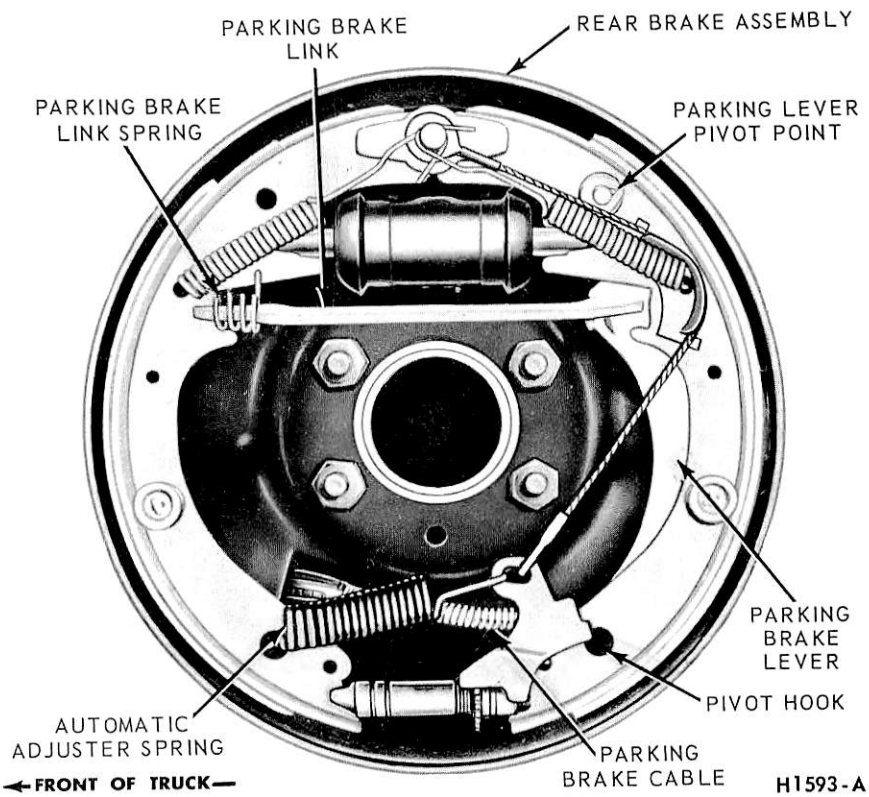

FIG. 1 Parking Brake Assembly—Cable Operated— F-100-250, E-100-200 and Bronco

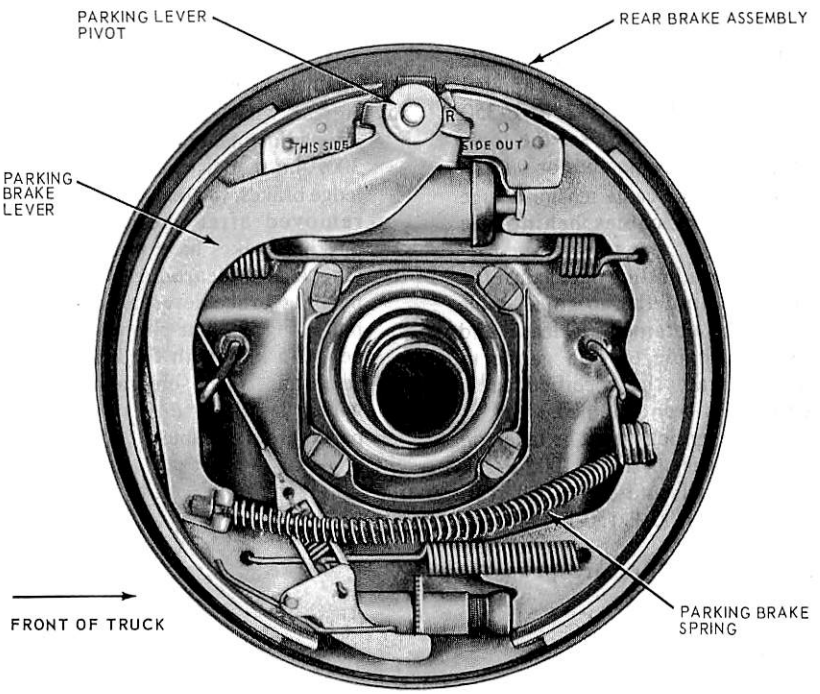

FIG. 2 Parking Brake Assembly—Cable Operated—(E-300, F-250-350)

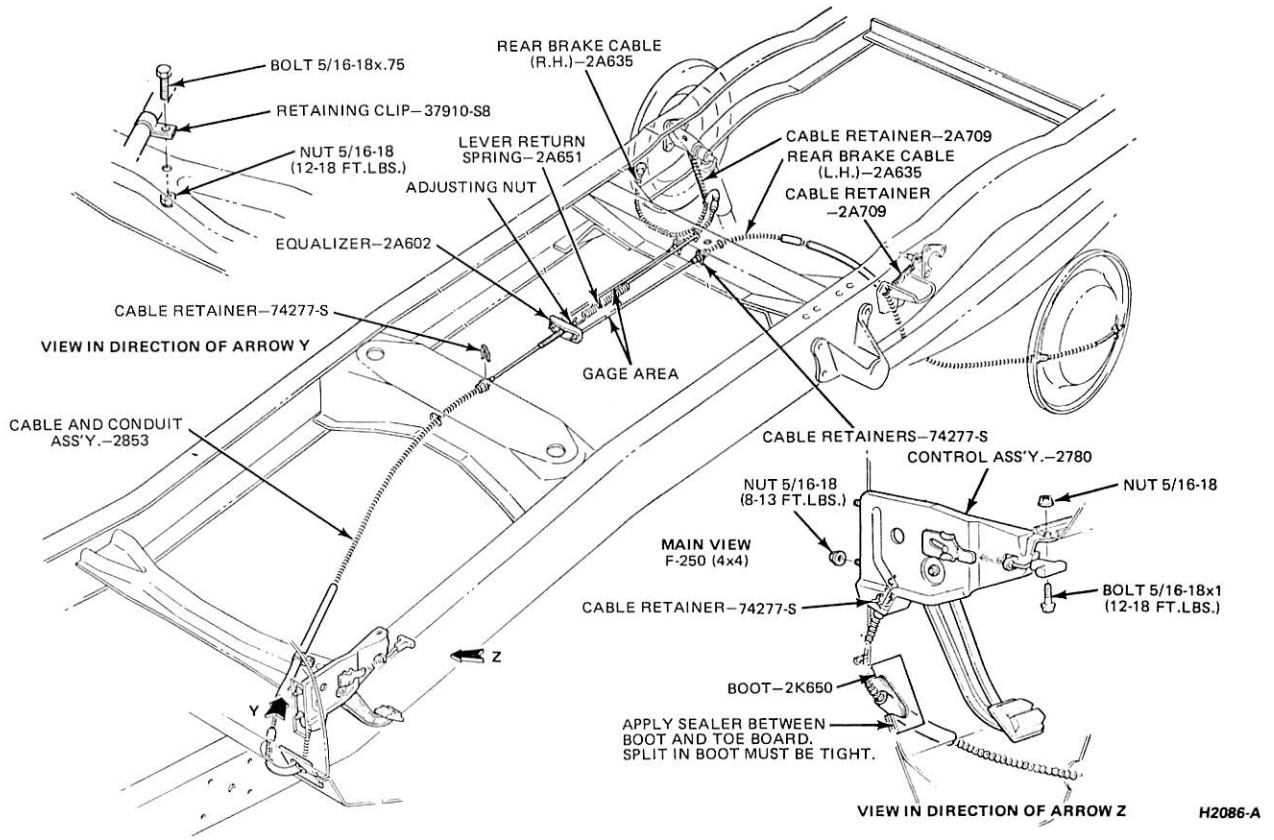

FIG. 3 Parking Brake System—F-250 (4 x 4)

ADJUSTMENT

CABLE ACTUATED REAR WHEEL PARKING BRAKE

Adjust the service brakes before attempting to adjust the parking brake cables.

Place the parking brake lever in the fully released position, then check the slack in the parking brake two rear cables.

The cables should be tight enough to provide full application of the rear brake shoes, when the parking brake lever or foot pedal is placed in the fully applied position, yet loose enough to ensure complete release of the brake shoes when the lever is in the released position.

If the cables are loose, adjust them as follows:

1. Set the parking brake control handle (if applicable) in the fully applied position. On F-100, F-250, F-350 and Bronco o models set the foot-350 pedal at two notches or clicks.
2. Attach a brake cable tension gauge to the brake cables behind the equalizer.
3. Tighten the adjusting nut against the equalizer until the specified cable tension is obtained. Release and reset the cable tension gauge to make certain the specified cable tension has been obtained.

   The cable tensions **must** be taken on **both rear cables** on the E-100, E-200 and E-300 models and on the left rear cable only for F-100, F-150, F-350, and Bronco models.
4. When the cables are properly adjusted, tighten the lock nut against the equalizer.
5. If rear wheel brake drag is noted after adjustment on F-250, F-350, E-300, and models equipped with web ledge brakes, the rear drums must be removed after the service and parking brakes have been adjusted. Check the clearance betweenthe parking brake lever and the cam plate (Fig. 9). The clearance should be 0.015 inch with the brakes fully released. If the clearance is not within specifications, readjust the parking brake cable.

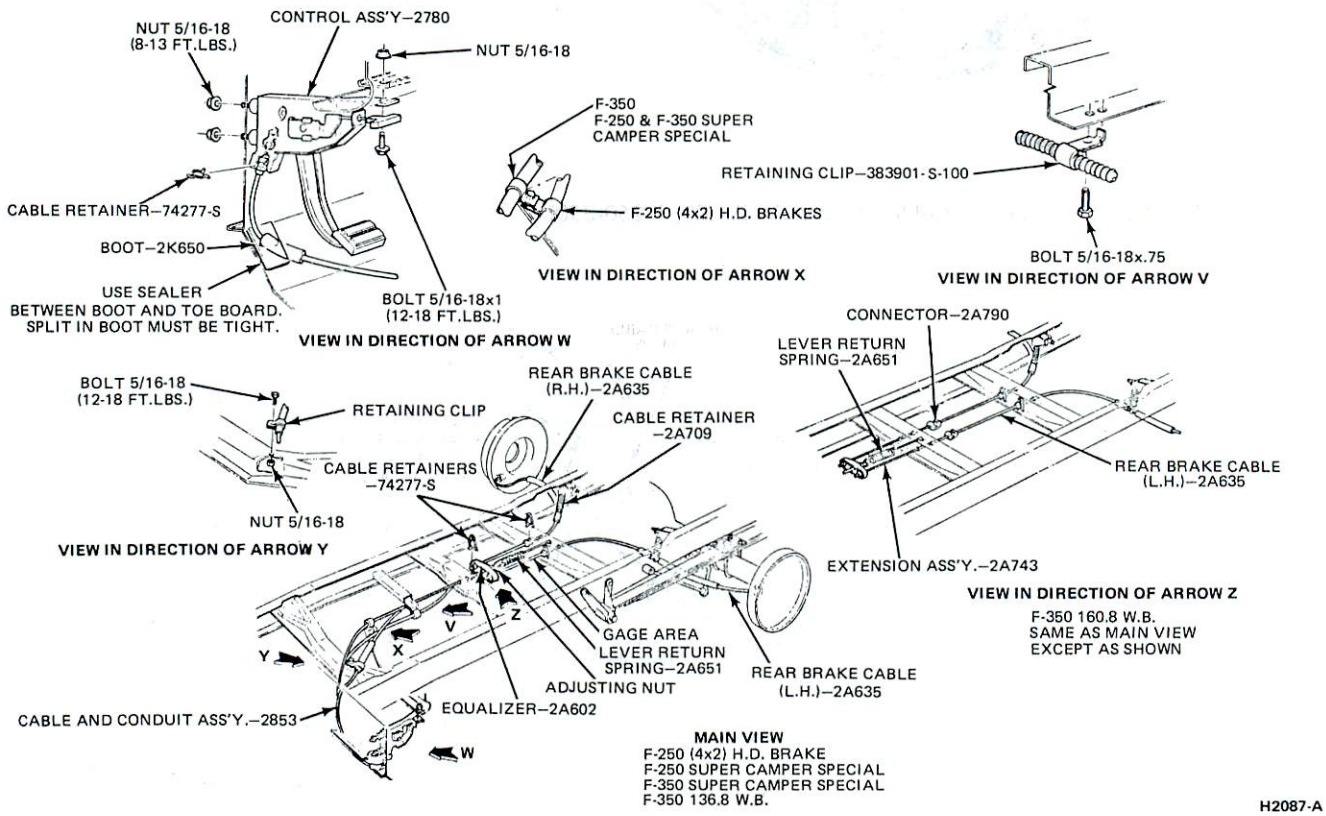

FIG. 4 Parking Brake System—F-250 (4 x 2), F-350

REMOVAL AND INSTALLATION

PARKING BRAKE CONTROL

F-100-350 SERIES

Removal

1. Loosen the adjusting nut at the equalizer (Fig. 3, 4 and 5).
2. Working under the left front fender, remove the two nuts attaching the parking brake control assembly to the dash panel.
3. Working under the instrument panel, remove the bolt and nut attaching the control assembly to the lower flange of the instrument panel.
4. Remove the forward ball end of the parking brake cable from the control assembly clevis. Remove the hair pin retainer retaining the cable assembly to the control and remove the control.

Installation

1. Connect the forward ball end of the parking brake cable to the clevis of the control assembly and install the cable assembly to control retainer.
2. Position the control assembly to the lower flange of the instrument panel and install the attaching bolt and nut.
3. Working under the left front fender, install and tighten the two nuts attaching the parking brake control assembly to the dash panel.
4. Adjust the parking brake equalizer lever to its original position. Check cable tension and adjust the parking brake, if necessary, following the instructions given in Parking Brake Adjustment.

BRONCO

Removal

1. Loosen the adjusting nut at the equalizer (Fig. 6).
2. Open the hood and remove the two nuts attaching the parking brake control assembly to the dash panel.
3. Working under the instrument panel, remove the bolt and nut attaching the control assembly to the lower flange of the instrument panel.
4. Remove the forward ball end of the parking brake cable from the control assembly clevis and remove the control.

Installation

1. Connect the forward ball end of the parking brake cable to the clevis of the control assembly.
2. Position the control assembly to the lower flange of the instrument panel and install the attaching bolt and nut.
3. Working in the engine compartment, install and tighten the two nuts attaching the parking brake control assembly to the dash panel. Lower the hood.
4. Adjust the parking brake equalizer lever to its original position. Check cable tension and adjust the parking brake, if necessary, following the instructions given in Parking Brake Adjustment.

ECONOLINE

Removal

Refer to Figures 7 and 8.

1. Push the equalizer lever slightly forward, and disconnect the ball end of the cable from the equalizer lever.
2. Remove the bolts retaining the parking brake handle assembly to

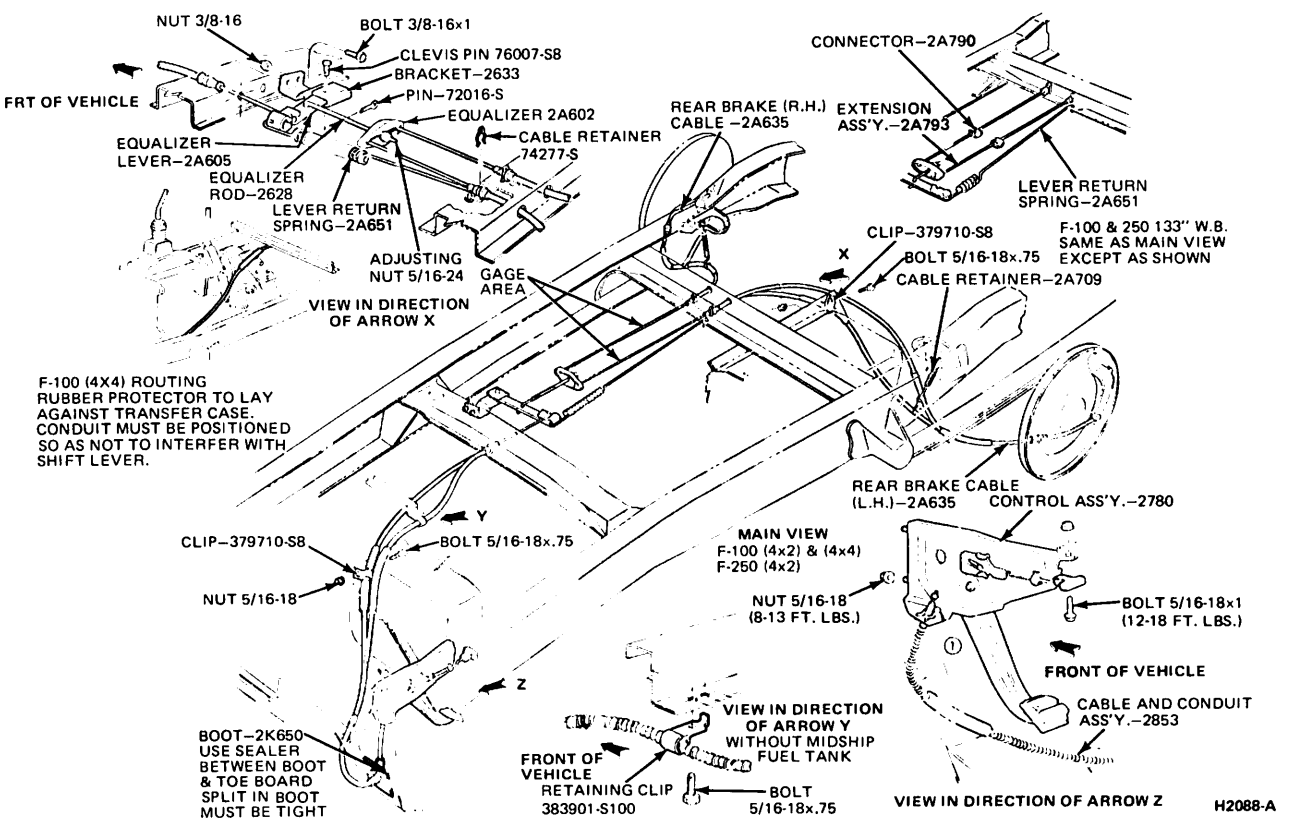

FIG. 5 Parking Brake System—F-100, F-250

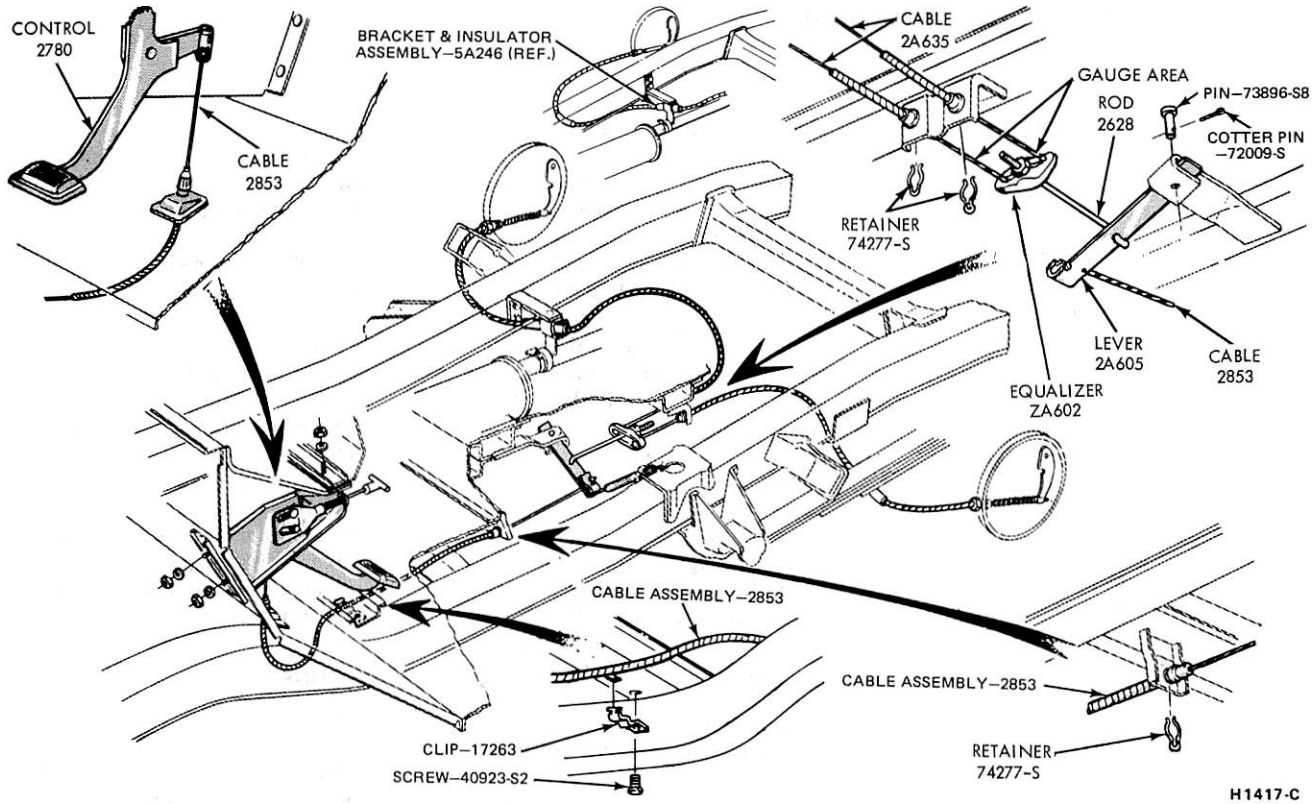

FIG. 6 Parking Brake System—Bronco

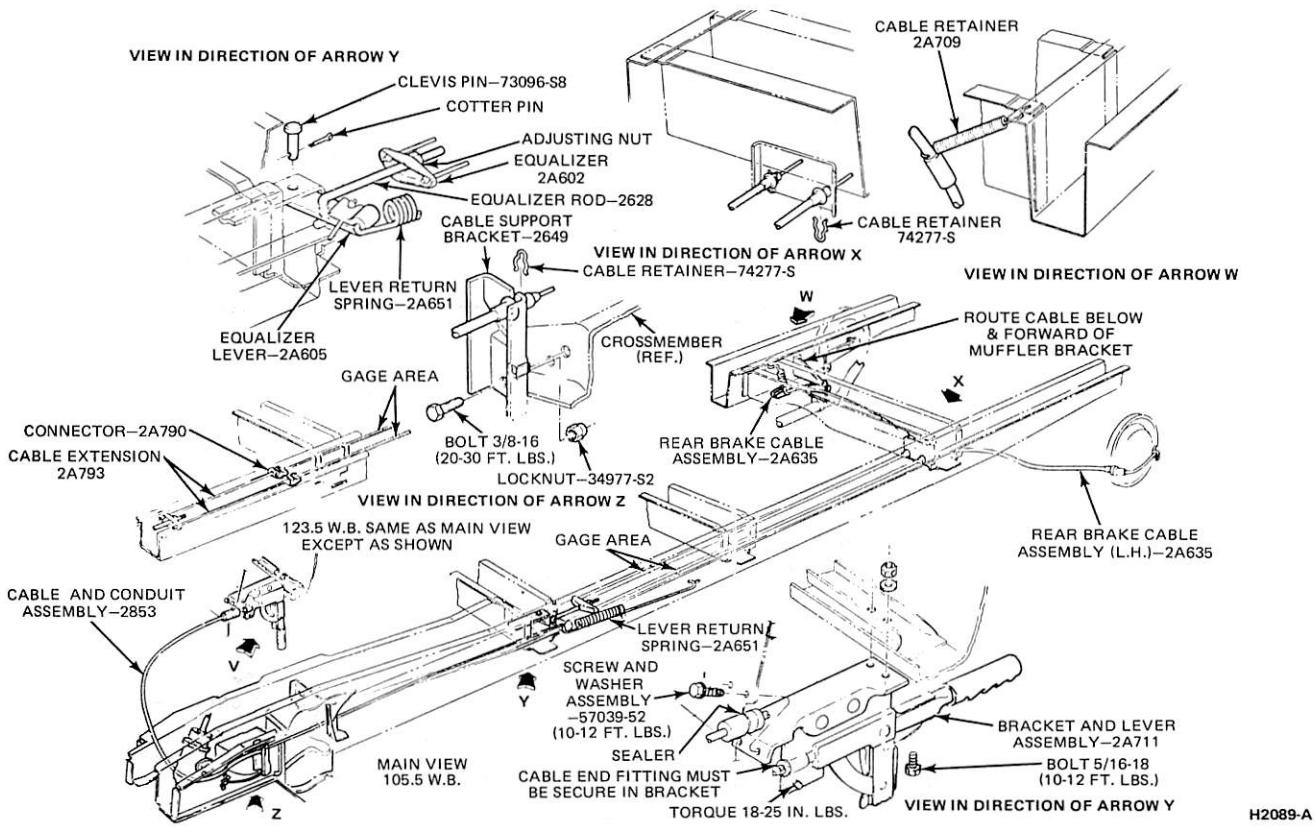

FIG. 7 Parking Brake System—E-100, E-200

the dash panel and instrument panel. Remove the handle assembly.

Installation

1. Position the parking brake handle assembly under the instrument panel and install the bolts retaining the handle to the dash panel and instrument panel.
2. Push the equalizer lever slightly forward, and insert the ball end of the cable in the slot on the equalizer lever.
3. Adjust the parking brakes.

PARKING BRAKE EQUALIZER TO CONTROL ASSEMBLY CABLE

Removal

1. Raise tvehicle on a hoist. Push the equalizer lever slightly forward, and disconnect the cable rear (ball) end from the lever.
2. Remove the parking brake cable retaining U-clip at the crossmember.
3. Lower the vehicle, open the hood, and remove the cable retaining clamp on the fender apron.
4. Remove the cable retaining U-clip at the handle assembly. Remove the cable from the vehicle.

On F-100 through F-350 vehicles it will be necessary to remove the access cover located on the body left front mounting reinforcement. With the use of a fish-wire or cord attached to the control lever end of the cable, remove the cable from the vehicle.

Installation

1. Position the new cable through the dash panel and connect it to the parking brake handle assembly. Secure the cable to the handle assembly with the U-clip. On an F-100 through F-350 vehicle, transfer the fish-wire or cord to the new cable. Position the cable to the vehicle, routing the cable through the dash panel and through the crossmember. Remove the fish-wire and secure the cable to the control with the retaining clip.
2. Install the cable retaining clamp to the fender apron, and raise the vehicle on a hoist.
3. Route the cable through the crossmember(s) and secure in place with the U-clip(s).
4. Push the equalizer lever forward and connect the cable rear (ball) end to the lever. Adjust the parking brake cable at the equalizer assembly.

On a F-100 through F-350 vehicle, install the access cover on the body left-front mounting reinforcement.

BRONCO

Removal

1. Raise the vehicle on a hoist.
2. Loosen the adjusting nut at the equalizer assembly (Fig. 5) and remove ball end of the brake control to equalizer cable from the equalizer arm. Remove the clip retaining the cable housing to the bracket.
3. Lower the vehicle.
4. From inside of vehicle, disconnect the cable at the parking brake control clevis.
5. Raise the vehicle on a hoist.
6. Pull the parking brake control to equalizer cable through the hole in the dash panel and remove it from the vehicle.

Installation

1. Position the parking brake control to equalizer cable upward through the hole in the dash panel. Position the cable to the mounting bracket.
2. Lower the vehicle.
3. Connect the cable to the parking brake control clevis.
4. Raise the vehicle on the hoist.
5. Position the cable housing to the bracket and install the retaining clip.
6. Connect the ball end of cable to the equalizer arm and install the adjusting nut.
7. Adjust the parking brakes.
8. Lower the vehicle. Check the operation of the parking brake control.

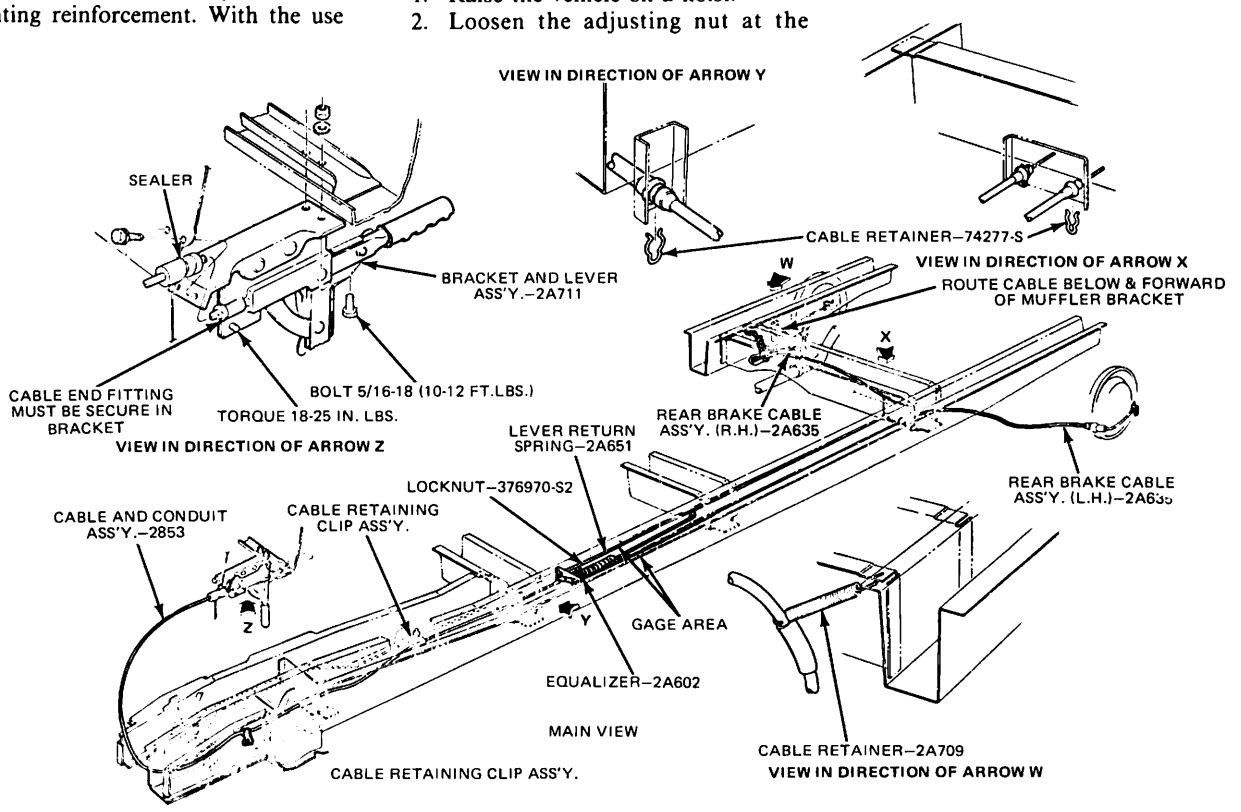

H2090-A

FIG. 8 Parking Brake System—E-300

ECONOLINE

Removal

1. Remove the parking brake handle as outlined in this section.
2. Remove the ball end of the cable from the parking brake handle.
3. Remove the cable clip at the frame crossmember below the steering gear.
4. Remove the ball end of the cable from the equalizer and remove the cable.

Installation

1. Place the cable ball in the equalizer slot.
2. Install the parking brake handle as outlined in this section.
3. Push the equalizer slightly forward and install the cable ball end in the parking brake handle.
4. Install the retaining clip at the frame crossmember below the steering gear.

PARKING BRAKE EQUALIZER TO REAR WHEEL CABLE

Removal

1. Raise the vehicle and remove the hub cap, wheel, and brake drum. Loosen the lock nut on the equalizer rod and disconnect the cable from the equalizer.
2. Remove the horseshoe-type clip that retains the cable housing to the frame bracket and pull the cable and housing out of the bracket.
3. Working on the wheel side (Fig. 1), compress the prongs on the cable retainer so that they can pass through the hole in the carrier plate. Draw the cable retainer out of the hole.
4. With the spring tension off the parking brake lever, lift the cable out of the slot in the lever, and remove the cable through the carrier plate hole.

Installation

1. Pull enough of the cable through the housing so that the end of the cable may be inserted over the slot in the parking brake lever. Pull the excess slack from the cable and insert the cable housing into the carrier plate access hole so that the retainer prongs expand.
2. Thread the front end of the cable housing through the frame bracket and install the horseshoe-type retaining clip. Insert the ball end of the cable into the equalizer and tighten the lock nut on the equalizer slightly.

If the vehicle is equipped with web ledge brakes, check the clearance between the parking brake operating lever and the cam plate (Fig. 4). The clearance should be 0.015 inch with the brakes in the fully released position.

3. Install the rear brake drum, wheel, and hub cap, then adjust the rear brake shoes.
4. Tighten the lock nut on the equalizer rod until the slack is taken out of the cables.
5. Rotate both rear wheels to make sure that the parking brakes are not dragging.

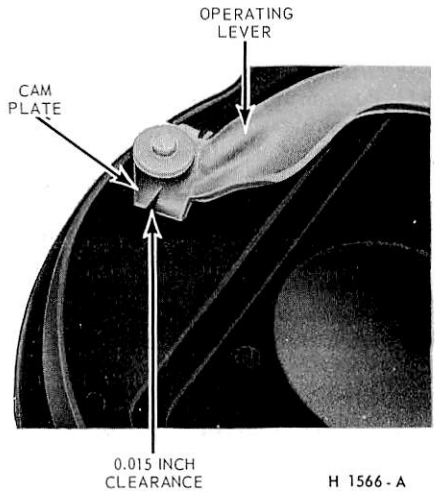

FIG. 9 Parking Brake Operating Lever and Cam (Plate Clearance-Web Ledge Brakes)

SPECIFICATIONS

PARKING BRAKE CABLE TENSION ADJUSTMENT

Model	Cable Tension ①	
	New ②	Used ③
F-100-250 (4 x 2)	160-200 lbs.	115-200 lbs.
F-250-350 with Web Ledge Brakes & F-250 4 x 4	80-120 lbs.	65-120 lbs.
E-100-200	285-325 lbs.	275-325 lbs.
E-300	210-250 lbs.	200-250 lbs.
Bronco	130-170 lbs.	115-155 lbs.

① With hand lever full on or with foot control pedal set at two notches or clicks.
② With new linings and/or new cable.
③ Whenever readjustment is required.

CH1753-C

PART 12-77 Parking Brake-External Band, Transmission Mounted

Applies To P-350, 400 and P-500 Series Trucks

COMPONENT INDEX	Page	COMPONENT INDEX	Page
BAND AND DRUM		DRUM ONLY	
Removal and Installation	77-02	Removal and Installation	77-03
BAND ONLY		DESCRIPTION	77-01
Adjustment	77-02	PARKING BRAKE LEVER	
Removal and Installation	77-03	Adjustment	77-02

DESCRIPTION

EXTERNAL CONTRACTING BAND TYPE PARKING BRAKE

The band type parking brake consists of a brake drum bolted to the transmission main shaft companion flange, and an external contracting type band mounted on the rear of the transmission (Figs. 1 and 2).

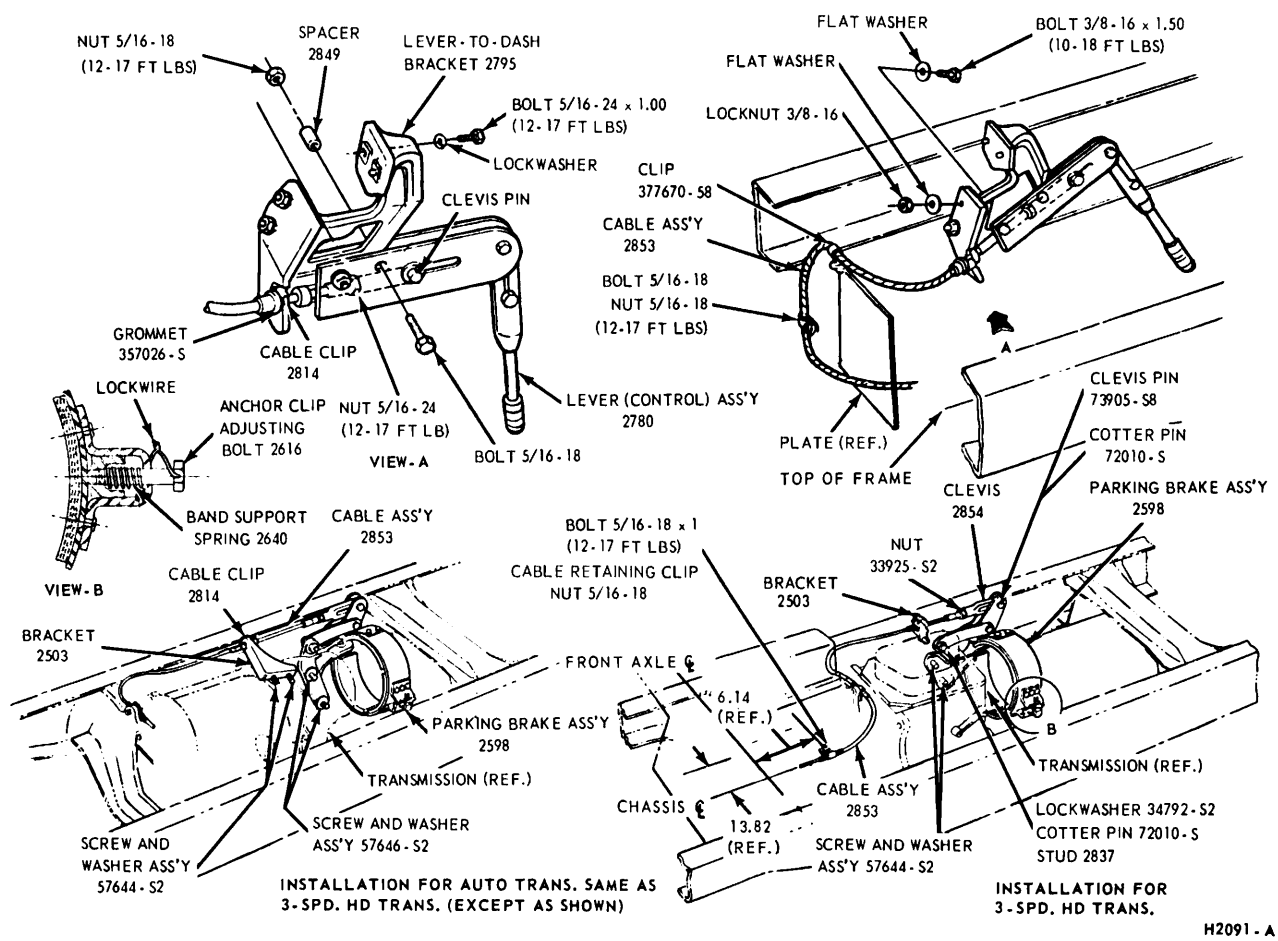

FIG. 1 External Band Type Parking Brake System

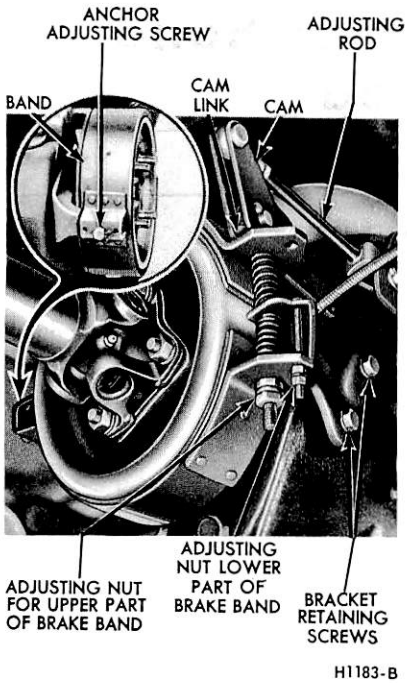

FIG. 2 External Band Adjustment

ADJUSTMENTS

PARKING BRAKE LEVER ADJUSTMENT

The orscheln parking brake (Fig. 1) is over center locking type. It is adjusted (while in the released position) by turning the lever knob. When properly adjusted, it pulls over center with a distinct click. No other adjustment is normally required.

EXTERNAL BAND ADJUSTMENT

1. On cable-controlled parking brakes (Fig. 1), move the parking brake lever to the fully released-position.
2. Check the position of the cam to make sure the flat portion is resting on the brake band bracket. If the cam is not flat with the bracket, remove the clevis pin from the upper part of the cam, and adjust the clevis rod to allow the flat portion of the cam to rest on the brake band bracket. Install the clevis pin and cotter pin (Fig. 2).
3. Remove the lock wire from the anchor adjusting screw, and turn the adjusting screw clockwise until a clearance of 0.010 inch is established between the brake lining and the brake drum at the anchor bracket. Install the lock wire in the anchor adjusting screw.
4. Loosen the lock nut on the adjusting screw for the lower half of the brake band, and adjust the screw to establish a 0.010 inch clearance between the lining and the brake drum at the lower half of the brake band (Fig. 2). Tighten the lock nut.
5. Turn the upper band adjusting rod nut until a 0.010 inch clearance is established between the upper half of the band and the drum.

REMOVAL AND INSTALLATION

BAND AND DRUM

Removal

1. Shift the transmission into low gear and disconnect the drive shaft companion flange from the transmission output shaft flange by removing the four nuts (Fig. 2).
2. Apply the parking brake, remove the transmission output shaft flange attaching nut, then release the parking brake.
3. Remove the cotter pin and clevis pin, and disconnect the adjusting rod from the cam.
4. Remove the cotter pin and clevis pin, and remove the cam link from the cam.
5. Remove the lock wire and the anchor adjusting screw.
6. Remove the brake band adjusting bolts and nuts.
7. Remove the brake bracket retaining cap screws.
8. Lift the brake band and lining assembly off the drum.
9. Inspect the brake lining, and replace it if the distance between the brake lining surfaces and the top of the rivet is less than 1/32 inch.

When relining a parking brake band, follow the procedure used in Part 12-01.

10. Inspect the drum braking surface. If the drum is rough or scored, it should be replaced. Remove the drum and output shaft flange as an assembly.

Installation

1. Position the parking brake drum and output shaft flange assembly to the transmission output shaft, and install the attaching nut.
2. Position the parking brake band assembly over the drum, and install the bracket attaching screws.
3. Install the brake band adjusting bolt and nuts and springs.
4. Connect the cam link to the lower end of the cam with clevis and cotter pin.
5. Connect the adjusting rod to the upper end of the cam with clevis and cotter pin.
6. Adjust the parking brake, and install a lock wire in the anchor adjusting screw.
7. Apply the parking brake, torque the transmission output shaft flange nut to specifications, then release the parking brake.
8. With the transmission in low gear, connect the drive shaft at the flange and torque the four attaching nuts.

BAND ONLY

Removal

Refer to Figure 2.

1. Disconnect the drive shaft from the output flange by removing the four nuts.
2. Disconnect the handbrake linkage at the cam.
3. Disconnect the cam link from the transmission case stud.
4. Remove the two bolts retaining the parking brake bracket to the transmission.
5. Remove the lock wire and remove the anchor adjusting screw.
6. Loosen the brake adjusting bolts and nuts.
7. Remove the brake shoe assembly.
8. Remove the actuating linkage and bracket from the brake band.
9. Reline the brake band as outlined in Part 12-01.

Installation

1. Install the linkage and bracket on the brake band.
2. Position the brake band with linkage and bracket to the drum and anchor.
3. Install the anchor adjusting screw.
4. Install the two bracket to transmission retaining screws.
5. Connect the cam link to the transmission case stud.
6. Connect the hand brake linkage at the cam.
7. Connect the drive shaft to the output flange and install the four nuts.
8. Adjust the parking brake.

DRUM ONLY

Removal

Refer to Figure 2.

1. Disconnect the drive shaft by removing the four nuts and lock washers at the companion flange.
2. Back off the parking brake adjustment.
3. Remove the retaining nut and remove the brake drum and output shaft flange as a unit.
4. Separate the output flange from the brake drum.

Installation

1. Position the brake drum to the output shaft flange.
2. Install the drum and flange assembly on the output shaft and install the retaining nut. Tighten the nut to specifications.
3. Position the drive shaft and install the four nuts and lock washers.
4. Adjust the parking brake.

PART 12-79 Parking Brake-Internal Shoe, Transmission Mounted

Applies To F500 Thru LTS 900-Series Trucks

COMPONENT INDEX	Page	COMPONENT INDEX	Page
DESCRIPTION	79-01	PARKING BRAKE LEVER Adjustment	79-02
NINE-INCH DIAMETER DRUM Adjustment	79-02	TWELVE-INCH DIAMETER DRUM Adjustment	79-02
Removal and Installation	79-03	Removal and Installation	79-02

DESCRIPTION

INTERNAL EXPANDING SHOE TYPE PARKING BRAKE

The internal shoe-type parking brake (Figs. 1 and 2), mounted on the transmission includes a brake drum attached to the drive shaft (or coupling shaft), two brake shoes, an actuating cam mechanism, and cable or rod-type linkage connected to a parking brake lever (Fig. 3).

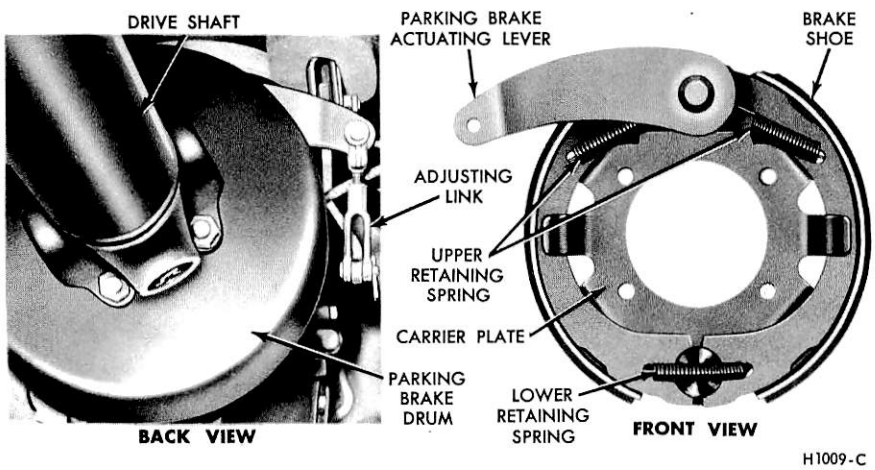

FIG. 1 Parking Brake—Transmission Mounted (9-inch Drum Shown)

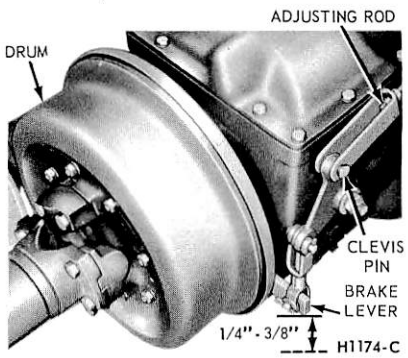

FIG. 2 Parking Brake—Transmission Mounted (12-inch Drum Shown)

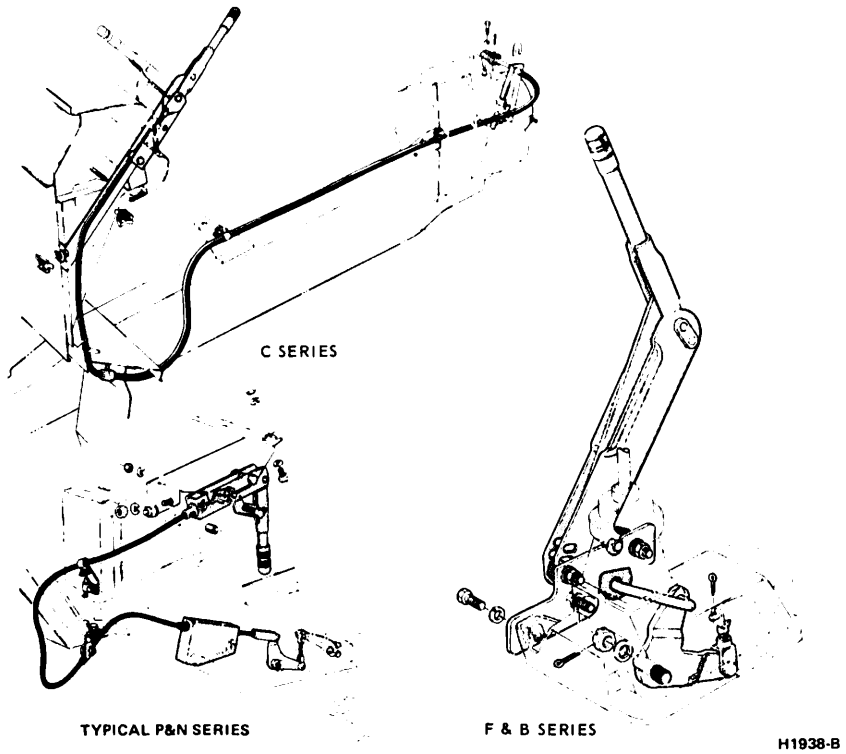

FIG. 3 Parking Brake Controls

ADJUSTMENTS

NINE-INCH DIAMETER DRUM ADJUSTMENT

1. Release the parking brake lever in the cab.
2. From under the truck, remove the cotter pin from the parking brake linkage adjusting clevis pin (Fig. 1). Remove the clevis pin.
3. Lengthen the parking brake adjusting link by turning the clevis. Continue to lengthen the adjusting link until the shoes seat against the drum when the clevis pin is installed.
4. Remove the clevis pin and shorten the linkage adjustment until there is 0.010 inch clearance between the shoes and the drum. The measurement should be taken at all points around the drum with the clevis pin installed.
5. Install a new cotter pin in the clevis retaining pin and check the brake operation.

TWELVE-INCH DIAMETER DRUM ADJUSTMENT

There is no internal adjustment on this brake. Adjustment is made on the linkage. Remove the clevis pin, loosen the nuts on the adjusting rod, and turn the clevis on the rod until a 1/4-3/8 inch free play is obtained at the brake lever (Fig. 2). Tighten the nuts, and connect the clevis to the bellcrank with the clevis pin.

PARKING BRAKE LEVER ADJUSTMENT

VEHICLES EQUIPPED WITH ORSCHELN LEVER

The Orscheln parking brake (Fig. 3) is the over center locking type. It is adjusted (while in the released position) by turning the lever knob. When properly adjusted, it pulls over center with a distinct click. No other adjustment is normally required.

REMOVAL AND INSTALLATION

INTERNAL SHOE TYPE PARKING BRAKE

Removal

1. Remove the universal joint assembly and drive shaft from the parking brake drum.
2. Remove the drum. Disconnect the parking brake actuating lever from the linkage.
3. On all transmissions except Transmatic Drive, remove the transmission spline flange. Remove the bolts retaining the carrier plate to the transmission housing. Slide the plate with the brake shoes and retaining springs from the transmission. Remove the actuating lever, shoe retaining springs, and then remove the shoes.
4. On Transmatic Drive, pry the parking brake shoe lower retaining spring from the shoes. Remove the bolts and lockwashers attaching the carrier plate to the transmission. **Do not remove the bolt that attaches the spline flange to the output shaft.**
5. With one hand on the actuating lever, slide the carrier plate away from the transmission housing and, at the same time, remove the actuating lever. Rotate the carrier plate and shoes as an assembly approximately 180 degrees, disconnect the brake shoe upper retaining springs, and remove the shoes.

Installation

If the brakes require relining, see Part 12-01 for relining procedures.

1. On all transmissions except Transmatic Drive, install the brake shoe lower retaining spring on the shoes. Position the shoes and lower retaining spring on the back side of the carrier plate, install the shoe upper retaining springs and the actuating lever. Place the assembly on the transmission and install the attaching bolts. Install the transmission spline flange.
2. On Transmatic Drive, position the brake shoe lower retaining spring in place. Lift the two shoes and spring as an assembly and place on the top back side of the carrier plate. The spring should be on the transmission side of the shoes. The carrier plate is still 180 degrees out of its normal position to facilitate the installation of the shoe upper retaining springs.
3. Install the brake shoe upper retaining springs. Rotate the carrier plate 180 degrees, position the actuating lever in the ball socket and push the carrier plate toward the transmission. **Be sure the ends of the actuating lever are properly seated. Install the lockwashers and bolts to attach the carrier plate to the transmission housing.**
4. Install the brake drum and the drive shaft.
5. Connect the actuating lever to the parking brake linkage. Check the brake operation and adjust the linkage as necessary.

PART 12-81 Parking Brake — Internal Shoe, Transfer Case Mounted

Applies To F-600 4 x 4

COMPONENT INDEX	Page	COMPONENT INDEX	Page
BRAKE LINKAGE		DRUM, SHOES AND BACKING PLATE	
Adjustment	81-03	Removal and Installation	81-03
DESCRIPTION	81-01		

DESCRIPTION

INTERNAL EXPANDING SHOE TYPE PARKING BRAKE

The internal shoe-type parking brake mounted on the transfer case includes a brake drum attached to the output shaft, two brake shoes, an actuating cam mechanism, and rod-type linkage connected to a floor mounted parking brake lever (Fig. 1).

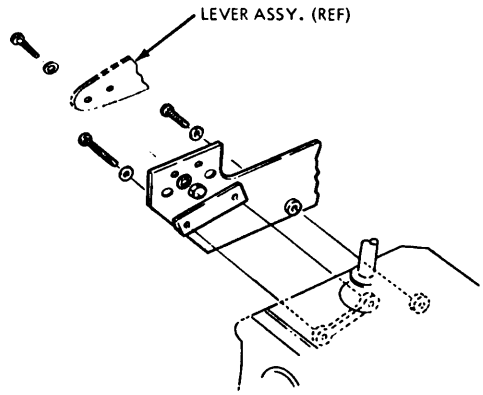

VIEW FOR CLARK 285 TRANSMISSION

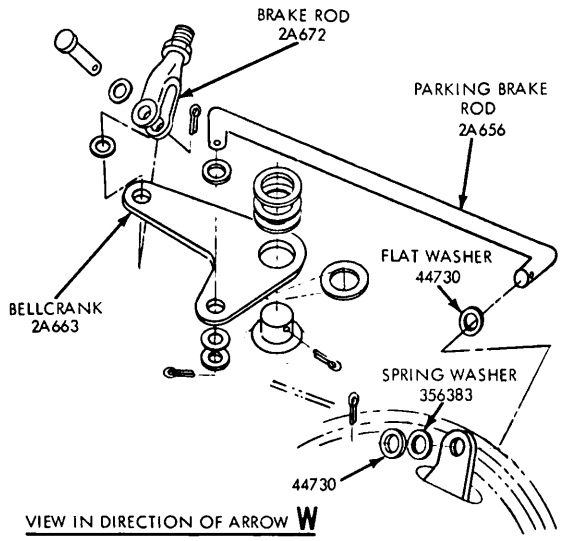

VIEW IN DIRECTION OF ARROW **W**

LOCATE BRAKE LEVER ASSY 2780 IN OFF POSITION WITH BRAKE ROD ASSY ATTACHED - REMOVE FREE PLAY IN PARKING BRAKE MOVE BELLCRANK TO ADJUST CLEVIS AND INSTALL PIN, WASHERS AND COTTER PIN.
TIGHTEN JAM NUT.

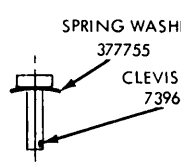

VIEW IN DIRECTION OF ARROW **V**

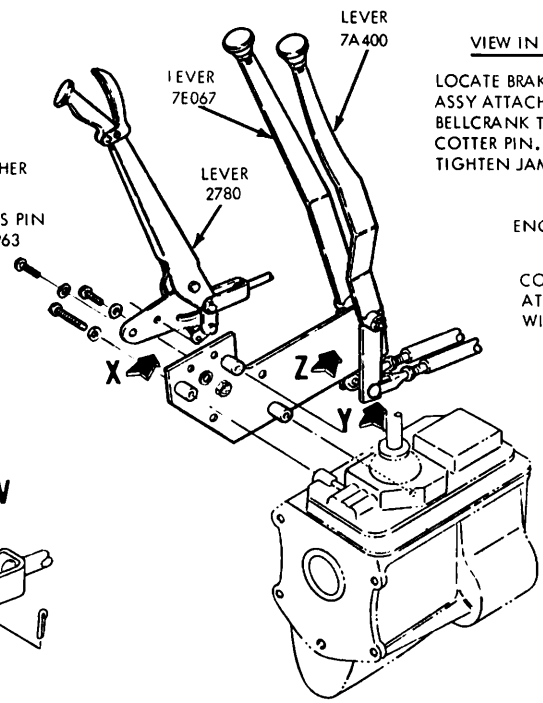

VIEW FOR WARNER T-19 TRANSMISSION

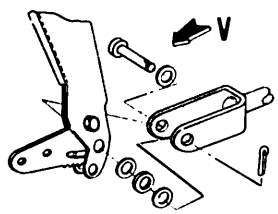

VIEW IN DIRECTION OF ARROW **X**
FOR T-19 & 285 LEVER ASSY.

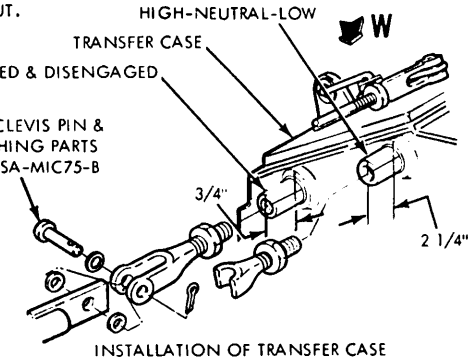

INSTALLATION OF TRANSFER CASE CONTROL LEVER ROD & SHIFT LEVER ROD (TRANSFER CASE END)

RODS ARE TO BE SET TO THESE DIMENSIONS PRIOR TO INSTALLATION	A
ENGAGED & DISENGAGED ROD	41.52
HIGH-NEUTRAL-LOW ROD	40.18

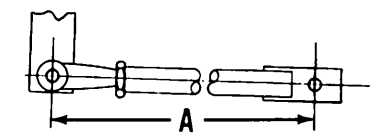

RUN JAM NUT ON EACH CLEVIS FULL THREAD. THEN INSTALL CLEVISES IN TRANSFER CASE SO THEY BOTTOM IN SHIFT RAILS. BACK OFF CLEVISES (NOT OVER 90°) SO CLEVIS PINS ARE HORIZONTAL TO GROUND AND TIGHTEN JAM NUTS.
WHEN ADJUSTING CONTROL & SHIFT LEVER RODS THE LEVERS SHOULD BE 3/4" FROM SEAT CUSHION FRAME WITH SEAT IN FULL FORWARD POSITION-THE SHIFT RAILS IN TRANSFER CASE SHOULD BE LOCATED IN DETENT DISENGAGE & LOW POSITION AS SHOWN ABOVE

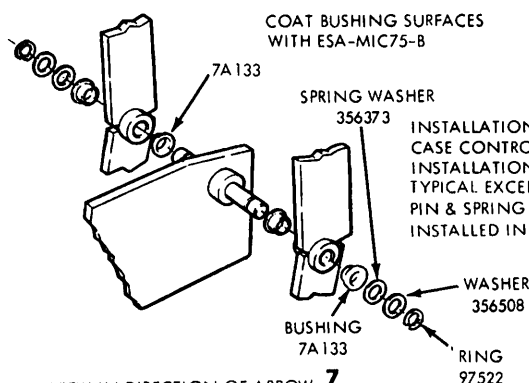

VIEW IN DIRECTION OF ARROW **Z**

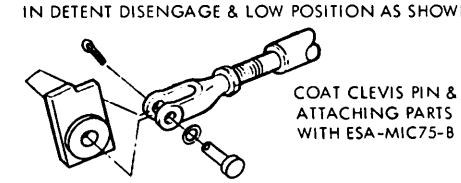

VIEW IN DIRECTION OF ARROW **Y**

C2497-A

FIG. 1 Transfer Case Controls and Linkage

ADJUSTMENT

BRAKE LINKAGE ADJUSTMENT

1. Place the parking brake lever in its fully OFF position.
2. Disconnect the adjusting rod clevis at the bellcrank (Fig. 1).
3. Push the parking brake bellcrank toward the clevis to remove the free play from the parking brake shoe operating lever.
4. Adjust the adjusting rod length so that it can be positioned on the bellcrank. Install the clevis pivot pin, washers and cotter pin.
5. Tighten the adjusting rod jam nut.

REMOVAL AND INSTALLATION

DRUM, SHOES AND BACKING PLATE

Removal

1. Release the parking brake floor lever.
2. Disconnect the parking brake rod from the brake shoe operating lever.
3. Cut the lock wire and remove the capscrews retaining the brake drum to the brake flange. Remove the drum.
4. Remove the brake hub retaining snap ring (Fig. 2).
5. Using a suitable puller, remove the brake hub from the front output shaft gear (Fig. 3).
6. Unhook the brake shoe return springs and remove the brake shoes and lever (Fig. 4).
7. Remove the mounting bolts and lift off the brake backing plate, washer, deflector and gasket (Fig. 5).

Installation

1. Position a new gasket to the case and then mount the brake backing plate, deflector and stamped washer. Insert the cap screws with star washers and tighten to 60-77 ft-lbs.
2. Position the brake lever on the backing plate.
3. Position the brake shoes on the backing plate with actuating pawl in the web slot.
4. Install brake shoe return spring.
5. Slide the brake hub over the splines of the front output gear. Install the retaining ring.
6. Install the brake drum with lockwashers and cap screws. Torque the cap screws to 60-77 ft-lbs and insert lock wire.
7. Install the expansion plugs. The smaller plug goes in the bore or the front output gear and the larger in the brake hub.
8. Connect the parking brake rod to the shoe operating lever and adjust linkage as necessary.

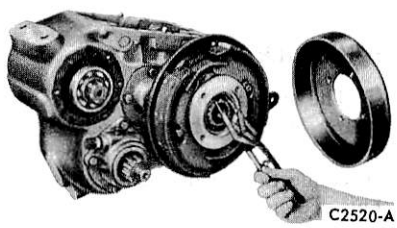

FIG. 2 Removing Brake Hub Retaining Snap Ring

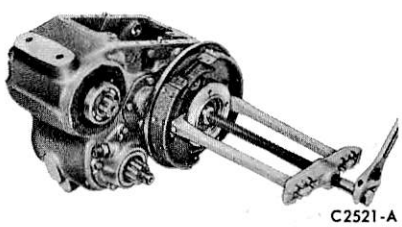

FIG. 3 Removing Brake Hub

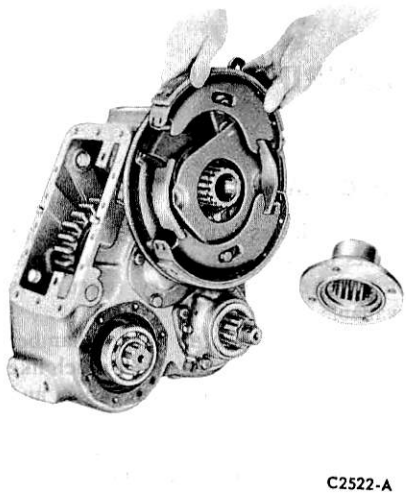

FIG. 4 Removing Brake Shoes

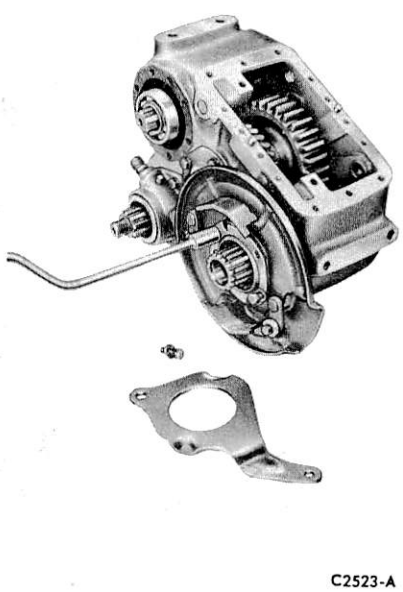

FIG. 5 Removing Brake Backing Plate Retaining Bolts

PART 12-83 Parking Brake — Maxibrake — Rear Wheels, Air

Applies To 600 Thru 900 Series Trucks with Cam Type Brakes

COMPONENT INDEX	Page	COMPONENT INDEX	Page
AIR CHAMBER		DESCRIPTION	83-01
Disassembly and Assembly	83-02	PARKING BRAKE (MANUAL RELEASE)	
Removal and Installation	83-02	Adjustment	83-02

DESCRIPTION

AIR CHAMBER

On vehicles equipped with full air brakes of the S-cam type, a Maxibrake emergency stop safety feature is available.

The Maxibrake air brake chamber (used on the rear axle only) is much like the conventional brake chamber, and differs only in that it contains an independently operated spring loaded piston which, when released due to low air pressure, will set the service brakes (Fig. 1).

A manual control valve located in the cab exhausts the air from the safety chamber for safety stops, or to set the service brakes for parking.

SCHRADER VALVE

The air system on all vehicles with spring actuated rear wheel parking brakes is equipped with a Schrader valve for connection to an outside air supply. This valve permits the system to be recharged with air from an outside source, releasing the spring actuated parking brakes. The vehicle may then be towed in an emergency. **Outside air source can be used only if protected system is in operating condition.**

Schrader Valve Location

The Schrader valve is located on the protected air tank on F-, B-, and C-Series vehicles. On W-and WT-Series trucks, the Schrader valve is located on the air manifold under the right front side of the cab (just above right headlamp). All L-Series have the Schrader valve located on the outboard side of the left side air tank.

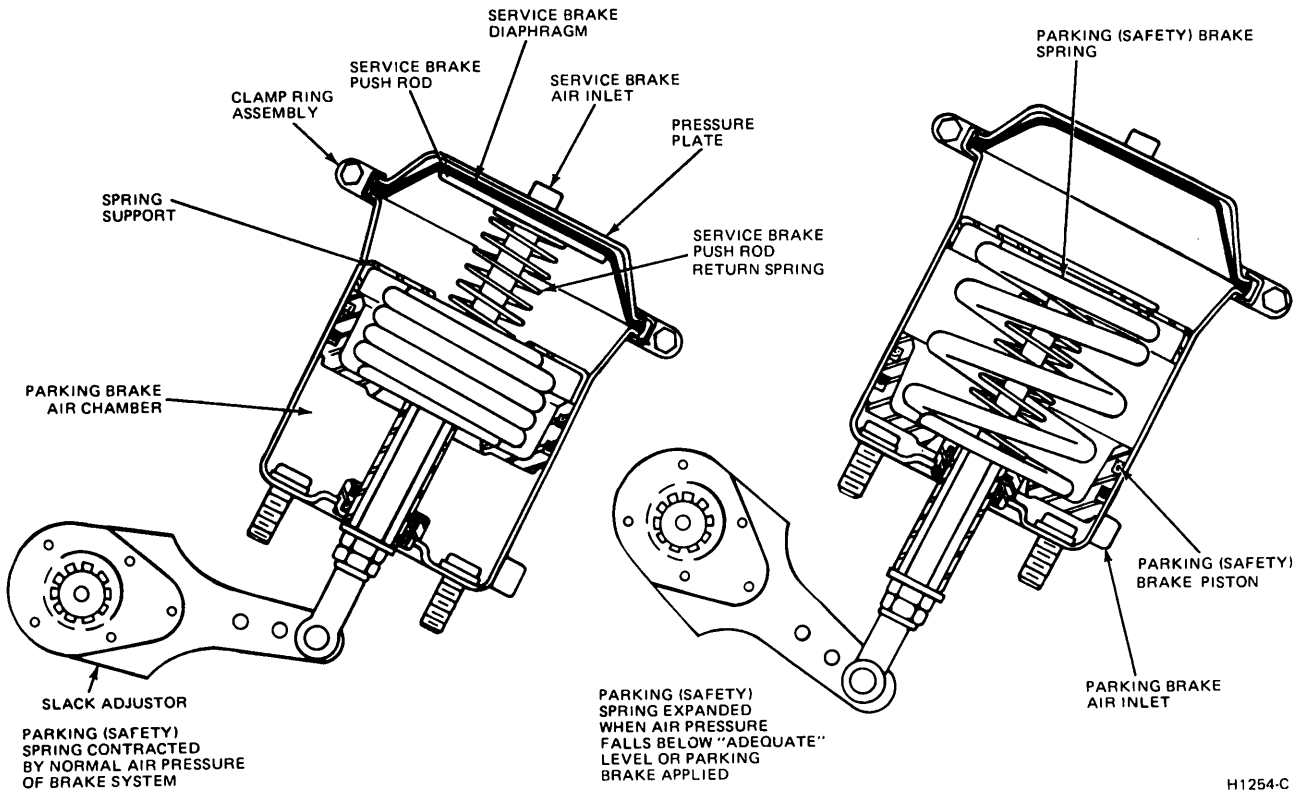

FIG. 1 Maxibrake Operation

ADJUSTMENT

SLACK ADJUSTER

Refer to Part 12-40 for slack adjuster adjustment.

MAXIBRAKE MANUAL RELEASE

If air pressure cannot be restored in the protected air system, the spring actuated brakes must be released as follows:

1. Disconnect air hoses from spring brake port of the chamber.
2. Install Schrader valves in chambers.
3. Charge the chambers with air from an outside source.
4. Remove the Schrader valves (after normal air pressure has been restored) and reconnect all lines.

REMOVAL AND INSTALLATION

AIR CHAMBER ASSEMBLY

Removal

1. Release all the air from the system, and then disconnect the air lines from the brake chamber.
2. Install a Schrader valve in the parking (spring) brake air chamber and charge the chamber with approximately 100 lbs. This will hold the parking brake spring compressed.
3. Disconnect the push rod yoke from the slack adjuster.
4. Remove the mounting nuts and remove the brake chamber.

Installation

1. Position the brake chamber assembly on the mounting bracket and install the attaching nuts. Torque the nuts to 110-150 ft-lbs.
2. Connect the push rod yoke to the slack adjuster.
3. Carefully release air from the parking brake chamber by means of the Schrader valve. Then, remove the Schrader valve. Connect the air lines to the brake chamber and build up the air pressure.
4. Adjust the brakes.

SERVICE BRAKE DIAPHRAGM

If a new diaphragm is installed in the brake chamber on one side of the axle, a new one should be installed in the corresponding brake chamber on the opposide side also; otherwise uneven braking may result.

Removal and Installation

1. Scribe the pressure plate, clamp ring and cylinder assembly to aid in reassembly.
2. Remove the clamp ring and pressure plate.
3. Remove the service brake diaphragm.
4. Place the service brake diaphragm on the pressure plate.
5. Position the pressure plate and diaphragm assembly on the cylinder assembly with the scribed marks in alignment.
6. Install the clamp ring so that the scribed marks are aligned and torque clamp ring bolts to 150-175 in-lbs.

DISASSEMBLY AND ASSEMBLY

SERVICE AND PARKING BRAKE CHAMBERS

Refer to Figure 2 for disassembled view.

Disassembly

1. Scribe the clamp ring, pressure plate and cylinder assembly so that they can be reassembled in the same position.
2. Mount the cylinder assembly in a vise, using one of the mounting studs with its nut or in a fixture such as shown in Figure 3.
3. Remove the clamp ring, pressure plate and service brake diaphragm (Figs. 4 and 5).
4. Remove the clevis yoke. Push inward on the service brake. Push rod face plate and remove the flanged nut from the push rod.
5. Remove the push rod assembly (push rod, spring retainer and return spring) as shown in Figure 5.
6. Free the push rod bushing from the cylinder boss using Tool T71T-2225-A inserted through the neck of the piston as shown in Fig. 6. Remove the bushing.
7. Install Tool T71T-2225-A through the cylinder assembly and loosely install spacer and nut as shown in Figure 7. This tool is used as a draw bar in order to safely release parking brake spring tension.
8. Tighten the nut on the tool shaft until the flat of the tool is centered and resting **firmly** against the parking brake spring support. This forces the spring to remain safely caged and permits the removal of the piston, spring support and spring assembly from the cylinder.
9. Remove the eight capscrews which hold the spring support in place (Fig. 8).
10. **Slowly** back off the nut on Tool T71T-2225-A until **all** spring pressure is released. Remove the tool and remove the parking brake spring support and the spring from the cylinder assembly.
11. Blow any loose dirt out of the cylinder with compressed air and wipe the cylinder walls clean. Using a drift the same outside diameter as the parking brake piston neck, or a socket of suitable size, drive the parking brake piston assembly out of the cylinder (Fig. 9).
12. Remove the wiper ring and the O-ring from the piston grooves (Fig. 10).

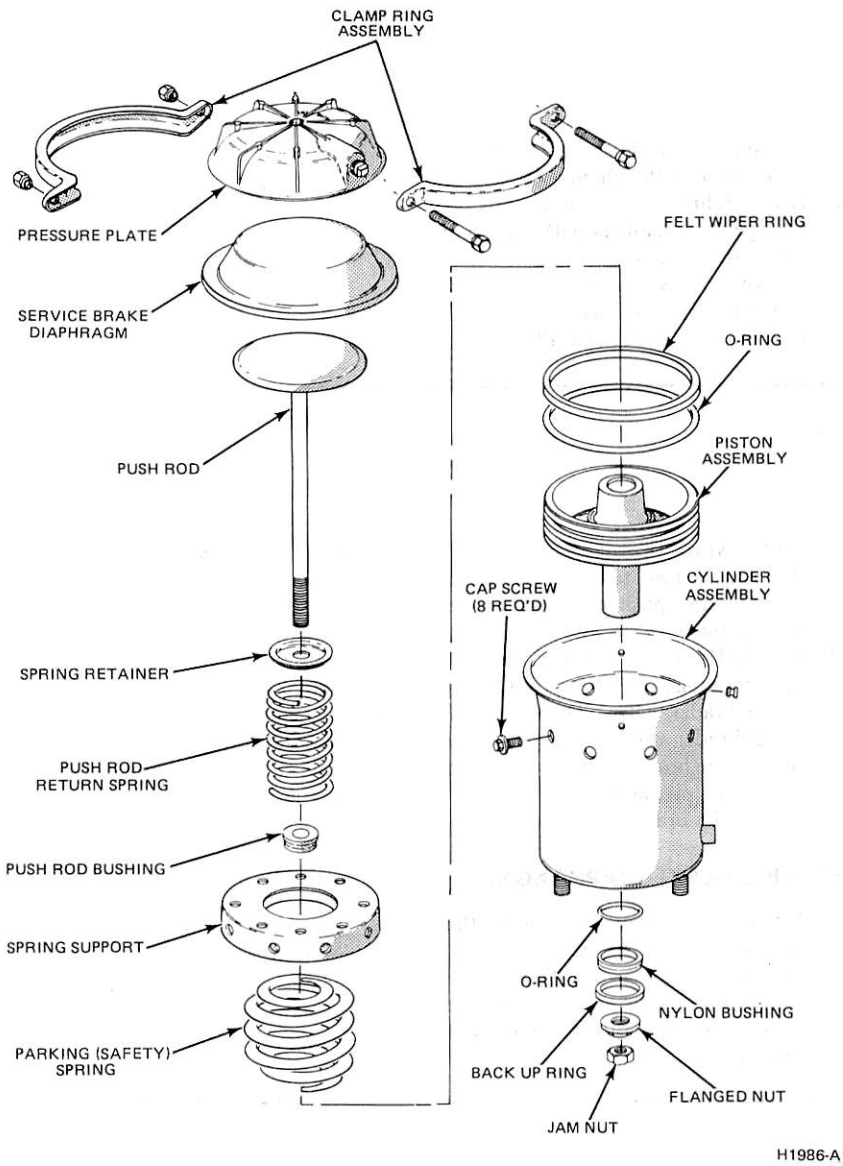

FIG. 2 Maxibrake—Disassembled View

13. Remove the O-ring, nylon bushing and back-up ring from the cylinder center boss. Use a sharp pointed instrument to remove the bushing; work clockwise from the cut to pry the bushing out of its groove; then remove the back-up ring.
14. Wash all metal parts in cleaning solvent. Inspect all parts for excessive wear or deterioration. Replace all seals and parts included in the seal kit.

Assembly

1. Coat the inside center boss groove with Lubriplate. Fill the piston O-ring groove (groove nearest neck) about half full of Lubriplate or equivalent. Lightly grease the inside of the cylinder wall with Lubriplate, or equivalent. Coat the safety piston spring with a rust inhibitor compound.
2. Install the back-up ring in the cylinder boss groove; then, the nylon bushing. **The bushing must be installed so that the side with a bevel edge faces towards the inside of the cylinder.**
3. Install the large O-ring in the bottom groove of the piston (groove nearest neck) and the saturated felt wiper in the top groove.
4. Insert the piston assembly into the cylinder, holding the felt wiper in place. Use a block of wood and a light hammer if necessary, to bottom

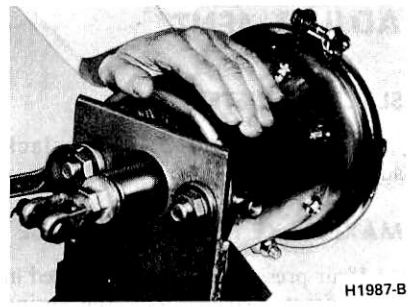

FIG. 3 Cylinder Assembly Mounted in Holding Fixture

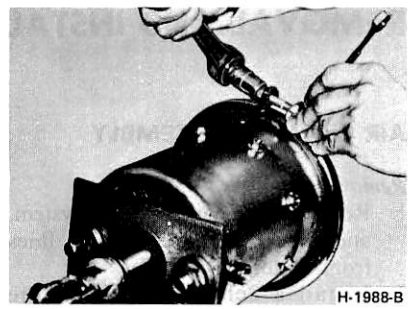

FIG. 4 Removing Clamp Ring Retaining Bolts

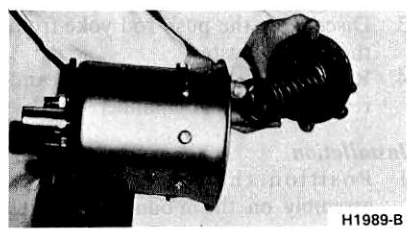

FIG. 5 Removing Push Rod Assembly

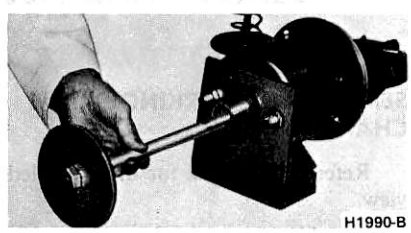

FIG. 6 Removing Push Rod Bushing

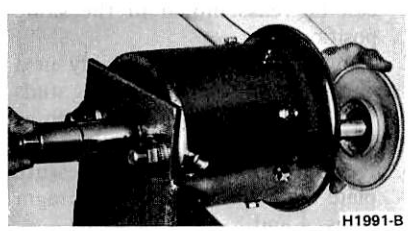

FIG. 7 Installing Tool T71T-2225-A

the piston assembly in the cylinder.

5. Place the safety piston spring on the piston in the cylinder. Place the safety piston spring support on the spring and install the draw bar Tool T71T-2225-A as shown in Figure 11.
6. Tighten the nut slightly while centering the spring over the piston hub and the spring support; then, tighten the nut, drawing the safety spring and the spring support into the cylinder until the holes in the spring support and the cylinder are in alignment.
7. Install the eight capscrews which secure the spring support to the cylinder (Fig. 12). Alternately tighten the capscrews.
8. Remove the draw bar tool.
9. Install the push rod bushing into the piston. Tap the bushing lightly to be sure that it is properly seated (Fig. 13).
10. Assemble the push rod spring retainer and the push rod return spring on the push rod and install the push rod and spring assembly in the cylinder. Secure the push rod with the flanged nut (Fig. 14).
11. Place the service brake diaphragm on the pressure plate (crown surface toward the pressure plate).
12. Position the pressure plate and diaphragm assembly on the cylinder assembly with the scribed marks in alignment. Apply hand pressure to the top of the pressure plate to compress the service piston return spring and install the clamp ring. Torque the clamp ring bolts to 150-175 in-lbs.
13. Install a Schrader valve in the safety chamber air inlet and charge the safety chamber with enough air to retract the safety piston (compressing the safety piston spring).
14. Screw the flanged nut on the push rod shaft until there is 1/16 inch space between the flange of the nut and the neck of the safety piston tube (Fig. 15). Lock the flanged nut in place with the jam nut.
15. Install the clevis yoke on the push rod. **Maintain a distance of 2 15/16 inches (plus or minus 1/8 inch) between the centerline of the clevis pin holes and the mounting flats of the cylinder assembly for Type 24 or 30 brake assemblies. This distance should be 3 1/4 inches (plus or minus 1/8 inch) for Type 36 units.**
16. After checking for air leaks, carefully release the air by depressing the Schrader valve; then, remove the Schrader valve.

Maximum permissible air leakage is 1 lb per minute at 100 psi test pressure.

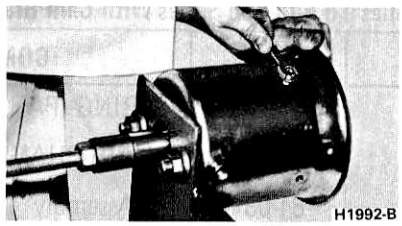

FIG. 8 Removing Spring Support Retaining Capscrews

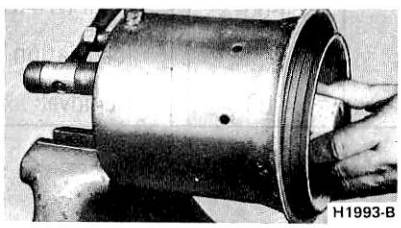

FIG. 9 Removing Parking Brake (Safety) Piston Assembly

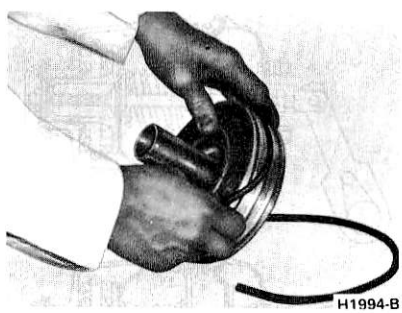

FIG. 10 Removing Wiper Ring and O-Ring from Piston

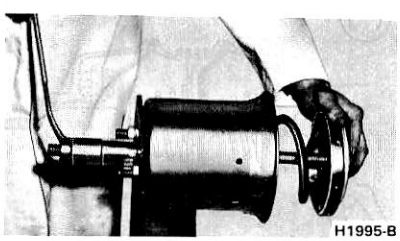

FIG. 11 Installing Safety Piston Spring and Support Plate

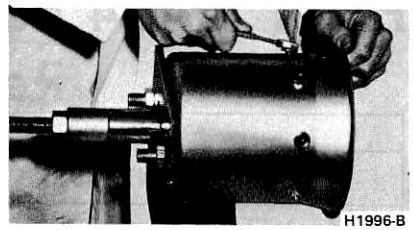

FIG. 12 Installing Spring Support Retaining Capscrews

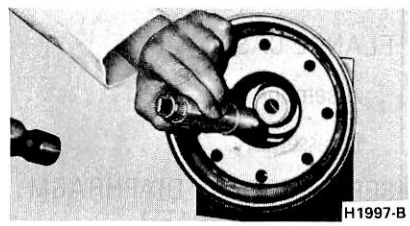

FIG. 13 Installing Push Rod Bushing

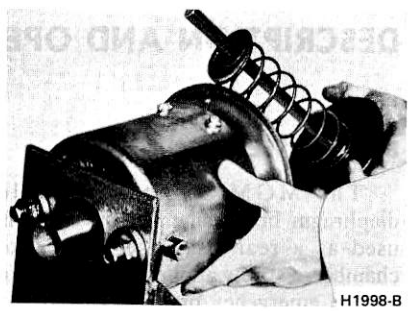

FIG. 14 Assembling Push Rod and

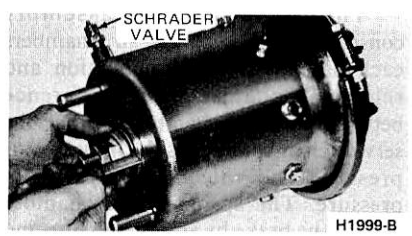

FIG. 15 Installing Push Rod Shaft Flanged Nut

PART 12-84 Parking Brake - MGM Stopgard - Rear Wheels, Air

Applies To 600-900 Series With Cam Brakes

COMPONENT INDEX	Page	COMPONENT INDEX	Page
BRAKE ASSEMBLY		SPRING (PARKING) BRAKE	
Description and Operation	84-01	AIR CHAMBER	
Removal and Installation	84-03	Assembly	84-06
FLANGE CASE		Disassembly	84-05
Assembly	84-06	SPRING (PARKING) BRAKE	
Disassembly	84-06	DIAPHRAGM	
SERVICE BRAKE DIAPHRAGM		Installation	84-04
Removal and Installation	84-03	Removal	84-04

DESCRIPTION AND OPERATION

BRAKE ASSEMBLY

The MGM Stopgard double diaphragm brake chamber assembly is used as a rear wheel service brake chamber, a spring applied parking brake and an emergency brake in case of air pressure loss (Figs. 1 and 2). This assembly is used with S-cam brakes only.

The brake chamber assembly consists of two separate air chambers each having its own application and release mechanism. The difference between the two chambers is that the service chamber applies the brake by air pressure and releases it by spring pressure. The spring brake chamber applies the brake by spring pressure and releases it by air pressure.

During normal driving (brakes released), the service brakes are held released by the diaphragm return spring in the service air chamber assembly. Air reservoir pressure against the spring brake chamber piston and diaphragm holds the parking emergency spring compressed.

During normal braking (service brakes applied) air pressure from the brake valve working against the service brake diaphragm applies the brakes. Air reservoir pressure in the spring brake chamber holds the parking-emergency spring compressed. Normal service brake operation is not affected by the spring brake.

During parking or an emergency

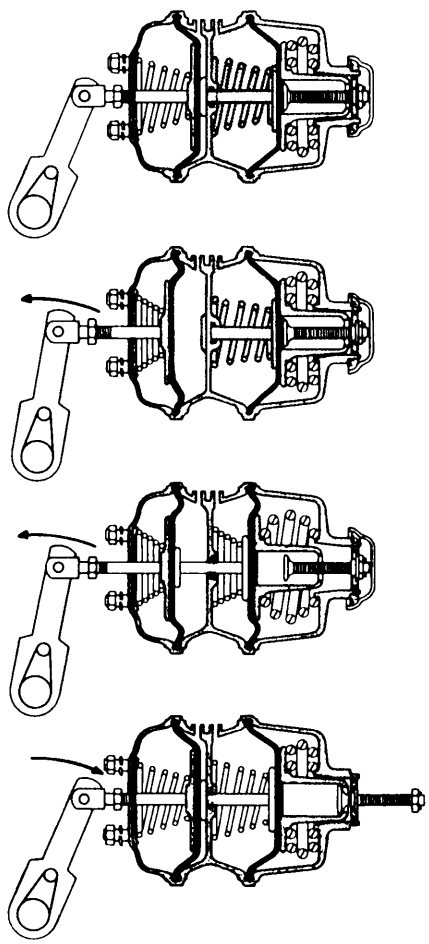

FIG. 1 MGM Stopgard Brake Operation

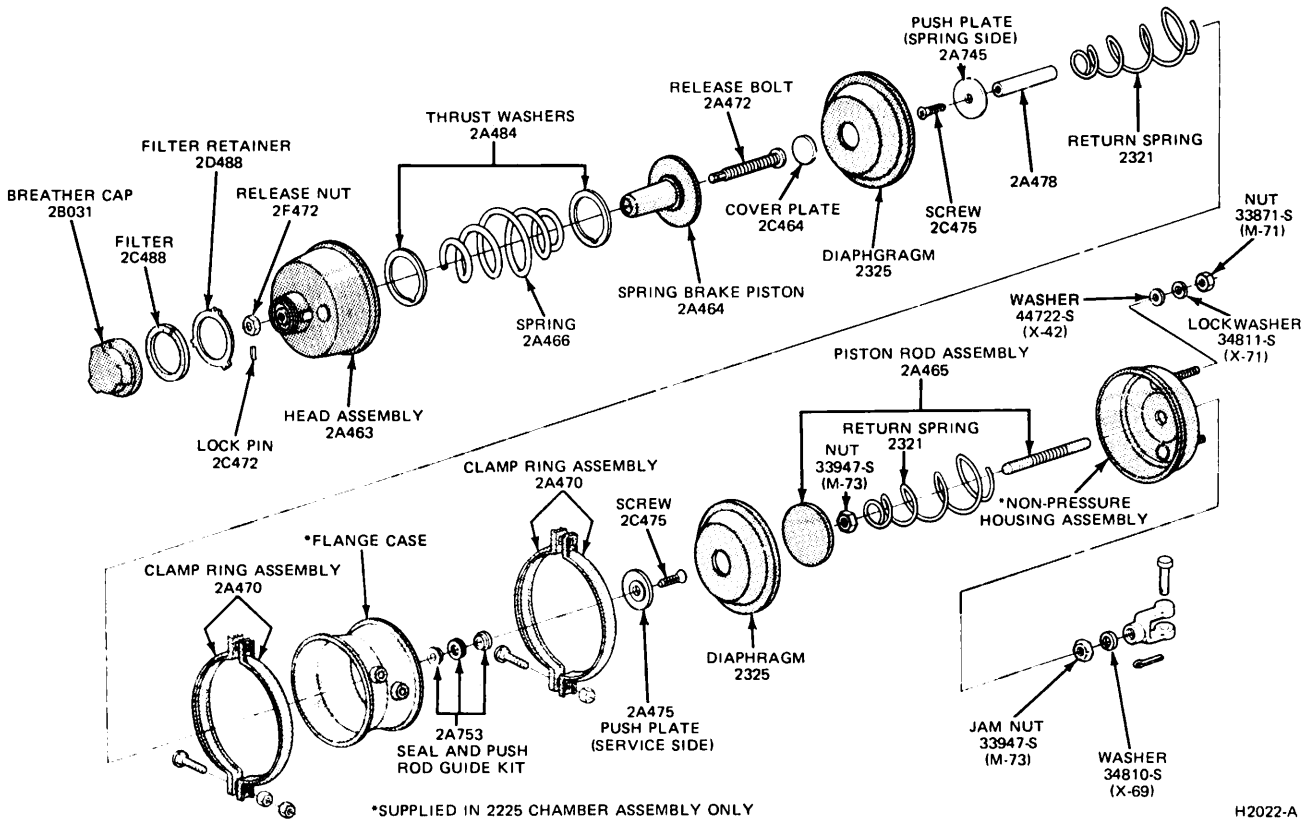

FIG. 2 MGM Stopgard Brake—Disassembled View

brake application, air is exhausted from the spring brake chamber. This permits the parking-emergency spring to expand, moving the spring brake piston and the service brake push rod against the slack adjuster assembly to apply the brakes.

Loss of system air pressure at the spring brake chamber will result in automatic application of the brakes. In the event it is necessary to move the vehicle before air pressure can be restored, the parking-emergency spring must be manually compressed. The procedure for manually releasing and then resetting the spring brake after repairs have been performed follows. **Do not drive vehicle until the air system is repaired.**

PARKING BRAKE AIR RELEASE

The air system on all vehicles with spring actuated rear wheel parking brakes is equipped with a Schrader valve for connection to an outside air supply. This valve permits the system to be recharged with air from an outside source, releasing the spring actuated parking brakes. The vehicle may then be towed in an emergency.

An outside air source can be used only if protected system is in operating condition.

A Schrader valve is located on the outboard side of the left side air tank for L-Series, on the protected air tank on C-Series and on the air manifold under the right front side of the cab (just above the right headlight) on the WWT-Series. If an auxiliary air source is not available and normal air pressure cannot be restored, the parking brake must be manually released.

PARKING BRAKE MANUAL RELEASE AND RESETTING

1. TO RELEASE: Block the wheels to prevent the vehicle from moving.
2. Remove (unscrew) the breather cap.
3. Using a 15/16 inch wrench, unscrew the release bolt (Fig. 3) approximately 30 turns until the brake shoes release from the drum. If the release bolt binds, apply rust penetrant (COAZ-19A501-A) or equivalent and allow it to soak into the threads.
4. TO RESET: If the release bolt threads are dry, coat the bolt with chassis lubricant. Screw the release bolt down into the unit until the nut bottoms against the case. Torque the nut to 50 ft-lbs.

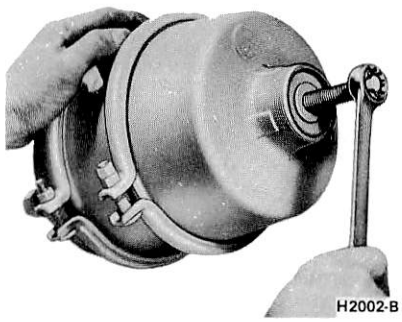

FIG. 3 Parking Brake Manual Release

REMOVAL AND INSTALLATION

COMPLETE UNIT

Removal

1. Exhaust all air from the system.
2. Disconnect all air lines from the brake air chambers.
3. **Follow manual release instructions.**
4. Remove the cotter pin from the clevis yoke pin and remove the clevis yoke pin.
5. Using a 15/16 inch wrench, remove the mounting stud nuts and lock washers. Remove the actuating unit.

Installation

1. Position the assembly on its mounting bracket.
2. Using a 15/16 inch wrench, install the two retaining bolts and lock washers. Torque the nuts to 150 ft-lbs.
3. Position the push rod yoke to the slack adjuster, insert the clevis yoke pin and install the cotter pin.
4. Tighten the push rod yoke lock nut.
5. Reset the parking brake as described under Parking Brake Manual Release and Resetting.
6. Connect the air lines to the brake air chambers. Charge the system and check for air leaks and proper operation. Refer to Part 12-40 and check adjustment of push rod travel.

SERVICE BRAKE DIAPHRAGM

Removal

1. **Follow Manual Release procedure.**
2. Exhaust all air from the system and disconnect the air lines from the brake chambers.
3. Holding the spring brake chamber with one hand, loosen the clamp ring retaining bolt nuts on the service brake chamber (Fig. 4).
4. Remove the clamp ring and lift the spring brake chamber away from the service brake chamber.
5. Remove the service brake diaphragm.
6. Inspect the diaphragm, return spring, service piston and the inside of the exposed chambers. Replace any worn or damaged parts.

Installation

1. Position the diaphragm over the service piston and return spring while checking alignment of the return spring to the chamber and piston.
2. Position the spring brake chamber on the diaphragm in the position as it was removed. Hold the two units together while installing the clamp ring.
3. Tighten the clamp nuts to 25-35 ft-lbs torque. Check all around the clamp ring to further insure proper actuator alignment and clamp seating. Using a soft hammer, tap the circumference of the clamp ring to further insure proper seating and retorque the clamp nuts to 25-35 ft-lbs.
4. Manually reset the parking (spring) brake (step 4 under Parking Brake Manual Release and Resetting).
5. Connect both air lines; then, operate both the spring brake and parking brake several times to insure proper operation.
6. With both brake chambers pressurized, soap test the clamp ring area to verify leak-free assembly; then, exhaust pressure in the service brake only and recheck torque on the clamp ring nuts.

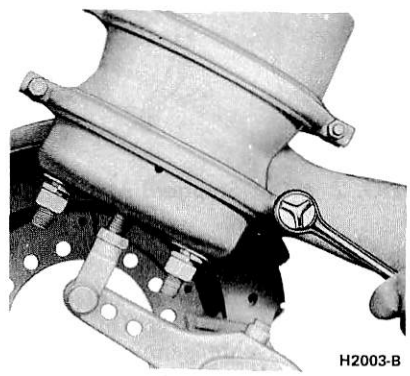

FIG. 4 Removing Service Brake Clamp Ring Retaining Bolt Nuts

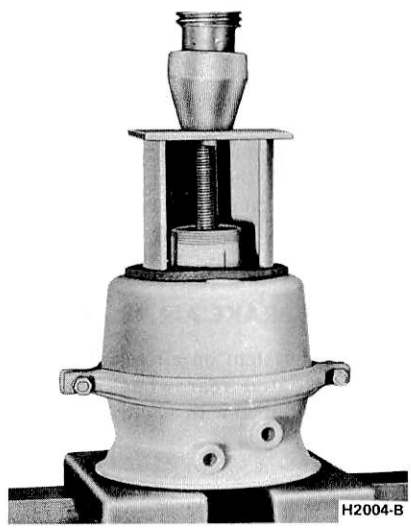

FIG. 5 Spring Brake Unit Positioned on Press

SPRING (PARKING) BRAKE DIAPHRAGM

Removal

1. Follow instructions (steps 1 through 4) under **Service Brake Diaphragm Removal. Be sure that the parking brake is manually released.**
2. Place the spring brake unit in a hydraulic press, using a slit tube and flat plate as shown in Figure 5. The slit tube can be fabricated locally using a 5 inch length of heavy 4 inch outside diameter pipe. The press ram must have a minimum of 8 inches of travel available **after** it has contacted the flat plate.
3. Take up very light pressure by the ram on the flat plate. Leave the press ram in this position and remove the clamp ring nuts (Fig. 6) and the clamp ring.
4. **Very slowly** release pressure on the press ram. At this point, there should be no outward pressure from within the actuator and the ram and plate should separate almost at once. **However, if tension remains between the press ram and the plate, either the unit is not fully manually released, or damage has occurred in the release mechanism. If the unit is released, but pressure is present, continue to relax the press slowly until the parking brake spring is fully extended and all parts are free.**
5. Lift off the head-spring-piston sub-assembly (Fig. 7). **Treat this sub-assembly with caution as the powerful parking brake spring is caged between the piston and head.**
6. Remove the parking brake diaphragm (Fig. 8). While the diaphragm is removed, inspect the inside of the flange case, return spring, push rod plate, screw and guide rings. (If service is required on any of these parts, refer to Parking (Spring) Brake Air Chamber and Spring Disassembly and Assembly). **Be sure that the screw holding the push rod plate to the push rod is very securely tight (Fig. 9).** Clean all exposed parts.

Installation

1. Check alignment of the return spring, position the diaphragm on the flange case, and place the parking brake spring and piston sub-assembly over the diaphragm (Fig. 7). Check for straight alignment of all parts and place the unit in a press with the split tube and flat plate in position on the case (Fig. 6).
2. Apply very light pressure to the plate with the press ram and reinstall the clamp ring (Fig. 6). Tighten the clamp ring nuts to 25-35 ft-lbs torque, and using a soft hammer, tap the circumference of the clamp ring to further insure proper seating. Retorque the clamp ring nuts to 25-35 ft-lbs.
3. With the assembly still in the press, attach a shop air line with 100-125 psi pressure to the spring brake inlet (Fig. 10). If a leak is discovered, disassemble unit, reposition parts and reassemble. If a leak still exists, change diaphragm. After passing the leak test, retighten the clamp ring nuts to 25-35 ft-lbs. torque. Also, install the second nut on each clamp ring bolt to form a secure lock.
4. Install the spring brake chamber assembly on the vehicle following the instructions under Service Brake Diaphragm Installation.

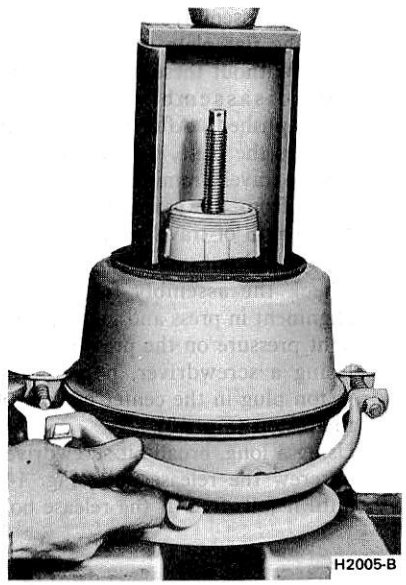

FIG. 6 Removing Spring Brake Chamber Clamp Ring

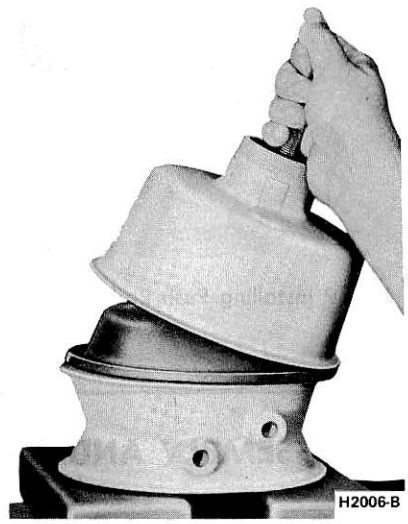

FIG. 7 Removing Parking (Spring) Brake Sub-Assembly



FIG. 8 Removing Parking (Spring) Brake Diaphragm



FIG. 9 Installing Push Rod Plate

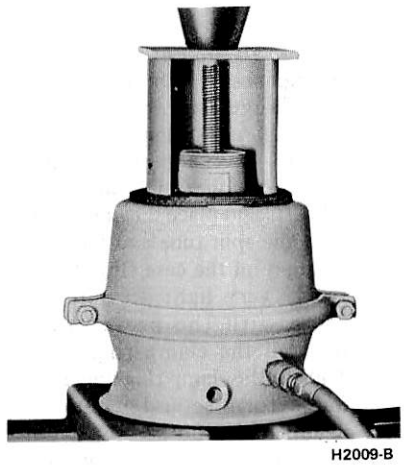

FIG. 10 Testing Spring Brake Diaphragm for Leaks

DISASSEMBLY AND ASSEMBLY

SPRING (PARKING) BRAKE AIR CHAMBER

Disassembly

1. Remove the spring brake section from the vehicle as described in steps 1 through 4 under Service Brake Diaphragm Removal.

If a broken power spring is suspected, confirmation can usually be made by screwing the release bolt **all the way into** the unit and vigorously shaking the assembly. Noticeable rattling from within the head end of the assembly normally confirms a fractured spring. Further evidence would be supplied by only light resistance when screwing the release hold down.

Even though a broken spring may have been confirmed, it is important to manually release the actuator again before further disassembly.

2. Remove the lock pin from the release bolt, using a 1/8 inch diameter punch (Fig. 11).
3. Remove the head-spring-piston sub-assembly from the flange case by following step 2 through step 5 of Spring (Parking) Brake Diaphragm Removal.
4. Position the head-spring-piston assembly in a press as shown in Figure 12. (It is important to position one 4 inch diameter, approximately 3-4 inch length slit-tube under the assembly supporting the piston and another 4 inch diameter, 4-6 inch length slit tube over the assembly between the head and the flat plate under the press ram. Without these tubes, the final **safe** disassembly cannot be accomplished). After the press ram touches the plate, the ram must be able to travel a minimum of 8 inches away from the assembly. Without this length of travel available, the spring will not completely relax.
5. Check the assembly for straight alignment in press and take up very light pressure on the press ram.
6. Using a screwdriver, pop off the piston plug in the center bottom of the piston (Fig. 13).
7. Using a long, broad-bit screwdriver unscrew the release bolt (Fig. 14) until it falls free. If the release bolt resists removal, take up slightly more pressure on ram.
8. With release bolt removed, **gradually** relax the ram (Fig. 15) until head loses contact with press ram (Fig. 16).
9. After disassembly all parts should be thoroughly washed in clean solvent and visually inspected for wear and/or damage. Replace any parts as required.

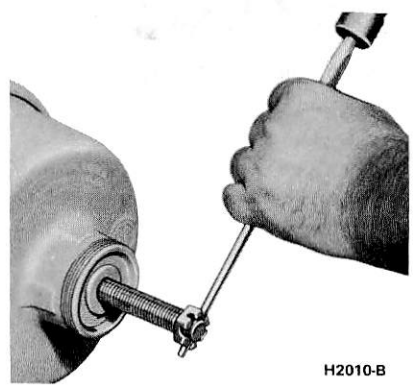

FIG. 11 Removing Lock Pin from Release Bolt

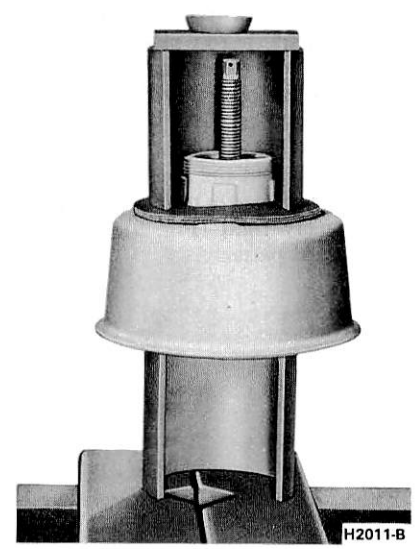

FIG. 12 Spring Brake Sub-Assembly Positioned in Press

Assembly

1. Prior to reassembly of the head-spring-piston sub-assembly, generously apply Chassis Lubricant (COAZ-19A501-A) to the inside of the head centerwell, the outside of the piston shank, the inside of the piston shank, and to the release bolt.
2. Place the slit-tube on the press base and position the parts on top in the following order: piston thrust washer (late models use a spring shield cup in place of this thrust washer), spring, thrust washer, and head—followed by the second slit-tube and the flat plate (Fig. 17).
3. Check straight up-and-down alignment of all parts and **standing to the side of the press,** take up tension very slowly on the press ram (Fig. 15). **Check alignment continually as straight-in reassembly is important.** If misalignment occurs, relax press and begin compression of spring again.
4. With the spring completely compressed between the piston and head and with the piston bottomed up inside the head, replace the release bolt up through the piston shank (Fig. 14).
5. Screw the bolt in until approximately 3 inches of the bolt extends through the head insert (Fig. 12).
6. Relax tension on the press ram slowly until the parts separate from the ram.
7. Remove the sub-assembly from the press and replace the release nut on the release bolt. Lock it in place with the lock pin (Fig. 1).
8. Replace the piston plug in the center hole of the piston. Firmly tap the center of the plug with a hammer so that it moves over-center to a flat position (Fig. 18).

FLANGE CASE

Disassembly

1. Follow step 1 through step 5 of Spring (Parking) Brake Diaphragm Removal.
2. With left hand holding the large push rod plate (Fig. 6), remove the screw holding the plate to the push rod. If the screw resists removal, it may be necessary to use a pair of padded pliers to securely hold the push rod from turning (Fig. 19). Use caution when finally unscrewing the screw for the push rod plate retains the return spring under light tension.
3. Remove all parts from the flange case and wash them thoroughly.
4. Remove the guide rings (Fig. 20) and the push rod seal. This seal can best be removed by inserting a small bladed screwdriver behind the seal in the groove (Fig. 21) and very carefully prying the seal out of the groove.

Assembly

1. Clean the seal groove in the case, lightly lubricate groove, lubricate a new push rod seal, and reinsert the seal into the groove carefully so as not to damage it. Seat the seal in the groove by running your finger around the inside diameter.
2. Replace the guide rings on both sides of the seal (Fig. 20). The widest flange side always faces away from the seal.

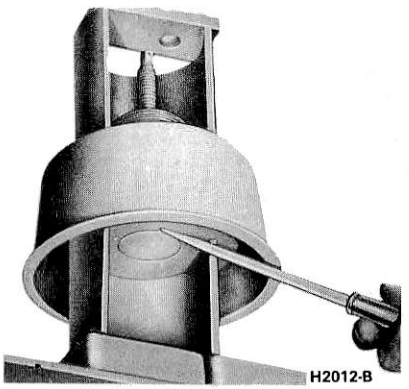

FIG. 13 Removing Piston Plug

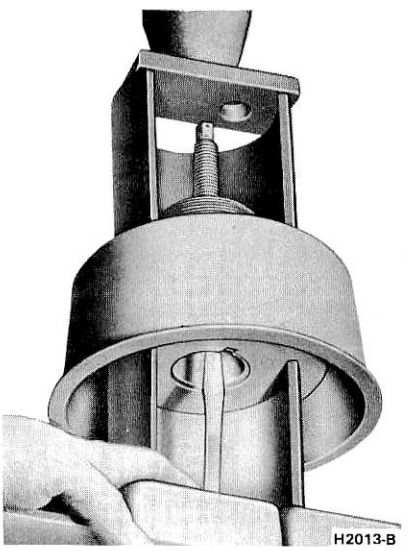

FIG. 14 Removing Release Bolt

3. Install the smaller push rod plate back on the push rod if it was removed and **securely** lock it with the screw. Take care not to mark or damage the surface of the push rod. Lubricate the tip of the push rod and insert it through the seal from the service brake side of the case.
4. Place the case and push rod sub-assembly on any 3 inch diameter support on a work bench. Install the return spring in the case and compress the spring enough with the large push rod plate to be able to reinstall the screw through the plate and into the push rod.

The screws holding the two plates to the push rod must be very securely tight. To properly tighten both screws, grip outside diameter of the bottom plate with a smooth-jaw vise and securely tighten the screw holding the upper, largeplate. This will tighten both screws at the same time.

5. Check alignment of the return spring in the flange case and to the large push rod— straightness is important (Fig. 22).
6. Inspect the diaphragm before further assembly and replace if worn, damaged, or over one (1) year old.
7. Follow step 1 through step 4 of Parking (Spring) Brake Diaphragm Installation to reassemble the flange case to the head-spring-piston sub-assembly.

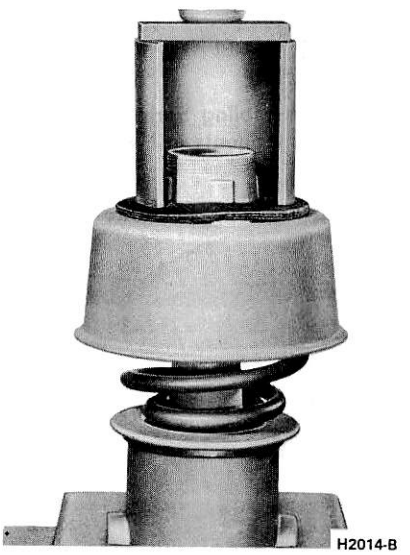

FIG. 15 Relaxing Press Ram

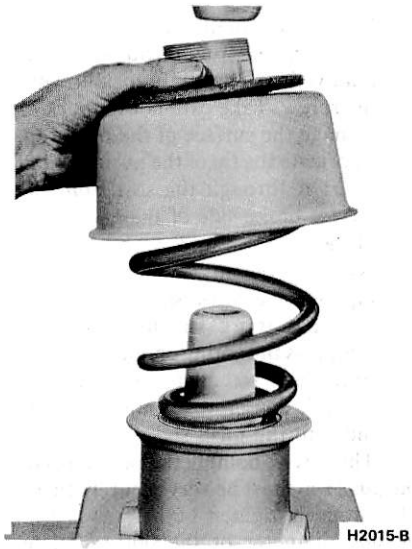

FIG. 16 Press Ram Fully Released

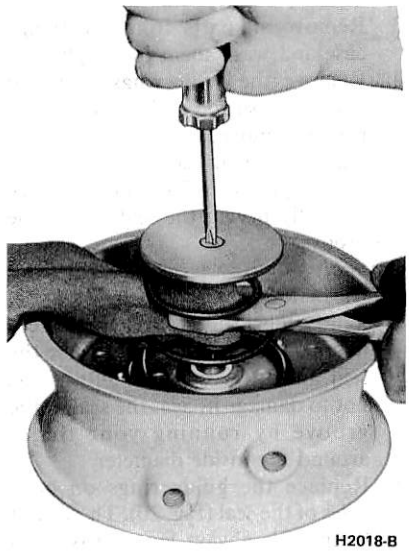

FIG. 19 Removing Push Rod Plate Retaining Screw

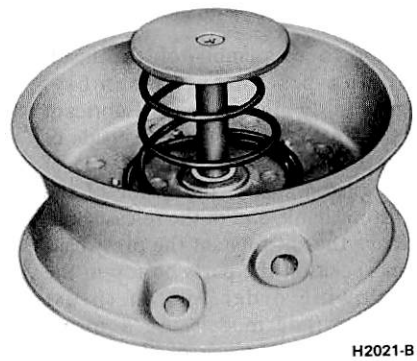

FIG. 22 Push Rod Piston and Return Spring Assembled in Case

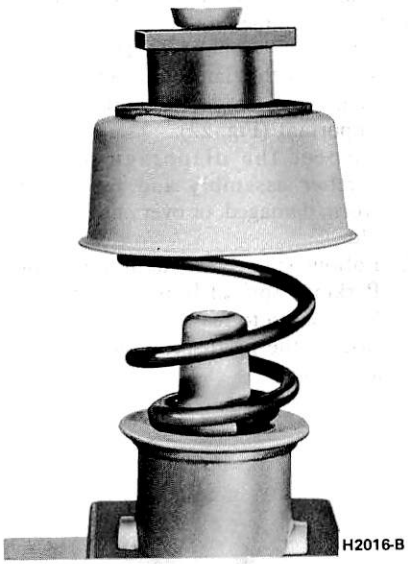

FIG. 17 Assembling Spring Components in Head



FIG. 20 Removing Guide Rings and Seal

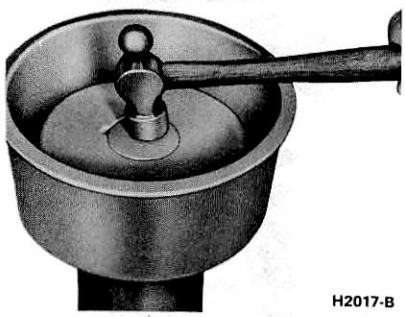

FIG. 18 Installing Piston Plug

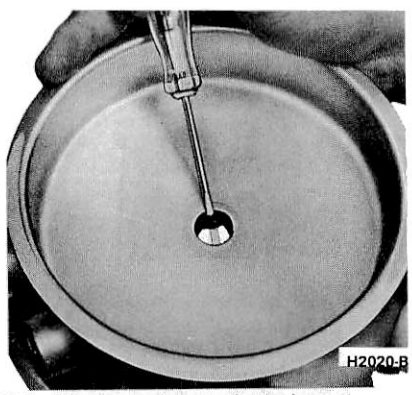

FIG. 21 Removing Push Rod Seal

PART 12-85 Parking Brake — MGM Shortstop — Rear Wheels, Air

Applies To 600 Thru 900 Series Trucks with Wedge Brakes

COMPONENT INDEX	Page	COMPONENT INDEX	Page
AIR CHAMBER		DESCRIPTION	85-01
Assembly	85-03	SHORTSTOP UNIT ONLY	
Disassembly	85-02	Manual Release	85-02
Removal and Installation	85-02	Removal and Installation	85-02

DESCRIPTION

MGM SHORTSTOP SYSTEM

The Shortstop parking and emergency brake system is available on trucks equipped with the Bendix Twinplex-wedge-type air brake.

Shortstop spring brake units provide mechanical spring actuation of the Twinplex wedge brakes whenever air pressure fails. During normal operation, the Shortstop power spring is held compressed by system air pressure under the piston in the unit (Fig. 1).

For parking operation, a control valve is provided in the cab. Pulling the valve knob out will release the air from the Shortstop pressure chamber, allowing the spring pressure to apply the brakes. The spring will be compressed again and the brakes released as soon as the parking valve is pushed in and/or system air pressure is restored by the compressor.

The air system on all vehicles with spring actuated rear wheel parking brakes is equipped with a Schrader valve for connection to an outside air supply. This valve permits the system to be recharged with air from an outside source, releasing the spring actuated parking brakes. The vehicle may then be towed in an emergency. An outside air source can be used only if protected system is in operating condition.

Schrader Valve Location

The Schrader valve is located on the protected air tank on F-, B-and C-Series vehicles. On W-and WT-Series trucks, the Schrader valve is located on the air manifold under the right front side of the cab (just above right headlamp). All L-Series have Schrader valve located on the outboard side of the left side air tank.

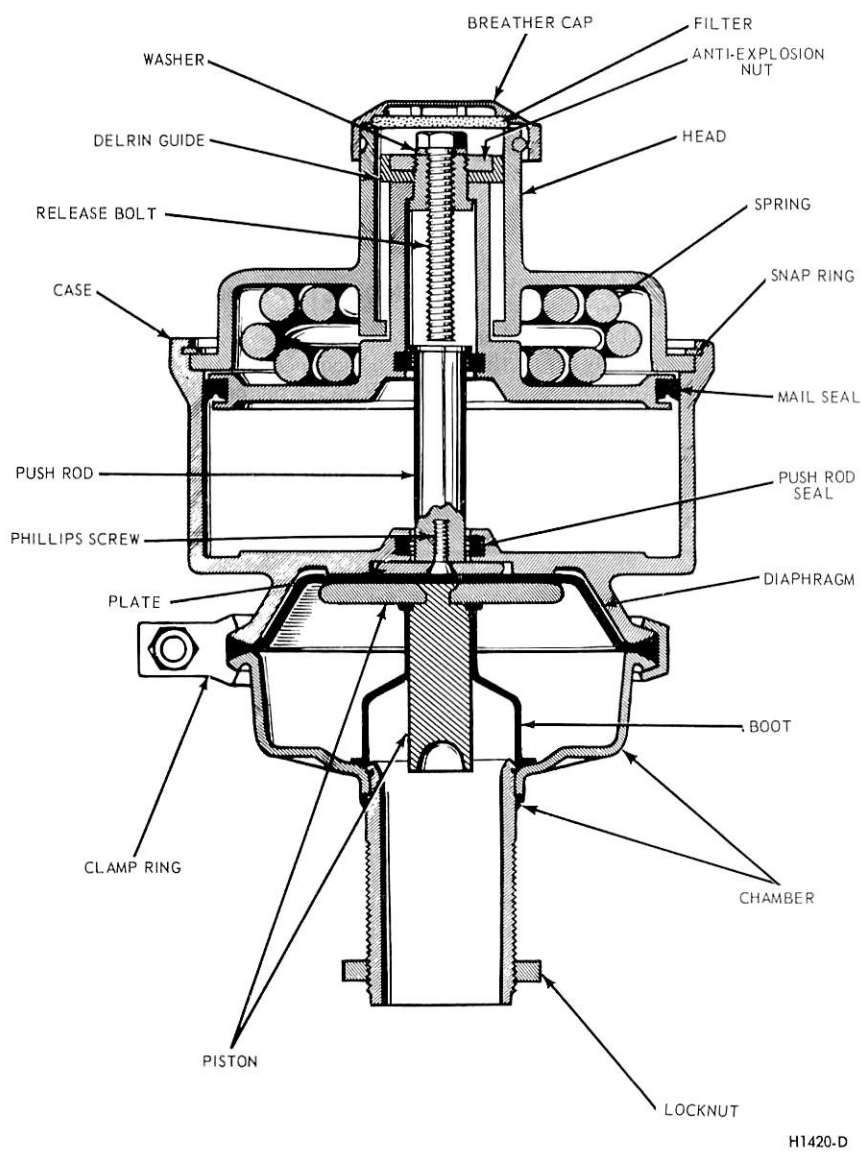

FIG. 1 MGM Shortstop Brake—Sectional View

ADJUSTMENTS

SPRING BRAKE MANUAL RELEASE

If air pressure fails in the Shortstop piston chamber, the power spring applies the brakes, and, unless pressure can be re-established, the service brakes must be released as follows in order to move the truck:

1. Remove the bolt and nut holding the cap and filter to the housing (Fig. 1), and remove the cap and filter.
2. Using a 9/16 inch deep socket wrench, unscrew the release bolt until it turns freely. The brake shoe pressure is now released. Follow this procedure until all Shortstop units are released.
3. When air pressure has been restored, screw the release bolt in until the lock washer holds it securely. This **MUST** be done to regain Shortstop protection.

REMOVAL AND INSTALLATION

COMPLETE UNIT

Removal

To remove the complete Shortstop unit from the brake assembly proceed as follows:

1. Disconnect all air lines to the unit.
2. Remove the breather cap and filter and unscrew the release bolt completely, using a deep-socket 9/16 inch wrench.
3. Loosen the lock nut on the service brake chamber tube (Fig. 1) with a drift punch and hammer.
4. Unscrew the service brake chamber and Shortstop assembly from the wedge housing and remove.

Installation

1. Be sure the release bolt is unscrewed completely.
2. Position the Shortstop unit and service brake chamber to the wedge housing and turn the unit into the housing until it bottoms.
3. Back the unit out less than one turn to align hose connections, and tighten the lock nut.
4. Connect the air lines, charge the Shortstop chamber with air and screw the release bolt in tight. Install the cap and filter.

SHORTSTOP UNIT ONLY

Removal

1. Disconnect all air lines to the unit.
2. Remove the breather cap and filter and unscrew the release bolt completely, using a deep-socket 9/16 inch wrench.
3. Remove the clamp ring fastening the Shortstop unit to the service brake chamber and remove the Shortstop unit.

Installation

1. Make sure the release bolt is completely unscrewed.
2. Position the Shortstop unit to the service brake chamber and install the clamp ring.
3. Connect the air lines, charge the Shortstop chamber with air and screw the release bolt in tight. Install the cap and filter.

OVERHAUL

Disassembly

1. With the unit removed from the vehicle, and using a sharp, thin-bladed penknife or screwdriver, remove the soft solder from the head of the Phillips screw shown in Figs. 1 and 2.
2. Position a Phillips head screwdriver to the screw and seat it in the screw slots with the aid of a light hammer.
3. Remove the Phillips head screw and the pressure plate (Figs. 1 and 2).
4. Remove the release bolt and the washer and insert a screwdriver through the release bolt hole. Hold the screwdriver firmly against the top of the push rod (Fig. 1) and charge the spring brake piston chamber with air (minimum 70 psi).
5. Remove the screwdriver and unscrew the anti-explosion nut and delrin guide washer, using a drift punch and hammer.
6. Exhaust the air pressure. Remove the sealant covering and assembly snap ring (Figs. 1 and 2) between the head and the case.

Place the spring brake assembly in an arbor press prior to final disassembly. Press must have 6 inch stroke remaining after unit is placed in the press.

7. Take up a slight tension on the press. Do not attempt to compress head into case.
8. Using a screwdriver, remove the snap ring from the groove in the case.
9. Relax the press slowly. The spring will push the head out of the case. **If the assembly has a broken spring, use a cage or screen for protection. When the spring is free, remove the whole assembly from the press.**
10. Remove the head and the spring from the case.
11. Grasp the piston by its hub and pull it straight out of the case.
12. Wash all parts in a suitable non-oily solvent.
13. Inspect all parts for wear or damage. Replace with new parts or refinish with emery or crocus cloth, if necessary.

Air Chamber Repair

1. Clean inside of the service brake chamber. If a new boot is required,

it should be cemented to the chamber tube and allowed to dry at least ten minutes (3M No. EC-2141 or EC-1357 Adhesive recommended).

2. Install the piston, making sure the wedge shaft fits into the piston seat.
3. If a new diaphragm is to be installed, cement the diaphragm to the piston and allow to dry at least ten minutes (3M No. EC-2141 or EC-1357 Adhesive recommended).
4. Install the clamp ring with the diaphragm between the service brake and spring brake chambers. Tighten the clamp ring bolt and nut. Tap the circumference of the ring with a soft hammer to seat the ring, and retighten the bolt and nut.
5. Connect the air lines, charge the spring brake with air and screw down the release bolt and washer.
6. Install the breaker cap and new polyurethane filter, securing them with the bolt and nut furnished. Actuate the spring brake several times to check operation. Actuate the service brake several times to check operation.

Assembly

Before assembly, check all parts to be sure they are perfectly clean. Then apply a low temperature moly-type lubricant to all inside surfaces.

1. Lightly lubricate the seal groove in the piston with a low temperature moly-type lubricant. Repeat the procedure for the collar seal and push rod seal (Figs. 1 and 2).
2. If removed from the piston, the push rod is installed by working the flanged end through the seal in the center of the piston.
3. Install the piston assembly in the case, starting the piston at a 45 degree angle. Slowly bring the piston hub up to 90 degrees and install the push rod in the seal.
4. Install the spring on the piston and the head on the spring.
5. Place the assembly in an arbor press and slowly compress the spring. Use care, making sure the piston hub enters the head opening correctly. Continue to compress the assembly, making sure the lip of the head seats against the shoulder of the case correctly.
6. Install the snap ring. Tap both ends of the snap ring to insure complete seating.
7. Relax the press pressure and remove the assembly from the press.
8. Using a screwdriver through the release bolt hole, press down firmly on the push rod while charging the cylinder with air (minimum 70 psi).
9. Remove the screwdriver and install the guide washer on the insert in the piston hub. Tighten the washer to 30 ft-lb. Make the following air leak tests:

Checking For Air Leaks

1. Charge the unit with air. Apply oil around the guide washer. If bubbles appear, replace the main seal.
2. Charge the unit with air. Apply oil around the push rod in the diaphragm end of the case. If bubbles appear, replace the push rod seal.
3. Install the pressure plate on the push rod. Use emery cloth to smooth burrs off the head of the Phillips head screw, if present.
4. Clean the snap ring groove area with solvent and apply a sealant to cover the snap ring (Fig. 1). If possible, allow the sealant to dry overnight before installing the unit on the truck.

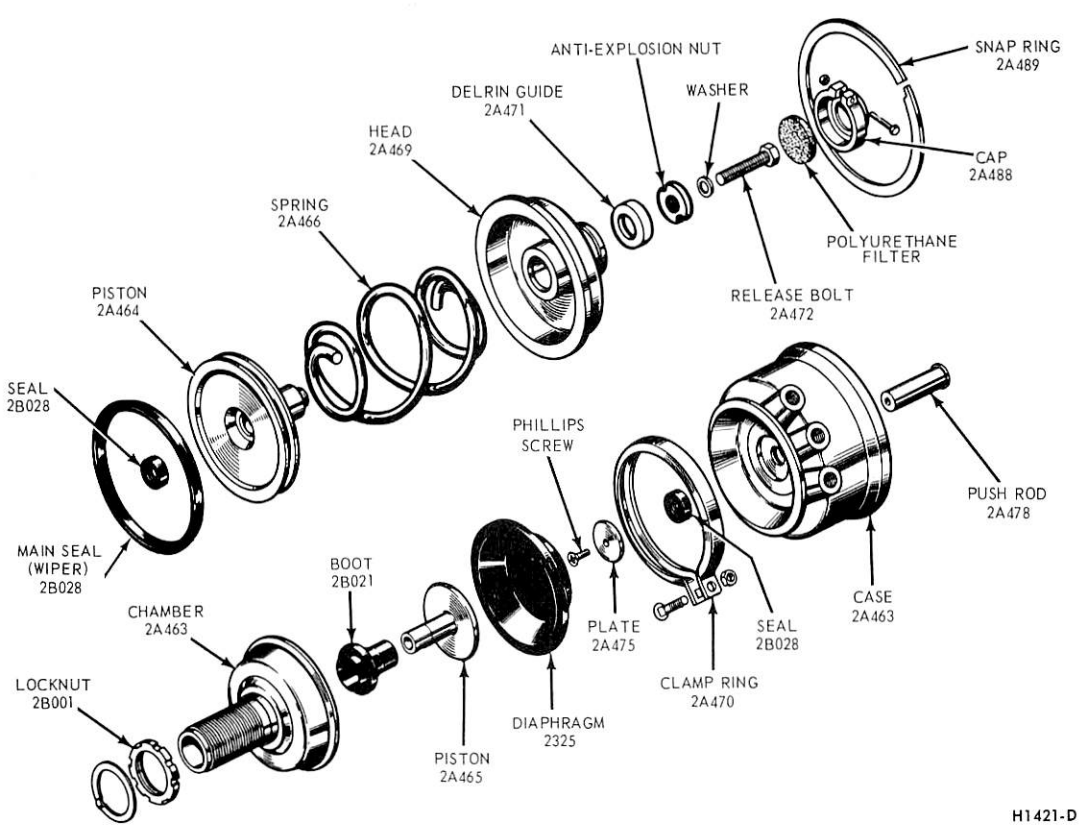

FIG. 2 MGM Shortstop Brake—Disassembled View

PART 12-86 Parking Brake — MGM Low Profile - Rear Wheels, Air

Applies to LT-Series with 30,000, 34,000 and 38,000 Lb. (34,000 Lb. Suspension) Axles and Wedge Brakes

COMPONENT INDEX	Page	COMPONENT INDEX	Page
AIR CHAMBERS		DESCRIPTION	86-01
Disassembly and Assembly	86-03		
Removal and Installation	86-03	PARKING BRAKE	
		Air Release	86-02
BREATHER (AIR) FILTER		Manual Release	86-02
Removal and Installation	86-03	Manual Resetting	86-02

DESCRIPTION AND OPERATION

The MGM Low Profile brake chamber assembly is used as a rear wheel service brake chamber, a spring applied parking brake and an emergency brake in case of air pressure loss (Fig. 1).

The brake chamber assembly consists of two separate air chambers each having its own application and release mechanism. The difference between the two chambers is that the diaphragm type service chamber applies the brake by air pressure and releases it by spring pressure. The piston type spring brake chamber applies the brake by spring pressure and releases it by air pressure.

During normal driving (brakes released), the service brakes are held released by the diaphragm return spring in the wedge assembly. Air reservoir pressure against the spring brake chamber piston holds the parking-emergency spring compressed.

During normal braking (service brakes applied) air pressure from the brake valve working against the service brake diaphragm applies the brakes. Air reservoir pressure in the spring brake chamber holds the parking-emergency spring compressed. Normal service brake operation is not affected by the spring brake.

During parking or an emergency brake application, air is exhausted from the spring brake chamber. This permits the parking-emergency spring to expand, moving the spring brake piston and the service brake push rod against the wedge assembly to apply the brakes.

Loss of system air pressure at the spring brake chamber will result in automatic application of the brakes. In the event it is necessary to move the vehicle before air pressure can be restored, the parking-emergency spring must be manually compressed. The procedure for manually releasing and then resetting the spring brake after repairs have been performed follows. **Do not drive vehicle until the air system is repaired.**

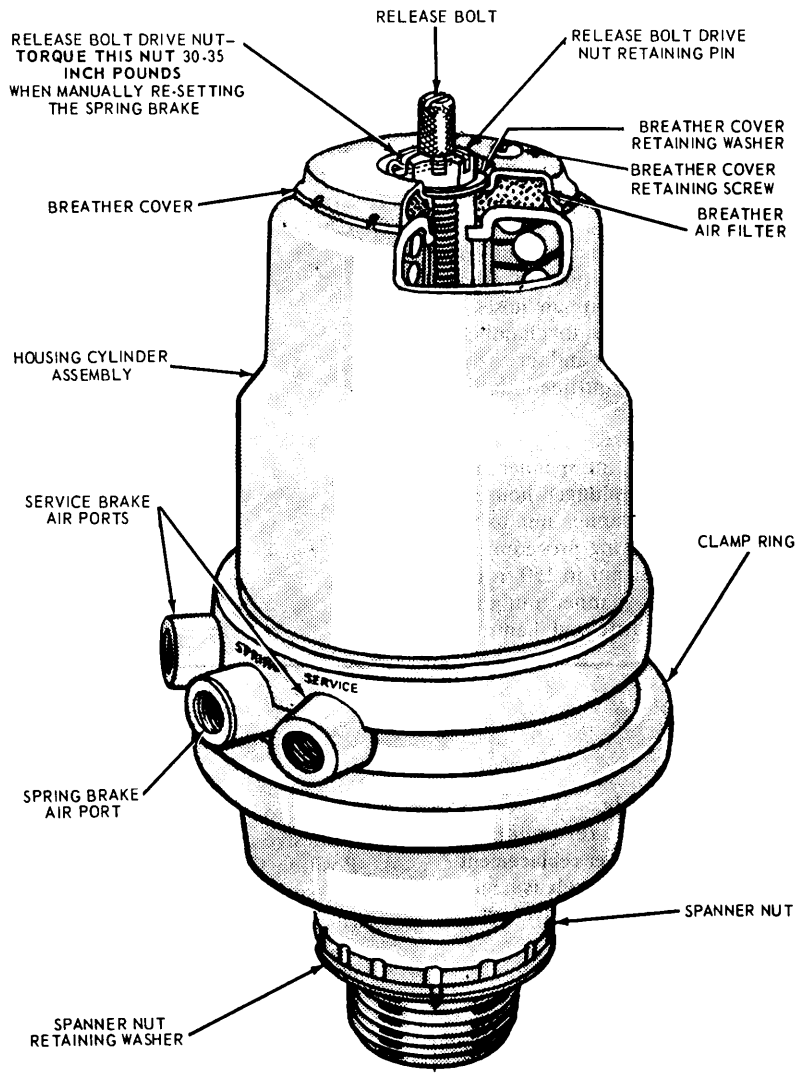

FIG. 1 MGM Low Profile Brake—Sectional View

ADJUSTMENTS

PARKING BRAKE AIR RELEASE

The air system on all vehicles with spring actuated rear wheel parking brakes is equipped with a Schrader valve for connection to an outside air supply. This valve permits the system to be recharged with air from an outside source, releasing the spring actuated parking brakes. The vehicle may then be towed in an emergency.

An outside air source can be used only if protected system is in operating condition.

A Schrader valve is located on the outboard side of the left side air tank. **If an auxiliary air source is not available and normal air pressure cannot be restored, the parking brake must be manually released.**

PARKING BRAKE MANUAL RELEASE

1. Block the wheels to prevent the vehicle from moving.
2. Using a 3/4 inch deep socket, unscrew the release bolt (Fig. 1) approximately 1 3/4 inches. **Do not use an air impact wrench since this will damage the assembly.**

PARKING BRAKE MANUAL RESETTING

1. If the breather cover and filter are loose, tighten the breather cover retaining screw.
2. Using a 3/4 inch deep socket, screw the release bolt until the nut securely butts the flat washer against the breather cover. **Torque the drive nut 30-35 in-lbs. Do not over torque the nut or use an air impact wrench since this will damage the assembly.**

REMOVAL AND INSTALLATION

AIR CHAMBERS

Removal

1. **Manually compress the parking-emergency spring** by unscrewing the release bolt as outlined under Manual Release.
2. Remove air hoses from the assembly **after exhausting system air pressure.**
3. Disengage the spanner nut retaining washer from the spanner nut, loosen the spanner nut and remove the assembly.

Installation

1. **Make sure the parking-emergency spring is compressed** and the spanner nut is screwed onto the chamber tube as far as it will go (to end of threads).
2. Install a new spanner nut washer with raised part of washer toward the plunger housing, and screw the assembly into the housing until it bottoms.
3. If necessary, back chamber out not more than one full turn to align chamber for connecting air hoses.
4. Connect all air lines to chamber, charge system with air and screw the release bolt in as outlined under Manual Resetting.
5. Apply parking brake.
6. Engage raised part of spanner nut washer in slot of plunger housing and tighten the spanner nut using either of the following procedures:
   a. Torque spanner nut to 150 ft-lbs.
   b. Hand tighten spanner nut and then using a drift and hammer advance (tighten) it 1 1/2 teeth.
7. Bend spanner nut washer into one of the nut slots and release the parking brake.
8. Check all connections for leaks.

OVERHAUL

The parking brake air chamber is serviced as an assembly only and should not be disassembled except for performing the following maintenace:

Replace or clean the breather (air) filter each 50,000 miles or one (1) year during on-highway operation and each 24,000 miles during off-highway operation. If cleaning is performed, use isopropyl alcohol and dry with compressed air. **Do not operate vehicle without a breather ccover or filter.**

Replace the service brake diaphragm each 50,000 miles or one (1) year.

BREATHER (AIR) FILTER

Removal and Installation

1. Build up system air pressure to governor cut-out to insure full compression of the parking-emergency spring.
2. Using a 3/4 inch deep socket, unscrew the release bolt (Fig. 1) approximately 1 inch.
3. Remove the breather cover retaining screw.
4. Remove the breather filter by carefully stretching it over the cover.
5. Reinstall a new or cleaned filter.
6. Position the cover on the top of the housing cylinder and install the cover retaining screw. Screw the release bolt in until the nut securely butts the flat washer against the cover. **Torque the nut 30-35 in-lbs. Do not over torque the nut or use an air impact wrench since this will damage the assembly.**

The filter and cover must be replaced if damaged. Cover replacement requires removal of the release bolt drive nut retaining pin and drive nut.

SERVICE AIR CHAMBER

Disassembly

1. Manually compress the parking-emergency spring by unscrewing the release bolt as described under Manual Release.
2. Scribe a locating mark on the spring brake, clamp ring and service air chambers to permit reassembly in the same position.
3. Remove the breather (air) filter.
4. Remove the clamp ring and separate the two chambers. **Do not attempt to disassemble the spring brake chamber.**
5. Remove the diaphragm, piston and piston boot from the service air chamber (Fig. 2).

Assembly

1. Clean inside of the service brake chamber. If a new boot is required, it should be cemented to the chamber tube and allowed to dry at least ten minutes (3M No. EC-2141 or EC-1357 Adhesive recommended).
2. Install the piston, making sure the wedge shaft fits into the piston seat.
3. If a new diaphragm is to be installed, cement the diaphragm to the piston and allow to dry at least ten minutes (3M No. EC-2141 or EC-1357 Adhesive recommended).
4. Position the service air chamber to the spring brake chamber aligning the scribe marks made before disassembly. Install the clamp ring with the diaphragm between the service brake and spring brake chambers. Tighten the clamp ring bolt and nut. Tap the circumference of the ring with a soft hammer to seat the ring, and retighten the bolt and nut.
5. Connect the air lines, charge the spring brake with air and screw down the release bolt and washer.
6. Install the breather cover and new polyurethane filter. Actuate the spring brake several times to check operation. Actuate the service brake several times to check operation.

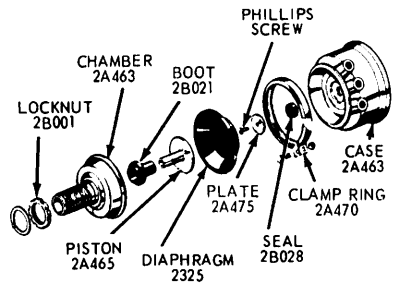

FIG. 2 MGM Low Profile Service Air Chamber—Disassembled

PART 12-87 Parking Brake — Anchor Lok — Rear Wheels, Air

Applies to C-, L-, W- and WT-Series with Cam-Type Brakes

COMPONENT INDEX	Page	COMPONENT INDEX	Page
AIR CHAMBER		DESCRIPTION	87-01
Disassembly and Assembly	87-02	PARKING BRAKE (MANUAL RELEASE)	
Removal and Installation	87-02	Adjustment	87-02

DESCRIPTION

The Anchorlok service and spring (parking) brake assembly is used on W-Series trucks with S-cam brakes.

The brake chamber assembly consists of two separate air chambers. Each chamber has its own diaphragm and push rod (Fig. 1). The service brake chamber applies the brake by air pressure and is released by spring pressure when air is exhausted. The parking or emergency brake is applied by spring pressure and is released by air pressure.

The diaphragms should be replaced every 50,000 miles or each year.

The air system on all vehicles with spring actuated rear wheel parking brakes is equipped with a Schrader valve for connection to an outside air supply. This valve permits the system to be recharged with air from an outside source, releasing the spring actuated parking brakes. The vehicle may then be towed in an emergency.

Outside air source can be used only if protected system is in operating condition.

On W and WT-Series trucks, the Schrader valve is located on the air manifold under the right front side of the cab (just above right headlamp).

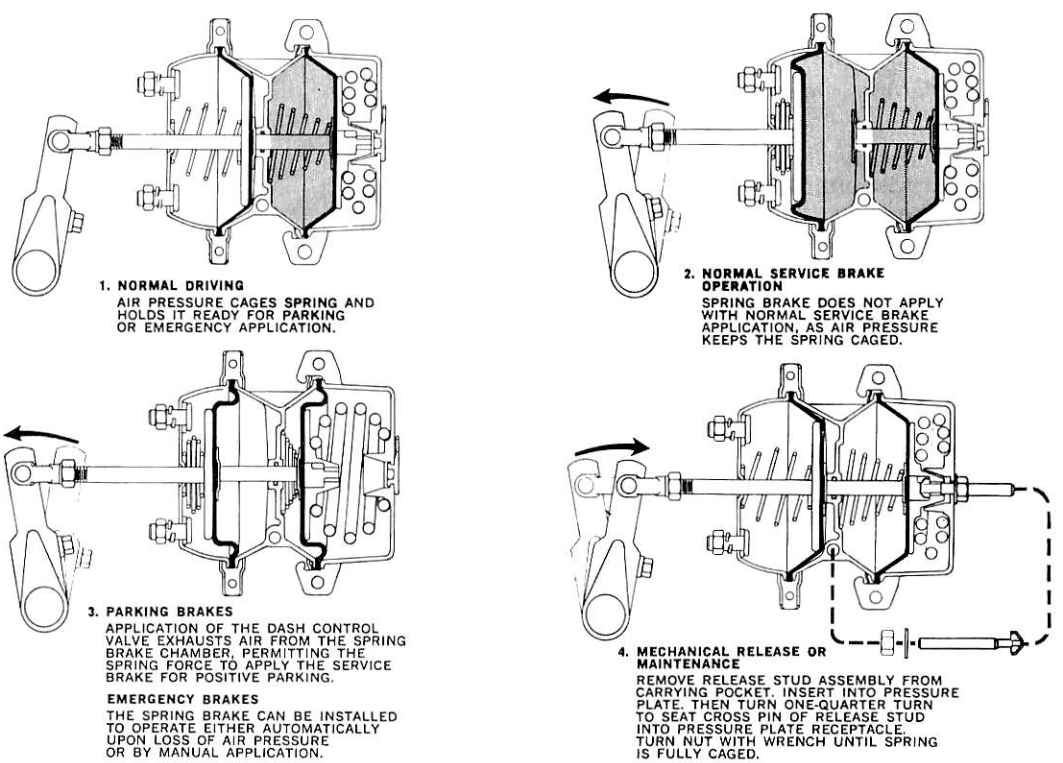

FIG. 1 Anchorlok Brake Operation and Mechanical Release

ADJUSTMENTS

MANUAL (MECHANICAL) RELEASE OF PARKING BRAKE

If necessary to move the vehicle after an emergency application (before air pressure can be restored), the emergency-parking spring can be compressed mechanically to release the brake as follows: A release stud (spring caging tool) is attached to each brake chamber assembly.

Remove the release stud tool and nut from the carrying pocket on the chamber assembly. Remove the access plug from the end of the spring chamber. Insert the release stud through the opening in the chamber and into the spring pressure plate (Fig. 1). Turn the release stud one-fourth (1/4) turn to engage the tangs on the release stud into the slot in the pressure plate. Install the nut on the release stud. Be sure the tang on the release stud stays engaged with the slot on the pressure plate while installing the nut. Tighten the nut with the wrench to compress the spring. Continue turning the nut until the spring is fully caged.

Do not loosen or remove the release stud and nut unless the brake chamber is completely assembled and is securely clamped.

REMOVAL AND INSTALLATION

AIR CHAMBER ASSEMBLY

Removal

1. Release all the air from the system, and then disconnect the air lines from the brake chamber.
2. Mechanically cage (compress) the parking brake spring (Fig. 1).
3. Disconnect the push rod yoke from the slack adjuster.
4. Remove the mounting nuts and remove the brake chamber.

Installation

1. Position the brake chamber assembly on the mounting bracket and install the attaching nuts.
2. Connect the push rod yoke to the slack adjuster.
3. Connect the air lines to the brake chamber and build up the air pressure.
4. Reset the parking brake.

DISASSEMBLY AND ASSEMBLY

AIR CHAMBER DIAPHRAGM REPLACEMENT

The service and/or parking brake diaphragm can be replaced without removing the brake unit from the vehicle as follows:

Disassembly

Refer to Fig. 2.

1. Compress (cage) the parking brake spring as described under Mechanical Release of Parking Brake.
2. Remove the parking brake housing-to-adapter clamp.
3. Remove the parking brake housing, spring and pressure plate as an assembly **(the spring, spring housing and pressure plate are serviced as an assembled unit).**
4. Remove the parking brake diaphragm.
5. Remove the adapter-to-service chamber clamp.
6. Remove the adapter and the service brake diaphragm.

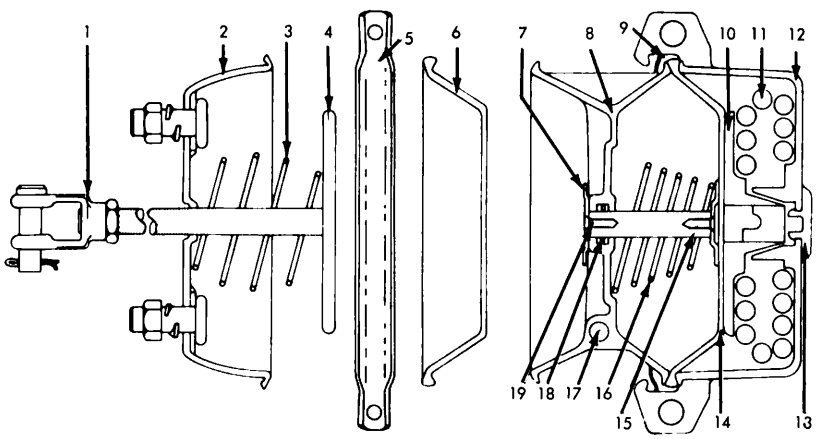

1. CLEVIS ASSEMBLY
2. SERVICE BRAKE HOUSING
3. SERVICE BRAKE DIAPHRAGM RETURN SPRING
4. PUSH ROD ASSEMBLY
5. ADAPTER-TO-SERVICE BRAKE CHAMBER CLAMP
6. SERVICE BRAKE DIAPHRAGM
7. PUSH ROD PLATE
8. ADAPTER
9. PARKING, BRAKE CHAMBER-TO-ADAPTER CLAMP
10. PRESSURE PLATE } (SERVICED
11. COMPRESSION SPRING } AS ONE
12. PARKING BRAKE CHAMBER } ASSEMBLY)
13. RELEASE STUD ACCESS PLUG
14. PARKING BRAKE DIAPHRAGM
15. ADAPTER PUSH ROD
16. PARKING BRAKE DIAPHRAGM RETURN SPRING
17. RELEASE STUD ASSEMBLY
18. O-RING
19. NYLOK SCREW

H1833-A

FIG. 2 Anchorlok Brake Parts Identification

Assembly

1. Position a new service brake diaphragm squarely on the service brake body. Position the adapter assembly on the service brake body and install the adapter-to-service brake chamber clamp. Tighten the clamp bolts evenly.
2. Position a new parking brake diaphragm squarely on the adapter housing. Position the parking brake housing, spring and pressure plate assembly on the adapter housing and install the retaining clamp. Tighten the clamp bolts evenly.
3. Charge the air chambers with air and check for leaks.
4. Remove the parking brake release stud and nut. Replace the release stud and nut in the storage location provided on the brake chamber. Install the access plug in the parking brake chamber.

Steering

GROUP 13

Page

PART 13-01
General Steering Service **13-01-01**
PART 13-05
Steering Column – Shift Rod Above Tube. **13-05-01**
PART 13-06
Steering Column – Shift Rod Within Tube. **13-06-01**
PART 13-07
Steering Column – Floor Mounted Shift Controls **13-07-01**
PART 13-22
Steering Linkage – Power Gear/Power Cylinder **13-22-01**
PART 13-23
Steering Linkage – Power Cylinder/Control Valve **13-23-01**
PART 13-24
Steering Linkage – Manual **13-24-01**
PART 13-33
Manual Steering Gear – Recirculating Ball **13-33-01**

Page

PART 13-34
Manual Steering Gear – Worm and Roller **13-34-01**
PART 13-41
Integral Power Steering Gear – Ford **13-41-01**
PART 13-42
Integral Power Steering Gear–Saginaw **13-42-01**
PART 13-43
Semi-Integral Power Steering Gear – Ross HPS-70 . . . . . **13-43-01**
PART 13-44
Integral Power Steering Gears – Ross HF-54, HF-64 . . . . . **13-44-01**
PART 13-50
Power Steering Pump – Ford-Thompson **13-50-01**
PART 13-51
Power Steering Pumps – Eaton **13-51-01**

PART 13-01 General Steering Service

COMPONENT INDEX Applies to Models as Indicated	All Models	F-100-350, Econoline	F-250-350, Bronco 4 x 4	P-350-500	F-500-750	L-800-9000	LT-LTS-800-9000	B-500-750	LN-500-9000	LNT-800-9000	C-CT-500-900	W-WT-9000
CONTROL VALVE Cleaning and Inspection		N/A	N/A	N/A	N/A	N/A	N/A	N/A	N/A	N/A	01-8	N/A
POWER CYLINDER Cleaning and Inspection		N/A	N/A	N/A	01-8	N/A	01-8	N/A	01-8	01-8	N/A	01-8
POWER STEERING Preliminary Checks	01-01											
POWER STEERING PUMP Cleaning and Inspection	01-04											
Flow and Pressure Tests (Ford-Thompson)		01-02	N/A	N/A	N/A	N/A	N/A	N/A	N/A	N/A	N/A	N/A
Flushing the System (Ford-Thompson)		01-06	N/A	N/A	N/A	N/A	N/A	N/A	N/A	N/A	N/A	N/A
SPECIFICATIONS	01-09											
STEERING GEAR Cleaning and Inspection	01-04											
Lubricant Checking Procedure	01-03											

A page number indicates that the item is for the vehicle(s) listed at the head of the column.
N/A indicates that the item is not applicable to the vehicle(s) listed.

TESTING

When diagnosing steering problems, refer to the Truck Diagnosis Manual for the detailed information on the items that could be causing the problem. The following preliminary checks should be made before proceeding with other diagnosis checks.

POWER STEERING—PRELIMINARY CHECKS

These important preliminary checks should always be made before performing any power steering operations. When performing any service operations on power steering systems which necessitate hose disconnecting, make certain the hoses are tagged prior to removal. It is important that the hoses are reconnected to their correct ports to preclude damage to the system.

PUMP BELT CHECK

If the pump belt is broken or worn, replace it with a new belt. **Use only the specified type of belt. Check the belt tension. An excessively tightened belt causes serious pump wear, and an excessively loose belt results in squeal. Refer to the appropriate power steering section for belt adjustment.**

AIR BLEEDING

Air in the power steering system (shown by bubbles in the fluid) should be bled. Bleeding the air from the power steering fluid is done by exercising the power steering components. After making sure that the reservoir is filled to specification (the fluid must be at normal operating temperature when the

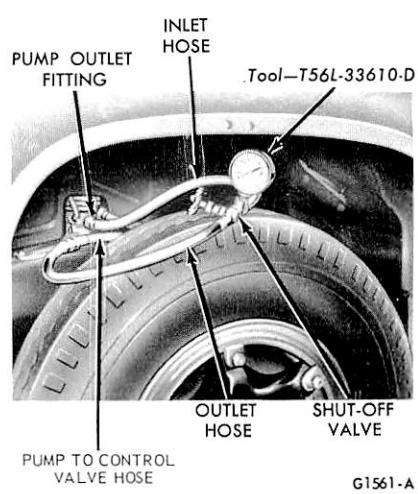

FIG. 1 Pressure Test—Non Integral Steering Gears

check is made), turn the steering wheel through its full travel three or four times. **Do not hold the wheels against their stops.** Recheck the fluid level.

FLUID LEVEL CHECK

Run the engine until the fluid is at normal operating temperature. Then turn the steering wheel all the way to the left and right several times. Make sure that the wheels are in the straight ahead position, then shut off the engine.

Check the fluid level in the power steering reservoir on Ford-Thompson pumps. The level must show on the cross hatching between the bottom of the dipstick and the full mark. If the level is low, add power steering fluid D2AZ-19582-A. **Do not overfill the reservoir.** Remove excess fluid with suction device.

FLUID LEAK CHECK

1. If the power steering fluid does not already include dye, premix one teaspoonful of oil-soluble aniline dye with 2 pints of power steering fluid. Then refill the reservoir with the dye solution.
2. With the engine running at idle speed, turn the steering wheel all the way to the right and to the left several times to distribute the dye solution throughout the hydraulic system. Do not hold the wheels against their stops for more than 5 seconds.
3. Shut off the engine, and check for leaks.

FITTING AND TUBES SEAT LEAK INSPECTION

Since most fluid leaks occur at the fittings and connections in a power steering hydraulic system, these parts should be checked before any other part is replaced.

1. Clean the outside of the integral steering gear and/or the control valve and the power cylinder, the bottom surfaces of the pump, and all lines and fittings. Dirt, oil, and grease should be removed from all areas where leaks may exist.
2. Tighten all fittings, using a special 5-flat tube wrench. **Do not tighten the fittings with a standard open end wrench.** If a properly tightened fitting leaks, replace the seat.

Models	Engine	Front Axle (LB)	Flow-GPM (RPM Specified is Engine Speed)	Pressure Relief Valve Setting ①
L-LT-LTS-800-8000-900-9000 LN-LNT-800-8000-900-9000	FT, Super Duty, Cummins, Detroit Diesel	6-7-9-12000	600 RPM-3.25 (min) 3000 RPM-4.3-5.0	600 RPM-1725 psi (min)
		16-18-20000	600 RPM-4.30 (min) 3000 RPM-7-8	600 RPM-1625 psi (min)
W-WT-9000	Cummins, Detroit Diesel	12-15000	600 RPM-4.30 (min) 3000 RPM 6-7	600 RPM-1350 psi (min)
F-500-750 B-500-750 LN-500-750	FT, I-6	5-5500 6-7000	600 RPM-2.20 (min) 2000 RPM 2.61-3.10	600 RPM-1400 psi (min)
F-6000-7000 B-6000-7000 LN-6000-7000	Cat-Mid Range	5-5500 6-7000	600 RPM 2.70 (min) 2700 RPM 2.75-3.40	600 RPM-1400 psi (min)
F-750 LN-750	FT	9000	600 RPM 2.20 (min) 2000 RPM 3.75-4.25	600 RPM-1250 psi (min)
F-7000	Cat-Mid Range	9000	600 RPM 2.70 (min) 2700 RPM 3.40-4.10	600 RPM-1200 psi (min)
C-500-600-700-750 C-800-C-900 (except 175" W.B.) CT-800-900	EFU, I-6	7-9-12-15000	600 RPM-2.20 (min) 2000 RPM-3.75-4.25	600 RPM-1000 psi (min)
	EFV-W-Y		600 RPM-2.20 (min) 2000 RPM-3.75-4.25	600 RPM-1250 psi (min)
	Super Duty		600 RPM-2.75 (min) 2000 RPM 3.75-4.25	600 RPM-1250 psi (min)
C-6000-7000-8000	Cat-Mid Range		600 RPM 2.70 (min) 2700 RPM 3.40-4.10	600 RPM-1200 psi (min)

① Maximum allowable relief valve setting 175 psi above minimum.

FIG. 2 Power Steering Pump Pressure Relief Valve Settings

PUMP, CONTROL VALVE, AND POWER CYLINDER LEAK INSPECTION

If the fittings and connections do not leak, check the other parts of the system.

PUMP RESERVOIR LEAKS

Leak points at the pump reservoir may be caused by improper installation or by a worn or damaged cover or reservoir gasket. A worn or damaged stud gasket on the stud at the center of the cover or at the rear of the reservoir may also cause leakage.

Pump Leaks (Eaton)

Leakage may occur at the O-rings in the orifices at the top of the pump body. The reservoir must be removed from the pump to replace these O-rings.

Other pump leak points are the shaft seal at the front of the pump, the pump housing O-ring and the flow director O-ring between the two halves of the pump, and the relief valve plug O-ring. Replace only parts as required.

Pump Leaks (Ford-Thompson)

Leak points at the reservoir may be caused by improper installation of the reservoir or by a damaged reservoir O-ring seal. A damaged fitting gasket at the rear of the reservoir may also cause leakage.

Other external pump leak points are the pump shaft seal and pressure fitting.

CONTROL VALVE LEAKS

If the control valve is leaking (somewhere other than the tube seats), replace all the seals, using a control valve seal kit. Use all the parts in the kit, and be sure they are correctly installed.

Some fluid remaining from the manufacturing processes may be found in the sleeve near the ball stud. Do not confuse this fluid with leaking fluid from the hydraulic system.

POWER CYLINDER LEAKS

The power cylinder may leak at the piston rod seal. A power cylinder seal kit should be used to correct leakage. **Do not replace the power cylinder assembly unless the piston rod is scored or has a dull gray finish instead of a high luster chrome finish.**

PUMP-FLUID PRESSURE TEST (EATON PUMP)

A fluid pressure test will show if the pump or some other unit in the power steering system is causing the trouble. The steps below should be used to find the trouble.

1. Measure the pump belt tension. **When adjusting the belt tension on a power steering pump, do not pry against the pump to obtain the proper belt load.**

   A half-inch case boss has been incorporated on the front face of the pump cover plate onto which a 9/16 inch open end wrench can be fitted to pry the pump and obtain the proper belt tension on 6 cylinder engines. On all 8 cylinder engines, leverage should be applied to the pump mounting bracket and the pump pulley hub to obtain the proper belt tension.
2. Disconnect the pressure line hose from the pump outlet, and install a 0-2000 psi pressure gauge (Tool T56L-33610-D) and shut off valve between the end of the hose and the pump outlet (Fig. 1).

   Be sure that the pressure gauge is between the pump and the shut off valve, all connections are tight, and the shut off valve is fully open.
3. Connect a tachometer to the engine.
4. Start the engine and operate it at idle speed for at least two (2) minutes to warm up the fluid.
5. Cycle the steering wheel from stop-to-stop several times to expel any air from the system; stop the engine. Remove the reservoir filler cap and check the fluid level in the reservoir. If necessary, add lubricant (C1AZ-19582-A) to the proper level.
6. With the engine running at approximately 1000 rpm and no steering effort applied, and the lubricant at normal operating temperature, the pressure gauge should show a pressure no greater than 80 psi. If the pressure is higher inspect the hoses for kinks and obstructions.
7. Decrease the engine speed to 600 rpm, then slowly close the gauge shut-off valve. With the valve fully closed, the pump pressure should be to maximum pressure (Fig. 2). **Do not close the valve for more than a few seconds (maximum 5 seconds), as this would abnormally increase the lubricant temperature and cause undue pump and/or steering gear wear. Engine rpm should not exceed fast idle during this test.**
8. If the pressure increases to more than the high limit of the relief pressure range, the pressure relief valve is not operating properly, and a pump overhaul or replacement is indicated.
9. If the pressure, with the shut-off valve fully closed, is less than the minimum relief pressure, the trouble is in the pump. If the pressure increases to the specified relief pressure range, the trouble is somewhere else in the power steering system.
10. After the fluid pressure test is completed, shut off the engine and remove the pressure testing tool and the tachometer. Make the necessary repairs to eliminate the trouble in the system.

FORD-THOMPSON POWER STEERING PUMP FLOW AND PRESSURE TESTS

It is important that the pump flow and pressure tests detailed here be performed before overhaul procedures are undertaken. The malfunction of the steering system should be caused by another component other than the pump. Steps outlined below should be followed to determine if the pump is the cause of the trouble.

PUMP FLOW TEST

1. Depending on the equipment present on the vehicle (air conditioning, power brakes, standard transmission), one of the following options may be used to connect the pump pressure and return hoses (Fig. 3) to the test tool (T56L-33610-D and T68L-33610-A):
   a. Disconnect the pressure and return lines at the power steering pump. Obtain a power steering return hose from stock and connect the end with the fitting to the output fitting of the tool using the 5/8-18 SAE female, 1/4 N.P. thread male fitting provided. The end of the stock hose (without the fitting) should be connected to the return tube of the pump. Connect the pressure hose from the tool to the outlet fitting of the pump.
   b. Disconnect the pressure line at the pump and connect the pressure line from the test tool to the outlet fitting of the pump. Disconnect the return line at the gear and connect it to the output fitting of the tool, using the 5/8-18 SAE female, 1/4 N.P. thread male fitting provided.
2. After installing the lines by the most advantageous method, proceed as follows:
3. Open the manual valves A and B fully.
4. Connect a tachometer, start the engine and operate it at idle speed **until the reservoir fluid temperature reaches 165 degrees to 175 degrees. This temperature must be maintained throughout the test. Valve B may be partially closed to create a back pressure up to 350 psi to hasten the temperature rise. The**

reservoir fluid must be at the proper level.

5. With the engine operating at recommended idle rpm and fluid temperature noted in Step 4, close the manual valve B. The minimum acceptable pressure reading is 620 psi.
6. If the pressure gauge reading is **below** the minimum specification, the pump is at fault and should be repaired with necessary parts.
7. If the reading is **at or above** the minimum specification, the pump flow is normal. Open manual valve B and proceed to the Pump Fluid Pressure Test.

PUMP FLUID PRESSURE TEST

1. Keep the lines and tools connected as in the Pump Flow Test.
2. With manual valves A and B open fully, operate the engine at recommended idle speed. Close manual valve A, then manual valve B. **Do not keep both valves closed for more than 5 seconds as this would abnormally increase the fluid temperature and cause undue pump and/or gear wear.**
3. With the valves fully closed, the pressure gauge should read 1200 psi minimum for F-100, F-250 and F-350 (4 x 2) trucks.
4. If the pressure gauge reading is **below** the minimum specification, the pump is at fault and should be repaired with necessary parts.
5. If the pressure gauge reading is **at or above the minimum specifications, the pump is normal and the power steering gear is at fault.**

ADJUSTMENTS

STEERING GEAR LUBRICANT CHECKING PROCEDURE

F-100, F-250 AND 350 (4 X 2) SERIES MANUAL STEERING

1. Center the steering wheel.
2. Remove the steering gear housing filler plug.
3. Remove the lower cover-to-housing attaching bolt.
4. With a clean punch or like instrument, clean out or push the loose lubricant in the filler plug hole and cover-to-housing attaching bolt hole inward.
5. Slowly turn the steering wheel to left until linkage reaches stop. Lubricant should rise within the cover lower bolt hole; then slowly turn the steering wheel to the right until linkage reaches stop. Lubricant should rise within the filler plug hole. If lubricant does not rise in both the cover bolt hole and the filler plug hole, add lubricant until it comes out both holes during this check.
6. Install the lower cover-to-housing attaching bolt and the filler plug.

ECONOLINE

1. Remove the steering gear housing filler plug.
2. With a clean punch or like instrument, clean out or push the loose lubricant into the filler plug hole. Turn the steering wheel to the left until linkage reaches stop. Then turn the steering wheel slowly to the right until linkage reaches stop. Lubricant should rise in the filler plug hole. If lubricant does not rise in the filler plug hole, add lubricant.

The location of the steering gear does not allow clearance for the removal of a cover bolt for creating a vent. To prevent air from being trapped and forming pockets in the housing while lubricant is being added, it is suggested that a curved length of 1/4 inch tubing be adapted to the end of the grease gun being used. This tube should be inserted into the filler hole and extend down toward the bottom of the housing cavity. By this method, the lower housing cavity will fill first and as lubricant is added, air will be expelled upward and out the filler hole.

To add lubricant, turn the steering wheel to the extreme left to position the ball nut away from the filler plug hole and fill gear by method described above until lubricant rises in the filler plug hole.

F-100 Four-Wheel Drive, Bronco

1. Remove the filler plug from the sector shaft cover.
2. Check to see if the lubricant level is visible in the filler plug-tower. If the lubricant is visible, install the filler plug. If the lubricant is not visible, add fluid as outlined in Step 3.
3. Add steering gear lubricant until the lubricant level is visible approximately 1 inch from the top of the hole in the filler plug tower; then, install the filler plug.

ALL MODELS—500 THRU 9000, F-250 FOUR-WHEEL DRIVE AND P-SERIES WITH MANUAL STEERING

1. Remove the filler plug from the top of the steering gear housing.
2. Check the lubricant level. If the level is to the bottom of the filler plug

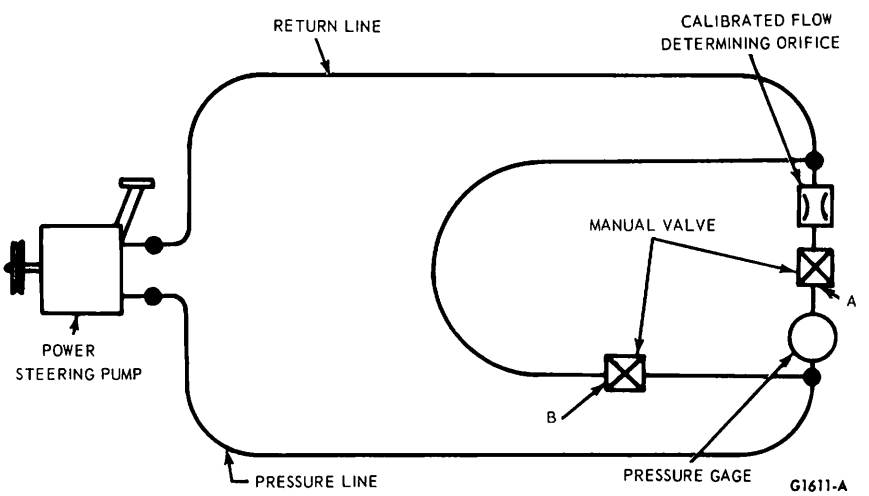

FIG. 3 Power Steering Pump Test Circuit Diagram

opening, install the filler plug. If the level is not to the bottom of the filler plug hole, add fluid to raise the level to that level. **Do not use a pressure gun as it could damage the seals in the gear.** The Model 504 manual gear when used on L and W-Series trucks are equipped with drain plugs to facilitate servicing.

ROSS SEMI-INTEGRAL POWER STEERING GEAR

1. Remove the uppermost filler plug from the gear housing.
2. Fabricate a 90 degree x 3/8 male x 3/8 female pipe elbow and install in the filler plug hole of the gear as shown in Fig. 4.
3. Add specified lubricant into the open end of the elbow until visible.
4. Install the plug removed in Step 1 in the 3/8 female hole of the fabricated elbow.

CLEANING AND INSPECTION

MANUAL STEERING GEAR

Do not clean, wash or soak seals in cleaning solvent.

Wash all steering gear parts in a cleaning solvent. Then wipe them dry with a lint-free cloth.

Check for scores, chips, or cracks in the worm. Check the steering shaft for straightness. Check the condition of the splines and threads at the end of the shaft. Inspect the worm bearing seats for wear or irregular surfaces. Replace the shaft and worm if wear or damage is present.

Inspect the sector shaft. Check the roller for scores, chips, or cracks. Check the condition of the sector shaft at the bushing locations. Replace the sector shaft assembly if any of these parts are worn or damaged.

Inspect the worm roller or ball bearings, and the sector shaft bushings or roller bearings for wear or damage. Inspect the worm bearing cup for pits, scores, or other damage. Replace the parts that are worn or damaged.

Inspect the steering gear housing, the sector shaft cover, and the housing end plate for cracks or other damage, and replace the parts if necessary.

ROSS SEMI-INTEGRAL POWER STEERING GEAR

Clean all parts in cleaning solvent. Then, wipe them dry with a clean lint free cloth. **Do not steam clean the steering gear.** Be careful not to nick the parts or allow them to bump together during the cleaning process.

Check the cam groove for chipping, scoring or other damage. The operation of the stud in the cam groove will wear away the copper plating on the cam. This is a normal condition and the cam does not require replacing. Check the condition of the bearing surfaces at each end of the cam.

Check the sector shaft for burrs on the splines, twisted splines and wear on the bearing surfaces. Check the stud for nicks, flat spots or chipped roller bearings. Check the adjustment of the stud roller bearing.

Check the gear housing for strain at the mounting flanges. Check the condition of the needle bearings in each end of the housing and the fit of the cam in the needle bearings. Check the sector shaft bushings for wear or out-of-round condition.

Check the actuator, actuator housing, bearings, and thrust washers for wear or other damage.

POWER STEERING PUMP

EATON

Wash all pump and reservoir parts in a cleaning solvent, and wipe them dry with a lint-free cloth.

Inspect the pump housing and cover for wear caused by turning of the rollers and the carrier. Check the carrier shaft bearings in the housing and the cover for wear or scores. Replace the bearings if necessary.

Inspect the carrier, shaft, and rollers for wear or any kind of damage. If there is wear or damage, replace the appropriate part(s). **A damaged roller, carrier, or insert should not be serviced alone; these parts are serviced in a kit, and all parts of the kit should be used.** If the retaining ring on the carrier shaft is bent or broken, replace it.

Be sure the valve assembly and its bore are dry. Insert the valve in the housing, and check for free movement of the valve in the bore. Using crocus cloth, remove any burrs from the valve.

Inspect the carrier shaft seal in the pump housing for wear or damage. If there is wear or damage, carefully remove the seal with a punch, avoiding damage to the shaft bushing. **Remove the seal only for replacement.**

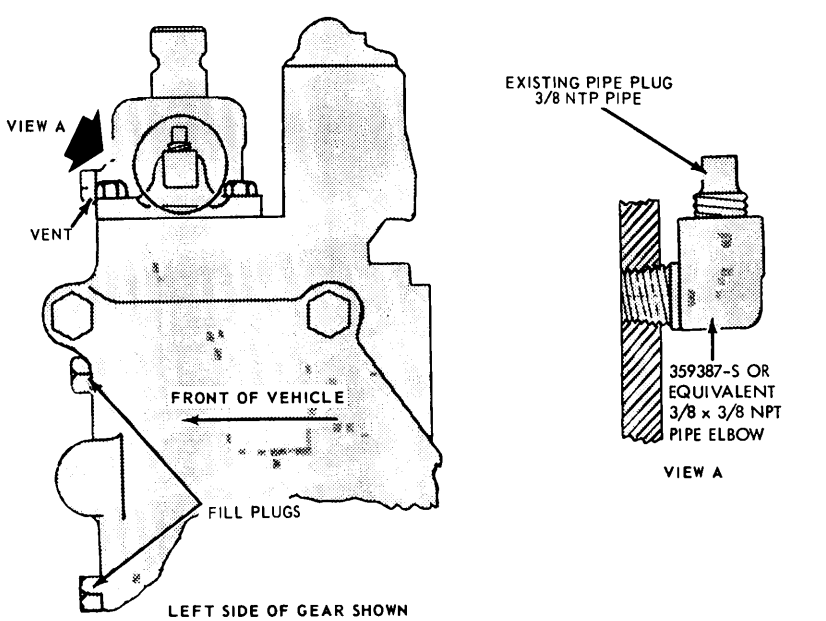

FIG. 4 Ross HPS-70 Steering Gear Lubricant Fill—W-Series

FORD-THOMPSON

Wash all parts (except seals) in a Naphtha or Chlorinated type solvent and dry with compressed air.

The following procedure should be followed when cleaning the relief valve which is a part of the pump valve assembly.

1. Using a punch or rod of suitable diameter, apply an even pressure in a straight line to the tip of the relief valve pin (Fig. 5). Depress the valve two or three times to exhaust the oil which is trapped in the assembly. Do not hammer on the valve pin or housing.
2. Submerge the assembly in a container of **clean** solvent. Again applying an even pressure to the tip of the relief valve pin, (a sudden strong force could push the pin through the relief valve spool) move the valve in and out several times, thereby thoroughly flushing the assembly. Pressure created within the valve bore when the valve is moved inward should force the cleaning fluid out through the sensing orifice. If this does not occur, the sensing orifice should be cleaned with a piece of wire. The valve must move freely and evenly. If the pin is bent or damaged, or if the valve binds, the pump valve must be replaced.

The following describes the components of the power steering pump which must be replaced **regardless of condition and replacd regardless of condition** and how to determine when other components should be replaced.

The outlet fitting hex nut may be reused if the corners of the hex are not rounded. The housing bolts may be reused if the threads are not damaged.

All gaskets and seals must be replaced with new components except the rotor shaft seal which should be reused unless it was leaking.

The reservoir assembly may be reused if the reservoir seal and gasket areas are not damaged (scratches, dents, etc). The soldered joints of the return and fill tubes must not be loose or bent. Be sure to check for a broken baffle.

The housing or housing assembly may be reused if there is no damage (scratches, etc) at reservoir gasket, outlet fitting or cover seal areas.

If the outlet fitting is damaged, the pump housing must be replaced. The pressure plate springs may be reused providing they are not bent, broken or have not taken a set.

Do not reuse the retainer end plate if it is burred or damaged. The upper pressure plate may be reused if there is no scoring on the wear surface. It is acceptable to polish the phosphate coating.

The rotor and cam assembly can be reused if there is no wear other than the removal of the phosphate coating on the cam contour. Do not disassemble the rotor and cam assembly. Push the rotor part way out the cam insert taking care not to let the slippers and springs fall out. Check the cam ID for scoring and burning. Check the rotor faces and OD for scoring and chipping. Do not attempt to repair or refinish the lower and upper pressure plates, cam or rotor assembly. When wear or burning is encountered, replace them with new components.

Install a new rotor and cam assembly if the slippers are worn. Replace the springs if they are bent or broken. Polishing the phosphate coating of the slipper sealing surface is permissible.

The rotor shaft can be reused if the front and rear thrust faces, the bushing diameter and the shaft seal diameter are not excessively worn or scored.

The housing plate and bushing assembly may be reused if all of the threaded holes are not damaged beyone repair and the bushing diameter is not scored or worn .0005 inch over the maximum dimension of .6897 inch. Threaded holes can be repaired by drilling out the damaged threads and installing a heli-coil insert. If the bushing is scored or excessively worn, a new plate and bushing assembly must be installed.

With Tool T69P-3D608-A (using a dial indicator) check the squareness of the fixed dowel pin in the plate (Fig. 6). The pin must be square with the adjacent surface within .001 inch per inch through a 180 degree arch.

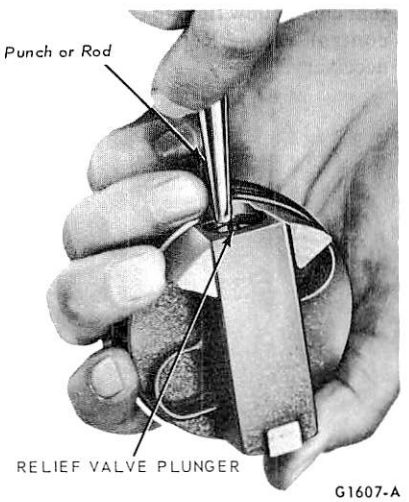

FIG. 5 Cleaning Pump Relief Valve



FIG. 6 Dowel Pin Squareness Check

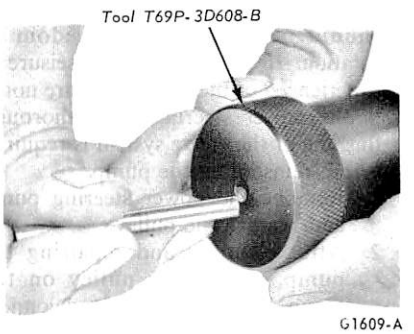

FIG. 7 Dowel Pin Insertion

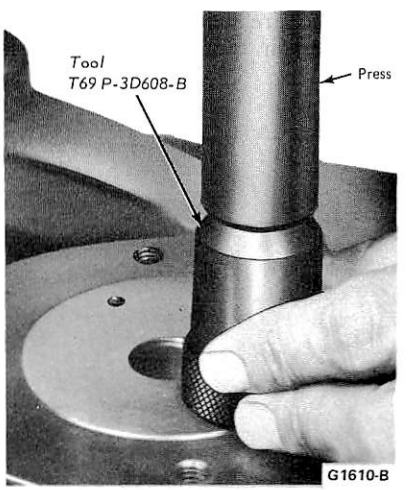

FIG. 8 Replacing Dowel Pin

A bent or broken dowel pin can be replaced as follows:

1. Hold the plate assembly in a horizontal position and grip at least an inch of the dowel pin in a vise. Tap the plate with a plastic or a rubber hammer to pull the pin from the plate.
2. Insert the support guide (Tool T69P-3D608-B) over a dowel pin (Fig. 7) and press the pin into the plate to a height of 1.68 inch. (See Fig. 8). The support guide tool will serve as a stop guide. Be careful not to bend the new dowel pin during installation.
3. Again use Tool T69P-3D608-A (with a dial indicator) to check the dowel pin squareness as outlined above.

FLUSHING THE POWER STEERING SYSTEM (WITH FORD—THOMPSON PUMP)

Should a power steering pump become inoperative, the shaft and pulley should be checked for freedom of rotation. If a pump bind or seisure is experienced or metal particles are noted in the power steering fluid, thorough flushing of the entire system is required before reinstalling the pump.

1. Remove the power steering pump and remove the pulley.
2. After cleaning and repairing the pump, install the pulley on the pump. Install the pump and connect only the pressure hose to the pump.
3. Place the fluid return line in a suitable container and plug the reservoir return pipe at the pump.
4. Fill the reservoir with fluid (C1AZ-19582-A).
5. Disconnect the coil wire to prevent the engine from starting and raise the front wheels off the ground.
6. While approximately two quarts of fluid are being poured into the reservoir, turn the engine over using the ignition key, at the same time cycle the steering wheel from stop to stop.
7. As soon as all of the fluid has been poured in, turn off the ignition key, and attach the coil wire.
8. Remove the plug from the reservoir return pipe, and attach the return hose to the reservoir.
9. Check the reservoir fluid level; if low, add fluid to the proper level. **Do not overfill.**
10. Lower the vehicle.
11. Start the engine and cycle the steering from stop to stop to expel any trapped air from the system.

POWER STEERING POWER CYLINDER

After cleaning the outside of the power cylinder and piston rod, wipe the parts dry.

Inspect the cylinder and piston rod for wear or damage. The internal parts of the cylinder, except the seal assembly and hose seats, and the rod cannot be repaired or replaced. If either the cylinder or rod is worn or damaged, or if the piston is leaking internally, the entire lower cylinder assembly must be replaced as a unit. The cylinder seals and hose seats are replaceable.

Inspect the mountings bushings and insulators for wear or damage, and replace them if necessary.

POWER STEERING CONTROL VALVE

Thoroughly clean all parts of the control valve assembly, and inspect them for wear or damage. **Do not use cloth waste to wipe the parts.**

Inspect the control valve seals for wear or damage. Examine the lips of the seals carefully for nicks or scratches that could allow fluid to escape from the control valve. Replace the seals if necessary.

Inspect the control valve spool carefully for burrs and scoring. Remove the burrs with crocus cloth. Do not round off the sharp edges on the spool as the operation of the valve may be affected.

Inspect the control valve housing for burrs and scored or damaged surfaces.

Remove the burrs with crocus cloth. Dry the valve spool and housing thoroughly, and insert the spool in the housing. The spool should fall freely of its own weight through the housing.

Inspect the mating surfaces of the inner and outer sleves for wear or damage. The surfaces should be free of burrs and scores. Minor burrs and scores may be removed with crocus cloth. Prior to assembly, the outer diameter of the inner sleeve should be coated with C1AZ-19590-B grease. Check the fit of the inner sleeve in the outer sleeve (Fig. 9). The inner sleeve should slide freely in the outer sleeve.

Check the ball stud seats and spring for wear or damage, and replace them if necessary.

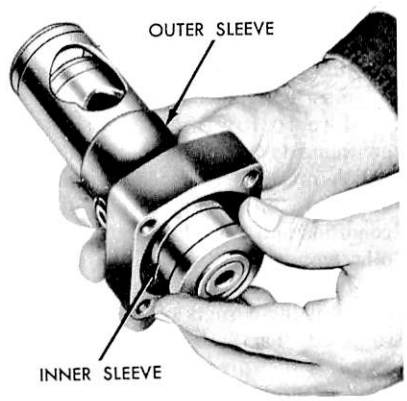

FIG. 9 Checking Sleeve Movement

SPECIFICATIONS

SPECIAL SERVICE TOOLS

Tool No.	Description
T56L-33610-D	Pressure Testing Gauge Assembly
T68L-33610-A	Bypass and Orifice Gauge
T69P-3D608-A	Pin Straightness Checking Block
T69P-3D608-B	Pin Guide Support

STEERING TORQUE LIMITS–F-100 THRU 350, ECONOLINE, BRONCO, P-SERIES

Description	Model	Torque Ft-Lb
Steering Gear to Frame	Bronco, F-100 (4 x 4) Econoline, F-100 thru F-350, P-Series, F-250 (4 x 4)	60–80 50–65
Pitman Arm to Steering Gear	Bronco, F-100 (4 x 4) F-100 Thru F-350 F-250 (4 x 4), P-Series Econoline	105–135 170–230 130–170 230–280
Drag Link Studs	E-100, E-200 Other	45–55 60–75
Spindle Connecting Rod Studs	F-100 thru F-350, P-Series, E-300 E-100, E-200	60–75 45–55
Spindle Connecting Rod Clamps	E-100, E-200, F-100, F-250 E-300, F-350	35–45 40–60
Idler Arm to Support Bracket	Econoline	105–145
Steering Shock Absorber to Brackets	Bronco, F-100 (4 x 4)	15–25
Steering Shock Absorber to Frame	Bronco, F-100 (4 x 4)	10–15
Steering Shock Absorber Bracket Drag Link	Bronco, F-100 (4 x 4)	10–15
Steering Shaft or Coupling Shaft to Steering Gear	Bronco, F-100 & F-250 (4 x 4)	35–45
Coupling Shaft to Upper Steering Shaft	F-100 & F-250 (4 x 4)	45–60
Steering Wheel to Steering Column	All	45–55
Steering Column Supporting Bracket to Dash Panel	Bronco, F-Series	10–15
Steering Column Seal Cover Plate to Dash	Bronco, F-Series	5–8
Steering Column Lower Clamp to Steering Column Support Bracket at Dash	Bronco, F-Series	12–18
Steering Column Opening Cover Plate to Floor	Econoline	4–6
Steering Column to Floor Opening Cover Plate Clamp	Econoline	4–6
Flange & Insulator Assembly to Steering Column	Econoline, F-Series (4 x 2)	12–16
Flange & Insulator Assembly to Steering Gear	Econoline, F-Series (4 x 2)	28–35
Steering Column to Steering Column Upper Bracket	Econoline	10–14
Steering Column Upper Support Bracket to Instrument Panel	Econoline	10–15
Steering Column Lower Bearing Retainer Clamp	Bronco, F-Series	Manual 10–14 Power 4–6
Steering Column to Clutch and Brake Pedal Bracket	Bronco, F-Series	10–15
Power Steering Adjusting Bracket to Engine	F-100, 250 (6 cyl)	40–50
Power Steering Adjusting Bracket & Support to Engine	F-100, 250	40–50
Power Steering Pump Assembly to Bracket	F-100, 250 F-350	40–50 15–20
Power Steering Adjusting Bracket to Engine	F-350	40–50
Power Steering Support Bracket to Adjusting Bracket	F-350	40–50
Power Steering Oil Cooler to Compressor	F-350	20–30
Power Steering Support Bracket to Engine	F-350	40–50

STEERING SYSTEM TORQUES–ALL 500 & UP (MED., HVY., EX. HVY) TRUCKS

	THREAD SIZE AND TORQUE (FT-LBS)															
Application	1/4-20	5/16-18	3/8-16	3/8-24	7/16-14	7/16-20	1/2-13	1/2-20	9/16-18	5/8-11	5/8-18	3/4-20	7/8-14	1-14	1 1/8-12	1 1/4-12
Steering Wheel Nut											30-55③	35-55 ③				
Column To Bracket-Tapped Thru					31-42①	31-42③										
Column To Dash or Clutch Bracket		12-17		31-42③												
Column To Retainer		12-17														
Column Retainer To Floor		7–10														
Inter Shaft Pinch Bolts			31-42①⑤	31-42①②												
Gear To Frame or Mounting Brkt					50-70①⑤	50-70①⑤	75-105①②	75-105①③		④150-205①③	150-205①④	220-300②				
Pitman and Idler Arm Pinch Bolt											150-205③	220-300③				
Ball Stud To Arm											50-70③	75-105③	110-150③			
Idler Shaft														31-42 ③		
Idler Bracket To Frame								75-105								
Hose Clips and Mountings	7–10	12-17	31-42													
Pump or Reservoir To Engine		7–10	20-29		31-42											
Reservoir Mounting-Non Engine		12-17														
Cylinder Bracket To Frame									110-150		150-205③					
Cylinder To Clam Shells											50-70					
Ball Stud To Cylinder			31-42													
Pitman Arm Stop Bolts			31-42	31-42		31-42										
Pitman Arm Stop Bolts Bracket			31-42				50-70									
Arms To Spindle														220-300③	360-480③	540-730③
Tie Rod Clamps								31-42			50-70					
Arm To Spindle Bolt									115-135②							
King Pin Lock						31-42										
King Pin Cap		12-17														
Cylinder to Tie Rod and Axle									50–70③		75–105③					
Gear to Pump							50–70									
King Pin Nut (Service)															360–480①	
Stop Bolts - Axle					20-29		12-17	31-42	50-70		50-70					
Intermediate Shaft (Hex) Stop Bolt		12-20														

①Lock Tabs ②Advance for pin if necessary ③Stake nut ④110–150 for W-Series Alum. Brkt ⑤Back off to give .001–.010 play

CG1697-D

PART 13-05 Steering Column-Shift Rod Above Tube

Applies To Econoline, P-Series Only			
COMPONENT INDEX	**Page**	**COMPONENT INDEX**	**Page**
STEERING COLUMN		Description	05-01
Alignment	05-02	Removal and Installation	05-03

DESCRIPTION

STEERING COLUMN

The Econoline and P-Series vehicles are equipped with columns which have a shift control rod mounted separately above the column tube (Figs. 1 and 2).

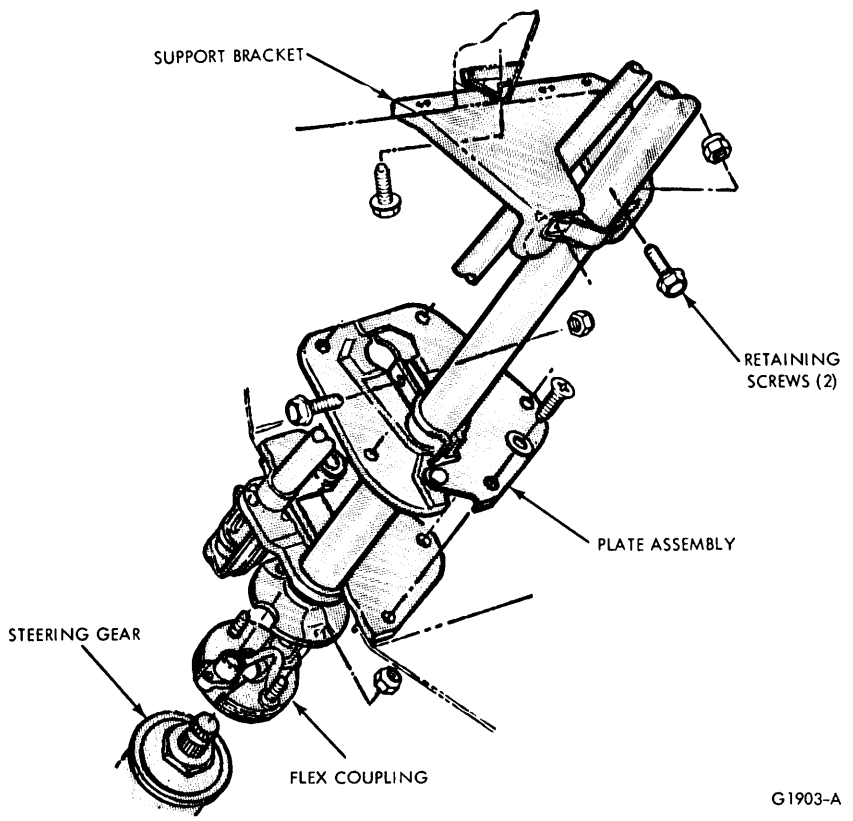

FIG. 1 Steering Column Installation—Econoline

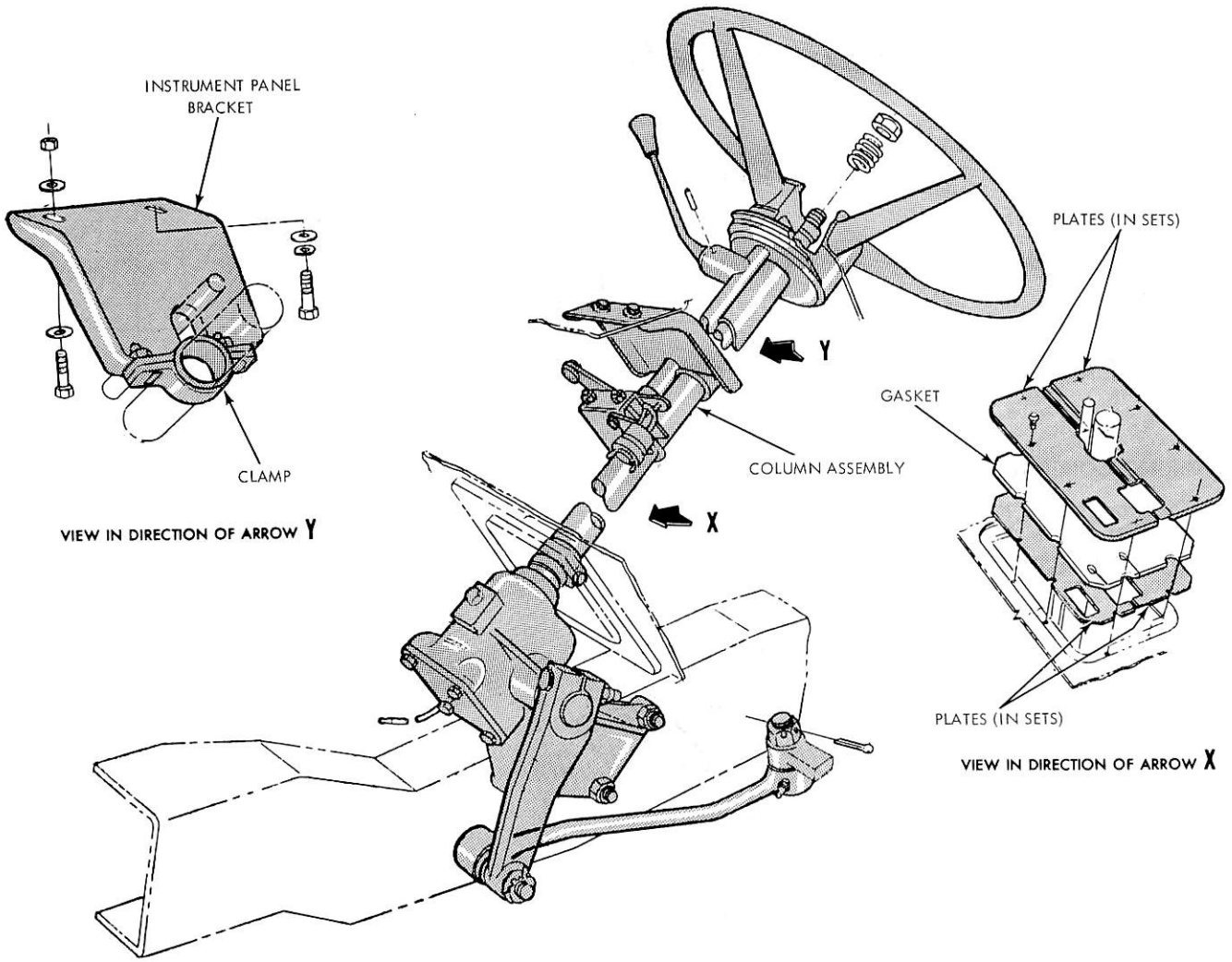

FIG. 2 Steering Column Installation—P-Series

ADJUSTMENTS

STEERING COLUMN

Steering column misalignment can cause hard steering or failure of the flexible coupling. It is therefore important to check steering column alignment before attempting to diagnose steering problems or whenever a steering gear or column has been replaced.

1. Raise the front end of the vehicle and position safety stands under the front axle.
2. Remove the horn button or ring and connect an in-lb torque wrench as shown in Fig. 3.
3. If the torque required to turn the steering wheel exceeds the specification a binding condition exists and the steering column and/or gear must be adjusted.

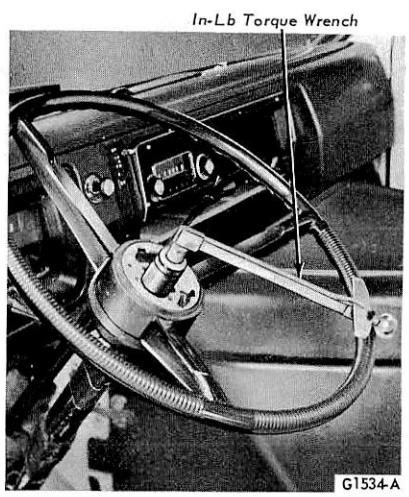

FIG. 3 Checking Steering Shaft and Gear Turning Effort

REMOVAL AND INSTALLATION

ECONOLINE

Removal

1. Disconnect the horn, turn signal and back-up light wires.
2. Remove the steering wheel.
3. Disconnect the shift rods at the column shift levers.
4. Disconnect the flex coupling to the steering gear.
5. Remove the clamp retaining the column to the support bracket on the instrument panel (Fig. 1).
6. Remove the five screws retaining the plate assembly to the floor pan.
7. Remove the bolt and nut from the plate assembly clamp.
8. Lift the column from the vehicle.

Installation

1. Position the column in the vehicle.
2. Install the column bracket retaining screws to the support bracket on the instrument panel.
3. Align the flex coupling to the steering gear and install the retaining nuts.
4. Install the five screws retaining the plate assembly to the floor pan.
5. Install the bolt and nut into the plate assembly clamp.
6. Connect the shift rods to the column shift levers.
7. Install the steering wheel.
8. Connect the back-up light, turn signal and horn wires.

P-SERIES

Removal

1. Disconnect the horn, turn signal and back-up light wires.
2. Remove the steering wheel.
3. Disconnect the shift rods at the column shift levers.
4. Disconnect the steering column to the steering gear.
5. Remove the two clamp bolts and nuts retaining the column to the instrument panel bracket.
6. Remove the eight screws attaching the four plates and gasket to the floor pan (Fig. 2).
7. Lift the steering column out of the vehicle.

Installation

1. Position the column in the vehicle.
2. Attach the column to the steering gear.
3. Install the eight screws attaching the plates and gasket to the floor pan.
4. Install the two bolts and nuts to attach the steering column to the instrument panel bracket.
5. Connect the shift rods to the column shift levers.
6. Install the steering wheel.
7. Connect the horn, turn signal and back-up light wires.

SHAFT BUSHING

Removal and Installation

1. Remove the steering column as described earlier.
2. Remove the outer snap ring from the steering shaft and pull the shaft out of the tube. The inner snap ring will pull the bushing assembly from the steering tube as the shaft is withdrawn.
3. Remove the inner snap ring. Remove and discard the lower bushing assembly.
4. Apply a coat of Lubriplate type lubricant to the inside (cone shaped) area of the new bushing and slip it over the steering shaft with the conical area facing the top of the steering shaft.
5. Install the inner snap ring on the shaft, insert the shaft and bushing into the steering column and retain them with the outer snap ring.
6. Install the steering column as described earlier.

PART 13-06 Steering Column-Shift Rod Within Tube

Applies To F-100–350, Bronco Only

COMPONENT INDEX	Page	COMPONENT INDEX	Page
SHIFT TUBE		STEERING COLUMN - Cont.	
Removal and Installation	06-03	Description	06-01
STEERING COLUMN		Removal and Installation	06-02
Alignment	06-02		

DESCRIPTION

STEERING COLUMN

The F-100-350 and Bronco vehicles are equipped with columns which are designed with the shift tube within the column tube (Figs. 1 and 2).

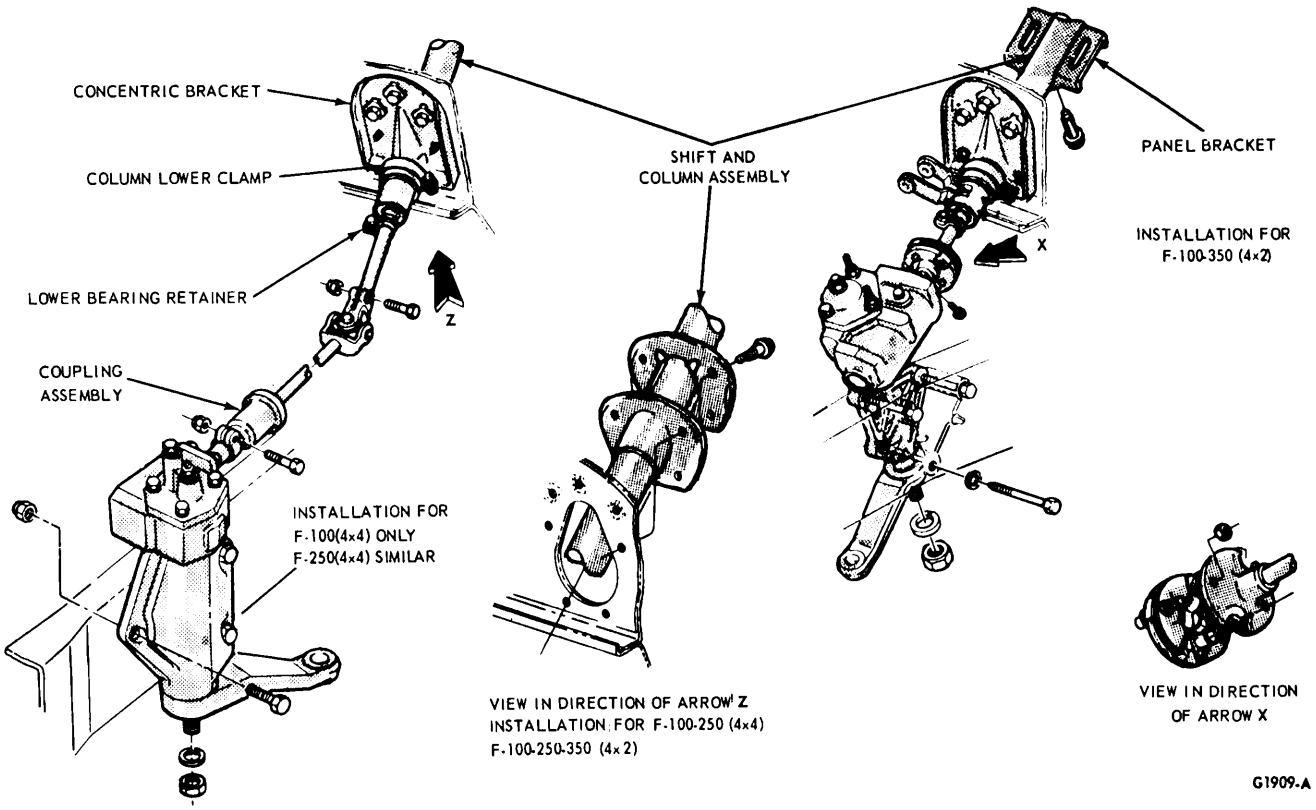

FIG. 1 Steering Column Installation F-100-350 (4 x 2), F-100-250 (4 x 4)

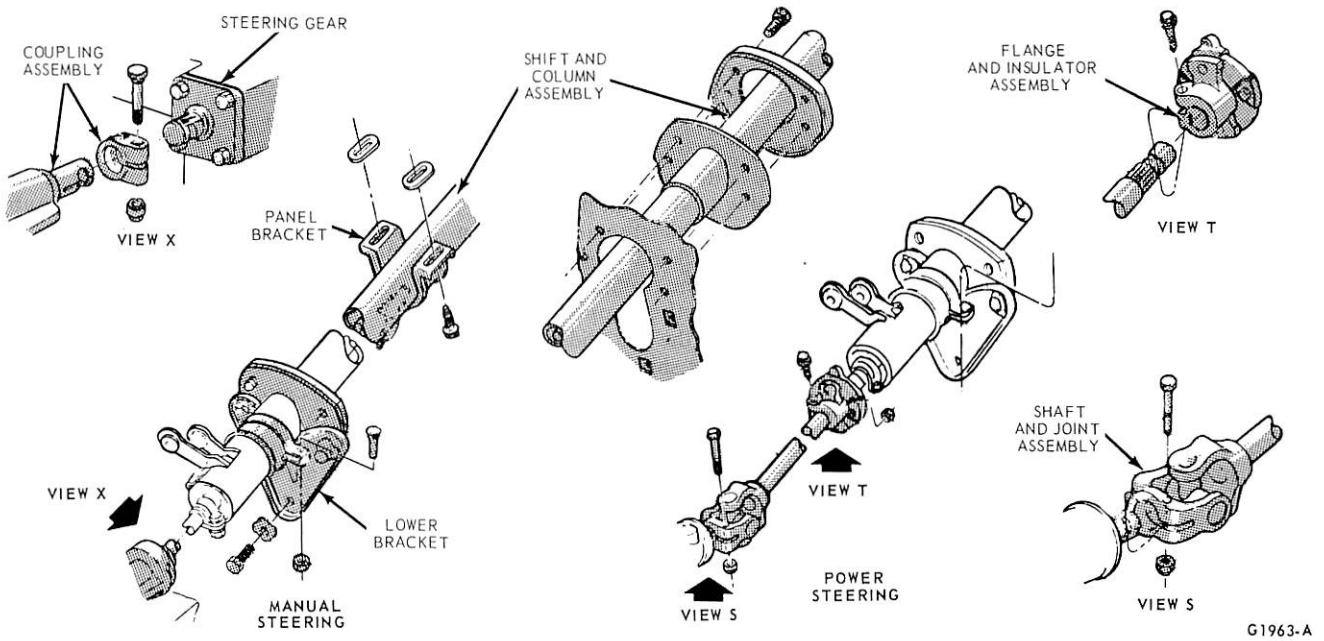

FIG. 2 Steering Column Installation Bronco

ADJUSTMENTS

STEERING COLUMN ALIGNMENT—F-100 THRU 350

Before checking the steering gear adjustments, eliminate any steering column tube and steering shaft stresses or misalignment as follows:

1. Loosen the screws attaching the steering column to the instrument panel, the column lower clamp, the concentric bracket bolts and the lower bearing retainer (Fig. 1).
2. Position the concentric bracket and torque the attaching bolts to 12-18 ft-lbs.
3. The front wheels must be in a straight ahead position. With the fabric insulator of the flexible coupling held in a flat plane, pull the steering column (inside the cab) upward until the gap between the lower edge of the steering wheel hub and steering column is .03 to .06 inch.
4. Tighten the steering column bracket-to-instrument panel screws and torque to 10-15 ft-lbs. On units with power steering, torque the two set screws to 4-6 ft-lbs.
5. Slide the lower bearing retainer up against the lower bearing and torque the nut and bolt to 10-15 ft-lbs.
6. Check the flexible coupling for the minimum clearance between the slots and coupling pins (.073 inch minimum either side). Tighten the steering column clamp bolt and nut and torque to 18-25 ft-lbs.
7. Road test the vehicle to check for correction of problem.
8. Recheck the flexible coupling to verify the slot and coupling pin clearance specification.

REMOVAL AND INSTALLATION

STEERING COLUMN

F-100-250 (4 X 4), F-100-250-350 (4 X 2)

Removal

1. Disconnect the ignition switch wire connector, back-up light wires and neutral start switch (if so equipped).
2. Remove the horn switch steering wheel.
3. Disconnect the shift rods at the column shift levers (if so equipped) (Fig. 1).
4. Disconnect the flex coupling or coupling assembly (Fig. 1) at the steering gear.
5. Remove the two screws retaining the column to the instrument panel.
6. Remove the three bolts (from the engine compartment) and four screws (cab side) that retain the column bracket to the floor pan.
7. Loosen the clamp that retains the column bracket to the column.
8. Lift the column out of the vehicle.

Installation

1. Position the column in the vehicle.
2. Install the two screws retaining the column to the instrument panel.
3. Align the flex coupling or coupling assembly to the steering gear and install the retaining nut(s).
4. Install the three bolts (from the engine compartment) and four screws (cab side) to retain the column bracket to the floor pan.
5. Secure the column to the column bracket with the column bracket clamp.
6. Connect the shift rods to the shift levers (if so equipped).

7. Install the steering wheel on the steering shaft. The gap between the lower edge of the steering wheel hub and the steering column should be .03 to .06 inch. The column should be loosened, if necessary, to obtain this specification.
8. Connect the horn switch, back-up light wires and ignition switch wire connector (if so equipped).

BRONCO

Removal

1. Disconnect ignition switch wire connector and back-up light wires.
2. Remove two screws retaining the safety pad and horn ring. Remove both components.
3. Remove the steering wheel.
4. On units with manual steering, remove the coupling assembly retaining bolt and nut. On units with power steering, remove the flange and insulator pinch bolt (Fig. 2).
5. Disconnect the shift rods at the column shift levers.
6. Remove the clamp retaining the column to the support bracket on the dash panel.
7. Remove the five nuts retaining the column support bracket, rubber dust seal and plate assembly to the dash panel.
8. Remove the four screws retaining the trim cover. Remove the trim cover.
9. Remove the four column-to-upper support bracket retaining bolts.
10. Remove the four bolts retaining the column upper support bracket to obtain clearance.
11. Remove the plate and dust seal assembly from the dash panel and remove the column assembly.

Installation

1. On manual steering units, position the column through the opening in the instrument and dash panels and align the flex coupling to the gear. Install the clamp bolt and nut and torque to 35-45 ft-lb. On power steering units, install the pinch bolt into the flange and insulator assembly and torque to 28-35 ft-lb.
2. Install the back-up light switch on the column.
3. Position the upper column support brackets and install the four retaining bolts finger tight.
4. Install and tighten the four column bracket-to-support bracket bolts and nuts.
5. Position the rubber seal and plate assembly to the dash panel.
6. Position the steering column support bracket to the plate studs and install the five nuts. Install the column to the support bracket clamp with the bolt and nut.
7. Connect the shift rods to the shift levers and install new retaining clips.
8. Position the trim cover to the instrument panel and install the four retaining screws.
9. Install the steering wheel on the steering shaft. The gap between the lower edge of the steering wheel hub and the steering column should be .03 to .06 inch. The column should be loosened, if necessary, to obtain this specification.
10. Install the horn ring and the safety pad with its two screws.
11. Connect the back-up light and ignition switch wire connector.
12. Start the engine and check the shift operation.

SHIFT TUBE

Removal and Installation

1. Working from under the instrument panel, disconnect the ignition switch wire connector.
2. Remove the steering wheel, bushing and the spring from the steering column.
3. Carefully remove the pin that secures the selector lever to the hub and remove the lever.
4. If working on a vehicle equipped with an automatic transmission, remove the neutral start switch from the shift tube.
5. Loosen the two flange attaching nuts enough to apply pressure on them (toward the center) to release the bolt heads from the steering column tube.
6. Carefully work the flange and selector hub and wires over the upper end of the steering shaft.
7. Slip the shift tube out of the steering column.
8. Apply lubricant to each end of the new shift tube.
9. Slip the shift tube into the upper end of the steering column making sure that the lower end of the tube engages shift lever or levers.
10. Place the selector lever hub and flange on the steering column tube and carefully pull the wires downward into place.
11. Engage the flange attaching bolt heads into the steering column tube and tighten the two nuts.
12. Place the steering shaft bushing and spring on the steering shaft and install the steering wheel.
13. If working on a vehicle equipped with an automatic transmission, install the neutral start switch actuator.
14. Connect the ignition switch wire connector.
15. Adjust the shift rods as required.

PART 13-07 Steering Column-Floor Mounted Shift Control

Applies to F-, B-, C-, CT-, L-, LT-, LTS-, W- and WT-Series (500 and up) Only

COMPONENT INDEX	Page	COMPONENT INDEX	Page
ADJUSTABLE COLUMN BRACKET		INTERMEDIATE STEERING SHAFT	
Removal and Installation	07-04	Disassembly and Assembly	07-06
ADJUSTABLE COLUMN LATCH MECHANISM		STEERING COLUMN	
		Description	07-01
Removal and Installation	07-05	Disassembly and Assembly	07-06
		Removal and Installation	07-04

DESCRIPTION

STEERING COLUMN

The F-B-500-7000, C-CT-Series and W-WT-9000 trucks are equipped with steering columns (Figs. 1, 2 and 3) which do not have shift controls. Shift controls on these vehicles are floor mounted.

The L-Series trucks are equipped with unique steering columns which, as an option, can be adjusted fore and aft controlled by a manual lever. The column has a column assembly and an intermediate shaft which connects to the steering gear (Fig. 4). These trucks also have floor mounted shift controls.

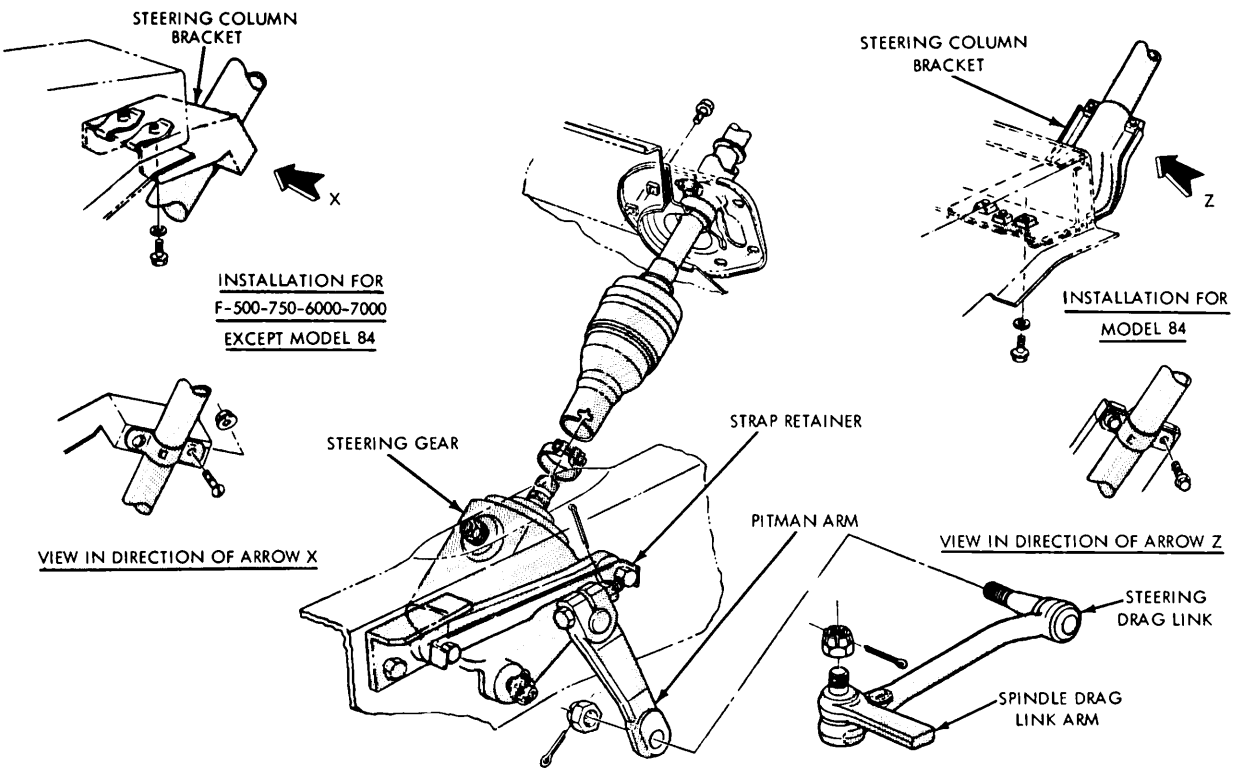

FIG. 1 Steering Column Installation—F-B-500-750, F-B-6000-7000 Attachment (Manual Steering)—Power Steering Similar Except for Shaft-to-Gear

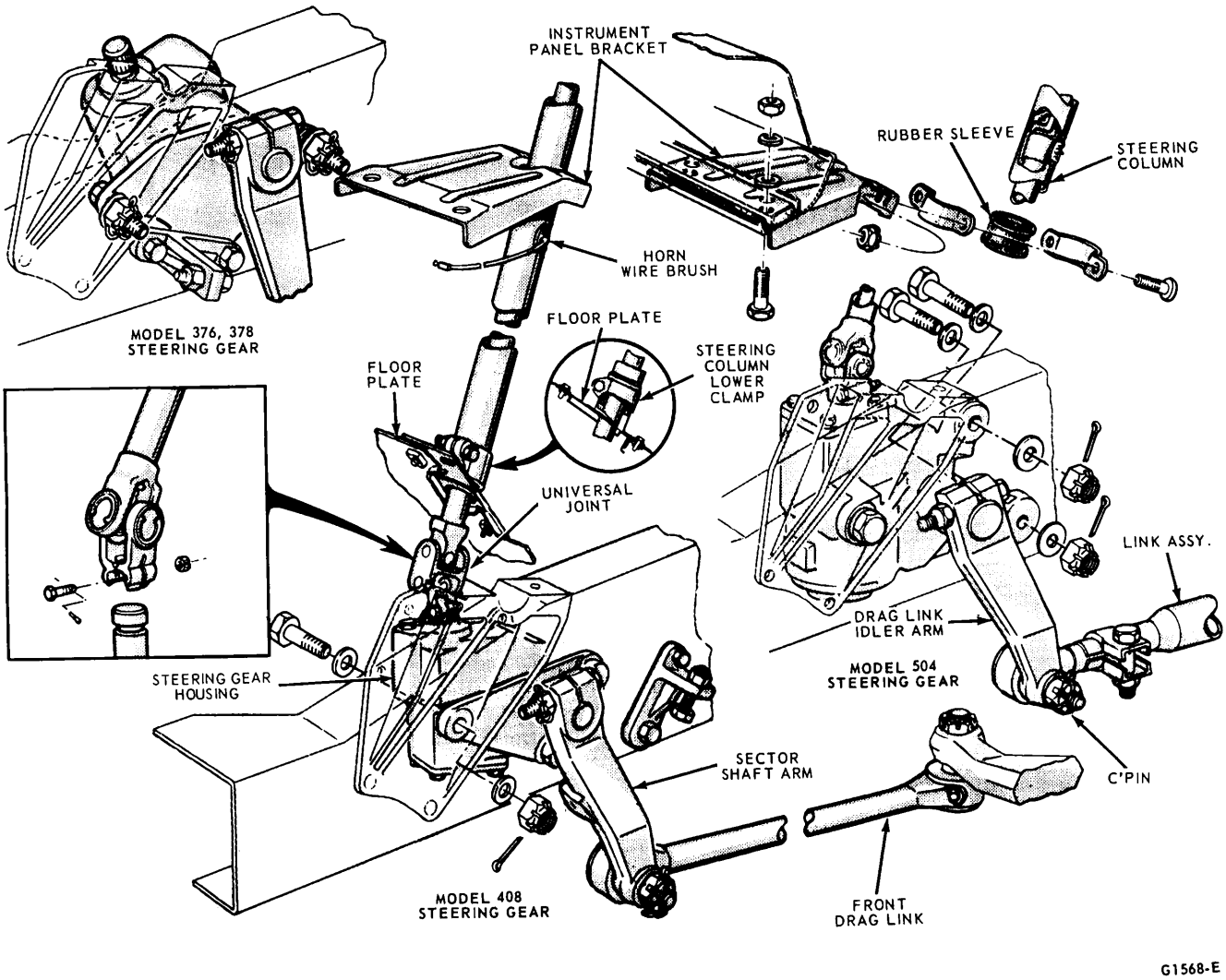

FIG. 2 Steering Column Installation—C-Series

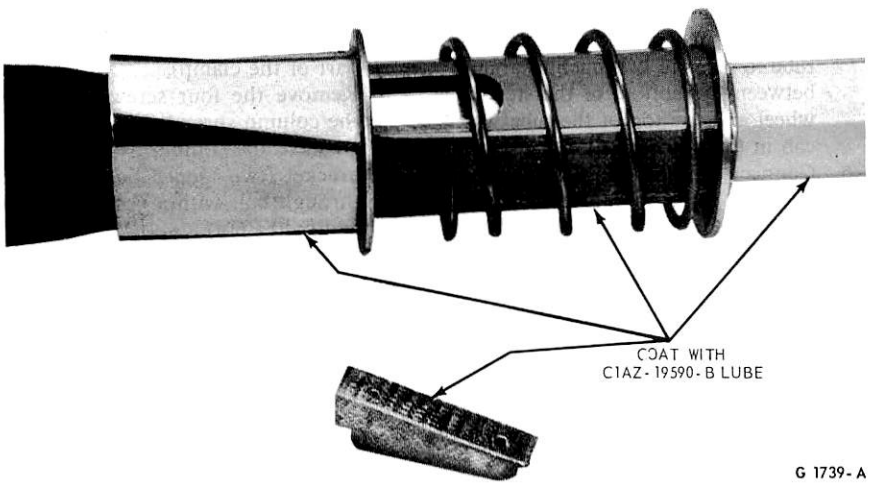

FIG. 3 Steering Column Installation—W-WT-Series

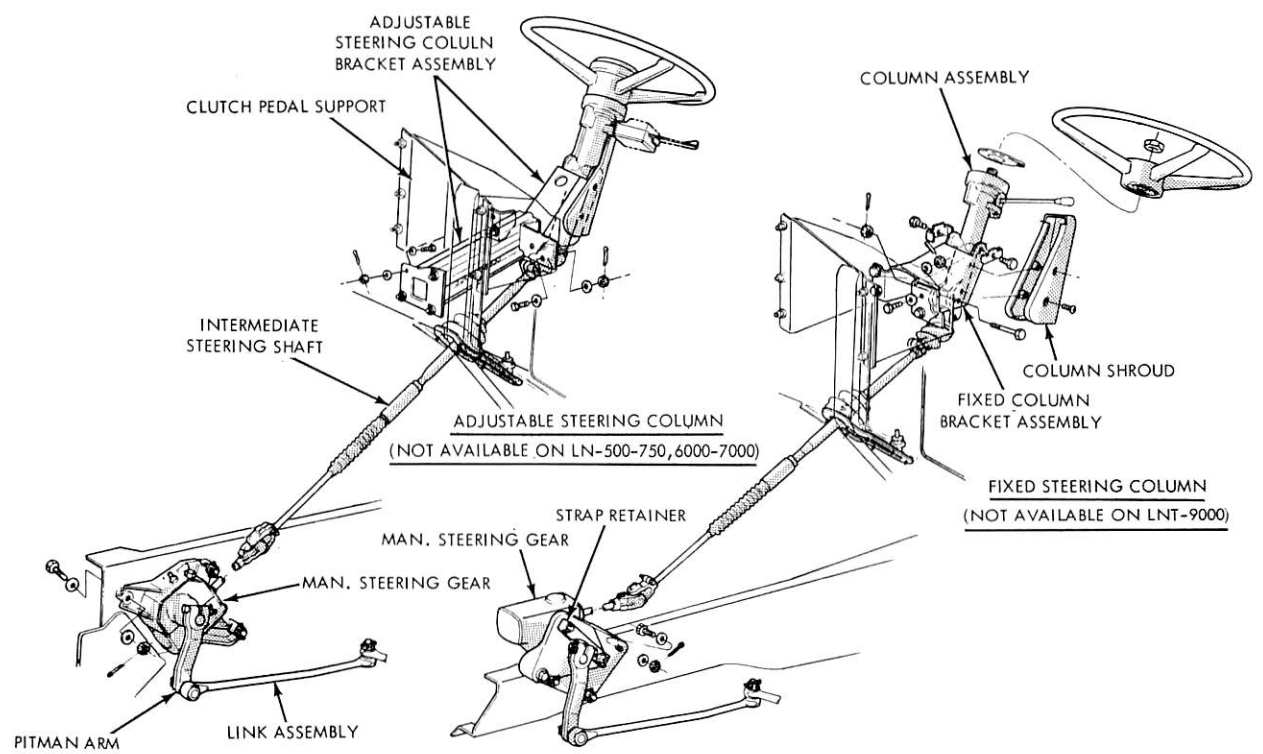

FIG. 4 Steering Column Installation—L-Series

REMOVAL AND INSTALLATION

STEERING COLUMN

F-B-500-750, F-B-6000-7000, F-600 (4 X 4)

Removal

1. Disconnect the horn, turn signal and back-up light wires.
2. Remove the steering wheel.
3. Remove the two screws or bolts retaining the steering column to the instrument panel bracket (Fig. 1).
4. Remove the seven screws retaining the column retainer assembly to the floor pan.
5. Disconnect the steering column from the steering gear.
6. Lift the column out of the vehicle.

Installation

1. Position the column in the vehicle.
2. Align the column to the steering gear. On units with power steering, make certain the flexible coupling is flat when installation is complete. A new shaft-to-gear attaching bolt should be installed to align with the annular groove in the steering gear stub shaft.
3. Install the two screws or bolts retaining the steering column to the instrument panel bracket.
4. Install the seven screws retaining the column retainer to the floor pan.
5. Install the steering wheel using a new nut and torque to specification.
6. Connect the horn, turn signal and back-up light wires.

C-CT-SERIES

Removal

1. Disconnect the horn, turn signal and back-up light wires (and other optional equipment attached to the column).
2. Remove the steering wheel as described in Part 13-34.
3. Remove the two clamp bolts retaining the steering column to the instrument panel bracket (Fig. 2).
4. Remove the cotter pin, nut and bolt retaining the shaft assembly to the steering gear.
5. Remove the four bolts retaining the flange and retainer assembly to the floor pan.
6. Lift the column out of the vehicle.

Installation

1. Position the column in the vehicle.
2. Align the shaft assembly to the steering gear and install the bolt, nut and cotter pin. Make certain the bolt is torqued and aligned with the annular groove in the gear stub shaft.
3. Install the four bolts retaining the flange and retainer assembly to the floor pan.
4. Install the two clamp bolts retaining the steering column to the instrument panel. Make certain the shaft is centered in the tube prior to installing the steering wheel.
5. Install the steering wheel as described in Part 13-34. Adjust the tube to provide 1/16 inch clearance between the bottom of the steering wheel and the top of the tube with cab in the down position.
6. Connect the horn, turn signal and back-up light wires (and other optional equipment attached to the column).

W-WT-9000

Removal

1. Disconnect the horn, turn signal and back-up light wires (and other optional equipment attached to the column).
2. Remove the steering wheel as described in Part 13-34.
3. Remove the four screws retaining the shroud to the clamp assembly.
4. Remove the two bolts retaining the steering column clamp to the instrument panel (Fig. 3).
5. Remove the three bolts retaining the bracket to the floor pan.
6. Remove the bolt, washer and nut retaining the steering shaft assembly to the steering gear.
7. Lift the column out of the vehicle.

Installation

1. Position the column in the vehicle.
2. Attach the steering shaft assembly to the steering gear with the bolt, washer and nut. Make certain the bolt is aligned in the steering gear shaft annular groove.
3. Install the three bolts retaining the bracket to the floor pan.
4. Install the two bolts retaining the steering column clamp to the instrument panel.
5. Install the shroud with the four screws to the clamp assembly.
6. Install the steering wheel as described in Part 13-34.
7. Connect the horn, turn signal and back-up light wires (and other optional equipment attached to the column).

L-SERIES

Removal

1. Disconnect the battery.
2. Remove the steering wheel from the column.
3. Disconnect the directional flasher control at the quick disconnect terminals and remove the air brake control (if so equipped) from the column.
4. The upper steering shaft is attached to the intermediate shaft with a clamp and lock tab assembly, bolt and nut (Fig. 14). Bend the lock tab to remove the nut (the lock tab is part of the clamp).
5. Remove the four screws retaining the column shroud (Fig. 4).
6. Remove the column from the dash bracket (two tapped bolts and one through bolt with a castellated nut and cotter pin).
7. Remove the column from the vehicle.

Installation

1. Position the column in the vehicle and attach the column to the dash bracket with the two tapped bolts and the one through bolt with a castellated nut and cotter pin.
2. Attach the shroud with the four retaining screws.
3. Attach the upper steering shaft to the intermediate shaft using a new clamp assembly. The clamp bolt must be aligned with the annular groove in the intermediate shaft (Fig. 14). Torque the nut to 31-42 ft-lb and bend the lock tab against a nut flat.
4. Connect the directional flasher control and the air brake control (if so equipped).
5. Install the steering wheel using a new nut and set screw as described in Part 13-34.
6. Connect the battery ground cable.

ADJUSTABLE COLUMN BRACKET

L-SERIES

Removal

1. Remove the four screws retaining the shroud to the steering column.
2. Disconnect the directional flasher control at the quick disconnect terminal.
3. Bend the lock tabs up and remove the two upper steering column retaining bolts.
4. Remove the lower column retaining through bolt. Drop the column down.
5. Remove the release cable clamp from the steering column and the air line retaining bracket (if so equipped).
6. With a helper, remove the four

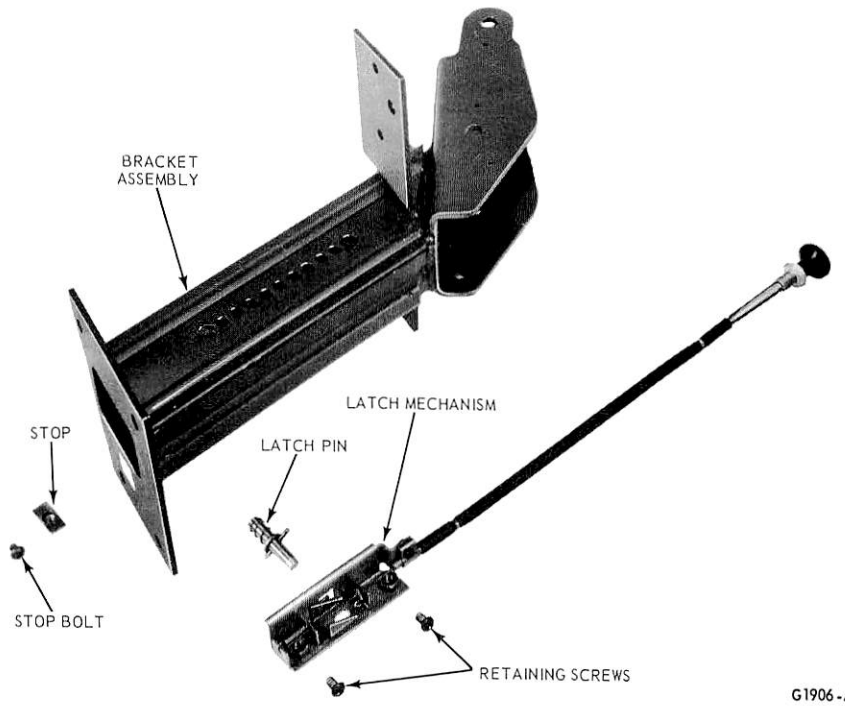

FIG. 5 Adjustable Bracket Disassembled

steering wheel bracket retaining screws and remove the bracket.
7. Remove the two dash panel-to-steering column bolts.
8. Remove the three steering column bracket-to-dash panel retaining screws.
9. Position the adjustable column bracket all the way forward and remove it from the vehicle.

Installation

1. Position the adjustable column bracket in the vehicle.
2. Install the three steering column bracket-to-dash panel retaining screws.
3. Install the two dash panel-to-steering column retaining bolts.
4. With a helper, install the four steering wheel bracket retaining screws.
5. Install the release cable clamp to the steering column.
6. Install the air line retaining bracket (if so equipped).
7. Position the steering column up and install the lower column retaining through bolt.
8. Install the two upper retaining bolts and bend the lock tabs down onto the bolts.
9. Connect the directional flasher control at the quick disconnect terminal.
10. Install the four screws retaining the shroud to the steering column.
11. Check the column positioning operation.

ADJUSTABLE COLUMN LATCH MECHANISM

L-SERIES

Removal

1. Remove the Allen stop bolt and stop from the lower end of the adjusting bracket.
2. Release the inner tube of the bracket and move the inner tube forward until the lower latch plate retaining screw is visible through the last (larger) hole in the bracket outer tube. Remove the retaining screw.
3. Now move the inner tube in the opposite direction to expose the other retaining screw in the rearward larger hole. Remove that retaining screw.
4. Move the inner tube forward again until the latch pin is centered in the last (larger) hole in the bracket outer tube.
5. With a screwdriver, turn the latch pin 90 degrees clockwise to release it from the latch mechanism. Work the latch pin free of the collar of the boss (located in the inner tube) and remove the pin and mechanism through the lower end of the bracket (Fig. 5).

Installation

1. **Do not disturb the cable retaining clamp screw (preset in manufacture).**
2. Lay the latch pin in the latch mechanism as shown in Fig. 6.
3. Carefully insert the pin and latch mechanism into the lower end of the bracket (Fig. 7), working the slotted end of the pin through the elongated hole in the inner tube and the larger hole in the outer tube. The pin, when properly located, will slip up and over the boss collar and seat.
4. With the screwdriver, depress the latch pin and move the inner tube rearward until the lower retaining screw can be installed and tightened through the larger, lower hole.
5. Again move the inner tube rearward until the other retaining screw can be installed and tightened through the larger, rearward hole.
6. With a screwdriver, turn the latch pin 90 degrees counterclockwise to engage it to the latch mechanism.
7. Install the Allen stop bolt and stop in the lower end of the adjusting bracket.

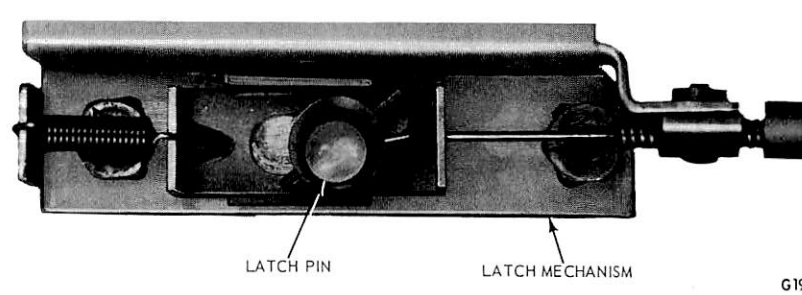

FIG. 6 Latch Pin Placement

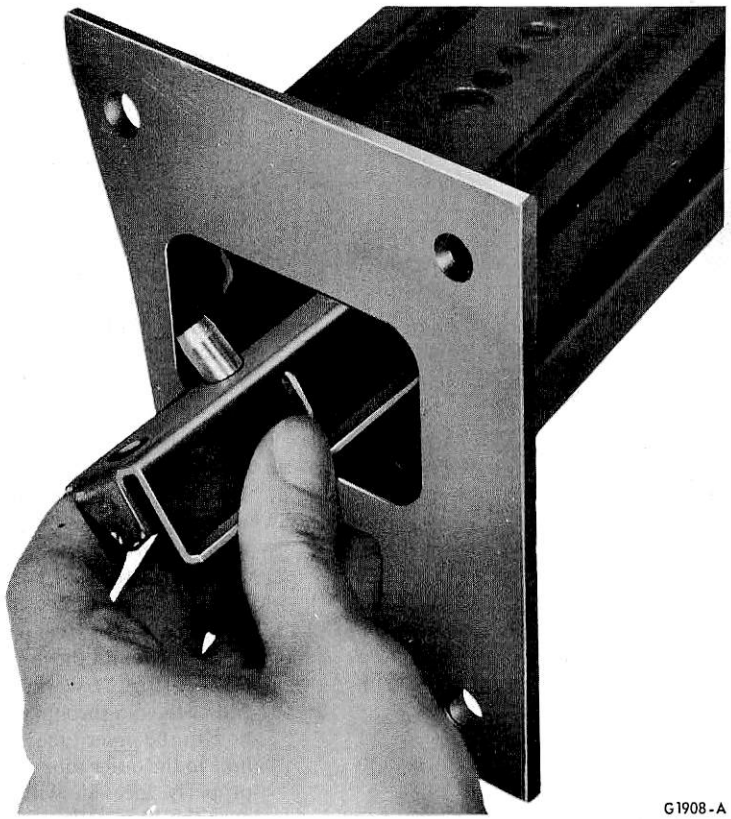

FIG. 7 Installing Pin and Latch Mechanism

DISASSEMBLY AND ASSEMBLY

STEERING COLUMN

L-SERIES

Disassembly

1. Remove the cotter pin from the adjusting nut at the lower end of the column.
2. Loosen the adjusting nut.
3. Remove the snap ring at the upper end of the column (Fig. 8).
4. Remove the inner shaft from the column tube by carefully striking the top of the shaft with a plastic mallet.

Assembly

1. Insert the inner shaft into the column tube taking care not to damage the upper bearing.
2. Install the snap ring at the upper end of the column.
3. Apply 13-18 ft-lb torque to the adjusting nut while rotating the shaft to seat the bearings.
4. Back off the nut 1/2 turn and retorque to 3-7 ft-lb. The steering shaft rotating torque should be 10-15 in-lb. Install the adjusting nut cotter pin.

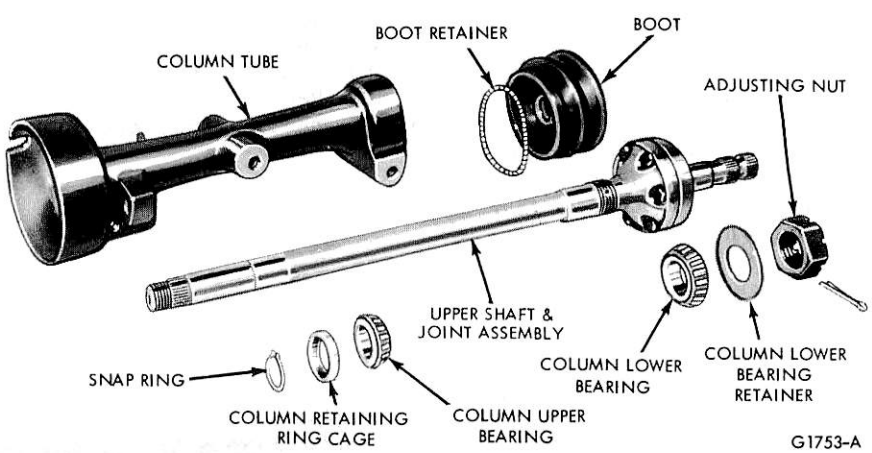

FIG. 8 Steering Column—L-Series—Disassembled

INTERMEDIATE STEERING SHAFT

L-SERIES

Servicing of this component (performed with the assembly removed from the vehicle) normally will only be required if the coupling assembly has excessive lash or fails to telescope in and out under normal operation.

This shaft is a coupling assembly with a hex shaft telescoping into a reduced hexagonal cross section tube. The clearance between the shaft and tube is automatically compensated by a wear pad, an adjusting can, a spring, a

preset retainer and the spring pre-load eliminating lash (Fig. 9).

Disassembly

1. Remove the stop bolt from the end of the hex shaft.
2. Pull the hex shaft completely out of the tube and boot (Fig. 10).
3. Remove the boot from the tube assembly.
4. Remove the rubber insert located over the enlarged round tube section (Fig. 10).
5. Pull back on the adjusting can, compressing the spring. Remove the wear pad from the adjusting can slot (Fig. 11).
6. Thoroughly clean the shaft, tube assembly, boot and wear pad with a non-abrasive solution.
7. Inspect all parts for excessive wear and replace where applicable.

Assembly

1. Repack the hexagonal shaft and the inside surface of the reduced hexagonal end of the tube with C1AZ-19590-B lube.
2. Coat the spring area and the surface around the adjusting can with C1AZ-19590-B lube (Fig. 12).
3. Insert the shaft in the tube. The shaft should stroke freely at a maximum pull load of 3 1/2 lbs. If the load exceeds this specification, replace the required parts.
4. Lubricate the wear pad and insert it in the slot by compressing the adjusting spring.
5. Stroke the shaft in the tube. It should stroke freely at a maximum pull load of 12 lbs. If the load exceeds this specification, replace the required parts.
6. Insert the rubber insert to the position shown in Fig. 13.
7. Slip the boot with the convoluted end towards the male serrations over the shaft. Then slip the smooth end of the boot over the spring and adjusting can (Fig. 14).
8. Assemble the stop bolt in the end of the hex shaft. Torque to 22-20 ft-lb.

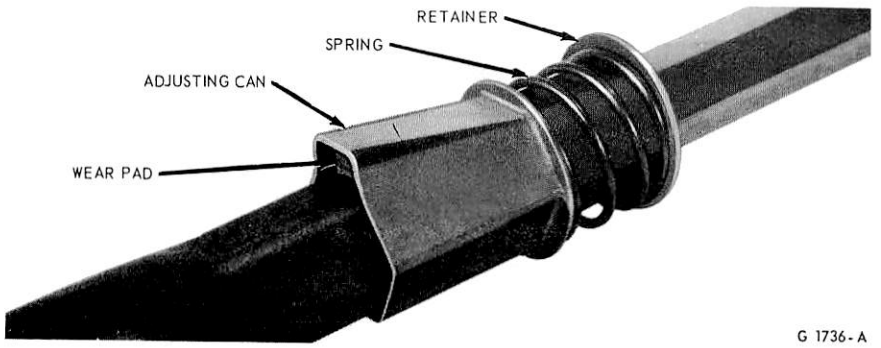

FIG. 9 Coupling Assembly Components

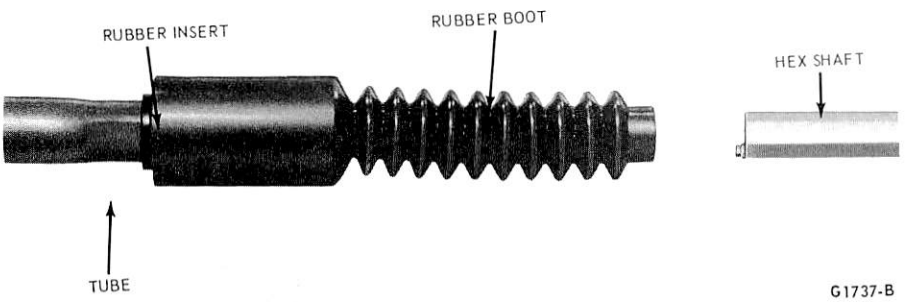

FIG. 10 Separating Hex Shaft from Tube

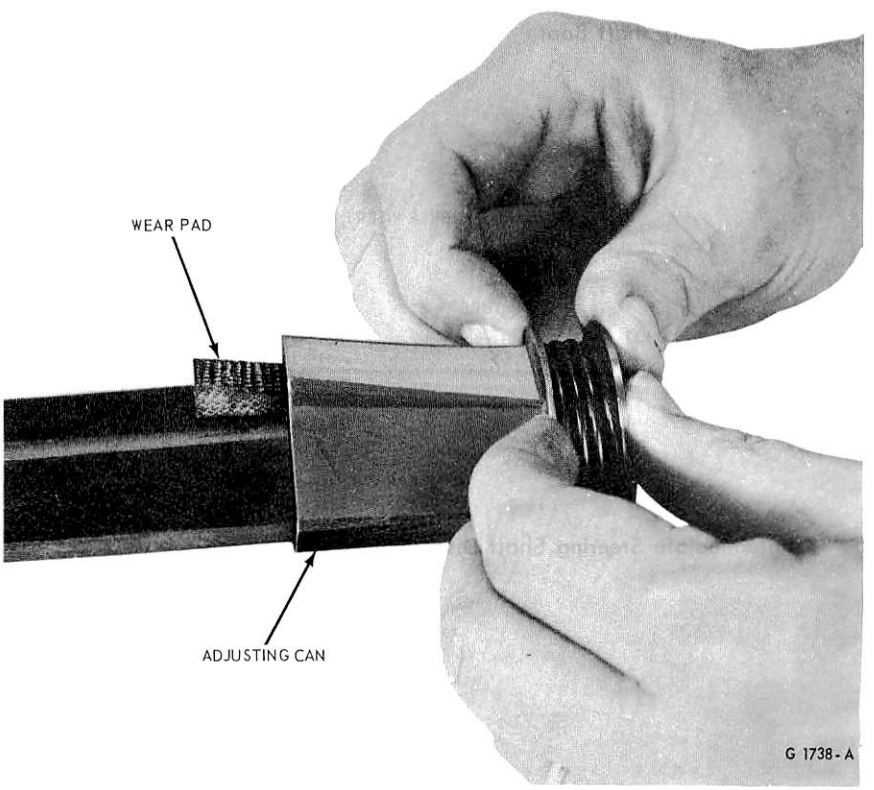

FIG. 11 Removing Wear Pad

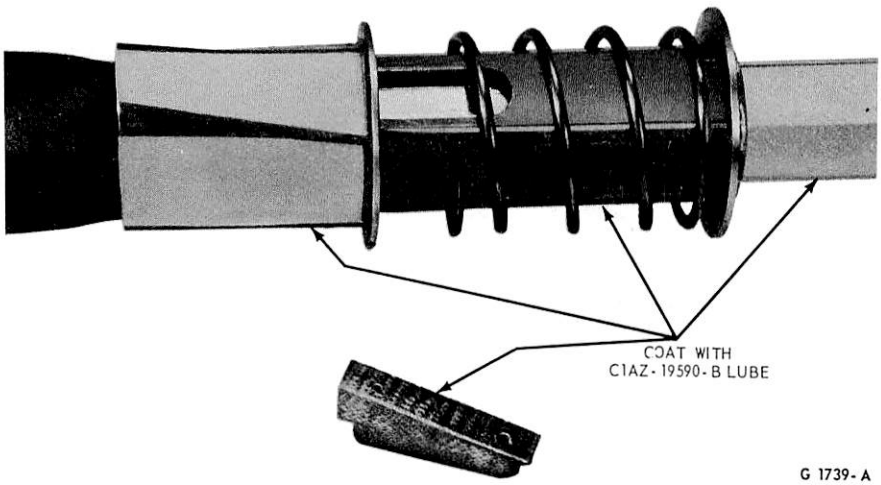

FIG. 12 Lubricating Areas at Assembly

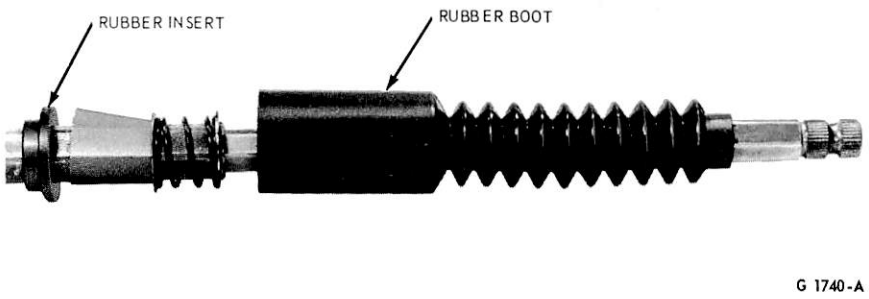

FIG. 13 Assembling Shaft Boot

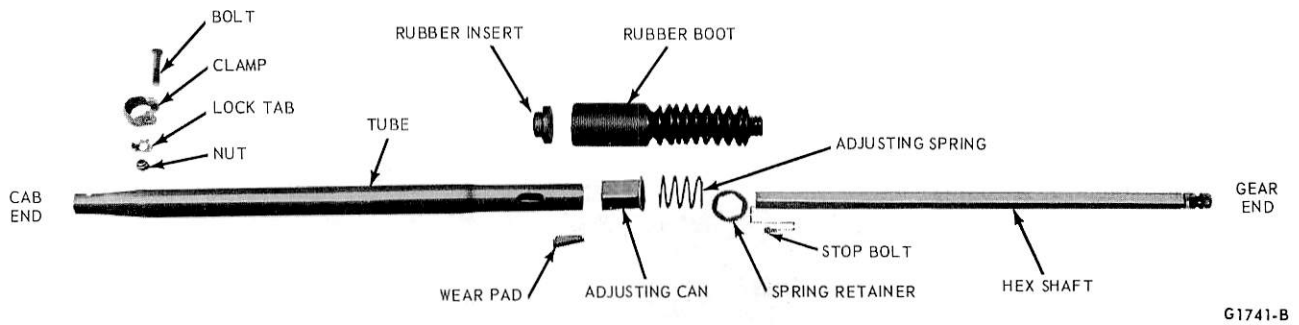

FIG. 14 Intermediate Steering Shaft Disassembled

PART 13-22 Steering Linkage—Power Gear/ Power Cylinder

Applies To F-600 (4x4), F-750-7000, LN-750-7000 (with 9000 lb. axles), LNT-LT-LTS-800-9000 (with 16, 18, 20000 lb. axles), W-WT-9000 Only

COMPONENT INDEX	Page	COMPONENT INDEX	Page
POWER CYLINDER		POWER CYLINDER SEAL	
Disassembly and Assembly	22-04	Removal and Installation	22-03
Removal and Installation	22-01		
POWER CYLINDER HOSE SEAT		STEERING LINKAGE	
Removal and Installation	22-03	Description	22-01

DESCRIPTION

STEERING LINKAGE

Various types of power steering systems are optional equipment on some medium, heavy and extra heavy trucks. The F-600 (4 x 4), F-750-7000, LN-750-7000 vehicles with 9000 lb front axles, all LNT-LT-LTS-800-900, 8000-9000 units with 16000, 18000 and 20000 lb. front axles and all W-WT-9000 trucks use a power steering gear coupled with a power cylinder (Figs. 1 through 5).

REMOVAL AND INSTALLATION

When performing any service operations on power steering systems which necessitate hose disconnecting, make certain the hoses are tagged prior to removal. It is important that the hoses are reconnected to their correct ports to preclude damage to the system.

See Group 50 for Hoisting instructions. For Removal and Installation of the steering gear, refer to Groups 13-43 and 13-44, under Removal and Installation. Steering wheel replacement procedure is described in Group 13-34, under Removal and Installation.

POWER CYLINDER

Removal

1. Make certain the pressure and return hoses are properly identified (front and rear) to insure proper port connections during installation.
2. Disconnect the hoses from the cylinder and fasten them in a raised position.
3. On F-LN-Series, back out the cylinder plug on the piston rod end of the cylinder until it is possible for the ball stud to clear the cylinder. The ball stud should remain on the tie rod (Fig. 1).

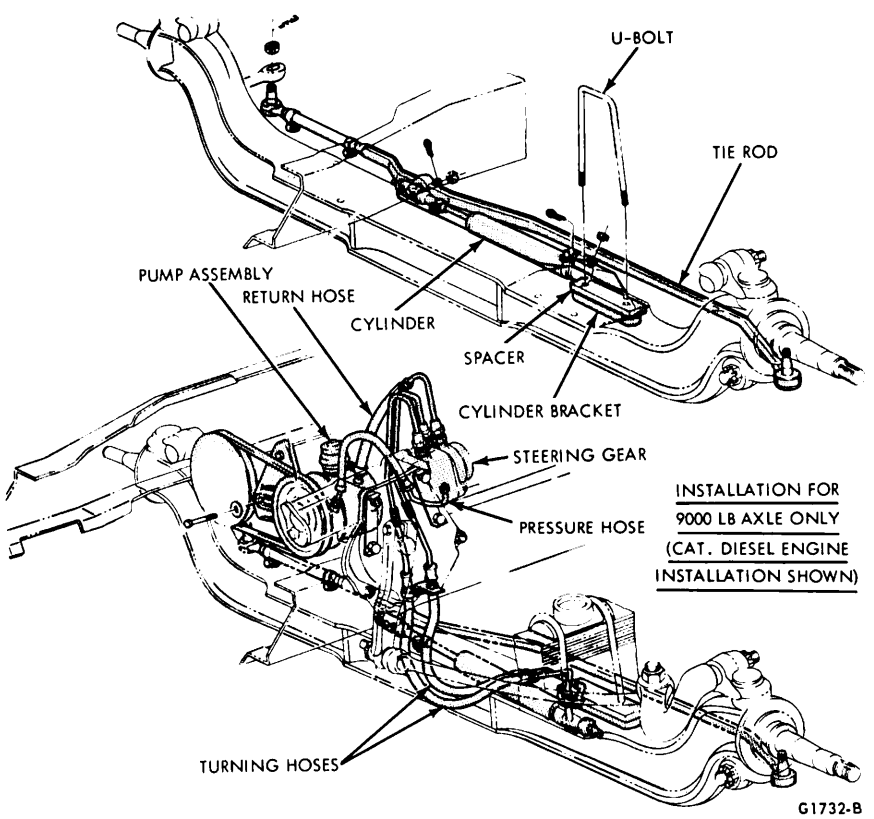

FIG. 1 Power Steering Installation—LN-750 W/9000 lb. Axle (F-750 Similar)

On LT-LNT-LTS-Series, back out the cylinder plug at the forward end of the cylinder until it is possible for the ball stud to clear the cylinder. The ball stud should remain in the side rail bracket (Fig. 2).

On F-600 (4 x 4) vehicles, back out the cylinder plug on the anchored end of the cylinder until it is possible for the ball stud to clear the cylinder. The ball stud should remain with its anchoring bracket (Fig. 4).

On W-Series, the ball stud must be removed from the pitman arm exercising care not to damage the attaching surfaces of the stud (Fig. 5).

4. On all units, the opposite end of the cylinder must be disconnected by dropping the ball stud from the bracket (steering arm on F-600 4 x 4-LT-LNT-LTS-Series). Again, care should be taken to prevent harming the seal or threads of the stud.

Installation

When repairing or replacing a cylinder, remember that the ball stud attachment is adjustable on all power cylinders and, using this means, be certain that the cylinder does not bottom in a full left or full right turn.

1. On all units, connect the anchored end of the cylinder to its mounting bracket (steering arm on F-600 4 x 4-LT-LNT-LTS-Series) with the ball stud. Install the nut and torque to 50-70 ft-lb (110-150 ft-lb on LT-LNT-LTS-W-WT-Series). If necessary, advance to the next castellation and install the cotter pin.
2. On W-Series, connect the piston rod ball stud to the pitman arm and install the nut. Torque to 110-150 ft-lb and, if necessary, advance the nut to the next castellation to insert the cotter pin (Fig. 5).

On F-600 (4 x 4) vehicles, insert the ball stud on the anchoring bracket into the rearward end of the cylinder. Install the cylinder plug and torque to specification (15 ft-lb). Back off to the nearest castellation and install the cotter pin (Fig. 4).

On LT-LNT-LTS-Series, insert the

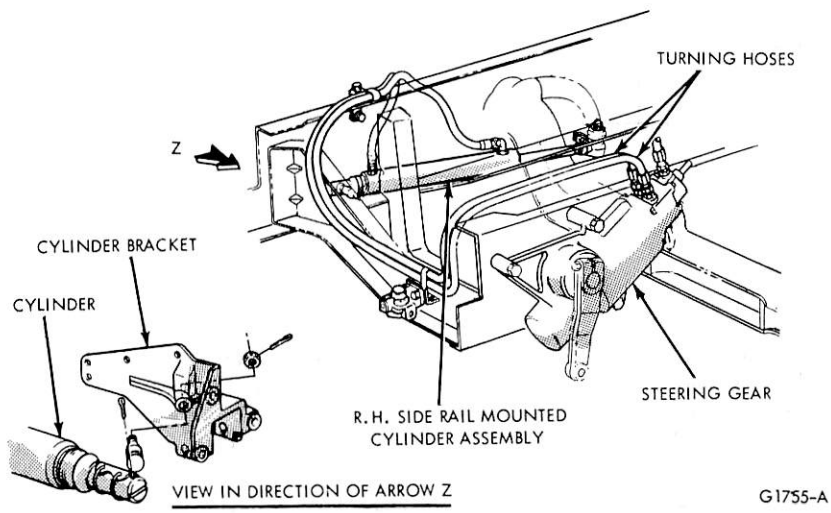

FIG. 2 Power Steering Installation—LT-LNT-LTS—Series W/16000, 18000, 20000 lb. Axles

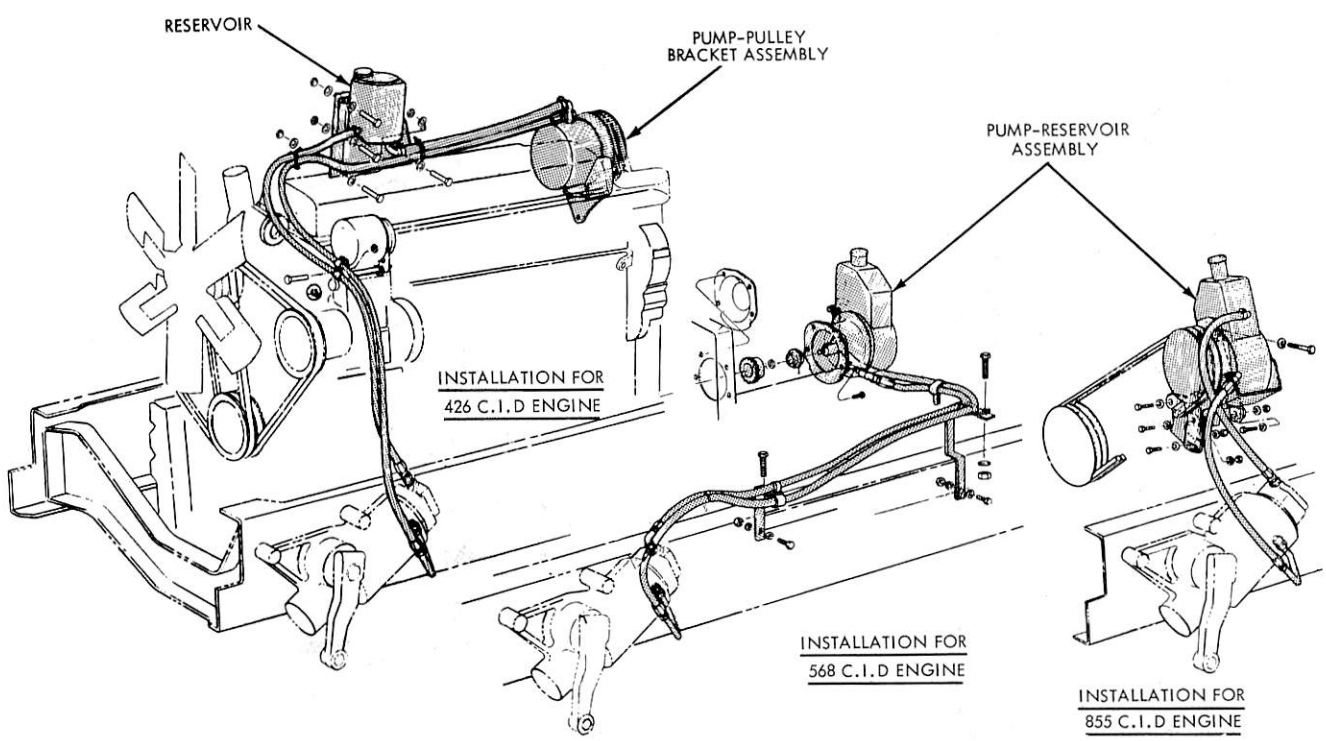

FIG. 3 Power Steering Pump Installation— L-LT-LTS-LN-LNT-Series with Diesel Engines

ball stud on the side rail bracket into the forward end of the cylinder. Install the cylinder plug and torque to specification (40-50 ft-lb). Back off a 1/8 minimum to 5/8 maximum turn for cotter pin installation (Fig. 2).

On F-LN-Series, insert the ball stud on the tie rod into the piston rod end of the cylinder. Install the cylinder plug and torque to specification (15 ft-lb). Back off to the nearest castellation for cotter pin installation (Fig. 1).

3. Connect the two hoses to their **proper** ports. Fill the fluid reservoir to specification with automatic transmission fluid.
4. Start the engine and run it at idle speed for about two minutes to warm the fluid in the power steering system.
5. Turn the steering wheel all the way to the left and right several times, and check the system for fluid leak. Check the reservoir for proper fluid level. Fill if required.
6. Increase the engine speed to about 1000 rpm, and turn the steering wheel all the way to the left and right several times. Do not hold the wheels against the stops.
7. Stop the engine, and check the power cylinder and hose connections for fluid leaks. Correct the cause of any leaks.

POWER CYLINDER SEAL

W-WT-SERIES

Removal and Installation

The W-WT-Series power cylinder cannot be disassembled. Only the oil seal and snap ring can be replaced.

1. Carefully clamp the power cylinder in a vise in a manner to prevent distortion, and remove the snap ring from the end of the cylinder.
2. Remove as much fluid from the cylinder as possible by stroking the piston rod in and out. Apply air pressure to the retracting port on the cylinder to blow out the seal.
3. After lubricating a new seal with automatic transmission fluid, position it on the piston. Install the seal with a suitable deep socket.
4. Install the retaining snap ring with the sharp edge facing out.

POWER CYLINDER HOSE SEAT

W-WT-SERIES

Removal and Installation

If any of the cylinder hose seats need replacement, use the following procedures:

1. Tap the existing hole in the hose seat. Use a 3/8 inch starting tap for the large hose seat and a 1/4 inch starting tap for the small seats. **Be sure to remove all metal chips from the hose seat port after tapping.**
2. Place a nut and large flat washer on a bolt of the same size as the tapped hole. The washer must be large enough to cover the hose seat port.
3. Thread the bolt into the tapped hole,

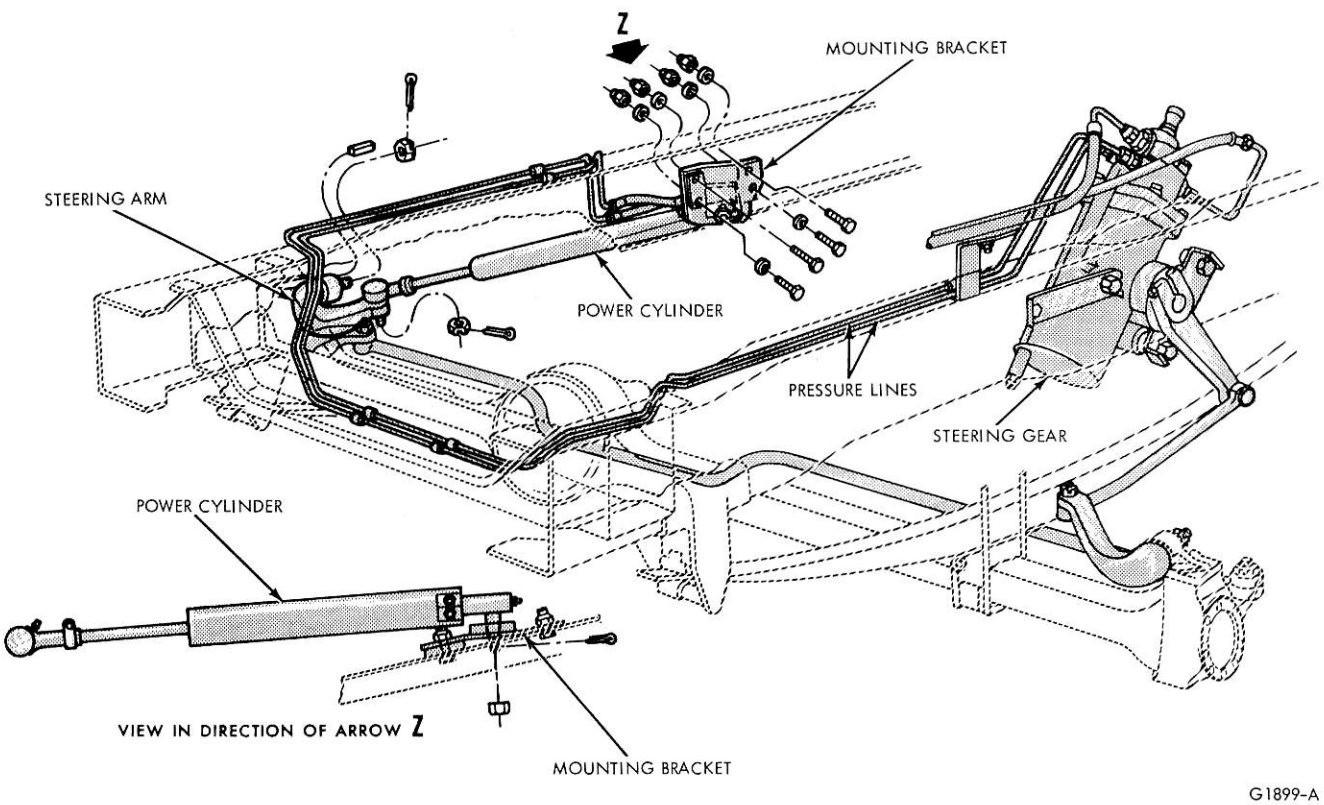

FIG. 4 Power Steering Installation—F-600 (4 x 4)

and turn the nut to remove the hose seat.

4. Place a new hose seat in the port, and thread a bolt of the same size as the port into the port. Tighten the bolt enough to bottom the seat in the port.

DISASSEMBLY AND ASSEMBLY

The procedures given in Part 13-34, under Disassembly and Assembly also apply to vehicles equipped with a power steering.

POWER CYLINDER

Disassembly

Handle all parts with care. Clean all parts by washing in a suitable solvent and blow dry with compressed air.

1. Drain the oil from the power cylinder by moving the piston rod (Figs. 6 and 7) in and out from one extreme end of its travel to the other.
2. Remove the retaining bolts on the end plate and remove the end plate.
3. Remove the cylinder retaining ring by pushing the cylinder into the cylinder barrel approximately 1/4 inch and compressing the retaining ring. This is accomplished by inserting a punch through the knock out hole in the cylinder shell barrel.
4. Pull out the piston rod (Figs. 6 and 7) to expose the integral parts of the cylinder shell.
5. Remove the piston rod nut from the piston end of the rod. **The rod should be held at the two wrench flats near the outer thread end to prevent damage to the rod OD finish.**
6. Slide off the piston.
7. Remove the cylinder gland from the piston rod by sliding it off the piston end of the piston rod.
8. With the cylinder gland removed from the rod, remove the sealing parts in the following order: (as in Fig. 6) the outer retaining ring, the outer retaining washer, the oil seal, the inner retainer washer, the inner retaining ring, the leather back-up washer and the inner O-ring; (as in Fig. 7) the scraper, the inner retaining ring, and the seal.
9. Remove the O-ring and back-up ring from the OD of the cylinder gland.

Assembly

1. Lubricate all seals and O-rings with light oil before assembling.
2. To the inside of the cylinder gland (as in Fig. 7), assemble the seal, the inner retaining ring and the scraper with the lip toward the outside of the cylinder.
3. On cylinders shown in Fig. 6, assemble the O-ring, the leather back-up washer, the inner retaining ring, the inner retaining washer, the oil seal (with the lip toward the outside of the cylinder), the outer

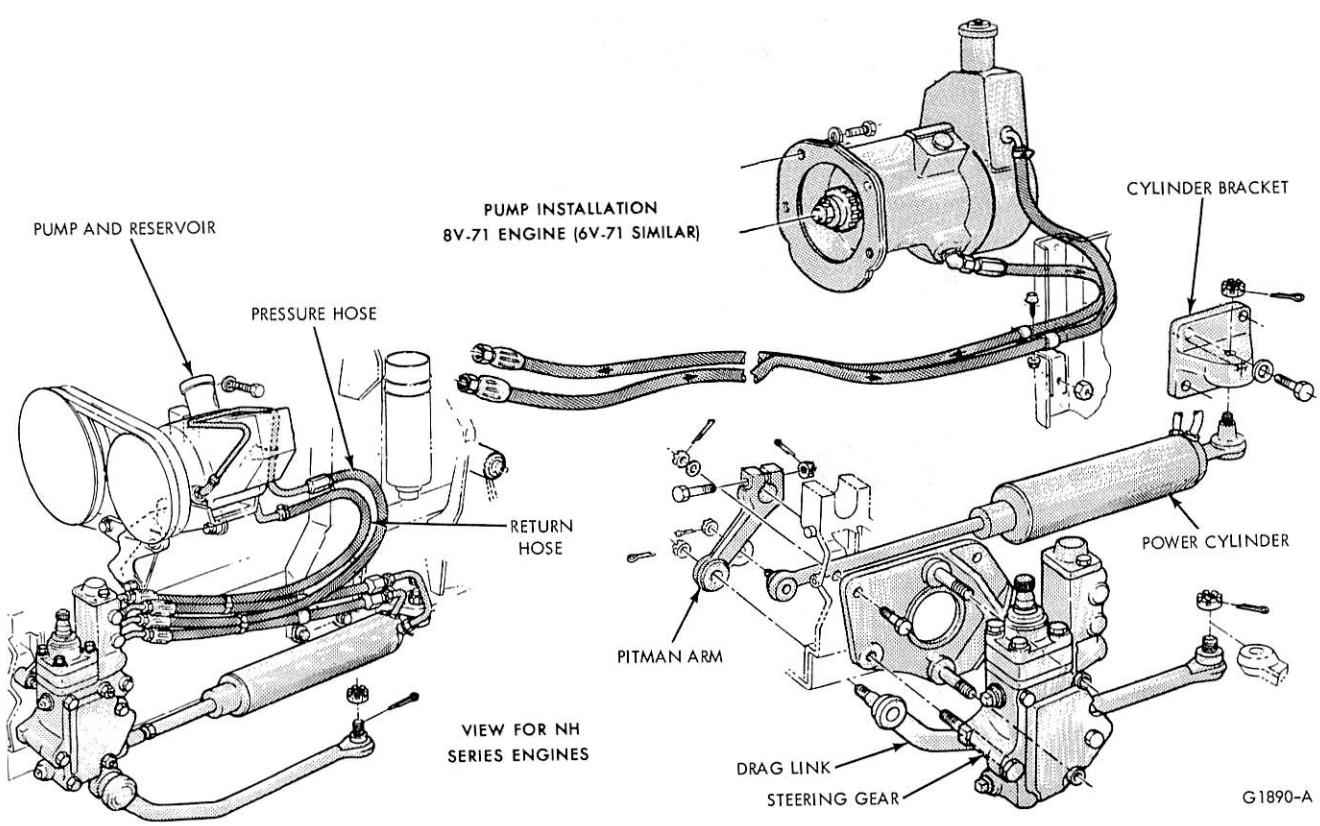

FIG. 5 Power Steering Installation—W-WT-9000 Typical

retaining washer and the outer retaining snap ring.

4. Install the back-up ring and the O-ring to the OD of the cylinder gland. To prevent damage to the rod oil seal, carefully slide the cylinder gland over the piston end of the piston rod toward the threaded end.
5. Secure the piston to the end of the piston rod with the piston rod nut. Torque the nut to specification (30-35 ft-lb, F-600 4 x 4 and F-LN-750-7000 with 9000 lb. axle; 60-65 ft-lb, LTS-Series with 16, 18, 20000 lb. axles; 100-125 ft-lb, LT-LNT-Series with 16000 lb. axle).
6. Push the piston rod assembly into the cylinder shell approximately half way. Slide the cylinder gland into the cylinder shell taking care not to damage the O-ring as it moves past the retaining ring groove in the end of the cylinder shell.
7. Lock the cylinder in place by installing the cylinder retaining ring in the cylinder shell groove.
8. Check for binding by moving the piston rod through its full travel several times.
9. Assemble the end plate with its retaining bolts.

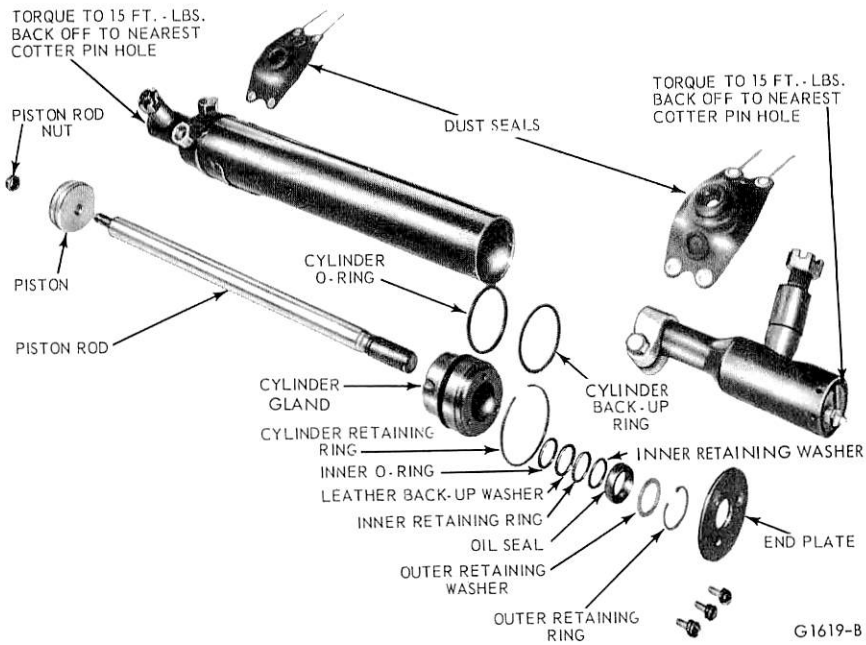

FIG. 6 Power Cylinder Disassembled—F-LN-750-7000 W/9000 Lb. Axle (F-600 4 x 4 and LTS W/16, 18 and 20000 Lb. Axles Similar)

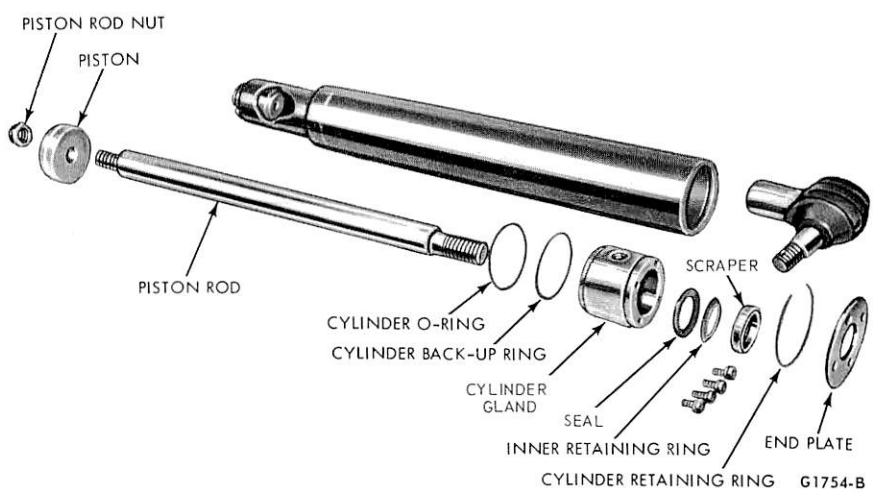

FIG. 7 Power Cylinder Disassembled LT-LNT-Series W/16000 Lb. Axle

PART 13-23 Steering Linkage—Power Cylinder/Control Valve

Applies To C-CT Series, Econoline Only

COMPONENT INDEX	Page	COMPONENT INDEX	Page
CONTROL VALVE		POWER CYLINDER (CONT'D)	
Disassembly and Assembly	23-05	Disassembly and Assembly	23-05
Removal and Installation	23-03	POWER CYLINDER SEAL	
PITMAN ARM STOPS		Removal and Installation	23-04
Adjustment	23-01	STEERING LINKAGE	
POWER CYLINDER		Description	23-01
Removal and Installation	23-01	VALVE OR CYLINDER HOSE SEAT	
		Removal and Installation	23-04

DESCRIPTION

STEERING LINKAGE

The C-CT-Series and Econoline are equipped with a separate power cylinder and a separate control valve with no power gear included in the linkage system (Figs. 1, 2 and 3).

ADJUSTMENTS

The procedures given in Parts 13-33 and 34 under Adjustments also apply to vehicles equipped with power steering.

PITMAN ARM STOPS

ECONOLINE

1. Loosen the lock nut on both pitman arm stops (Fig. 3) and turn the adjusting screws inward several turns.
2. Turn the steering wheel to the right, until the right spindle steering arm contacts the stop.
3. Adjust the forward pitman arm stop outward until it contacts the pitman arm. Tighten the lock nut.
4. Turn the steering wheel to the left, until the left spindle steering arm contacts the stop.
5. Adjust the rearward pitman arm stop outward until it contacts the pitman arm. Tighten the lock nut.

REMOVAL AND INSTALLATION

When performing any service operations on power steering systems which necessitate hose disconnecting, make certain the hoses are tagged prior to removal. It is important that the hoses are reconnected to their correct ports to preclude damage to the system.

See Group 50 for Hoisting instructions. For Removal and Installation of the steering gear and steering wheel, refer to Parts 13-33 and 13-34 under Removal and Installation.

POWER CYLINDER

C-SERIES

Removal

1. Make certain the pressure and return hoses are properly identified (front and rear) to insure proper port connections during installation.
2. Disconnect the hoses from the cylinder and fasten them in a raised position.
3. On C-900 (with a 9.76 frame), CT-800 and CT-900 (with 9000, 12000 or 15000 lb. front axles) models, remove the nut and mounting bolt retaining the piston rod eye to the

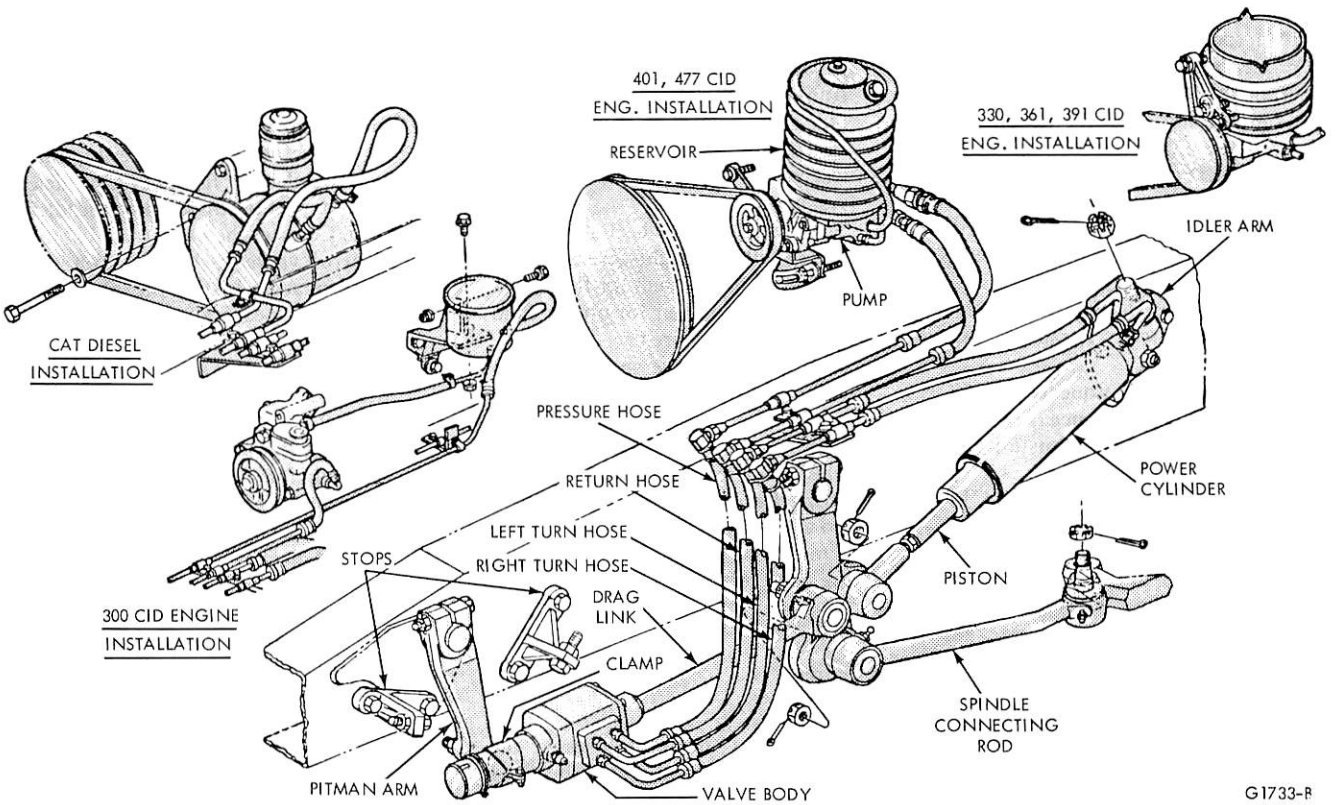

FIG. 1 Power Steering Installation C-500-800,900 (9.50 Frame),C-6000-8000

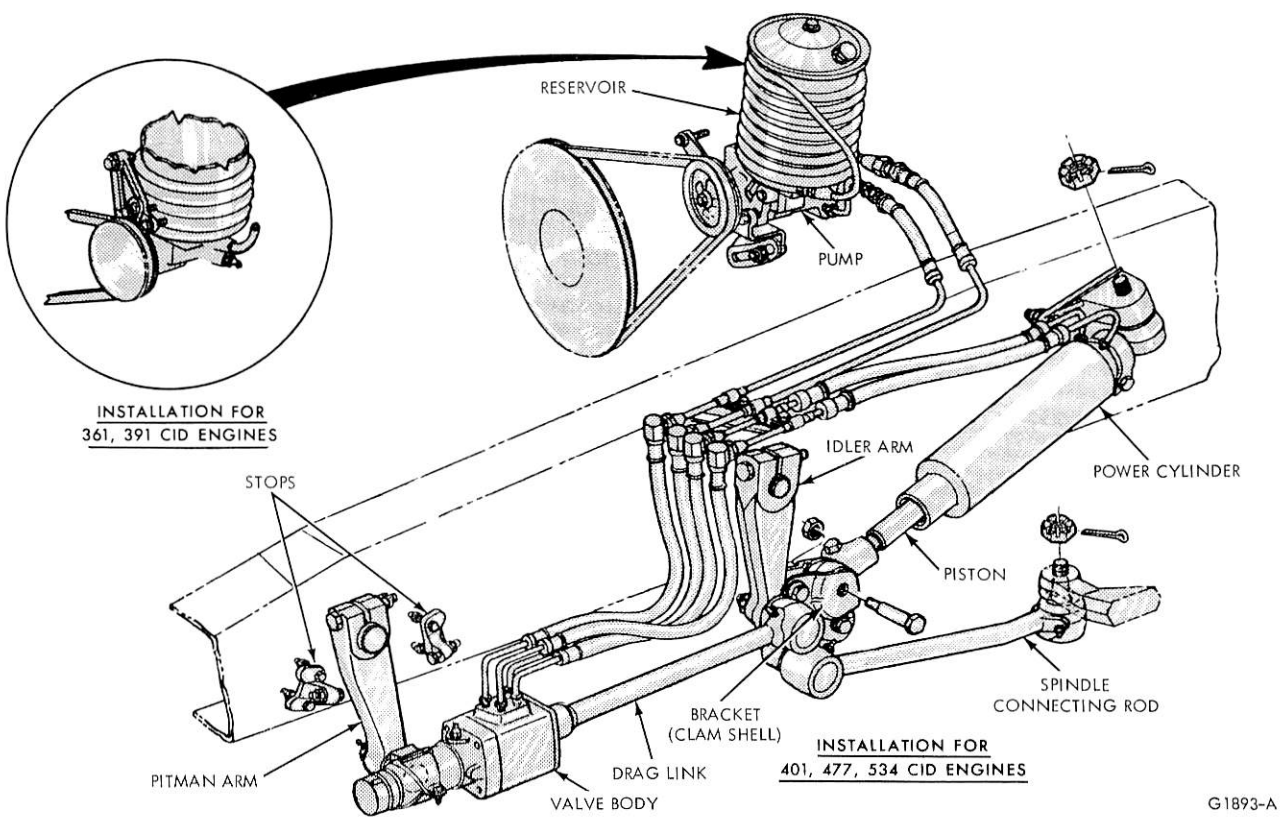

FIG. 2 Power Steering Installation C-900 (9.76 Frame), CT-800-900 (9000, 12000,15000 lb. Axles)

bracket (clam shell). Force the piston rod into the cylinder until the eye clears the bracket (Fig. 2).

On all other C models, remove the cotter pin and nut from the piston rod ball stud. Disconnect the ball stud from the idler arm (Fig. 1).

4. Remove the cotter pin and nut from the ball stud at the rear end of the cylinder, and remove the cylinder.

Installation

1. Position the anchored end of the power cylinder in its mounting bracket.
2. Install the nut and torque to 110-150 ft-lb. If necessary, advance the nut to its next castellation to install the cotter pin.
3. On C-900 (with a 9.76 frame), CT-800 and CT-900 (with 9000, 12000 or 15000 lb. front axles) models, pull the piston rod out of the cylinder until the piston rod eye is positioned between the holes in the bracket. Insert the mounting bolt through the bracket and eye. Install the nut and torque to specification (Fig. 2).

On all other C models, pull the piston rod out of the cylinder until the piston rod ball stud can be inserted into the idler arm. Install the nut and torque to 110-150 ft-lb. If necessary, advance to the next castellation to install the cotter pin (Fig. 1).

4. Connect the two hoses to their **proper ports. Fill the fluid reservoir to specification with automatic transmission fluid.**
5. Start the engine and run it at idle speed for about two minutes to warm the fluid in the power steering system.
6. Turn the steering wheel all the way to the left and right several times, and check the system for fluid leak. Check the reservoir for proper fluid level. Fill if required.
7. Increase the engine speed to about 1000 rpm, and turn the steering wheel all the way to the left and right several times. Do not hold the wheels against the stops.
8. Stop the engine, and check the power cylinder and hose connections for fluid leaks. Correct the cause of any leaks.

CONTROL VALVE

C-SERIES

Removal

1. Disconnect the four hoses at the control valve, and drain the fluid from the hoses.
2. Remove the plug from the forward end of the valve and disconnect the control valve from the stud on the pitman arm.
3. Disconnect the drag link from the idler arm and remove the valve and drag link (Figs. 1 and 2).

Installation

1. If necessary, install a new dust cover in the sector shaft arm. Position the valve and drag link in the vehicle and connect the drag link to the idler arm. Connect the forward end of the control valve to the stud on the pitman arm. Install the plug and torque to specification.
2. Connect the hoses at the valve.
3. Lubricate the two studs at the grease fittings.
4. Fill the fluid reservoir to the specified level with automatic transmission fluid.
5. Operate the engine at idle speed for about two minutes to warm the fluid. Check the fluid level, and check all hose connections for leaks.
6. Increase the engine speed to about 1000 rpm, and then turn the steering wheel to the left and right several times. Do not hold the wheels against the stops.
7. Stop the engine, place the front wheels in the straight ahead position and check the control valve and the hose connections for fluid leakage.
8. After correcting any fluid leaks, check the fluid level and refill the reservoir if necessary.

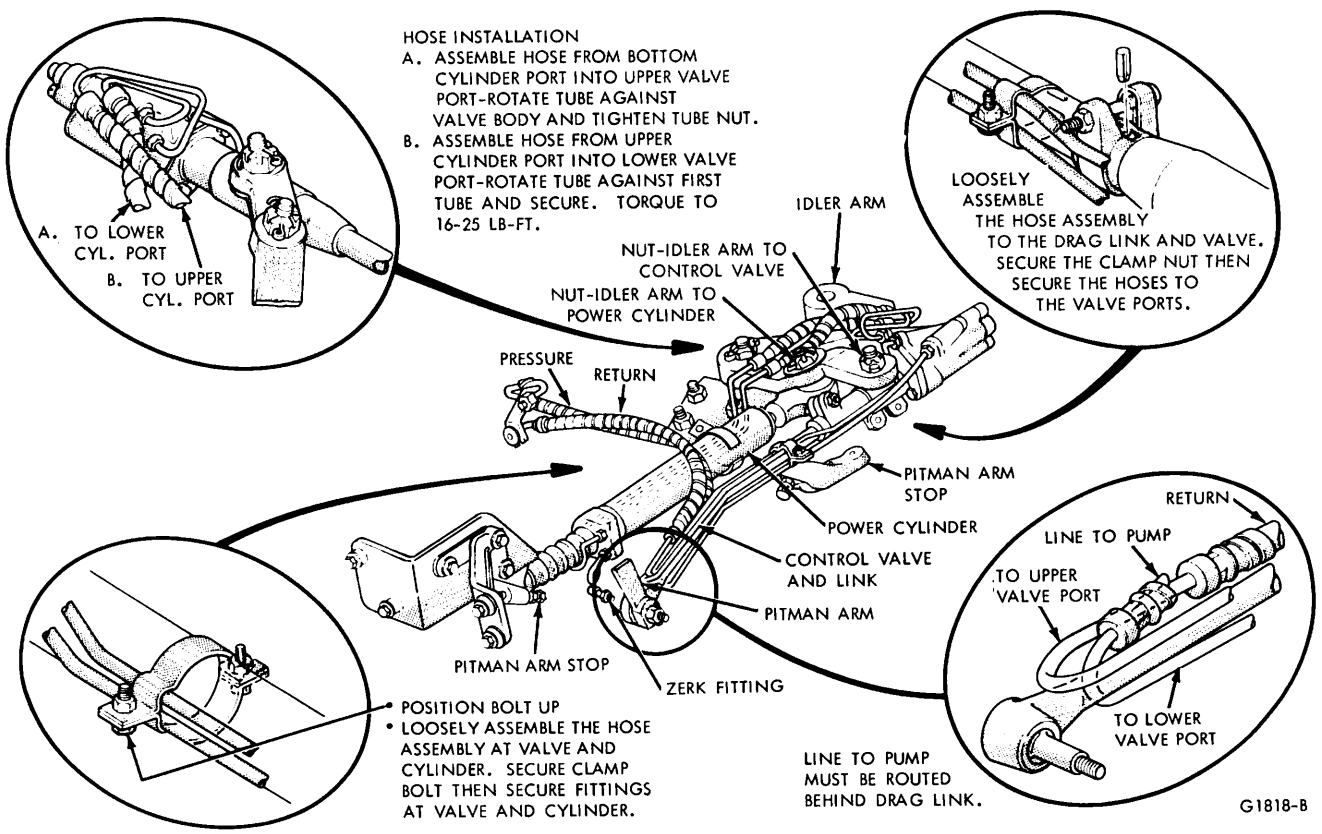

FIG. 3 Power Steering Installation Econoline

ECONOLINE

Removal

1. Remove the castellated nuts and cotter pins from the ball studs attaching the control valve and link to the pitman arm and the tie rods to the idler arm (Fig. 3).
2. Disconnect the control valve and link assembly from the pitman arm and tie rod assemblies from the idler arm.
3. Remove the pal nut, attaching nut, washer and insulator from the end of the power cylinder rod (Fig. 4).
4. Disconnect the two hoses attached to the power steering pump.
5. Remove the five bolts securing the idler arm bracket to the crossmember.
6. Remove the control valve and link, power cylinder, hoses, idler arm, and idler arm bracket as an assembly.

Installation

1. Thread the valve onto the link until the roll pin can be inserted into the notch behind the clamp. Torque 5/16 dia. clamp bolt to 15 ft-lb.
2. Connect the fluid lines to the control valve, and tighten all fittings securely. **Do not overtighten. 5/16 tube nut: 16-25 ft-lb, 3/8 tube nut: 20-30 ft-lb.**
3. Take the control valve and link, power cylinder, hoses, idler arm, idler arm bracket as an assembly and rest it on the engine crossmember.
4. Attach the idler arm bracket to the crossmember using the 7/16-14 x 1 1/2 grade nine bolts and hardened flat washers. Install one washer under the head of the bolt and one under the nut. Torque to 60 ft-lb.
5. Connect the two power steering hoses to the pump.
6. Attach the power cylinder to the front bracket (Fig. 4). Torque the 3/8-24 nut to 21 ft-lb and the pal nut to 45 in-lb.
7. Connect the control valve and link assembly to the pitman arm and the tie rods to the idler arm.
8. Install the castellated nuts and torque the tie rod to idler arm to 45 ft-lb (E-100-200), 60 ft-lb (E-300). All pitman arm nuts require 60 ft-lb. If necessary advance to the next castellation and insert and secure cotter pin.

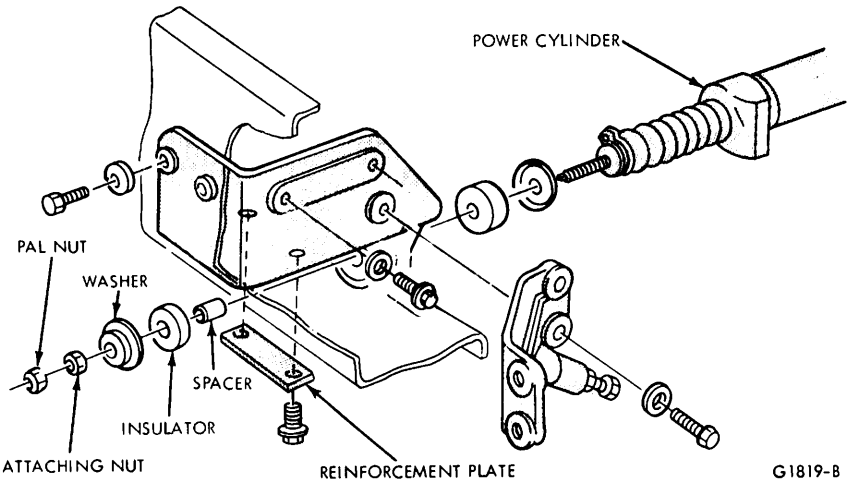

FIG. 4 Cylinder Rod Bracket Attachments

9. Connect the fluid lines to the pump, and tighten all fittings securely.
10. Fill the fluid reservoir with the specified fluid to the full mark.
11. Start the engine and run it at idle speed for about two minutes to warm the fluid in the power steering system.
12. Turn the steering wheel all the way to the left and right several times and check the system for fluid leaks.
13. Increase the engine speed to about 1000 rpm, and turn the steering wheel all the way to the left and right several times.
14. Stop the engine, and check the control valve and hose connections for fluid leaks. Correct the cause of any leaks.
15. Check the fluid level, and refill the reservoir if necessary.
16. Recheck the fluid level after 20 minutes and refill if necessary.

POWER CYLINDER SEAL

C-SERIES

Removal and Installation

The C-Series power cylinder cannot be disassembled. Only the oil seal and snap ring can be replaced.

1. Carefully clamp the power cylinder in a vise in a manner to prevent distortion, and remove the snap ring from the end of the cylinder.
2. Remove as much fluid from the cylinder as possible by stroking the piston rod in and out. Apply air pressure to the retracting port on the cylinder to blow out the seal.
3. After lubricating a new seal with automatic transmission fluid, position it on the piston. Install the seal with a suitable deep socket.
4. Install the retaining snap ring with the sharp edge facing out.

VALVE OR CYLINDER TUBE SEAT

Removal and Installation

If any of the control valve connector seats need replacement, use the following procedures:

1. Tap the existing hole in the tube seat. Use a 3/8 inch starting tap for the large tube seat and a 1/4 inch starting tap for the small seats. **Be sure to remove all metal chips from the tube seat port after tapping.**
2. Place a nut and large flat washer on a bolt of the same size as the tapped hole. The washer must be large enough to cover the tube seat port.
3. Thread the bolt into the tapped hole, and turn the nut to remove the tube seat.
4. Place a new tube seat in the port, and thread a bolt of the same size as the port into the port. Tighten the bolt enough to bottom the seat in the port.

DISASSEMBLY AND ASSEMBLY

The procedures given in Parts 13-33 and 34 under Major Repair Operation also apply to vehicles equipped with power steering.

POWER CYLINDER

ECONOLINE

Disassembly

1. Clamp the power cylinder in a vise, and remove the snap ring from the end of the cylinder (Fig. 5). **Be careful not to distort or crack the cylinder in the vise.**
2. Pull the piston rod out all the way to remove the scraper, bushing, and seals. If the seals cannot be removed in this manner, remove them from the cylinder with a sharp pick. **Take care, when using a pick, not to damage the shaft or seal seat.**

Assembly

When replacing the power cylinder seals, install all of the parts supplied in the repair kit for the cylinder being repaired.

1. Coat the new seals with Lubricant COAZ-19553-A to place the parts shown on the sketch on the piston rod which has been coated with the same grease.
2. Push the rod in all the way and install the parts in the cylinder with a deep socket slightly smaller than the cylinder opening

CONTROL VALVE

C-SERIES

Disassembly

1. Remove the four housing bolts and the drag link assembly (Fig. 7).
2. After unthreading the ball stud plug, remove the outer seat and spacer, the ball stud, and the inner seat, spring, and spring seat.
3. After removing and discarding the nut from the spool bolt, remove the spacer washer, the centering spring seats, the spring, the sleeve, the bushing seal plate, and the shim. **Notice that the spacer washer and the shim are not identical and note their relative positions.**
4. **Separate the valve housing from the outer sleeve, and remove the plate bushing.**
5. Remove the spool bolt and the inner sleeve from the outer sleeve.
6. Press on the spool to free the seals from the housing, and remove the seal and the spool. **Remove the spool very carefully to avoid nicks or scratches.**
7. If necessary to replace the check valve or its O-ring, remove the plug by means of a piece of appropriately bent brass rod inserted through the return port.

Assembly

1. After lubricating the spool seals and the spool with automatic transmission fluid, very carefully position the spool in the valve body. **The grooved valley between the lands must be toward the drag link.**
2. Position the seals. The inner lip of each seal should be toward the valve body.
3. Coat the outer diameter of the inner sleeve with C1AZ-19590-B lubricant and position the spool bolt and the inner sleeve in the outer sleeve. The inner sleeve should slide freely in the outer sleeve.
4. Position the plate bushing in the outer sleeve (Fig. 7), and position the valve body next to the outer sleeve. **Note that the valve body face has a shoulder that mates with the outer sleeve face.**
5. Position the shim (ground surface toward the spool), bushing seal plate, the sleeve, the spring, the spring seats, and the spacer washer on the spool bolt (Fig. 7). Install a new nut, and torque it to specification, then back it off one-sixth of a turn.
6. Position the drag link assembly against the valve body and install the housing bolts.
7. If installing on a vehicle, position the ball stud protruding from the pitman arm into the inner sleeve.
8. Tighten the ball stud plug until the spring is fully compressed. Then, back off the plug to the nearest point where the cotter pin can be inserted.

ECONOLINE

Disassembly

1. Disconnect the 4 fluid line fittings at the control valve, and drain the fluid from the lines.
2. Loosen the clamping nut and bolt at the end of the sleeve (Fig. 8).
3. Remove the roll pin from the control valve and link assembly.
4. Unthread the control valve from the link.
5. Wipe all fluid and loose dirt from the outside of the control valve.
6. Remove the centering spring cap, from the valve housing (Fig. 9). **When holding the control valve for disassembly, use a soft-jawed vise, and clamp the valve only around the sleeve flange to prevent damage to the housing, spool, or sleeve.**

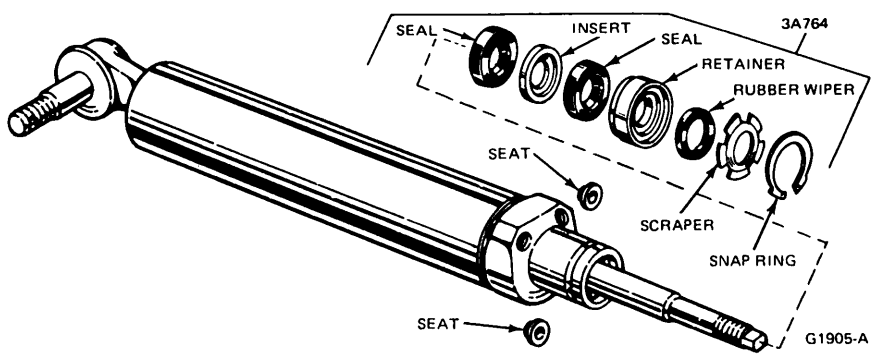

FIG. 5 Power Cylinder Econoline

7. Remove the nut from the end of the valve spool bolt. Remove the washers, spacer, centering spring, adapter, and bushing from the bolt and the valve housing.
8. Remove the two bolts that hold the valve housing and the sleeve together, and separate the housing from the sleeve.
9. Remove the plug from the valve sleeve.
10. Push the valve spool out of the centering spring end of the valve housing, and remove the seal from the spool.
11. Remove the spacer, bushing, and seal from the sleeve end of the valve housing.
12. Drive the stop pin out of the travel regulator stop with a punch. **Pull the head of the valve spool bolt tightly against the travel regulator stop before driving the pin out of the stop (Fig. 10).**
13. Turn the travel regulator stop counterclockwise in the valve sleeve to remove the stop from the sleeve.
14. Remove the valve spool bolt, spacer, and rubber washer from the travel regulator stop.
15. Remove the rubber boot and clamp from the valve sleeve.
16. Slide the bumper, spring, and ball stud seat out of the valve sleeve, and remove the ball stud socket from the sleeve.
17. After removing the return port hose seat, remove the return port relief valve.
18. After removing the plug and O-ring from both ends of the valve body, remove the reaction limiting valve springs, plunger and washers (Fig. 11).

Assembly

Before assembling the control valve, coat all parts except the seals with Automatic Transmission Fluid. Coat the seals with lubricant COAZ-19553-A.

1. Install the reaction limiting valve components, the spring and the components, the springs and the plugs.
2. Install the return port relief valve and the hose seat.
3. Insert one of the ball stud seats (flat end first) into the ball stud socket, and insert the ball stud into the sleeve window opening (Fig. 12).
4. Place the other ball stud seat, spring, and the spacer and bumper (Fig. 9) in the socket. Install and securely

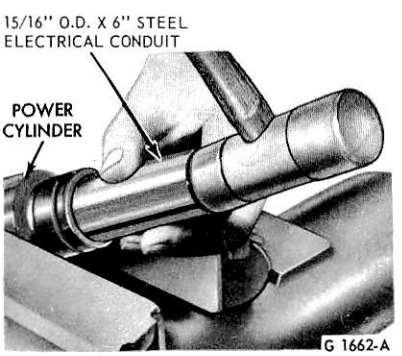

FIG. 6 Installing Power Cylinder Seals

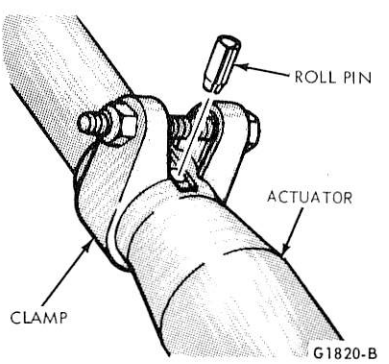

FIG. 8 Disconnecting Control Valve From Link

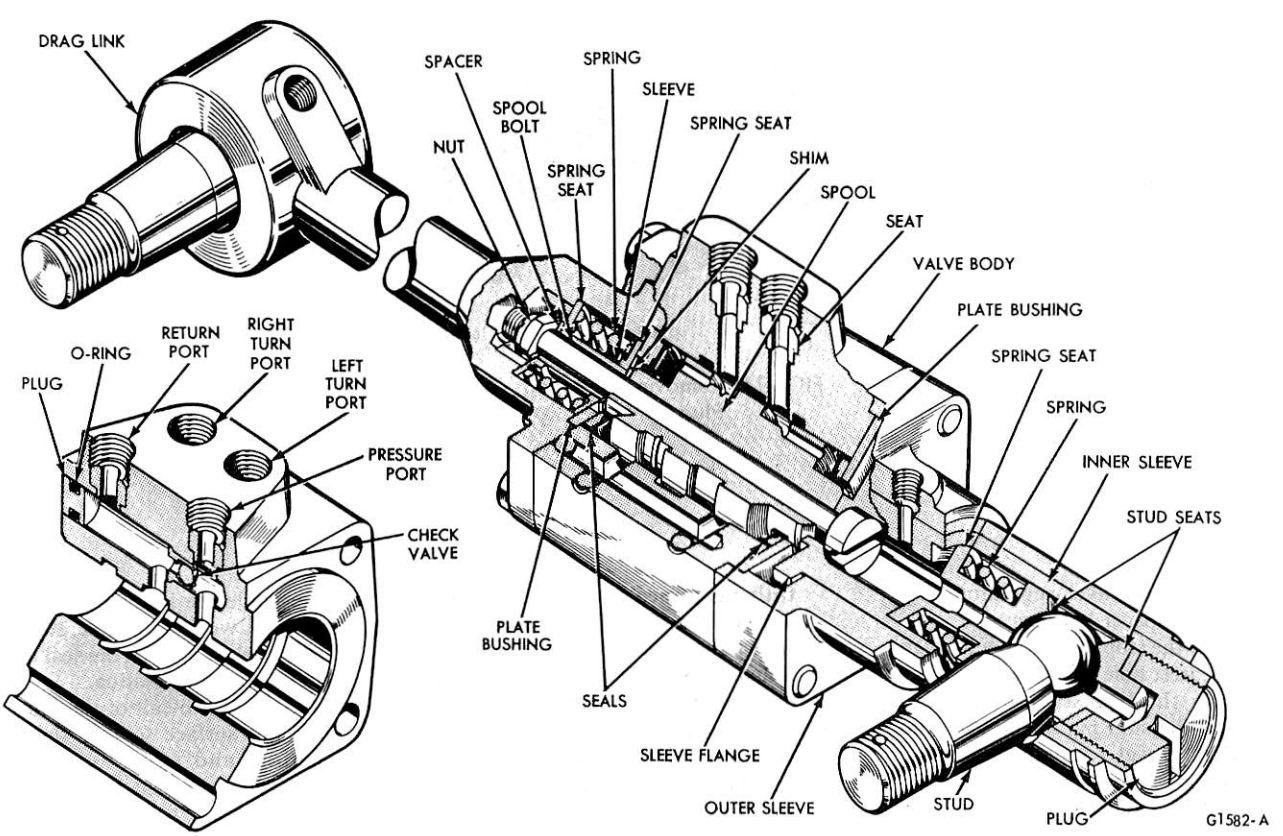

FIG. 7 Control Valve Typical

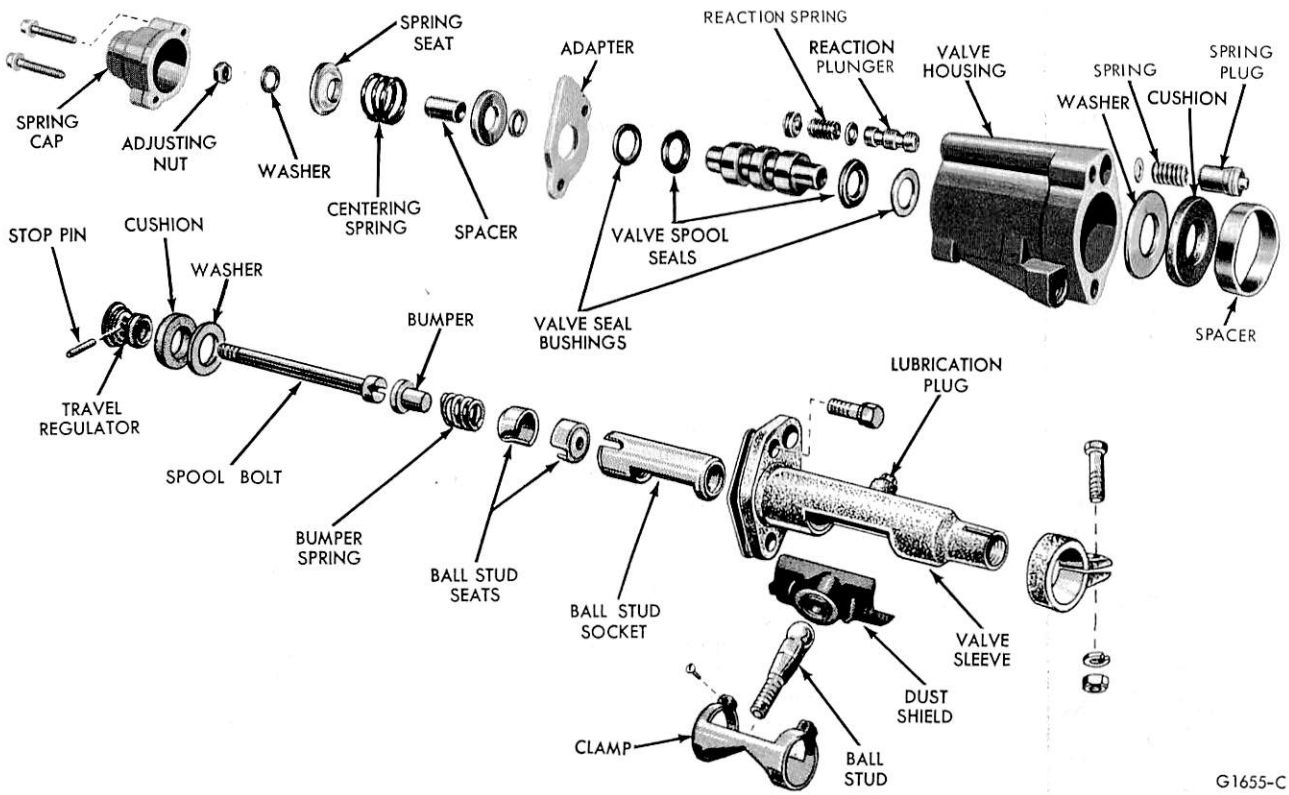

FIG. 9 Control Valve Disassembled

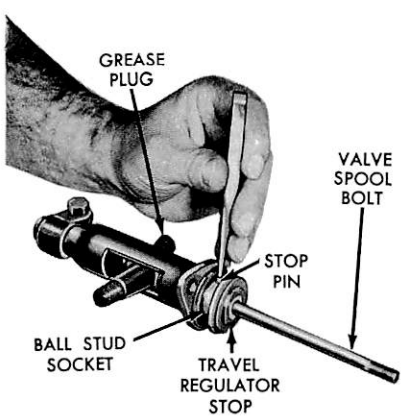

FIG. 10 Removing Stop Pin

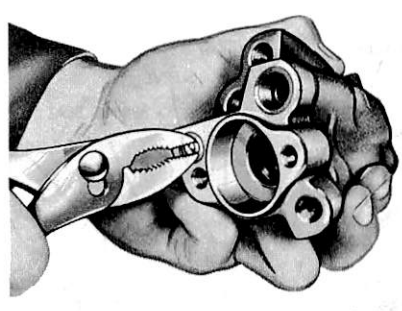

FIG. 11 Removing Reaction Valve Plug

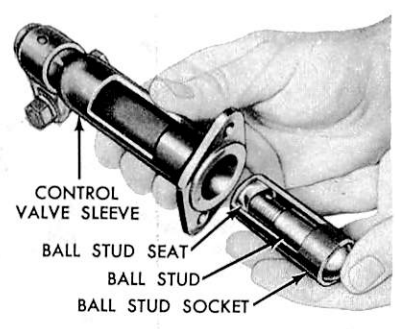

FIG. 12 Installing Ball Socket, Seal and Bracket

tighten the travel regulator stop until the spacer bottoms.

5. Loosen the stop just enough to align the nearest hole in the stop with the slot in the ball stud socket, and install the stop pin in the ball stud socket, travel regulator stop, and valve spool bolt (Fig. 10).
6. Install the rubber boot clamp and the plug on the control valve sleeve. **Make sure that the lubrication fitting is turned on tightly and does not bind on the ball stud socket.**
7. Insert the valve spool in the valve housing. **Rotate the spool while inserting it in the housing (Fig. 13).**
8. Move the spool toward the centering spring end of the housing and place the small seal bushing, and spacer in the sleeve end of the housing.
9. Press the valve spool against the inner lip of the seal and, at the same time, guide the lip of the seal over the spool with a small screwdriver **do not nick or scratch the seal or the spool during installation.**
10. Place the sleeve end of the housing on a flat surface so that the seal, bushing, and spacer are at the bottom end and push down the valve until it stops.
11. Carefully install the spool seal and bushing in the centering spring end

of the housing. Press the seal against the end of the spool, guiding the seal over the spool with a small screwdriver. **Do not nick or scratch the seal or the spool during installation.**

12. Pick up the housing and slide the spool back and forth in the housing to check for free movement.
13. Place the valve sleeve on the housing so that the ball stud is on the opposite side of the housing as the parts for the two power cylinder lines. Install the two bolts in the sleeve, and torque them to specification.
14. Place the adapter on the centering spring end of the housing and install the bushing, washers, spacers, and centering spring on the valve spool bolt.
15. Compress the centering spring, and install the nut on the bolt. Tighten the nut on the bolt. Tighten the nut snug until the spacer bottoms then loosen it not more than 1/4 turn (Fig. 14). The lock pin and ball stud free play can account for 1/4 turn. Make sure that the nut turns (90 degrees) on the threads of bolt. **Excessive tightening of the nut may break the stop pin at the travel regulator stop.**
16. Move the ball stud back and forth in the sleeve slot to check the spool for free movement. Apply COAZ-19553-a (silicone) grease at the sealing areas.
17. Lubricate the two cap attaching bolts. Install the centering spring cap on the valve housing, and torque the two cap bolts to specification.
18. Install the nut on the ball stud so that the valve can be positioned in a vise as shown in Figure 15. Then push forward on the cap end of the valve to check the valve spool for free movement.
19. Turn the valve around in the vise, and push forward on the sleeve end to check the spool for free movement.

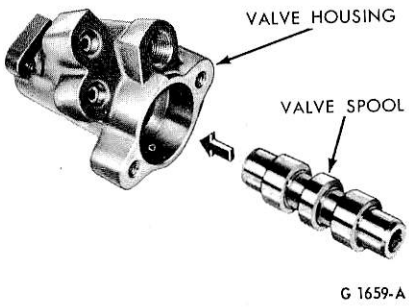

FIG. 13 Inserting Valve Spool

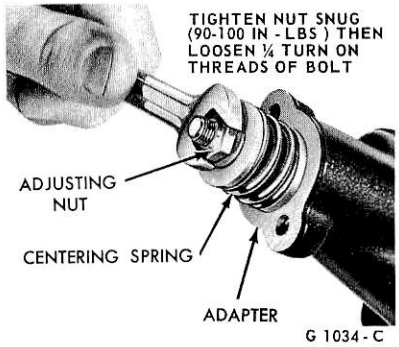

FIG. 14 Adjusting Centering Spring

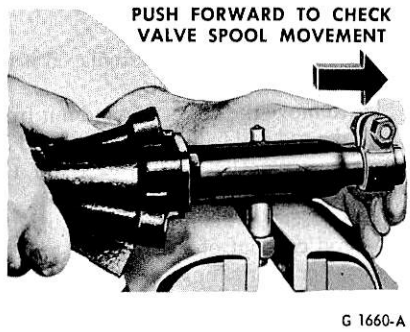

FIG. 15 Inspecting Valve Spool Movement

PART 13-24 Steering Linkage-Manual

This Information Applies To All Models			
COMPONENT INDEX	Page	COMPONENT INDEX	Page
DRAG LINK Removal and Installation	24-02	SPINDLE CONNECTING ROD Removal and Installation	24-02
DRAG LINK AND TIE ROD END SEAL Removal and Installation	24-03	SPINDLE CONNECTING ROD END Removal and Installation	24-01
SPINDLE ARM Removal and Installation	24-03		

REMOVAL AND INSTALLATION

SPINDLE CONNECTING ROD END

ALL EXCEPT F-100-F-250 FOUR-WHEEL DRIVE AND BRONCO

Removal and Installation

A rod end should be replaced if the ball is excessively loose.

1. Remove the cotter pin and nut from the rod end ball stud (Figs. 1 and 2).
2. Remove the ball stud from the spindle arm.
3. Loosen the clamp bolt, and turn the rod end out of the rod.
4. After lubricating the threads of the new rod end, turn it into the rod about the same distance as the old rod end was installed. This will provide an approximate toe-in setting.
5. Install the ball stud in the spindle arm, tighten the nut to the specified torque, and install the cotter pin.
6. Check the toe-in. If necessary loosen the connecting rod end clamps, and adjust the toe-in. **Be sure to tighten the rod end clamps after adjusting the toe-in.** The clamps should be positioned 3/16 inch from the end of the rod, and with the clamp bolt at right angles to the slot in the rod if they are not fixed. The clamp bolt must be vertical, with the head up and the clamp facing forward (on WSeries trucks with the Center Point front axle, no part of the clamp or bolt should be in the 10 to 12 o'clock segment when viewed from the end).

F-100-F-250 FOUR-WHEEL DRIVE, BRONCO

Removal and Installation

1. Raise the vehicle on a hoist and disconnect the drag link from the spindle connecting rod end.

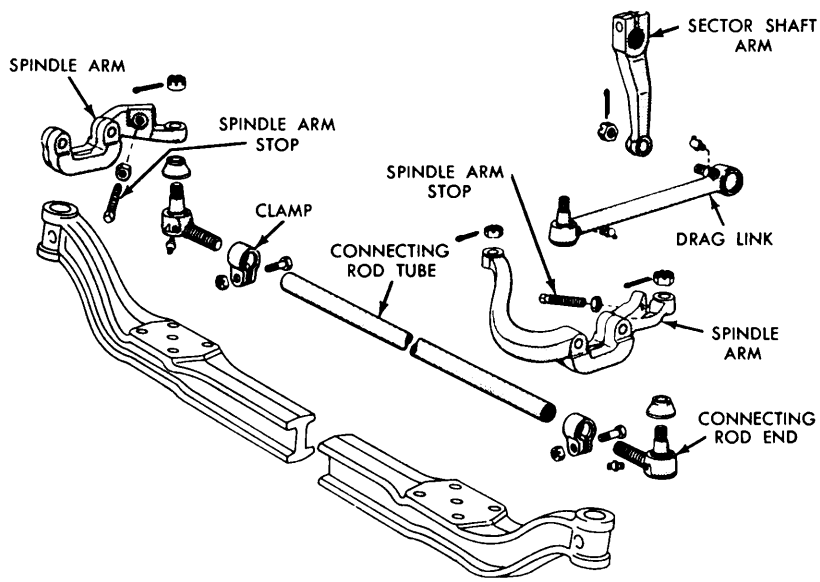

FIG. 1 Typical Steering Linkage with Bolt-On Spindle Arms

2. Disconnect the right spindle connecting rod end from the righ spindle arm.
3. Disconnect the left spindle connecting rod ends from the left spindle arm and remove the spindle connecting rod ends from the vehicle.
4. Position the connecting rod ends in a vise and loosen the connecting rod tube clamps (Fig. 3).
5. Remove the right (short) rod end from the connecting rod tube and remove the tube from the left (long) connecting rod end.
6. Clean and oil all threads on components that are to be re-used.
7. Install the connecting rod tube and clamps on the left spindle connecting rod end. Do not tighten the clamps.
8. Install the right connecting rod end in the tube and remove the assembly from the vise.
9. Position new dust seals (Fig. 3) on the left spindle connecting rod end and position the end to the left spindle arm.
10. Install the connecting rod end attaching nut and torque it to specification. Continue to tighten the nut until the slots on the nut are aligned with the hole in the ball stud and install the cotter pin.

11. Position new dust seals on the right spindle connecting rod end and position the end to the right spindle arm. Install the attaching nut and torque it to specification. Continue to tighten the nut until the nut castellations are aligned with the hole in the ball stud and install the cotter pin.
12. Position new seals (Fig. 3) on the drag link ball stud and position the drag link to the spindle connecting rod end. Install the attaching nut and torque it to specification. Continue to tighten the nut until the nut castellations are aligned with the hole in the ball stud and install the cotter pin.
13. Lubricate the spindle connecting rod ends and the drag link.
14. Check and correct the tire pressures to specification and lower the vehicle.
15. Check and adjust toe-in and tighten the connecting rod tube clamps to specification.

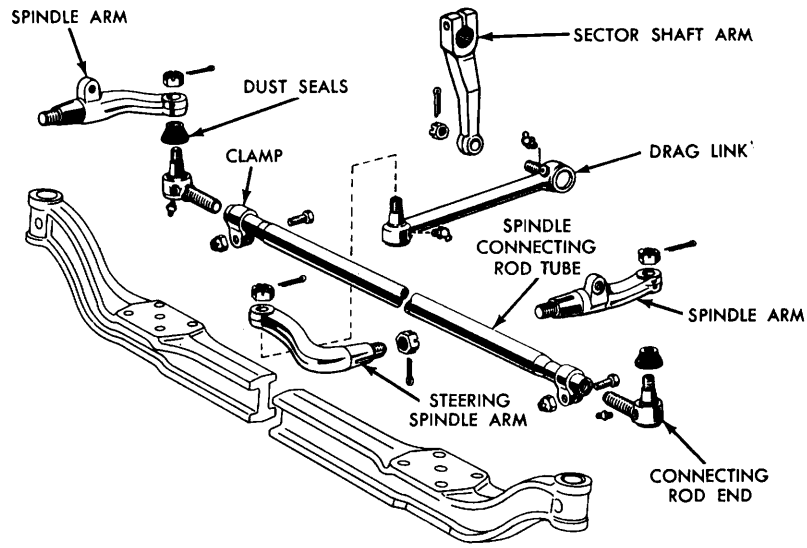

FIG. 2 Typical Steering Linkage with Tapered Spindle Arms

SPINDLE CONNECTING ROD

Removal and Installation

The spindle arm connecting rod should be replaced if the end threads are stripped and/or if it is damaged. **Do not attempt to straighten a bent rod.**

1. Loosen both connecting rod end clamps (Figs. 1 and 2).
2. Unthread the connecting rod until it drops off both ends. **One rod end has a right thread, the other has a left thread.**
3. Lubricate the threads on the connecting rod ends, place the clamps on the new connecting rod, and start the rod about one thread on one end.
4. Start the other end and continue to turn the rod until the rod ends have entered the rod about the same distance as the old rod was installed. This will provide an approximate toe-in setting.
5. Check the toe-in and adjust if necessary. **Be sure to tighten the connecting rod end clamps after adjusting the toe-in.** Position the clamps 3/16 inch from the end of the rod with the clamp bolt at right angles to the slot irod.

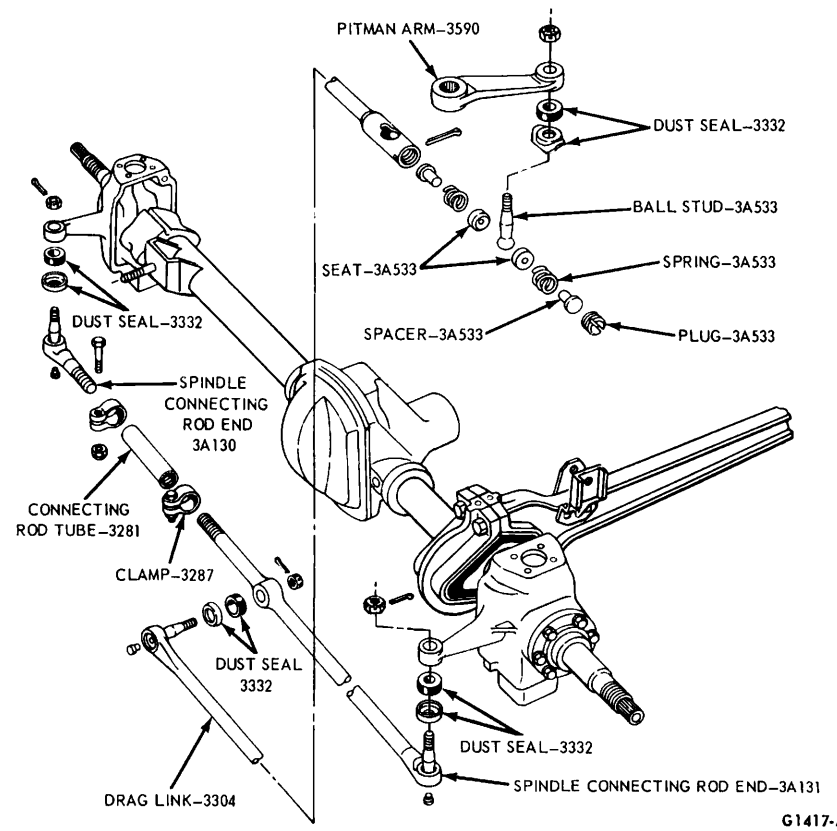

FIG. 3 Steering Linkage Disassembled—F-100

DRAG LINK

Removal and Installation

A drag link should be replaced if a ball stud is excessively loose and/or if the drag link is bent. **Do not attempt to straighten a drag link.**

Drag links on Models F-B-500-750 with manual or power steering and 5000 through 7000 pound front axles will have the word axle stamped on the end of the link adjacent to the ball stud socket. This end is to be attached to the axle steering arm (front of vehicle).

NON-ADJUSTABLE

1. Remove the cotter pins and nuts from the ball studs.
2. Remove the ball studs from the arms.

3. Position the drag link ball studs in the arms, and install the nuts. Torque the nuts to specification and install the cotter pins.

ADJUSTABLE

1. Remove the cotter pin and nut from the ball stud.
2. Remove the ball stud.
3. Remove the nut and bolt from the dust shield.
4. After removing the cotter pin and the threaded plug, remove the drag link.
5. Clean the ball seats and inspect them for wear.
6. Position the drag link ball stud, and install the nut. Torque the nut to specification and install the cotter pin.
7. Install the drag link on the sector arm ball, and assemble the socket.
8. Install the bolt and nut on the dust shield.
9. Check the ball stud for end play. If end play exists, the spring, seats or ball stud are probably damaged and should be replaced.

DRAG LINK AND TIE ROD END SEAL

F-,B-,LN-500-750 WITH 5000-7000 LB. AXLES, L-,LT-,LTS-,LN-,LNT-800 AND UP

Removal and Installation

1. Remove the old dust seal.
2. Wipe out all old grease from around the ball stud (do not use solvent).
3. Pack C1AZ-19590-B Lithium base grease liberally around the ballstud.
4. On units with the one piece dust seal, press the new dust seal into place using a deep socket or other suitable tool that will fit over the boot and press on the lower horizontal flange. On units with the keystone clamp, press the new seal into place on the socket body, slip the keystone clamp down to the shoulder of the seal and securely crimp into place.

SPINDLE ARM

Removal and Installation

A spindle arm should be replaced if it is bent and/or damaged in any way. **Do not attempt to straighten a bent spindle arm.**

BOLT-ON TYPE ARM

1. Remove the front wheel and brake drum.
2. Remove the cotter pin and nut from the connecting rod (and/or the drag link on the left side) ball stud, and remove the ball stud from the spindle arm.
3. Remove the cotter pin, lock washers, and nuts from the spindle arm attaching bolts (Fig. 1), and remove the spindle arm. It is not necessary to remove the spindle arm attaching bolts unless they are damaged and must be replaced.
4. Install the steering stop adjusting bolt, and lock nut in the spindle arm, if so equipped.
5. Position the spindle arm and lock washers on the attaching bolts, install and tighten the nuts to the specified torque, and install the cotter pin.
6. Install the connecting rod (and/or the drag link on the left side) ball stud in the spindle arm, tighten the nut to the specified torque, and install the cotter pin.
7. Install the front brake drum and wheel, and check the toe-in. **Be sure to tighten the connecting rod end clamps if the toe-in is adjusted.**
8. Adjust and lock the steering stop adjusting bolts.

TAPERED ARM TYPE

1. Remove the connecting rod end ball stud or the drag link ball stud from the spindle arm.
2. Remove the cotter pin and attaching nut from the spindle arm, and remove the spindle arm from the spindle. Drive out the spindle arm if necessary (Fig. 2).
3. Install spindle arm in the spindle. The spindle hole is slotted to position the spindle arm with a key.
4. Install the spindle arm attaching nut and tighten it to the specified torque. Install a new cotter pin through the nut and spindle arm.
5. Install the connecting rod end ball stud or the drag link ball stud in the spindle arm and install and tighten the ball stud nut to specified torque. Install a new cotter pin through the nut and ball stud.
6. Check the toe and adjust if necessary.
7. Adjust and lock the steering stop adjusting bolts.

PART 13-33 Manual Steering Gear—Recirculating Ball

Applies To F-100, 250, 350 (4 x 2), Econoline Only

COMPONENT INDEX	Page	COMPONENT INDEX	Page
SPECIFICATIONS	33-07	STEERING WHEEL	
		Removal and Installation	33-03
STEERING GEAR		WORM AND SECTOR	
Description	33-01	Adjustment	33-02
Disassembly and Assembly	33-04	WORM BEARING PRELOAD	
Removal and Installation	33-02	Adjustment	33-02

DESCRIPTION

STEERING GEAR

Figs 1 and 2 show the recirculating ball type steering gear. The steering system combines the low friction parallelogram linkage and the conventional recirculating ball-nut steering gear. Friction is minimized by the ball-nut, which is mounted on the steering worm (or shaft), where all steering action is accomplished by free rolling ball bearings between the nut and worm. There is no direct contact between the steering worm and the ball-nut assembly.

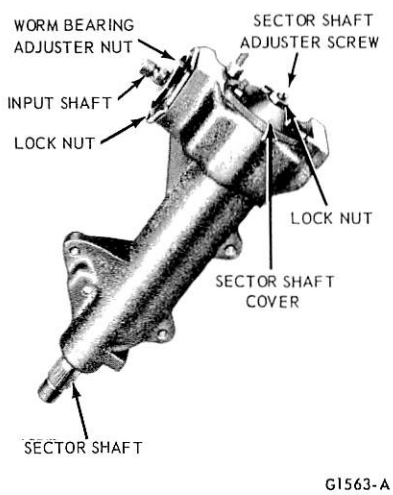

FIG. 1 Manual Steering Gear — Recirculating Ball — F-100 thru F-350 (4 x 2)

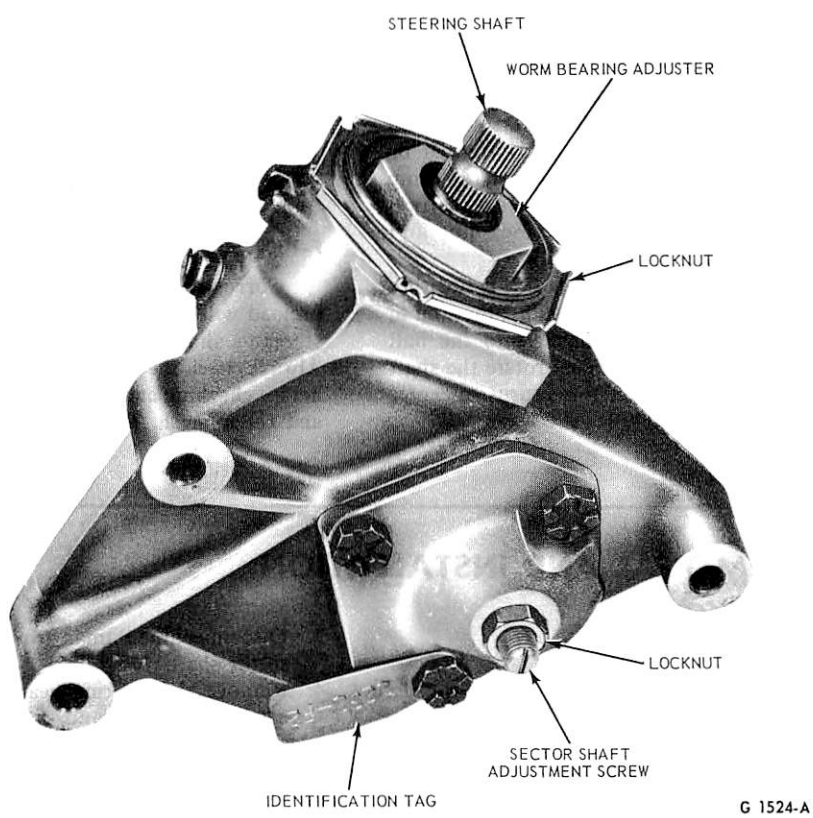

FIG. 2 Manual Steering Gear — Recirculating Ball — Econoline

ADJUSTMENTS

STEERING WORM AND SECTOR

ECONOLINE

The steering gear must be removed from the vehicle to properly make a preload and mesh load adjustment. Therefore it should be determined that the steering column is aligned properly and not causing excessive turning effort before attempting to adjust the gear.

The ball nut assembly and the sector gear must be adjusted properly to maintain minimum steering shaft end play (a factor of preload adjustment) and minimum backlash between sector gear and ball nut. There are only two possible adjustments within the recirculating ball-type steering gear, and **these should be made in the following order to avoid damage or gear failure.**

1. Loosen the nut which locks the sector shaft adjusting screw (Fig. 2) and turn the adjusting screw counterclockwise approximately three turns.
2. Measure the worm bearing preload by attaching an in-lb torque wrench to the input shaft (Fig. 3). Read the torque required to rotate the input shaft approximately 1 1/2 turns either side of center. If the torque or preload is not within specifications, adjust the steering gear as explained in the next step.
3. Loosen the input shaft bearing adjuster lock nut, and tighten or back off the bearing adjuster to bring the preload within the specified limits. Tighten the lock nut and recheck the preload.
4. Turn the input shaft slowly to either stop. **Turn gently against the stop to avoid possible damage to the ball return guides.** Then rotate the shaft approximately three turns to center the ball nut.

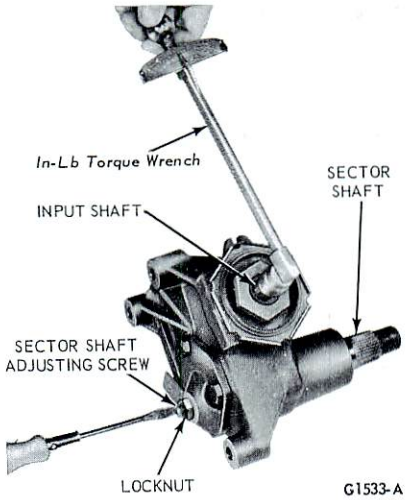

FIG. 3 Setting Mesh Load

5. Turn the sector adjusting screw clockwise until the specified pull is obtained to rotate the worm past its center (Fig. 3). With the steering gear position on center and the sector shaft retained to prevent rotation, check the lash between the ball nuts, balls and worm shaft by applying a 15 in-lb torque on the steering gear input shaft, in both right and left turn directions. Total travel of the wrench should not exceed 1 1/4 inches when applying a 15 in-lb torque on the steering shaft.
6. Tighten the sector adjusting screw lock nut, and recheck the backlash adjustment.

WORM BEARING PRELOAD

F-100-350 (4 X 2)

Correctly adjusted worm bearing preload will help to eliminate excessive steering shaft and worm end play. **Always check the worm bearing preload before checking and adjusting the worm and roller mesh. The worm and roller mesh should always be checked and adjusted after checking and adjusting the worm bearing preload.**

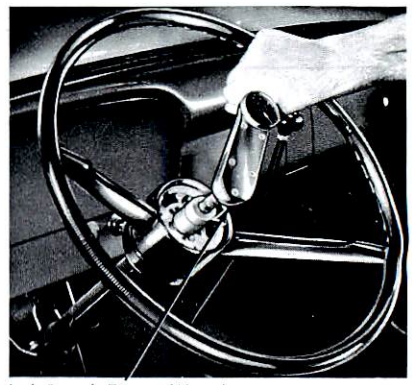

FIG. 4 Checking Steering Gear Preload

1. Remove the Pitman arm from the steering gear sector shaft.
2. Disconnect the horn wire at the horn relay. Remove the horn button and spring from the steering wheel.
3. Turn the steering wheel to the end of its travel.
4. Place an in-lb torque wrench on the steering wheel nut (Fig. 4). Measure the lowest torque required to turn the wheel at a constant speed. The lowest torque reading is the worm bearing preload. If the torque (preload) is not within specification (at the end of this Part), adjust as described in step 5.
5. Loosen the steering shaft bearing adjuster lock nut and tighten or loosen the bearing adjuster (Fig. 1) to bring the preload to specifications. Tighten the steering shaft bearing adjuster lock nut and recheck the preload.

REMOVAL AND INSTALLATION

STEERING GEAR

F-100 THRU F-350 (4 X 2)

Removal

1. Remove the bolt that attaches the flex joint to the steering gear (Fig. 5). Remove the brake line bracket.
2. Raise the front of the vehicle and install safety stands.
3. Disconnect the Pitman arm from the sector shaft.
4. Remove the steering gear housing attaching bolts, and remove the steering gear.

Installation

1. With the steering wheel spokes aligned and the sector shaft in the center position, install the steering gear. Torque all attaching bolts to specification. Reinstall the brake line bracket to the steering gear cover studs.
2. With the wheels straight ahead, connect the Pitman arm to the sector shaft.
3. Remove the steering gear filler plug and housing lower cover bolt. After turning the steering wheel to the left

to move the ball nut away from the filler hole, fill the steering gear with the correct lubricant. Fill the gear until lubricant comes out of the housing cover lower bolt hole. Install the filler plug and the cover bolt. Torque the bolt to specification.

ECONOLINE

Removal

1. Raise the vehicle on a hoist.
2. Remove the attaching bolt from the lower half of the flex coupling (Fig. 6).
3. Disconnect the Pitman arm from the drag link with Tool 3290-C.
4. While supporting the steering gear, remove the three gear-to-side rail attaching bolts and flat washers. Lower the gear.
5. Remove the Pitman arm attaching nut. Remove the Pitman arm with Tool T64P-3590-F.

Installation

1. Center the input shaft (approximately three turns from either stop).
2. Place the Pitman arm on the sector shaft making sure that it is pointing downward. Install and torque the attaching nut to specification.
3. Fill the steering gear to the proper level with the specified lubricant.
4. Raise the steering gear into position making sure that the splines on the input shaft engage the flexible coupling. Install and torque the three special (grade 8) mounting bolts and special washers (hardened) to specification.
5. Connect the drag link to the Pitman arm and torque the nut to specification. Install a new cotter pin.
6. Install the flexible coupling attaching bolt and torque it to specification.

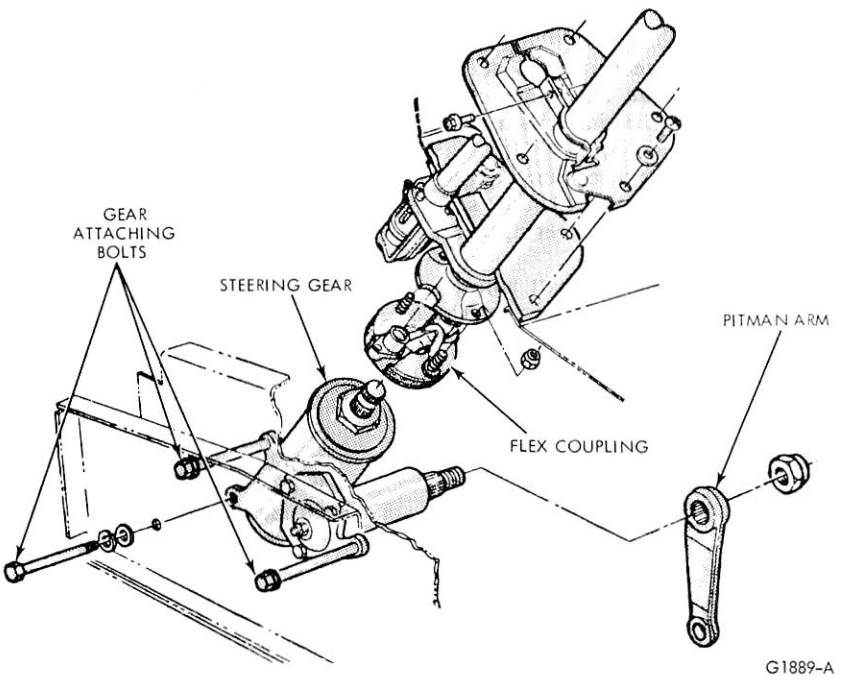

FIG. 6 Steering Gear Installation — Econoline

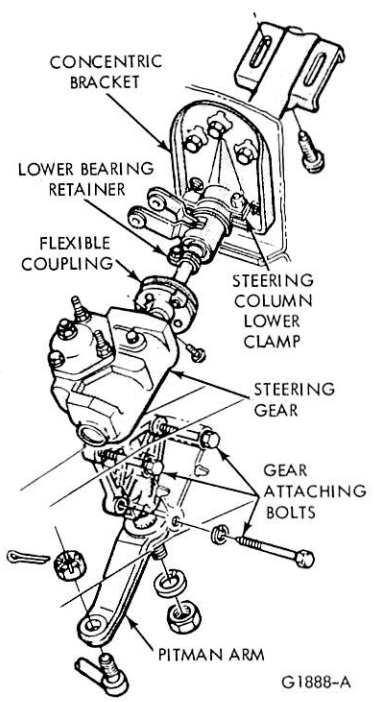

FIG. 5 Steering Gear Installation — F-100, 250 and 350

STEERING WHEEL

Removal and Installation

1. Disconnect the horn wire at the bullet connector below the instrument panel.
2. Remove the horn button or ring by pressing down and turning it counterclockwise.
3. Remove the steering wheel nut. Install a steering wheel puller (Fig. 7), and remove the steering wheel.
4. Make sure the steering column upper bearing sleeve and spring are in position at the top of the steering shaft if so equipped. Position the steering wheel and press it onto the shaft. On F-Series, with the wheels straight ahead, position the steering wheel on the steering shaft with the clear vision opening at the top. This will point the lower spoke straight down.
5. Install a new steering wheel attaching nut and torque to specification.
6. Stake the steering shaft at one point with a center punch to prevent the nut from coming off.
7. Install the horn button and connect the horn wire.

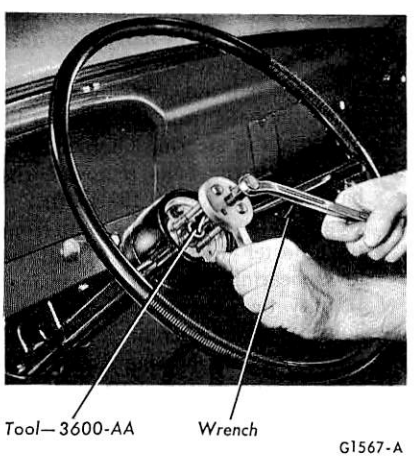

FIG. 7 Removing Steering Wheel — Typical

DISASSEMBLY AND ASSEMBLY

STEERING GEAR

Disassembly

1. Rotate the steering shaft to the center position and remove the steering shaft bearing adjuster lock nut (Figs. 8 and 9).
2. Loosen the worm bearing adjuster nut and remove the adjuster assembly and the steering shaft upper bearing.
3. Remove the sector shaft adjuster screw lock nut and loosen the adjuster screw about one turn (Figs. 9 and 10).
4. Remove the sector shaft cover attaching screws and studs and remove the cover by turning the adjuster screw clockwise. **Keep the shim with the adjuster screw.**
5. Remove the sector shaft from the housing.
6. Carefully pull the steering shaft and ball nut from the housing and remove the steering shaft lower bearing. **To avoid possible damage to the ball return guides, keep the ball nut from running down to either end of the worm. Disassemble the ball nut only if there is indication of binding or tightness.**
7. Remove the ball nut guide retainer and guides from the ball nut. **Keep the guide side of the ball nut up until ready to remove the balls.**
8. Turn the ball nut over, and remove all of the balls from the ball nut by rotating the steering shaft side to side. With the balls removed, the ball nut will slide off the shaft.
9. Remove the upper bearing cup from the adjuster (Figs. 8 and 9) and the lower bearing cup from the housing. It may be necessary to tap the housing or adjuster on a block of wood to jar the bearing cups loose.
10. Remove the sector shaft seal and lower bearing from the housing with Tool T62F-3576-A (Fig. 11). Then, with the same tool, remove the upper bearing on F-100, 250 and 350 (4 x 2) vehicles. **Remove the sector shaft bearings only if preliminary inspection shows damage.**
11. Clean and inspect the housing and all parts.

Assembly

1. If the sector shaft bearings have been removed, install the sector shaft lower bearing in the housing with Tools T62F-3576-A and T64K-3576-B as shown in Figs. 12, 13 and 14. Then, install a new seal in the same way.
2. On F-100, 250 and 350 (4 x 2) vehicles turn the gear housing over and install the upper bearing with the same tools. Apply enough C3AZ-19578-A lubricant to fill the pocket in the housing between the sector shaft bearings.
3. Install the steering shaft upper bearing cup in the adjuster and the lower bearing cup in the housing (Figs. 8 and 9). If the seal in the bearing adjuster was removed, install a new seal. Swab the inside diameter of the ball nut and the outside diameter of the worm and gear with lubricant C3AZ-19578-A prior to assembly.
4. Insert the ball guides (Figs. 8 and 9) into the holes of the ball nut, tapping them lightly with the wood handle of a screwdriver if necessary to seat them.
5. Insert one half of the balls into the hole in the top of each ball guide. It may be necessary to rotate the shaft slightly one way, then in the opposite direction to distribute the balls in the circuit.
6. After the balls are installed, install the ball guide clamp. Torque the screws to specification. Check the worm shaft to make sure that it rotates freely.
7. Coat the threads of the steering shaft bearing adjuster, the housing cover bolts, and the sector adjusting screw with a suitable oil-resistant sealing compound. **Do not apply sealer to female threads, and especially avoid getting any sealer on the steering shaft bearings.**
8. Coat the worm bearings, sector shaft bearings and gear teeth with gear lubricant.
9. Clamp the housing in a vise, with the sector shaft axis horizontal, and position the steering shaft lower bearing in its cup.
10. Position the steering shaft and ball nut assemblies in the housing.
11. Position the steering shaft upper bearing on the top of the worm and install the steering shaft bearing cup adjuster. Install the adjuster lock nut with the flat side against the bearing adjuster. Leave the nut loose.
12. Adjust the worm bearing preload (Figs. 15 and 16) using an in-lb torque wrench. See the Specification Section at the end of this Part for the specified preload. New steering gear assemblies are factory-adjusted to specification.
13. Position the sector adjusting screw and adjuster shim, and check the end clearance which should not exceed 0.002 inch between the screw head and the end of the sector shaft. If clearance is greater than 0.002 inch, add enough shims to reduce the end play to within the 0.002 inch tolerance.
14. Start the sector shaft pilot into the housing cover and then, using a screwdriver through the hole in the cover, turn the adjusting screw counterclockwise to pull the pilot into the cover.
15. Install a new gasket on the housing cover.
16. Rotate the steering shaft until the ball nut teeth are in position to mesh with the sector gear, tilting the housing so that the ball nut will tip toward the housing cover opening.
17. Lubricate the sector shaft journal and install the sector shaft and cover.
18. With the housing cover turned out of the way, fill the gear with the specified amount of gear lubricant. Push the housing cover and sector shaft assemblies into place, and install the top housing cover bolts. **Do not tighten the cover bolts until it is certain that there is some lash between ball nut and sector gear teeth. While holding or pushing the cover away from the ball nut, torque the bolts to specification.**
19. After loosely installing the sector shaft adjusting screw lock nut, adjust the sector shaft mesh (backlash) as shown in Fig. 17. See Specifications section for the specified mesh load.

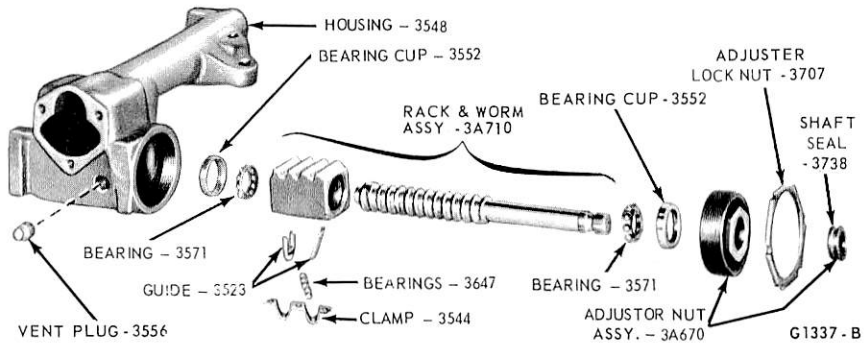

FIG. 8 Steering Shaft and Related Parts — Recirculating Ball Gear — F-100 thru F-350 (4 x 2)

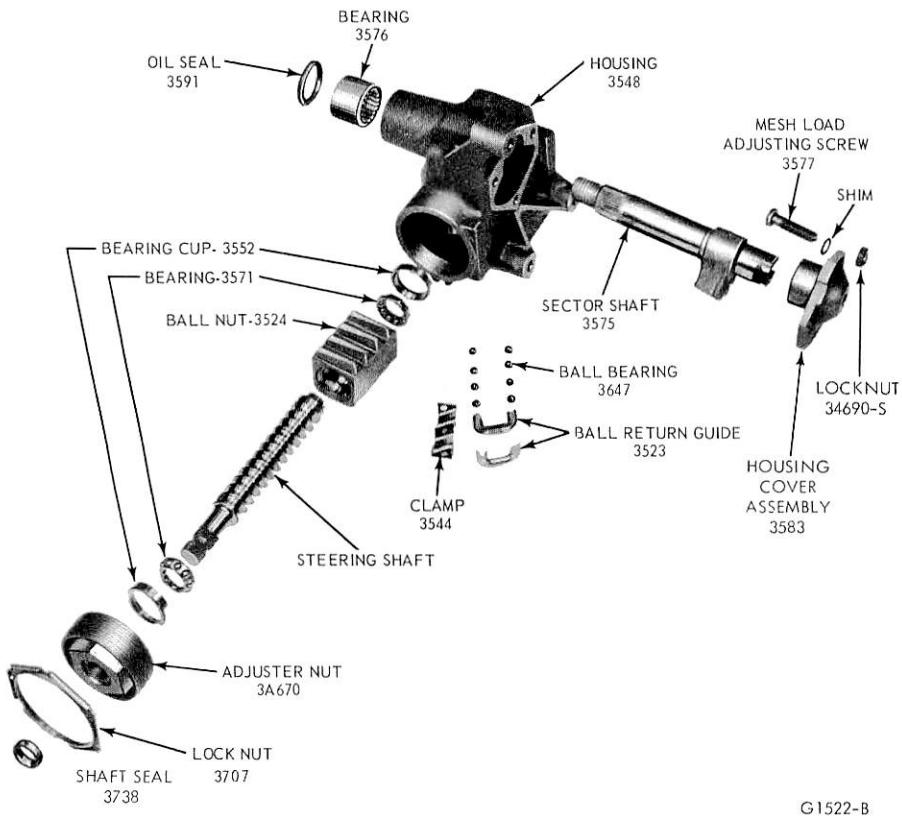

FIG. 9 Steering Gear Disassembled — Econoline

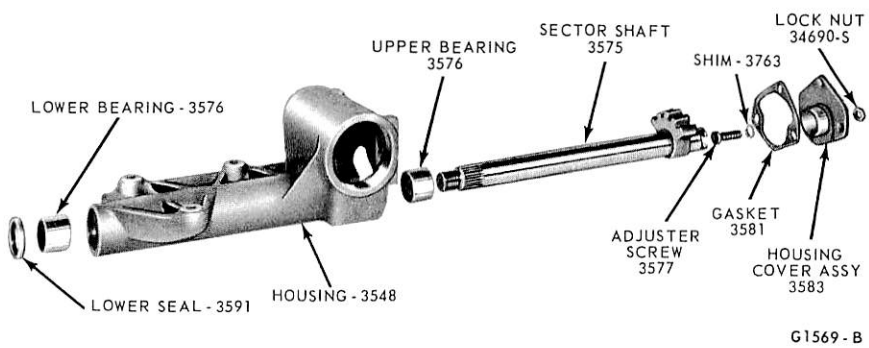

FIG. 10 Sector Shaft and Housing — Recirculating Gear — F-100 thru F-350

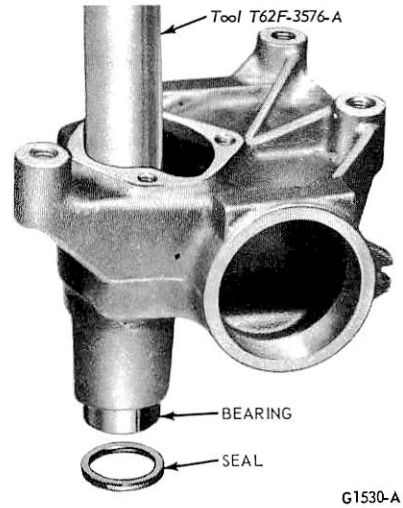

FIG. 11 Removing Sector Shaft Bearing — Econoline — F-100 thru F-350 Similar

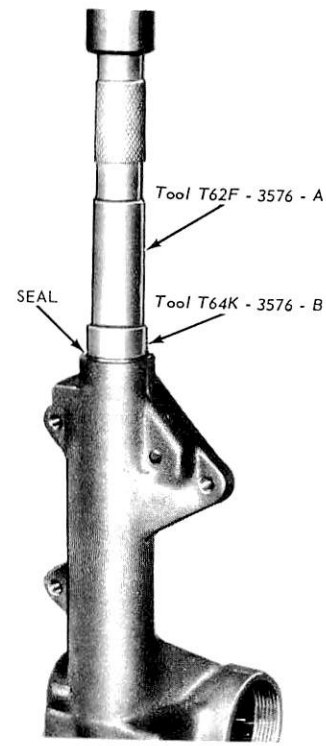

FIG. 12 Installing Sector Shaft Lower Bearing and Seal — Recirculating Ball Gear — F-100 thru F-350 (4 x 2)

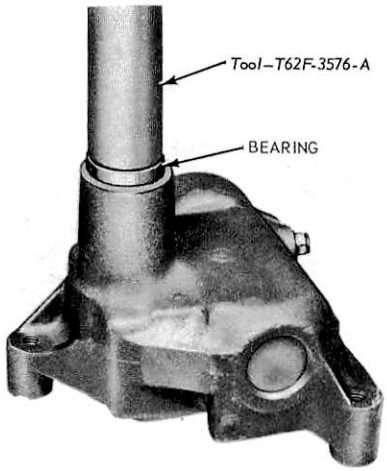

FIG. 13 Installing Sector Shaft Bearing — Econoline

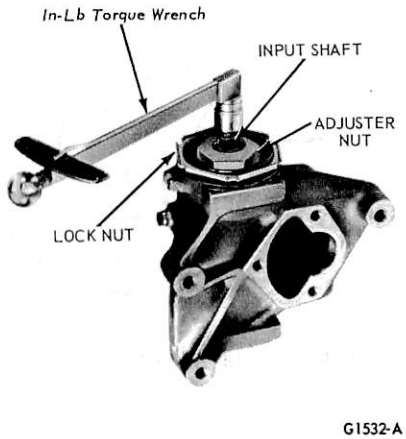

FIG. 16 Checking Worm Bearing Preload — Econoline

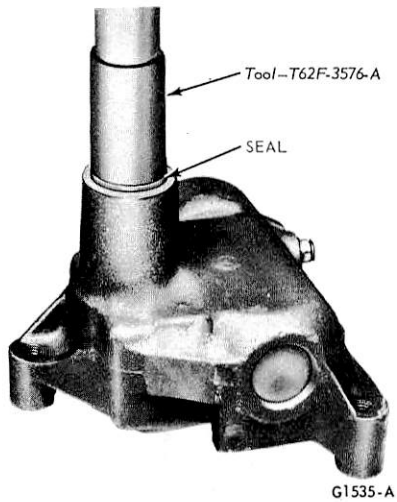

FIG. 14 Installing Sector Shaft Seal — Econoline

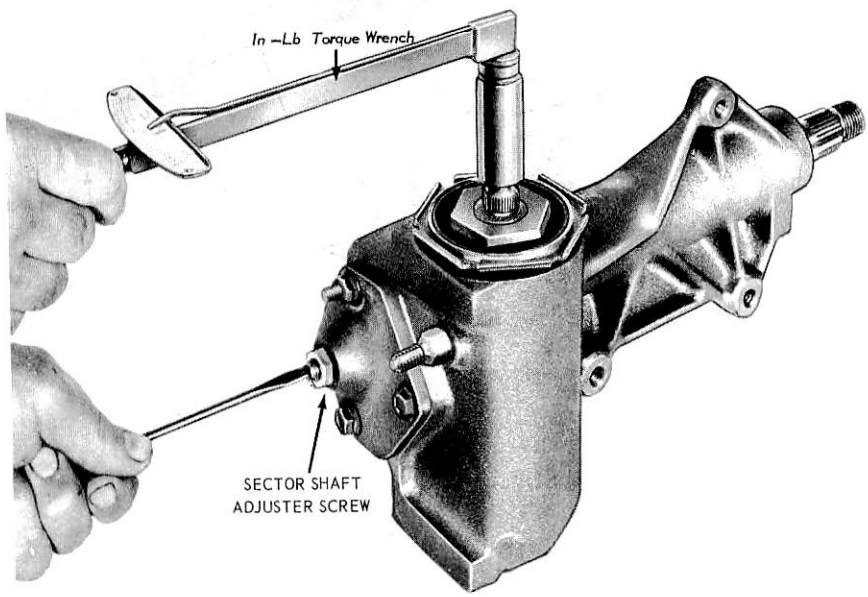

FIG. 17 Adjusting Sector Shaft Mesh Load — Recirculating Ball Gear — F-100 thru F-350 (4 x 2) — Econoline Similar

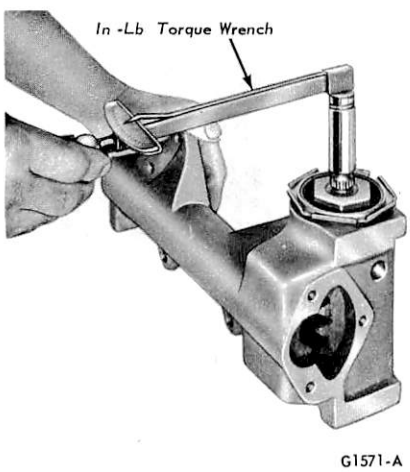

FIG. 15 Checking Worm Bearing Preload — Recirculating Ball Gear — F-100 thru F-350 (4 x 2)

SPECIFICATIONS

SERVICE SPECIFICATIONS

RECIRCULATING BALL GEAR

Model	SMA-S: Econo. Pwr. Assist, SMA-H, K: Truck, SMA-G: Econo.		Worm Bearing Preload (In-Lb) ③	4–5 (Man.) 3–4 (Pwr. Assist)
Ratio	24:1 (Manual)	16:1 (Econo. Power Assist)	Total Center Meshload (In-Lb) ②	9–10 (Man.) 8–9 (Pwr. Assist)
Turns of Steering Wheel (Lock to Lock) ①		6 (Man.) 4 (Pwr Assist)	Minimum Meshload Over Preload (In-Lb)	2 (Pwr. Assist Only)
Lubricant		C3AZ-19578-A	Adjusting Screw to Bottom of Sector Shaft T-Slot Clearance	.000–.002 Inch
Lubricant Capacity (Lb.)		.87 ± .07		

① Gear Only – not attached to Pitman Arm. ② Required to rotate input shaft and worm assembly past the center high point.
③ Torque required to rotate input shaft at approximately 1-1/2 turns either side of center (gear out of vehicle or Pitman arm disconnected)

TORQUE SPECIFICATIONS

RECIRCULATING BALL GEAR

Application	Ft-Lb	In-Lb	Application	Ft-Lb	In-Lb
Sector Shaft Cover Bolt	17-25 (Truck) 30-40 (Econo)		Preload Adjuster Locknut	60-80	
Sector Shaft Cover Stud (Truck)	17-25		Meshload Adjusting Screw Locknut	32-40	
Ball Return Guide Clamp Screw		18-42	Lubricant Fill Plug and Vent	3-9	

① Minimum of one thread must remain exposed when installed.

SPECIAL SERVICE TOOLS

Tool No.	Description	Tool No.	Description
T64P-3590-F	Steering Arm Remover	T64K-3576-B	Sector Shaft Needle Bearings and Seal Remover and Replacer Adapter
T62F-3576-A	Sector Shaft Bearing Remover and Replacer	T67L-3600-A	Steering Wheel Remover

CG 1878-B

PART 13-34 Manual Steering Gear-Worm and Roller

Does Not Apply To F-100, 250, 350 (4 x 2), Econoline

COMPONENT INDEX	Page	COMPONENT INDEX	Page
SPECIFICATIONS	34-11	STEERING WHEEL	
		Removal and Installation	34-04
STEERING GEAR		WORM AND ROLLER MESH	
Description	34-01	Adjustment	34-02
Disassembly and Assembly	34-05	WORM BEARING PRELOAD	
Removal and Installation	34-03	Adjustment	34-01

DESCRIPTION

STEERING GEAR

F-100-250 (4 X 4) AND BRONCO

The steering gear is a worm and roller type gear. It is attached to the frame side rail forward of the front axle and steering linkage.

The worm, which is part of the input shaft rotates on ball bearings and preload is obtained by shim gaskets between the end plate and the housing (Fig. 1). The sector shaft and roller, which is combined as an integral unit, rotates in bushings in the lower part of the housing. Worm and roller adjustment is controlled by an adjusting screw in the top end of the sector shaft. This screw is threaded into the housing cover and is used to adjust the mesh of the worm and roller by pushing the sector shaft roller against the worm.

All Models—500 Thru 9000, F-250 (4 X 4) and P-Series

The worm and roller type steering gear assemblies (manual steering) used on all models are similar in design but differ in size and method of attachment to the frame. A cutaway view of a typical steering gear is shown in Fig. 2.

The steering linkage consists of the steering sector shaft (Pitman arm), the drag link, idler arm (C-Series with power steering only), the spindle connecting rod, and the spindle arms.

ADJUSTMENTS

WORM BEARING PRELOAD

F-100 4-Wheel Drive

1. Disconnect the Pitman arm from the sector shaft with T64P-3590-F.
2. Disconnect the wire socket at the horn relay. Remove the horn button and spring.
3. Turn the steering wheel to the end of its travel in either direction.
4. Place an in-lb torque wrench on the steering wheel attaching nut, and measure the torque required to keep the wheel moving at a constant rate for approximately 1/4 to 1/2 turn. If the torque, or preload is not within specifications, remove or add gasket shims between the worm shaft bearing retainer cover and the steering gear housing (Fig. 1) to adjust the worm bearing preload to specification. Install the cover and torque the attaching bolts to specification. Then, recheck the worm preload to be sure it has not changed after the cover bolts have been tightened. **If erratic readings are experienced, disconnect the steering shaft joint at the steering gear. Then, check the torque required to rotate the steering shaft. If the torque is measurable, add it to the worm bearing preload specification.**
5. After adjusting the worm preload, turn the gear to the other end of its travel and recheck the preload.
6. Check the steering gear lubricant level and add lubricant as necessary (Part 13-01).

Bronco

1. Remove the steering gear as described in Removal and Installation.
2. Loosen the mesh and roller adjusting lock nut. Back off adjusting screw 2-3 turns.
3. Place an in-lb torque wrench on the input shaft. Check the torque required to rotate the input shaft 1 1/2 turns either side of center. If the torque or preload is not within specifications, remove or add gasket shims between the worm shaft bearing retainer cover and the steering gear housing (Fig. 1) to

adjust the worm bearing preload to specification.
4. Tighten the mesh and roller adjusting screw 2-3 turns and perform the worm and roller mesh adjustment.
5. Install the steering gear as described in Removal and Installation.
6. Check the steering gear lubricant level and add lubricant as necessary (Part 13-01).

F-B-L-W-C-500-9000

1. Remove the steering gear from the vehicle.
2. Place a 12 point, 13/16 inch socket on the lower steering shaft serrations. Attach an in-lb torque wrench to the socket and turn the steering gear at a constant speed. The lowest torque reading is the worm bearing preload. If the torque is not within specification (at the end of this Part), make the adjustment as outlined in step 3.
3. To adjust the worm bearing preload, remove or add gasket shims between the worm shaft bearing retainer (Fig. 2) to bring the worm bearing preload to the proper specifications. install the cover and torque to specifications.
4. Adjust the worm and roller mesh preload.
5. Install the steering gear in the vehicle.

WORM AND ROLLER MESH

The worm bearing preload should always be checked and adjusted, if necessary, before the worm and roller mesh is checked and adjusted.

1. Remove the steering gear from the vehicle.
2. Place an in-lb torque wrench on the steering gear input shaft. Measure the torque required to turn the steering wheel through the straight ahead (high point) position. The highest torque reading is the worm and roller mesh preload. If the preload is not within specification (at the end of this Part), adjust as outlined in steps 3 through 5.
3. To adjust the mesh, loosen the adjusting screw lock nut on the side of the steering gear housing (Fig. 3), and adjust the worm and roller mesh, or by turning it outward (counterclockwise) to loosen the mesh.
4. After adjusting the mesh, hold the adjusting screw stationary with a screwdriver and tighten the lock nut.
5. Recheck the mesh adjustment. If the mesh is still not correct, repeat the adjustment procedure.
6. Install the steering gear and fill it to the correct level with the specified lubricant.

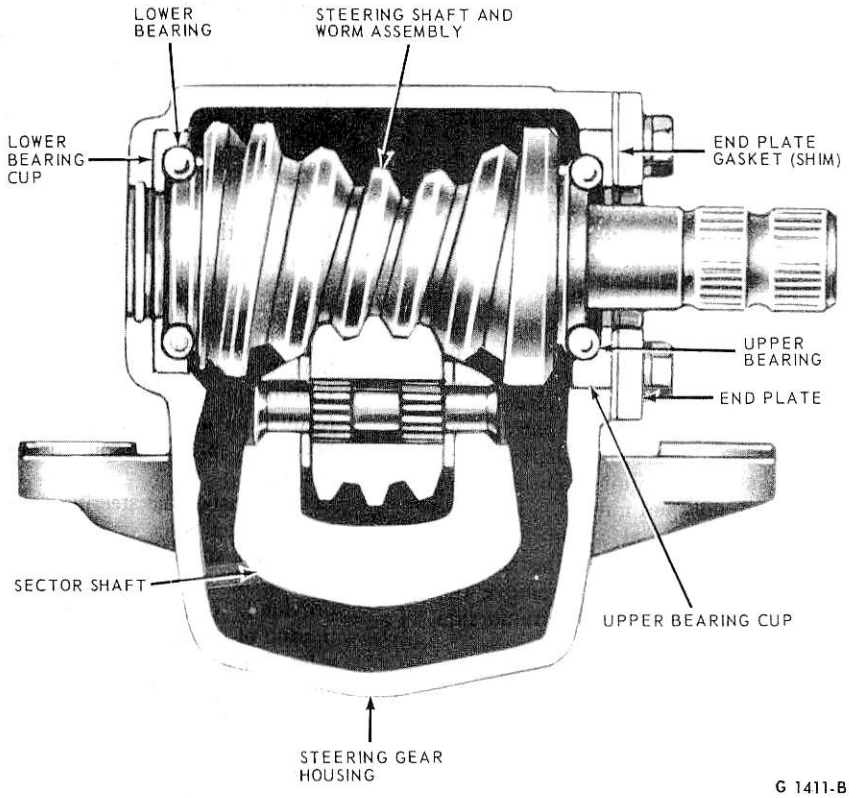

FIG. 1 Steering Gear — F-100-250 (4 x 4) and Bronco

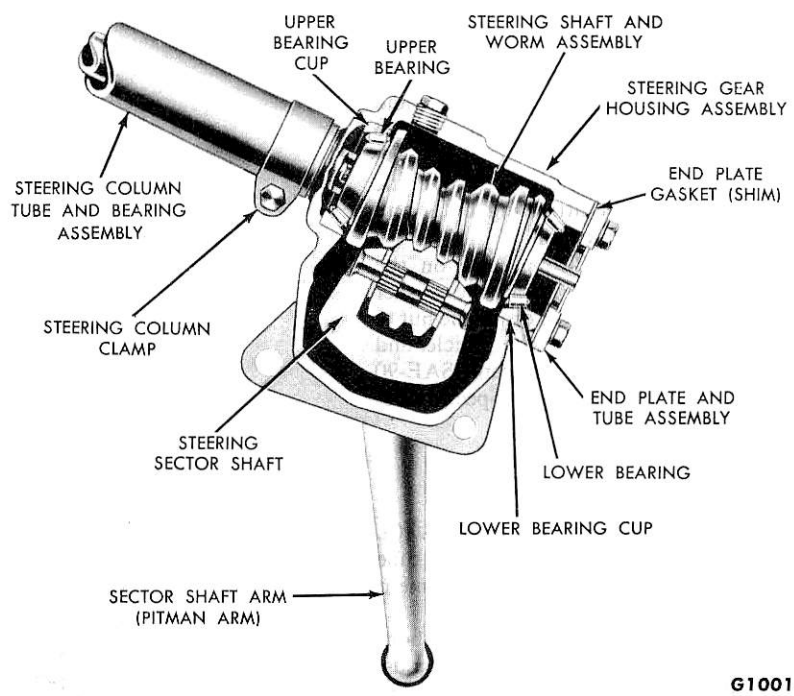

FIG. 2 Typical Manual Steering Gear — Sectional View

REMOVAL AND INSTALLATION

STEERING GEAR

BRONCO, F-100-250 (4 X 4)

Removal

1. Raise the vehicle on a hoist and remove the Pitman arm attaching nut and lock washer.
2. Remove the Pitman arm from the sector shaft with Tool T64P-3590-F.
3. Remove 3 steering gear-to-frame side rail attaching bolts and nuts and lower the vehicle.
4. Remove the flex coupling bolt and nut from the coupling clamp (Fig. 4). Loosen the clamp on the steering shaft at the end of the steering column and separate the coupling from the steering gear input shaft by pushing the steering shaft toward the steering column. Discard the clamp, bolt and nut.
5. Remove and discard the flex coupling clamp from the steering gear input shaft, and remove the steering gear from the frame side rail.

Installation

1. Position the steering gear to the frame side rail and install the attaching bolts and nuts.
2. Position the steering shaft flex coupling and a new clamp to the steering gear input shaft and install the clamp bolt and nut (Fig. 4). Torque the bolt and nut to specification.
3. Position a new steering shaft clamp at the end of the steering column and tighten the bolt and nut to specification.
4. Raise the vehicle and torque the steering gear attaching bolts and nuts to specification.
5. Position the Pitman arm on the sector shaft and install the washer and attaching nut. Torque the nut to specification, lower the vehicle, and fill the gear with lubricant (SAE-90 EP Engine Oil, Ford Spec.M-568-C).

P-SERIES

Removal

1. Remove the steering wheel (Fig. 10).
2. Remove the steering column tube bracket bolts from the instrument panel.
3. Raise the front of the vehicle about 10 inches, and install safety stands.
4. Remove the sector shaft arm from the sector shaft, and remove the steering gear attaching bolts (Fig. 5). If necessary, spread the sector shaft opening in the arm.
5. Loosen the steering column lower clamp, and disconnect the horn wire.
6. Move the steering gear to the left, and remove it from beneath the vehicle.

Installation

1. Position the steering gear in the steering column tube, and partially tighten the lower clamp.
2. Install the steering gear attaching bolts finger tight, and connect the horn wire.
3. Install the sector shaft arm and torque the nut to specification. If necessary, spread the split portion of the arm.
4. Loosely install the steering column tube bracket bolts.
5. Install the steering wheel.
6. Adjust the steering column tube to provide 1/16 inch clearance between the top of the tube and the steering wheel hub, and tighten the instrument panel bolts.
7. Tighten the low clamp bolt, and torque the steering gear attaching bolts to specification.
8. Lower the vehicle.

F-B-500-750, 6000-7000

Removal

1. Loosen the steering column lower clamp and slide the clamp down (Fig. 6).
2. Remove the bolt and nut retaining the Pitman arm from the sector shaft using Tool T64P-3590-F.
3. Remove the nuts, bolts, cotter pin and the strap retainer on all models except those equipped with 9000 lb axles, that hold the steering gear housing on the frame side member.
4. Remove the steering gear assembly from under the vehicle.

Installation

1. Install the steering gear assembly from underneath the vehicle and tighten the mounting bolts and nuts (and strap retainer if so equipped) finger tight.
2. Connect the steering column lower clamp and torque to specification.
3. Torque the two upper steering gear housing-to-frame mounting nuts to specification.
4. Install the bottom nut and cotter pin and torque to specification (50-70 ft-lb).
5. Install the Pitman arm on the sector shaft and torque the retaining nut to specification.

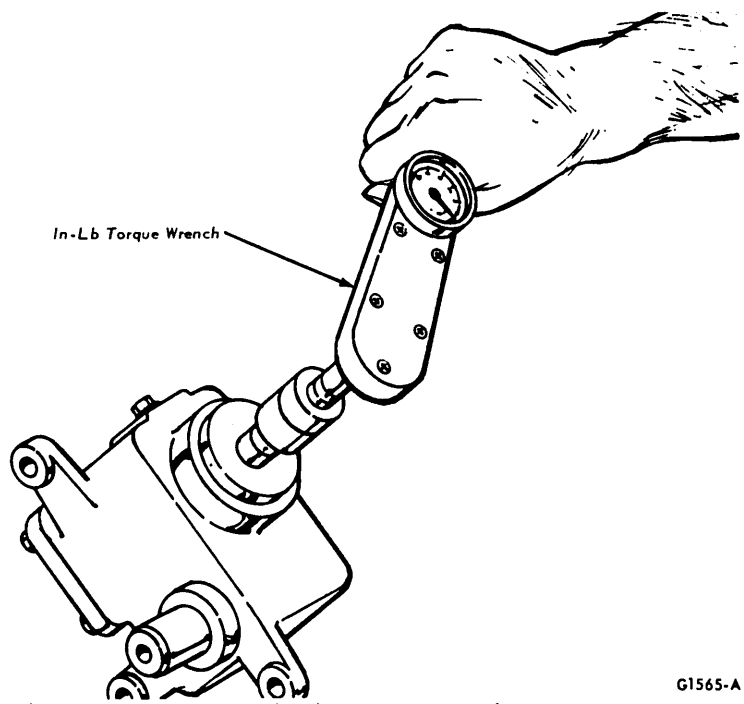

FIG. 3 Checking Steering Gear Preload — F-B-L-W-and C-500-9000

L-N-500-900, 6000-9000, L-LT-LNT-W-WT-800-900, 8000-9000

Removal

1. Remove the bolt, nut and cotter pin retaining the Pitman arm to the sector shaft and remove the Pitman arm from the sector shaft using Tool T64P-3590-F.
2. Remove the bolt and nut retaining the U-joint to the steering gear input shaft and slide the joint up off the input shaft (Figs. 7 and 8).
3. Remove the bolts, nuts, cotter pins and strap retainers (if so equipped) retaining the steering gear or the steering gear bracket to the frame side rail and remove the steering gear.

Installation

1. Position the gear (or gear and bracket) to the side rail. Install the bolts, nuts and strap retainers if so equipped and torque to specification. Install the cotter pins (advance to next castellation if necessary after torquing to specification).
2. With the wheels and steering wheel in the straight ahead position place the steering shaft U-joint on the steering gear input shaft. Install a new bolt and nut to retain. **Make certain the bolt is engaged in the slot of the steering gear input shaft. Torque to specification.**
3. Position the Pitman arm to the steering gear sector shaft and install the bolt and nut. On W and L-Series trucks, the slash marks on the Pitman arm and the sector shaft should be aligned when full serrations are evident. Torque to specification and install the cotter pin (advance to next castellation if necessary).

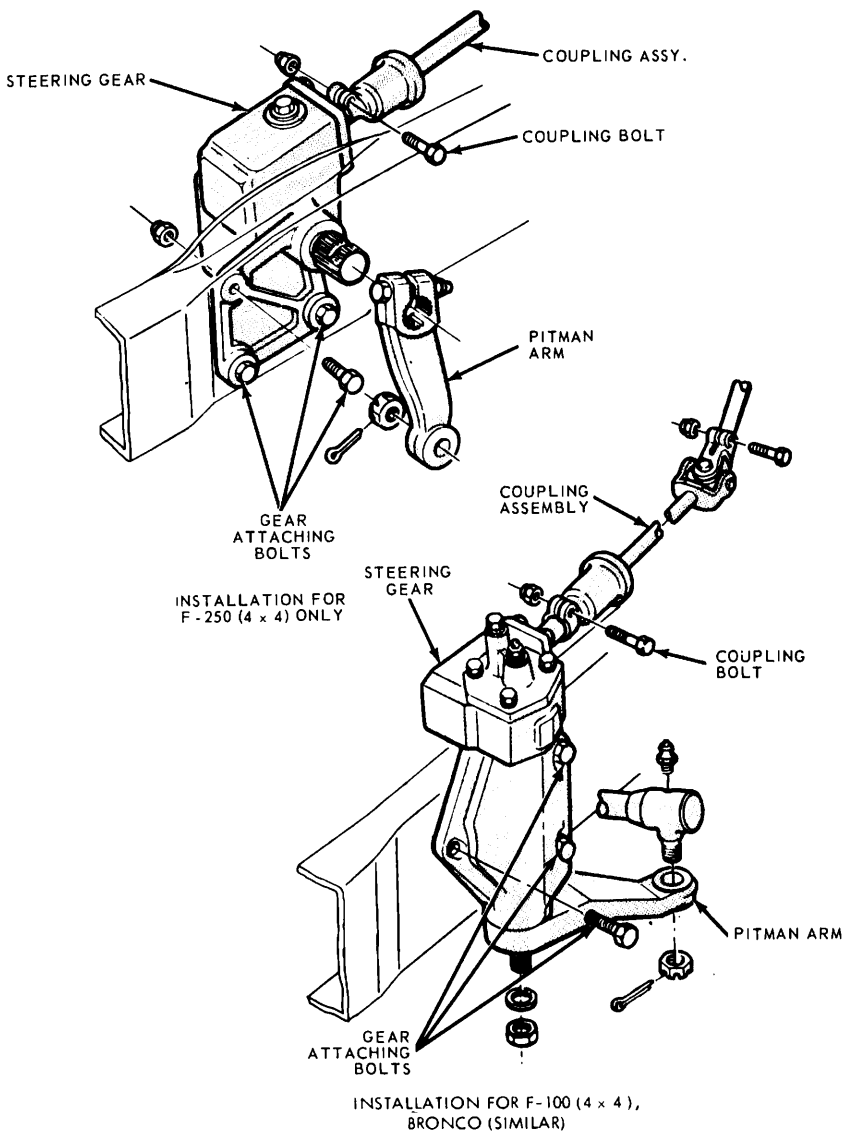

FIG. 4 Steering Gear Installation — Bronco, F-100, F-250 (4 x 4)

C-SERIES

Removal

Tilt the cab up.

1. Remove the horn wire brush from the steering column just below the instrument panel bracket.
2. Remove the universal joint-to-steering gear attaching bolt (Fig. 9).
3. Turn the wheels to the right, remove the sector arm (Pitman arm) attaching nut and bolt, and pry the sector arm off the sector shaft. If necessary, spread the sector shaft opening in the arm.
4. Remove the steering gear housing attaching bolts, and remove the steering gear.

Installation

1. Position the steering gear housing on the frame side rail, install the housing attaching bolts, torque the nuts to specifications, and install the cotter pins to lock the nuts.
2. Center the steering gear input shaft. Turn the steering wheel as required to position the lower spoke in a vertical position.
3. Have a helper push the steering shaft down until the universal joint is in position on the steering gear input shaft. Install and tighten the universal joint attaching bolt and lock nut.
4. Install the sector arm (Pitman arm) on the sector shaft, making sure the lock bolt slot in the sector shaft lines up, and install the bolt and nut. Torque the nut to specifications. If necessary, spread the sector shaft opening in the arm.
5. Connect the horn wire, and test the horn operation.
6. Road test the vehicle for proper steering operation.

STEERING WHEEL

Removal and Installation

1. Disconnect the horn wire at the bullet connector below the instrument panel. On a C-Series vehicle, disconnect the horn wire at the bullet connector under the instrument panel just beyond the horn brush.
2. Remove the horn button or ring by pressing down and turning it counterclockwise.

3. On all C-N-F-W Series trucks (except F-B Medium), remove the set screw located in one of the wheel pulling holes. Remove the steering wheel nut. Install a steering wheel puller (Fig. 10), and remove the steering wheel.
4. Make sure the steering column upper bearing sleeve and spring are in position at the top of the steering shaft if so equipped. Position the steering wheel and press it onto the shaft. On F-and P-Series with the wheels straight ahead, position the steering wheel on the steering shaft with the clear vision opening at the top. This will point the lower spoke straight down. On B-Series, install the steering wheel with the clear vision opening at the bottom and the single spoke pointing straight up.
5. Install a new steering wheel attaching nut and torque to specification.
6. On all C-N-F-W Series trucks (except F-B Medium), install the set screw in one of the wheel pulling holes. Select the hole with the minimum clearance to the nut which should be advanced to allow space along the flat.
7. Install the horn button and connect the horn wire.

DISASSEMBLY AND ASSEMBLY

Fig. 11 shows the special tool applications for steering gears covered in this section. The gears can be identified by the output shaft diameter.

STEERING GEAR

F-100-250 (4 X 4), BRONCO AND P-SERIES

Disassembly

1. Mount the steering gear housing in a vise and center the gear.
2. Remove the four shaft cover bolts (Fig. 12). Place a drain pan under the sector shaft.
3. Remove the sector shaft assembly and shaft cover. It may be necessary to lightly tap the end of the output shaft with a soft mallet to break the shaft cover loose.
4. Remove the shaft cover gasket and separate the shaft cover from the roller bearing assembly by removing the adjusting screw lock nut and turning the adjusting screw clockwise.
5. Remove the end plate bolts, the end plate and the shims.
6. Remove the lower bearing cup and ball bearing assembly by pressing on the end of the input shaft. If the bearing cup cocks, do not use force. Tap the bearing cup lightly in place and repeat the procedure.
7. Remove the upper bearing cup and ball bearing assembly.
8. Remove and discard the oil seals.

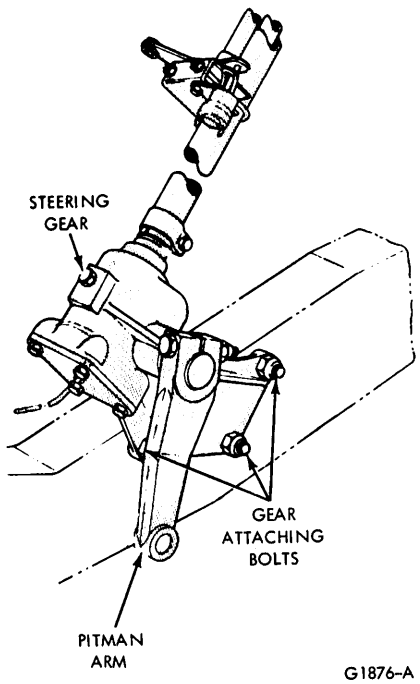

FIG. 5 Steering Gear Installation — P-Series

Assembly

If the sector shaft-to-bushing clearance exceeds .010 inch, replace them with Tool T61B-3576-A (Fig. 13).

1. Place the upper ball bearing assembly over the worm and input shaft assembly and into the upper bearing cup.
2. Insert the worm and shaft into the housing.
3. Place the lower ball bearing assembly on the worm and assemble the lower bearing cup.
4. Install the shims and worm cover to the housing and insert the cover bolts. Do not torque the bolts immediately but rotate the input shaft with one hand while tightening the worm cover bolts with the other to prevent damaging the worm bearing surfaces if the initial amount of shims is inadequate. When a light preload is obtained, torque the bolts to 18-22 ft-lb and check the preload.
5. Insert the adjusting screw into the shaft cover from inside and draw the roller bearing assembly into position until the shaft bottoms in the shaft cover. Reverse the adjusting screw rotation one full turn.
6. Position the gasket and shaft cover onto the housing, insert the cover bolts and torque to specification.
7. Install and tighten the adjusting screw lock nut to 16-20 ft-lb. Check preload.
8. Press in new shaft seals, fill the gear with lube and install the filler plug.

ALL MODELS EXCEPT F-100-250 (4 X 4), BRONCO AND P-SERIES

Disassembly

1. Mount the steering gear housing in a vise, then rotate the input shaft until it is centered.
2. Loosen the sector shaft adjusting screw lock nut.
3. Place a drain pan under the housing. Then loosen the end plate attaching screws so the end plate can be pulled away from the housing far enough to drain the lubricant.
4. Remove the screws that hold the sector cover (Fig. 14) on the housing. Then remove the cover and sector shaft as an assembly.
5. Remove the housing end plate, the worm lower bearing cup, and the lower bearing.
6. Remove the worm shaft through the bottom of the housing. Take the worm upper bearing off the shaft.
7. If required, remove the worm shaft upper bearing cup from the steering gear housing with the tool listed in Fig. 11.
8. If required, remove the sector shaft bushing or bearing and oil seal (Fig. 15) with the tool listed in Fig. 11.
9. Remove the worm shaft oil seal (Fig. 16).
10. Install the sector shaft and cover in a soft-faced vise, remove the adjusting screw lock nut, turn the adjusting screw in, and remove the

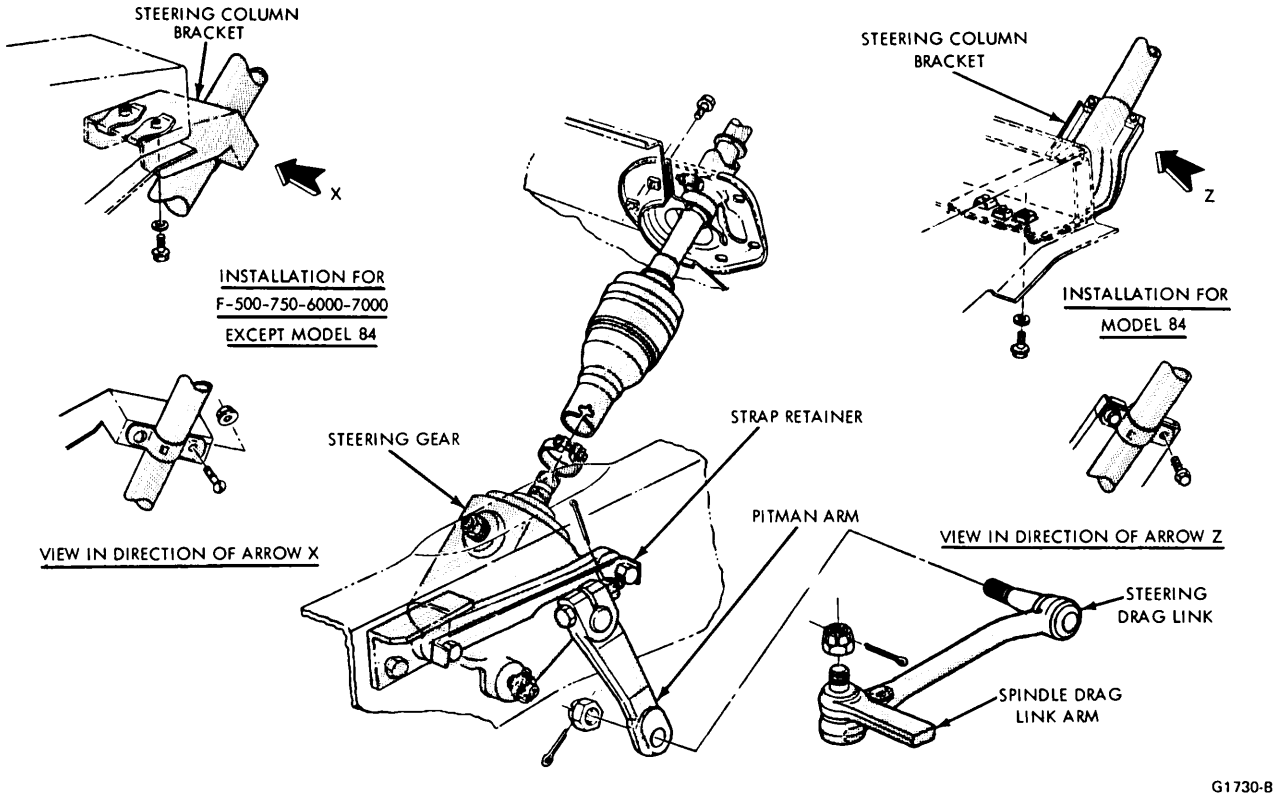

FIG. 6 Steering Gear Installation — F-B-500-750, 6000-7000

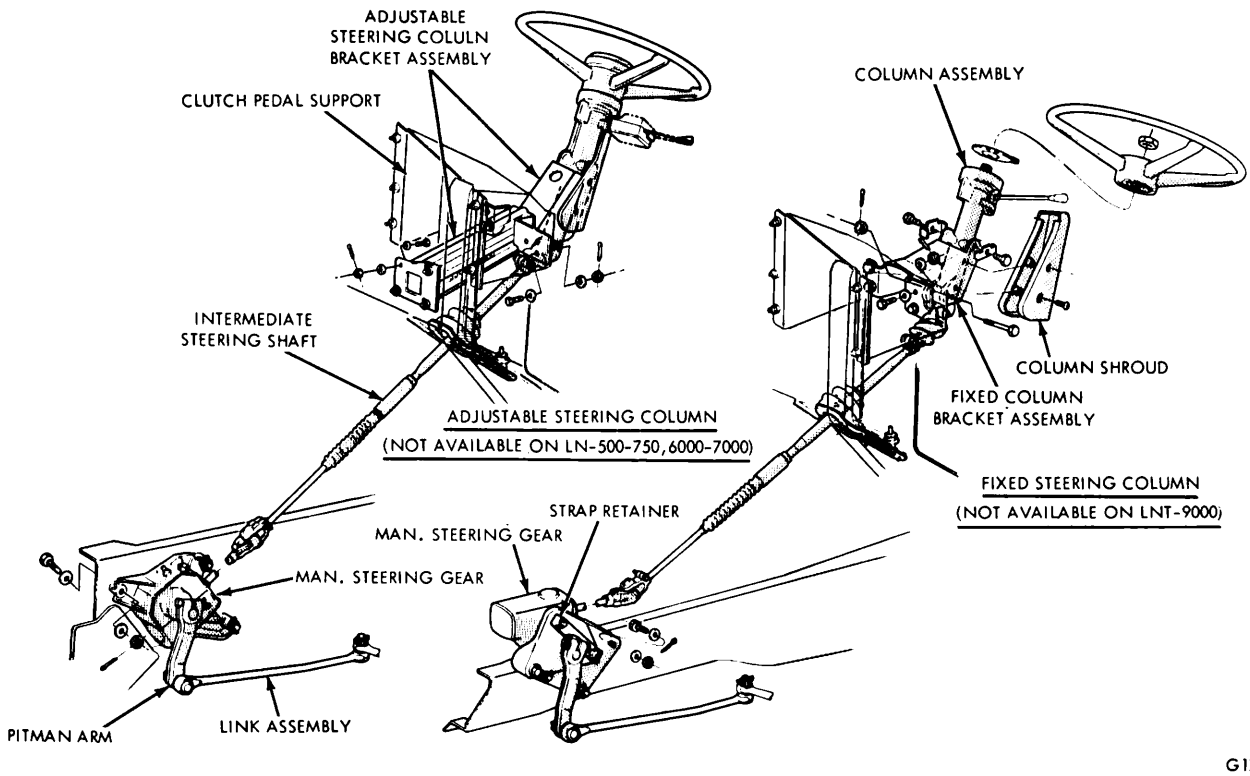

FIG. 7 Manual Steering Installation — L-N-500-900, 6000-9000, L-LT-LTS-LNT-800-900, 8000-9000

sector shaft from the cover.

11. If so equipped and if required, remove the sector shaft bushing or bearing from the cover (Fig. 17).

Assembly

1. If so equipped and if required, install a new bearing in the sector shaft cover (Fig. 18).
2. Install the sector shaft and adjusting screw in the cover, and install the lock nut loose.
3. If required, install a new sector shaft bushing or roller bearings in the sector shaft bushing or roller bearings in the steering gear housing (Fig. 15) with the tool shown in Fig. 11.
4. If required, install the worm shaft upper bearing cup in the housing with the tool shown in Fig. 11.
5. Position the worm shaft upper bearing on the worm, and then install the worm shaft in the housing.
6. Install the worm shaft lower bearing and cup.
7. Install the housing end plate using the same thickness of gaskets as was removed. Install the housing end plate bolts. See Specifications Section at the end of this Part for specified torque.
8. Check the worm bearing preload with an in-lb torque wrench. See worm bearing preload adjustment.
9. Lube and install the worm shaft seal with Tool T54L-6015-A.
10. Install the sector shaft and cover assembly in the housing using a new gasket. Lube and install the sector shaft seal with tool shown in Fig. 11. Lubricate the worm gear. Install sector shaft cover assembly bolts. See Specifications Section at the end of this Part for specified torque.
11. Center the input shaft to locate the high point. Check the worm mesh with an in-lb torque wrench and adjust as required. See the worm and roller mesh adjustment.
12. Remove the filler plug and fill the housing with the specified lubricant.

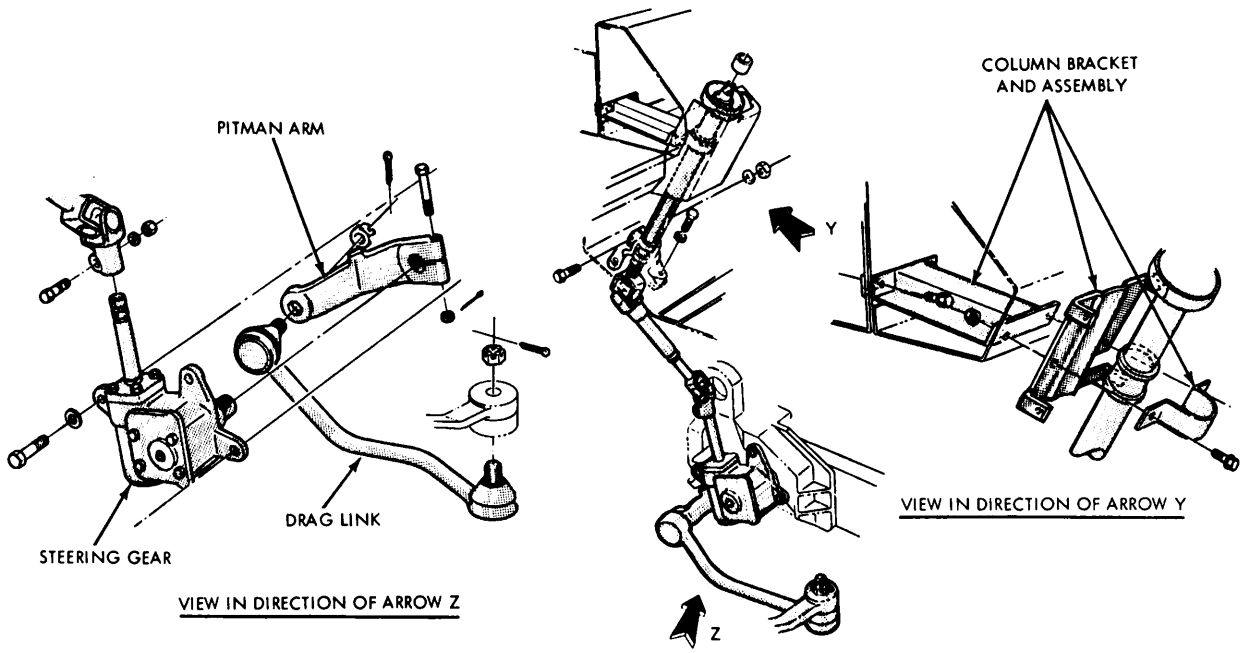

FIG. 8 Manual Steering Installation — W-WT-9000

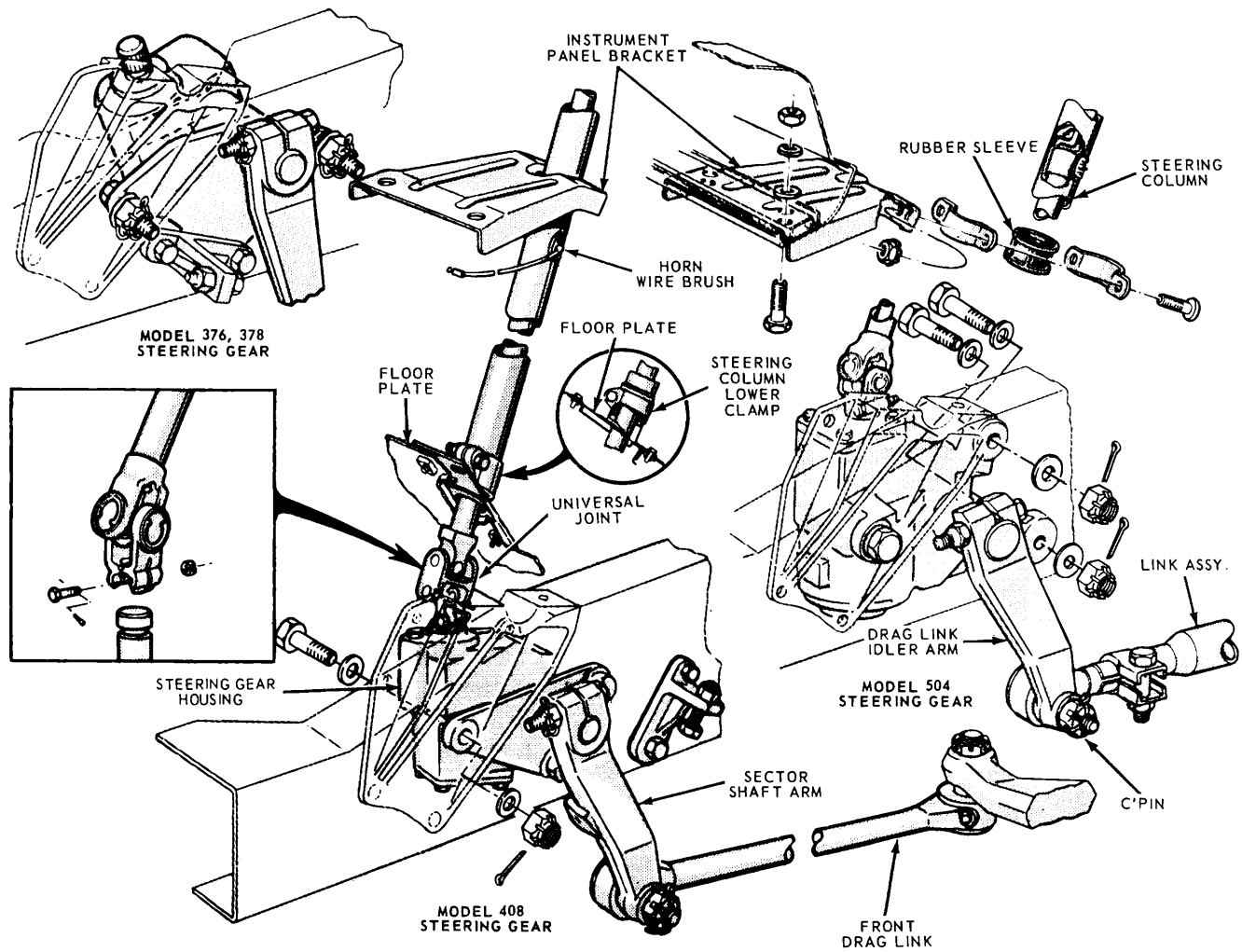

G1568-E

FIG. 9 Manual Steering Installation—C-Series

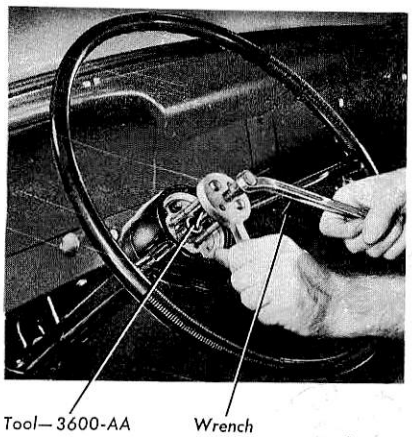

FIG. 10 Removing Steering Wheel — Typical

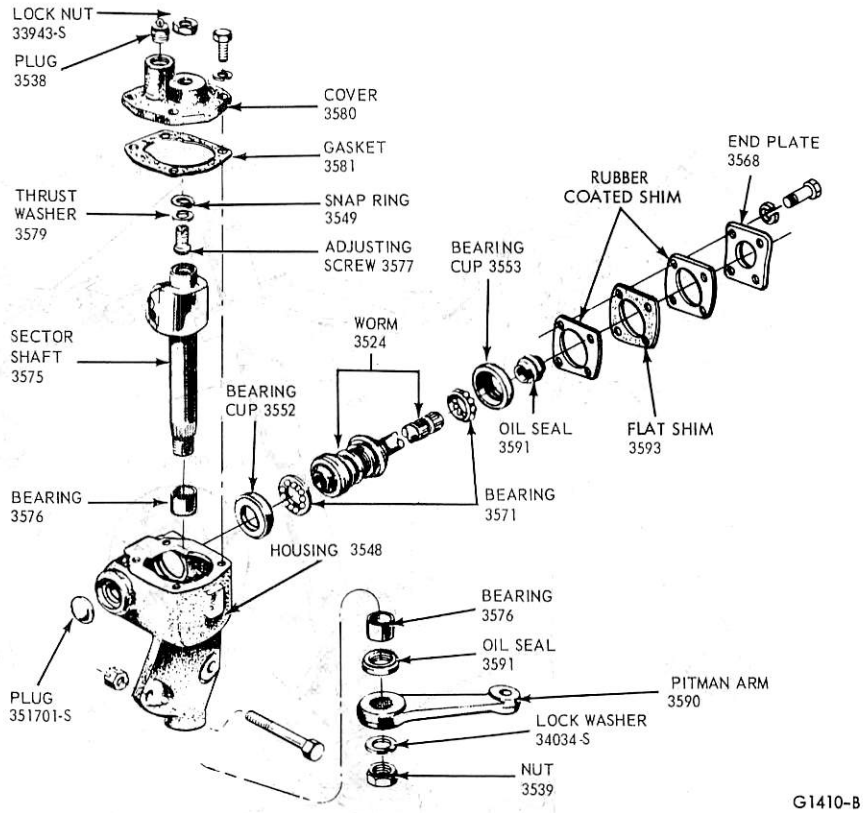

FIG. 12 Steering Gear Disassembled — F-100-250 (4 x 4), Bronco

Operation	Gemmer 254, 301	Gemmer 376, 378	Gemmer 408	Gemmer 504
Output Shaft Diameter (inches)	1-1/4	1-3/8	1-1/2	1-3/4
Remove sector shaft seal	T58L-101-A T59L-100-B	T-57T-3576-A	T58L-101-A T59L-100-B	T60K-7697-B
Install sector shaft seal	Proper Size Socket	77837	T54L-6266-A T53L-200-A	T60K-6700-A T53L-200-A
Remove sector shaft Outer bushing or bearing	T58L3576-A	T57T-3576-A	Proper Size Bushing Remover	T60K-7697-B
Install sector shaft Outer bushing or bearing	T58L-3548-A	T57T-3576-A	Proper Size Bushing Installer	T60K-7697-B
Remove sector shaft Inner bearing or bushing			T58L-101-A T50T-100-A	T58L-101-A T50T-100-A
Install sector shaft			T54L-6015-A T53L-200-A	T54L-6015-A
Remove worm shaft upper seal	T58L-101-A T59L-100-B	T58L-101-A T59L-100-B	T58L-101-A T59L-100-B	T58L-101-A T59L-100-B
Install worm shaft upper seal	T54L-6015-A	T54L-6015-A	T54L-6015-A	T54L-6015-A

CG 1885-B

FIG. 11 Steering Gear Overhaul Tool Application Chart

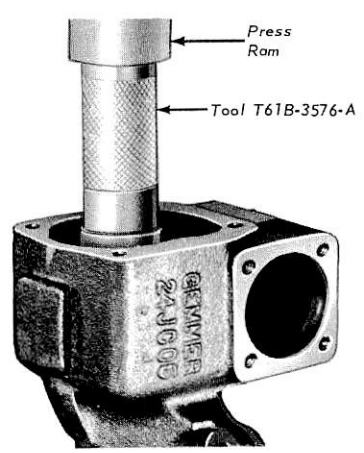

G 1416-A

FIG. 13 Installing Sector Shaft Bushings

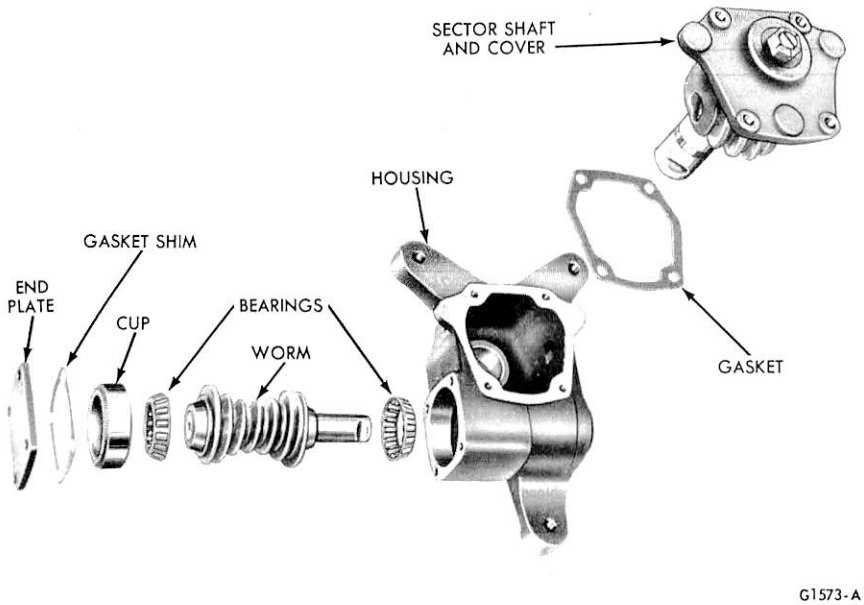

FIG. 14 Typical Steering Gear Disassembled

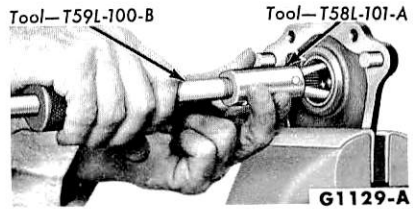

FIG. 17 Removing Sector Shaft Inner Bearing

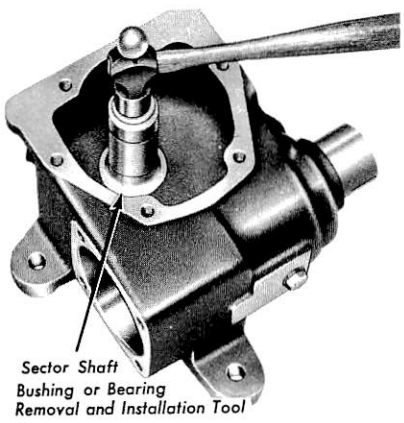

FIG. 15 Removing or Installing Sector Shaft Bushing or Bearing

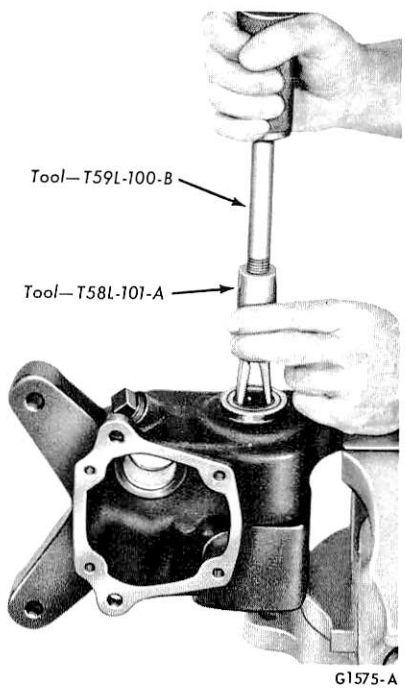

FIG. 16 Removing Upper Seal

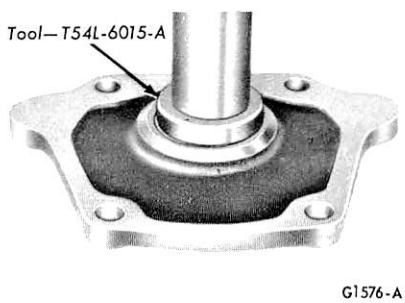

FIG. 18 Installing Sector Shaft Inner Bearing

SPECIFICATIONS

SPECIAL SERVICE TOOLS

Tool No.	Description
T58L-101-A	Puller Attachment
T50T-100-A	Impact Hammer
T62F-3576-A	Sector Shaft Bearing Remover and Replacer
T64K-3576-B	Sector Shaft Needle Bearings and Seal Remover and Replacer Adaptor
T61B-3576-A	Sector Shaft Bushing Remover
T64P-3590-F	Steering Arm Remover
T67L-3600-A	Steering Wheel Remover
T58L-3548-A	Sector Shaft Bearing Replacer
T54L-6015-A	Worm Shaft Upper Seal Installer
T53L-200-A	Handle Adapter
T60K-6700-A	Bushing Replacer

GEMMER – TORQUE LIMITS

Gear Model	Worm Cover Bolts or Nuts Ft-Lb	Sector Shaft Cover Bolts Ft-Lb	Sector Adjust Screw Locknut Ft-Lb
254 ①	18-22	30-35	16-20
301	18-22	18-22	16-20
376, 378	18-22	30-35	16-20
408	24-35	45-55	16-20
504	45-55	45-55	20-25

① F-100 4-Wheel Drive and Bronco Only.

GEMMER ADJUSTMENTS

Gear Model	Output Shaft Diameter (In)	Meshload In-Lb	Worm Preload In-Lb
254 ①	1 1/4	12–21	5–10
301	1 1/4	13 1/2–27	4 1/2–10
376, 378 ②	1 3/8	15–29	6–11
408 ②	1 1/2	24–34	9–14
504 ②	1 3/4	24–34	9–16

① F-100 4-Wheel Drive and Bronco Only.

② When operating at sustained extreme low ambient temperatures, adjust the center mesh preload to 2-5 in-lb above the minimum specified worm preload. Perform this adjustment at 50–75 degree temperature

CG1887-C

PART 13-41 Integral Power Steering Gear-Ford

Applies To F-100, 250, 350 (4 x 2) Vehicles Only

COMPONENT INDEX	Page	COMPONENT INDEX	Page
POWER STEERING GEAR		SPECIFICATIONS	41-09
Adjustments	41-02		
Cleaning and Inspection (See Part 13-01)		VALVE CENTERING SHIM Removal and Installation	41-03
Description	41-01		
Disassembly and Assembly	41-04		
Overhaul	41-05	VALVE SPOOL CENTERING CHECK	41-02
Removal and Installation	41-03		

DESCRIPTION

STEERING GEAR

This integral power steering unit (Fig. 1) is a torsion-bar type of hydraulic assisted system. The system furnishes power to reduce the amount of turning effort required at the steering wheel. It also reduces road shock and vibrations.

The torsion bar power steering unit includes a worm and one-piece rack piston, which is meshed to the gear teeth on the steering sector shaft. The unit also includes a hydraulic valve, valve actuator, input shaft and torsion bar assembly which are mounted on the end of the worm shaft and operated by the twisting action of the torsion bar.

The torsion-bar type of power steering gear is designed with the one piece rack-piston, worm and sector shaft in one housing and the valve spool in an attaching housing (Fig. 1). This makes possible internal fluid passages between the valve and cylinder, thus eliminating all external lines and hoses, except the pressure and return hoses between the pump and gear assembly.

The power cylinder is an integral part of the gear housing. The piston is double acting, in that fluid pressure may be applied to either side of the piston.

A selective metal shim, located in the valve housing of the gear is for the purpose of tailoring steering gear efforts. If efforts are not within specifications they can be changed by increasing or decreasing shim thicknesses as follows:

Efforts heavy to the left-Increase shim thickness.

Efforts light to the left-Decrease shim thickness.

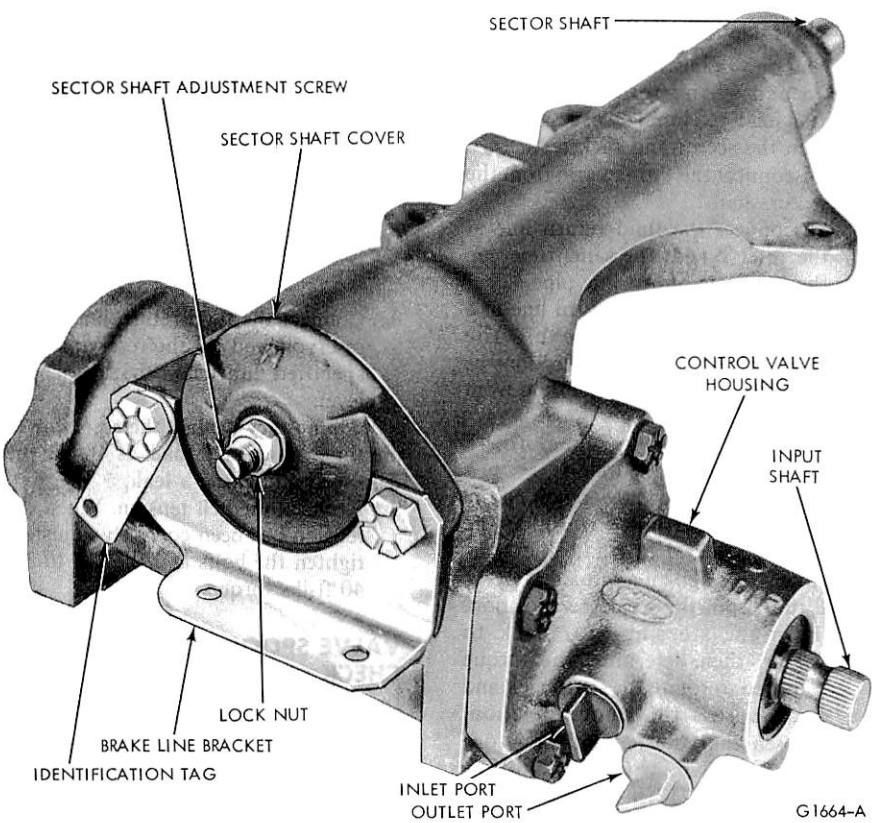

FIG. 1 Ford Integral Power Steering Gear

A change of one shim size will increase or decrease steering efforts approximately 2 in-lb.

As an example, the effort readings on a vehicle might be 17 in-lb to the left and 10 in-lb to the right: a difference of 7 in-lb. As stated previously, increasing one shim size will change the efforts 2 in-lb in **each** direction. Therefore, by changing to one size larger shim, the new gear efforts would be 15 in-lb left and 12 in-lb right. A two sizes larger shim would provide 13 in-lb left and 14 in-lb right. Either shim change would

bring the gear within the 4 in-lb maximum allowable difference. Ideally, the efforts should be exactly the same in each direction but this is not always possible. It is better though to have the effort slightly heavier to the right rather than to the left. In this example, increasing the shim two sizes would be the more satisfactory adjustment.

Shims are available in the following thicknesses and are notched on the outside diameter for identification:

0.0057-0.0063 inch 0 notch
0.0077-0.0083 inch 1 notch
0.0097-0.0103 inch 2 notches
0.0117-0.0123 inch 3 notches
0.0137-0.0143 inch 4 notches

A service identification tag is affixed to the gear assembly. It is located under the upper cover-to-housing bolt.

ADJUSTMENTS

MESH LOAD

During the vehicle breaking-in period, it is probable that some of the factory adjustments will change. These changes in adjustment do not necessarily affect the satisfactory operation of the steering gear assembly, and therefore ordinarily do not require readjustment unless there is excessive lash or other malfunctioning.

ADJUSTMENT IN VEHICLE

The only adjustment which can be performed is the total over center position load, to eliminate excessive lash between the sector and rack teeth.

1. Disconnect the Pitman arm from the sector shaft.
2. Disconnect the fluid return line at the reservoir, at the same time cap the reservoir return line pipe.
3. Place the end of the return line in a clean container and cycle the steering wheel in both directions as required, to discharge the fluid from the gear.
4. Turn the steering wheel to 45 degrees from the left stop.
5. Using an in-lb torque wrench on the steering wheel nut, determine the torque required to rotate the shaft slowly through an approximately 1/8 turn from the 45 degree position.
6. Turn the steering gear back to center, then determine the torque required to rotate the shaft back and forth across the center position. Loosen the adjuster nut, and turn the adjuster screw (Fig. 2) until the reading is 11-12 in-lb greater than the torque 45 degrees from the stop. Tighten the lock nut while holding the screw in place.
7. Recheck the readings and replace the Pitman arm and the steering wheel hub cover.

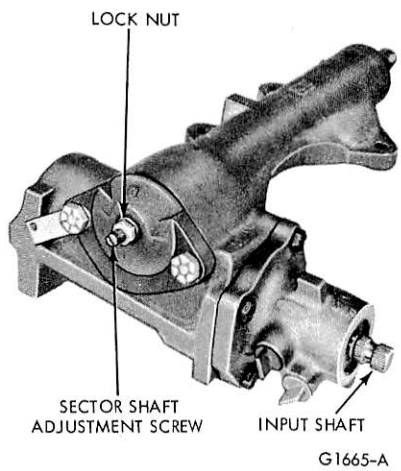

FIG. 2 Adjusting Mesh Load

8. Connect the fluid return line to the reservoir and fill the reservoir with specified lubricant to the proper level.

Do not pry against the reservoir to obtain proper belt load as it can be deformed and cause a leak.

9. Recheck the belt tension. When the tension has been correctly adjusted, tighten the bolts and the nut to 30-40 ft-lbs torque.

VALVE SPOOL CENTERING CHECK

1. Install a 0-2000 psi pressure gauge Tool T56L-33610-D in the pressure line between the power steering pump outlet port and the integral steering gear inlet port.
2. **Make sure that the valve on the gauge is in the fully open position.**
3. Check the fluid level in the reservoir and fill it to proper level with the specified fluid.
4. Start the engine and cycle the steering wheel from stop-to-stop, to bring the steering lubricant up to normal operating temperature. Stop the engine and recheck the reservoir. Add fluid if necessary.
5. With the engine running at approximately 1000 rpm and the steering wheel centered, attach an in-lb torque wrench to the steering wheel retaining nut. Apply sufficient torque to the torque wrench in each direction, either side of center, to get a gauge reading of 250 psi.
6. The torque reading should be the same in both directions when 250 psi is reached. If the difference between the readings exceeds 4 in-lbs, the steering gear must be removed and the valve centering shim removed from the valve housing and a thicker or thinner shim installed. **Two shims may be used but the combined thickness of the selected shims must not exceed .018 inch.** The piston must travel all the way to the stop without restriction or increase in worm turning effort. If two shims must be used to center the spool valve and a restriction or interference condition is experienced when turning the piston to its stop on the valve housing, the shaft and control assembly must be replaced. If the steering effort is heavy to the left, the shim thickness should be increased. Shim thickness should be decreased if the steering effort is light to the left.

The out of vehicle procedure for valve centering check is the same as for the vehicle except the torque and simultaneous pressure reading must be made at the right and left stops instead of either side of center.

REMOVAL AND INSTALLATION

STEERING GEAR

Removal

When performing any service operations on power steering systems which necessitate hose disconnecting, make certain the hoses are tagged prior to removal. It is important that the hoses are reconnected to their correct ports to preclude damage to the system.

1. Disconnect the pressure and the return lines from the steering gear. Plug the lines and the ports in the gear to prevent entry of dirt. The brake lines attached to the bracket on the steering gear must be removed.
2. Remove the two bolts that secure the flex coupling to the steering gear and to the column steering shaft assembly.
3. Raise the vehicle and remove the sector shaft attaching nut.
4. Remove the Pitman arm from the sector shaft with Tool T64P-3590-F. Remove the tool from the Pitman arm. Do not damage the seals.
5. If working on a vehicle equipped with a standard transmission, remove the clutch release lever retracting spring to provide clearance for removing the steering gear.
6. Support the steering gear then remove the three steering gear attaching bolts.
7. After removing the clamp bolt securing the flex coupling to the steering gear, work the steering gear free of the flex coupling and remove it from the vehicle.
8. If the flex coupling stayed on the input shaft, lift it off the shaft at this time.

Installation

1. Slide the flex coupling into place on the steering shaft assembly. Turn the steering wheel so that the spokes are in the horizontal position.
2. Center the steering gear input shaft.
3. Slide the steering gear input shaft into the flex coupling and into place on the frame side rail. Install the three attaching bolts and torque them to specification.
4. Make sure that the wheels are in the straight ahead position, then install the Pitman arm on the sector shaft. Install and tighten the sector shaft and install and tighten the attaching bolts to specification.
5. Move the flex coupling into place on the input and steering column shaft and install and tighten the attaching bolts to specification.
6. Connect and tighten the fluid pressure and the return line to the steering gear. Reinstall the brake lines to the bracket on the steering gear.
7. Remove the coil wire. Fill the power steering pump reservoir and, while engaging the starter, cycle the steering wheel to distribute the fluid. Check the fluid lever and add as required. Install the coil wire, start the engine and cycle the steering wheel. Check for fluid leaks.

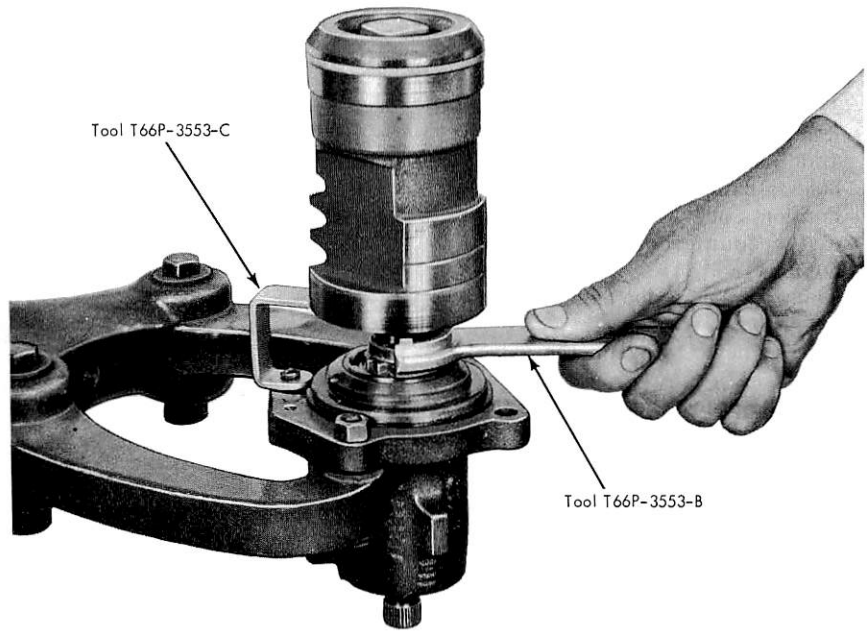

FIG. 3 Removing Worm Bearing Race Nut

VALVE CENTERING SHIM

Removal and Installation

1. Hold the steering gear over a drain pan in an inverted position and cycle the input shaft several times to drain the remaining fluid from the gear.
2. Mount the gear in a soft-jawed vise.
3. Turn the input shaft to either stop then, turn it back approximately 1 3/4 turns to center the gear.
4. Remove the two sector shaft cover attaching screws, the brake line bracket and the identification tag.
5. Tap the lower end of the sector shaft with a soft-faced hammer to loosen it, then lift the cover and shaft from the housing as an assembly. Discard the O-ring.
6. Remove the four valve housing attaching bolts. Lift the valve housing from the steering gear housing while holding the piston to prevent it from rotating off the worm shaft.
7. Remove the valve housing and the lube passage O-rings and discard them.
8. Place the valve housing, worm and piston assembly in the bench mounted holding fixture Tool T57L-500-A with the piston on the top.
9. Rotate the piston upward (back off) 3 1/2 turns.
10. Insert Tool T66P-3553-C (with the arm facing away from the piston) into a bolt hole in the valve housing. Rotate the arm into position under the piston (Fig. 3).
11. Loosen the Allen head race nut set screw from the valve housing.
12. Using Tool T66P-3553-B, loosen the worm bearing race nut.
13. Lift the piston-worm assembly from the valve housing. **During removal hold the piston to prevent it from spinning off at the shaft.**
14. Change the power steering valve centering shim.
15. Install the piston-worm assembly into the valve housing. **Hold the**

piston worm to prevent it from spinning off of the shaft.

16. Install the worm bearing race nut and torque to specification using Tool T66P-3553-B (Fig. 4).
17. Install the race nut set screw (Allen head) through the valve housing.
18. Rotate the piston upward (back off) 1/2 turn and remove Tool T66P-3553-C.
19. Remove the valve housing, worm, and piston assembly from the holding fixture.
20. Position a new lube passage O-ring in the counterbore of the gear housing.
21. Apply vaseline to the teflon seal on the piston.
22. Place a new O-ring on the valve housing.
23. Slide the piston and valve into the gear housing being careful not to damage the teflon seal.
24. Align the lube passage in the valve housing with the one in the gear housing, and install but do not tighten the attaching bolts.
25. Rotate the ball nut so that the teeth are in the same place as the sector teeth. Tighten the four valve housing attaching bolts to specification.
26. Position the sector shaft cover O-ring in the steering gear housing. Turn the input shaft as required to center the piston.
27. Apply vaseline to the sector shaft journal; then, position the sector shaft and cover assembly in the gear housing. Install the brake line bracket, steering gear identification tag and the two sector shaft cover attaching studs.
28. Position an in-lb torque wrench on the gear input shaft and adjust the meshload to approximately 4 in-lbs. Then, torque the sector shaft cover attaching studs to specification at the end of this Part.
29. After the cover attaching bolts have been tightened to specification, adjust the meshload to specification with an in-lb torque wrench.

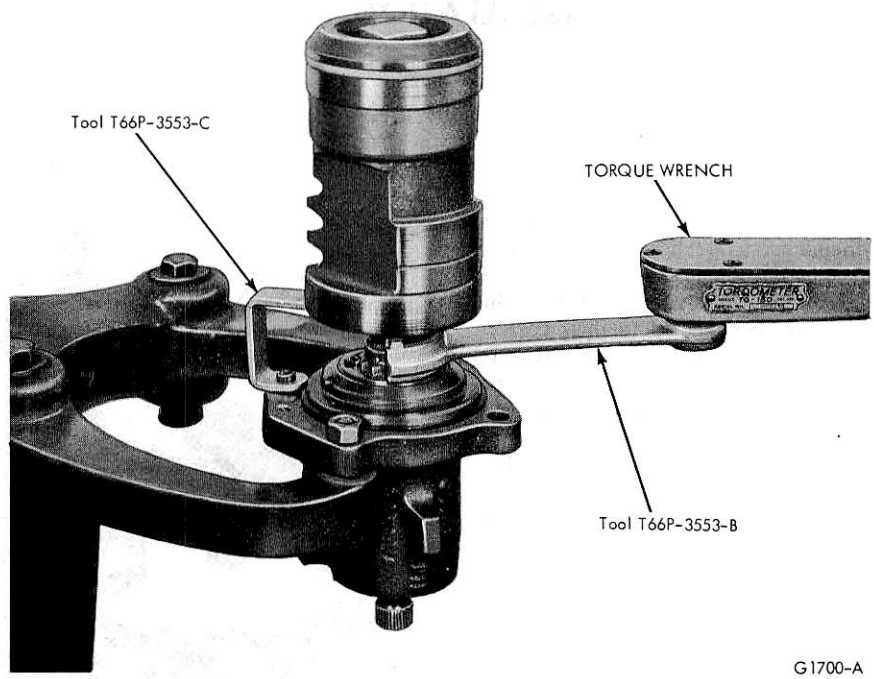

FIG. 4 Installing Worm Bearing Race Nut

DISASSEMBLY AND ASSEMBLY

In most cases, complete disassembly of the power steering gear will not be necessary. It is suggested that only those assemblies that are faulty be disassembled. Disassembly and reassembly of the unit and the subassemblies mustbe made on a clean workbench. As in repairing any hydraulically operated unit, cleanliness is of utmost importance. Therefore, the bench tools and parts must be kept clean at all times. Thoroughly clean the exterior of the unit with a suitable solvent and, when necessary, drain as much of the hydraulic oil as possible. Handle all parts very carefully to avoid nicks, burrs, scratches and dirt, which could make the parts unfit for use. Do not clean, wash or soak seals in cleaning solvent.

STEERING GEAR

Disassembly

1. Hold the steering gear over a drain pan in an inverted position and cycle the input shaft several times to drain the remaining fluid from the gear.
2. Mount the gear in a soft-jawed vise.
3. Remove the lock nut from the adjusting screw.
4. Turn the input shaft to either stop then, turn it back approximately 1 3/4 turns to center the gear.
5. Remove the two sector shaft cover attaching studs, the brake line bracket and the identification tag.
6. Tap the lower end of the sector shaft with a soft-hammer to loosen it, then lift the cover and shaft from the housing as an assembly. Discard the O-ring.
7. Turn the sector shaft cover counterclockwise off the adjuster screw.
8. Remove the four valve housing attaching bolts. Lift the valve housing from the steering gear housing while holding the piston to prevent it from rotating off the worm shaft. Remove the valve housing and the control valve gasket. Discard the gasket.
9. Stand the valve body and piston on end with the piston end down. Rotate the input shaft counterclockwise out of the piston allowing the ball bearings to drop into the piston.
10. Place a cloth over the open end of

the piston and turn it upside down to remove the balls.
11. Remove the two screws that attach the ball guide clamp (Fig. 5) to the ball nut and remove the clamp and the guides.
12. Install the valve body assembly in the holding fixture (do not clamp in a vise) and loosen the race nut screw (Allen head) from the valve housing and remove the worm bearing race nut as shown in Fig. 3.
13. Carefully slide the input shaft, worm and valve assembly out of the valve housing. Due to the close diametrical clearance between the spool and housing, the slightest cocking of the spool may cause it to jam in the housing.
14. Remove the shim from the valve housing bore.

Assembly

Do not clean, wash, or soak seals in cleaning solvent.

1. Mount the valve housing in the holding fixture with the flanged end up.
2. Place the required thickness valve spool centering shim (Fig. 5) in the housing.
3. Carefully install the worm and valve in the housing.
4. Install the race nut in the housing and torque it to specification at the end of this Part.
5. Install the race nut set screw (Allen head) through the valve housing and torque to specification at the end of this Part.
6. Place the piston on the bench with the ball guide holes facing up. Insert the worm shaft into the piston so that the first groove is in alignment with the hole nearest to the center of the piston (Fig. 6).
7. Place the ball guide in the piston. Place the 27 to 29 balls, depending on the piston design, in the ball guide (Fig. 6) turning the worm in a clockwise direction as viewed from the input end of the shaft. If all of the balls have not been fed into the guide upon reaching the right stop, rotate the input shaft in one direction and then in the other while installing the balls. After the balls have been installed, do not rotate the input shaft or the piston more than 3 1/2 turns off the right stop to prevent the balls from falling out of the circuit.
8. Secure the guides in the ball nut with the clamp (Fig. 6).
9. Apply vaseline to the teflon seal on the piston.
10. Place a new control valve gasket on the valve housing.
11. Slide the piston and valve into the gear housing being careful not to damage the teflon seal.
12. Align the lube passage in the valve housing with the one in the gear housing, and install but do not tighten the attaching bolts.
13. Rotate the ball nut so that the teeth are in the same plane as the sector teeth. Tighten the four valve housing attaching bolts to specifications.
14. Position the sector shaft cover O-ring in the steering gear housing. Turn the input shaft as required to center the piston.
15. Apply vaseline to the sector shaft journal then position the sector shaft and cover assembly in the gear housing. Install the brake line bracket, the steering identification tag and two sector shaft cover attaching bolts. Torque the bolts to specifications.
16. Attach an in-lb torque wrench to the input shaft. Adjust the mesh load to specifications as shown in Fig. 2.

STEERING GEAR HOUSING

Disassembly and Assembly

1. Remove the snap ring and the spacer washer (Fig. 7) from the lower end of the steering gear housing.
2. Remove the lower seal from the housing as shown in Fig. 8. Lift the spacer washer from the housing.
3. Remove the upper seal in the same manner as the lower seal. Some housings require only one seal and one spacer.
4. Dip both sector shaft seals in gear lubricant.
5. Apply lubricant to the sector shaft seal bore of the housing and position the sector shaft inner seal into the housing with the lip facing inward. Press the seal into place with the tool shown in Fig. 9. Place a spacer washer (0.090 inch) on top of the seal and apply more lubricant to the housing bore.
6. Place the outer seal in the housing with the lip facing inward and press it into place as shown in Fig. 10. Then, place a 0.090 inch spacer washer on top of the seal.
7. Position the snap ring in the housing. Press the snap ring into the housing to properly locate the seals and engage the snap ring in the groove.

VALVE HOUSING

Disassembly and Assembly

1. Remove the dust seal (Fig. 11) from the rear of the valve housing with Tools T59L-100-B and T58L-101-A and discard the seal.
2. Remove the snap ring from the valve housing.
3. Turn the fixture to place the valve housing in an inverted position.
4. Insert special tool in the valve body assembly opposite the seal end and gently tap the bearing and seal out of the housing as shown in Fig. 12. Discard the seal. **Caution must be exercised when inserting and removing the tool to prevent damage to the valve bore in the housing.**
5. Remove the fluid inlet and outlet tube seats with an EZ-out if they are damaged.
6. Coat the fluid inlet and outlet tube seats with vaseline and position them in the housing. Install and tighten the tube nuts to press the seats to the proper location.
7. Coat the bearing and seal surface of the housing with a film of vaseline.
8. Position the bearing in the valve housing. Seat the bearing in the valve housing with the tool shown in Fig. 13. Make sure that the bearing is free to rotate.
9. Dip the new oil seal in gear lubricant; then, place it in the housing with the metal side of the seal facing outward. Drive the seal into the housing until the outer edge of seal does not quite clear the snap ring groove (Fig. 14).
10. Place the snap ring in the housing; then, drive on the ring with the tool shown in Fig. 14 until the snap ring seats in its groove to properly locate the seal.
11. Place the dust seal in the housing with the dished side **(rubber side) facing out.** Drive the dust seal into place with the tool shown in Fig. 14. The seal must be located behing the undercut in the input shaft when it is installed.

WORM AND VALVE

Disassemlby and Assembly

1. Remove the snap ring and actuator spring from the end of the actuator.
2. Slide the control valve spool (Fig. 5) off the actuator.
3. Install the valve spool evenly and slowly with a slight oscillating motion into the flanged end of valve housing with the valve identification groove between the valve spool lands outward, checking for freedom of valve movement within the housing working area. The valve spool should enter the housing bore freely and fall by its own weight.
4. If the valve spool is not free, check

for burrs at the outward edges of the working lands in the housing and remove with a hard stone.
5. Check the valve for burrs and if burrs are found, stone the valve in a **radial direction only.** Check for freedom of the valve again.
6. Remove the valve spool from the housing.
7. Slide the spool onto the actuator making sure that the groove in the spool annulus is toward the worm.
8. Install the actuator spring and the snap ring to retain the spool. The actuator spring convex side (color coded) must be toward the snap ring. The beveled ID of the snap ring must be assembled away from the spool.

PISTON AND BALL NUT

Disassembly and Assembly

1. Remove the teflon ring and the O-ring (Fig. 5) from the piston and ball nut.
2. Dip a new O-ring in gear lubricant and install it on the piston and ball nut.
3. Install a new teflon ring on the piston and ball nut being careful not to stretch it any more than necessary.

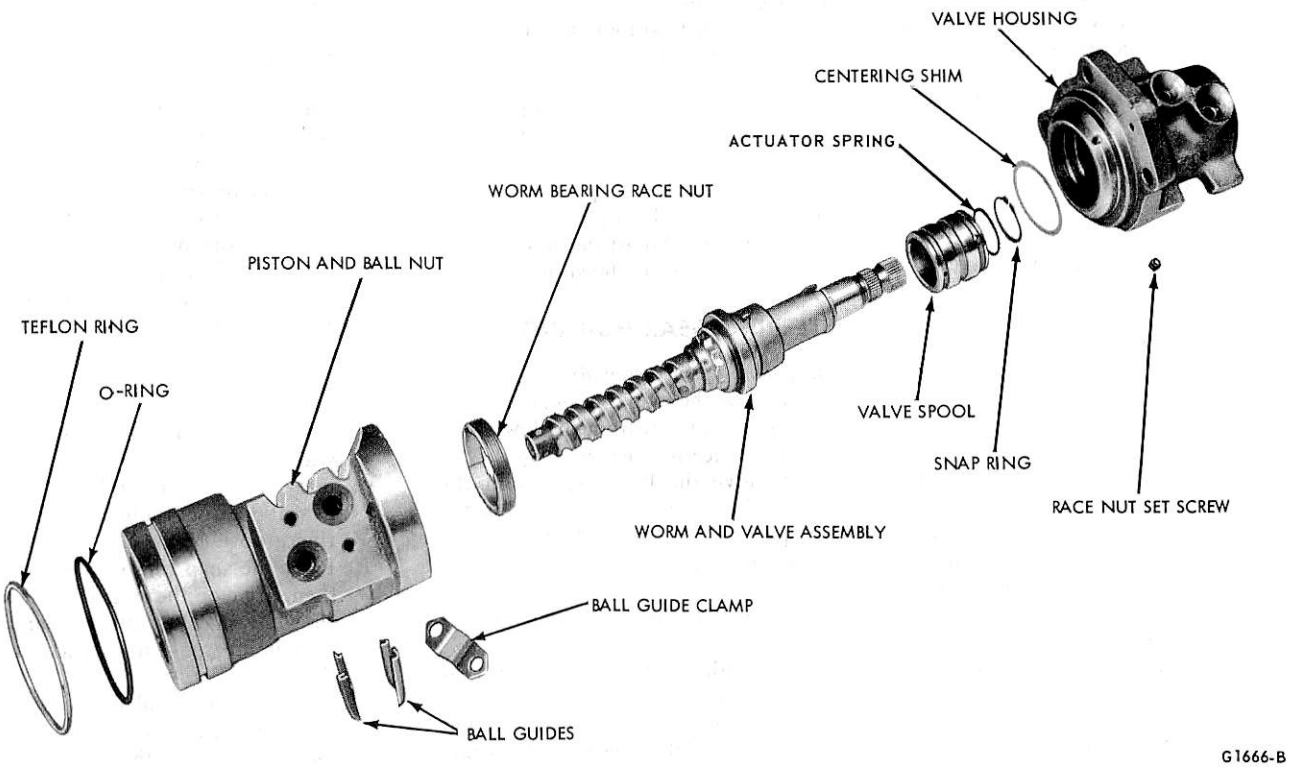

FIG. 5 Ball Nut and Valve Housing Disassembled

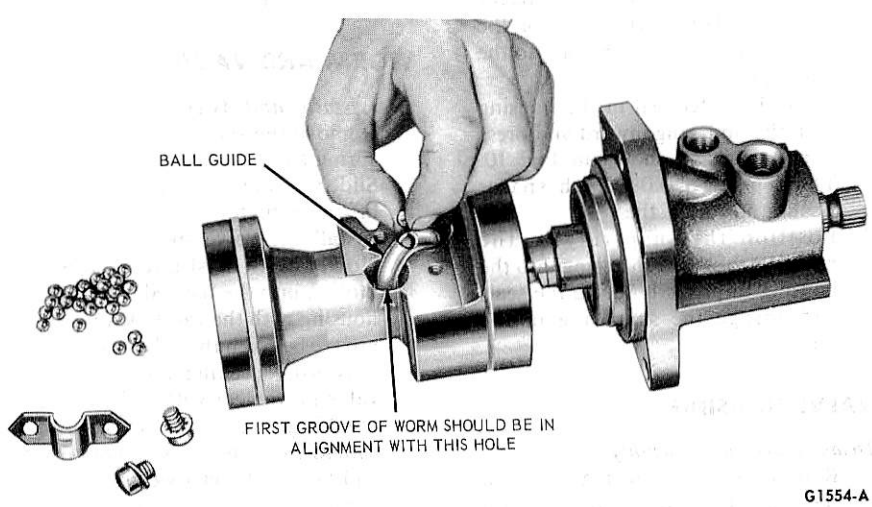

FIG. 6 Assembling Piston on Worm Shaft

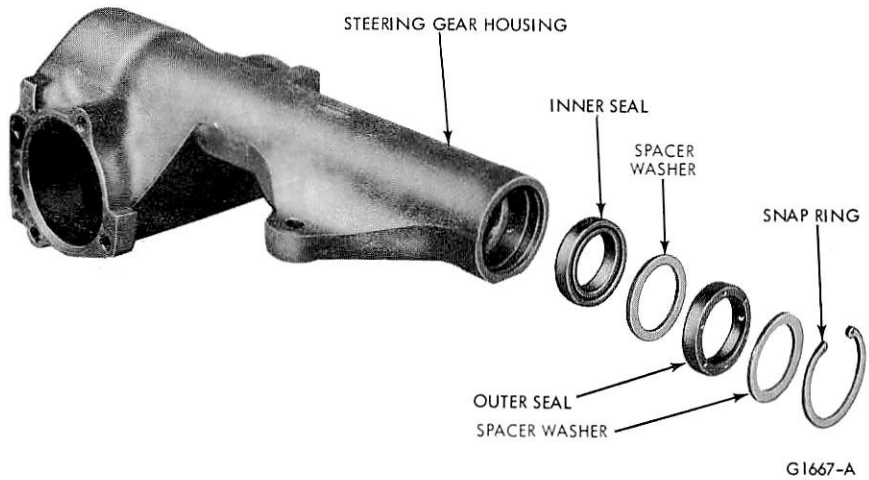

FIG. 7 Steering Gear Housing Disassembled

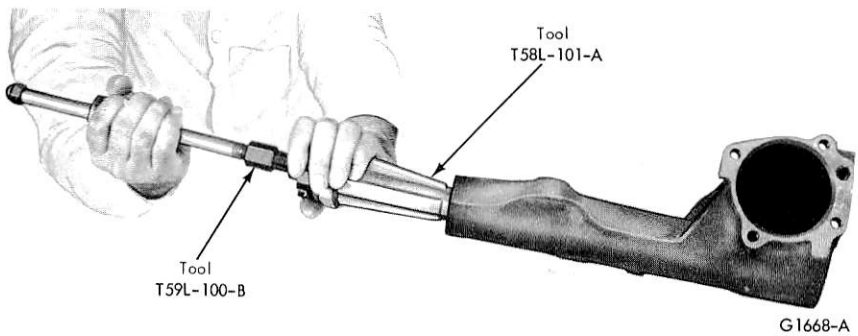

FIG. 8 Removing Upper and Lower Seals



FIG. 9 Installing Sector Shaft Inner Seal

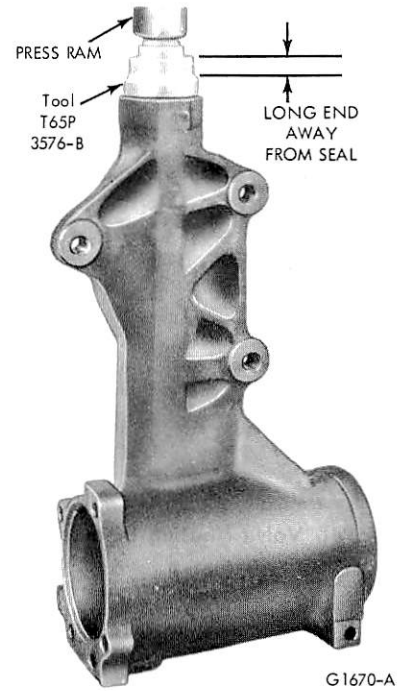

FIG. 10 Installing Sector Shaft Outer Seal

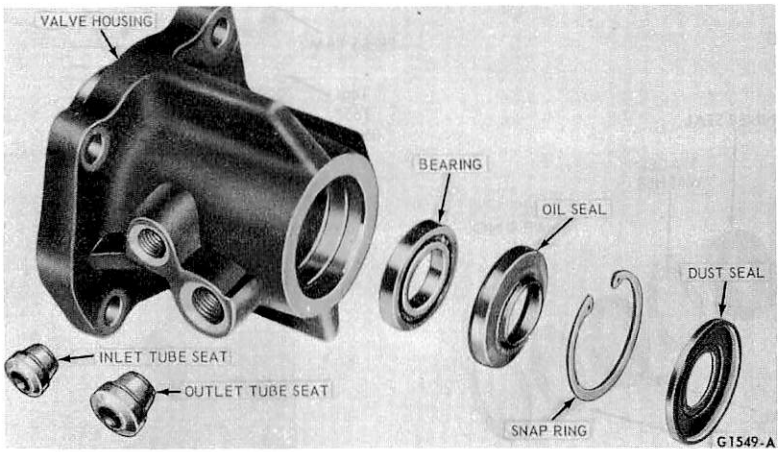

FIG. 11 Valve Housing Disassembled

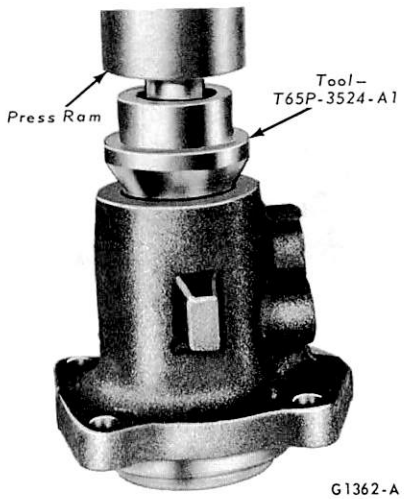

FIG. 14 Installing Oil Seal in Valve Housing

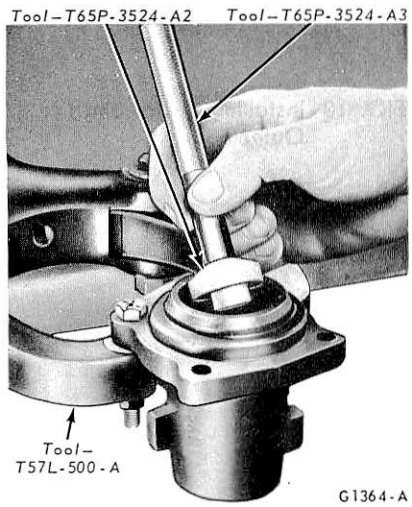

FIG. 12 Removing Bearing and Oil Seal

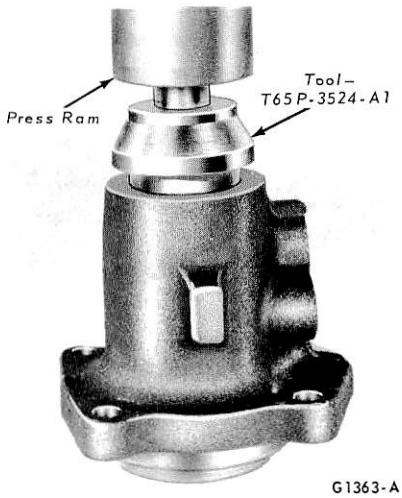

FIG. 13 Installing Valve Housing Bearing

SPECIFICATIONS

FORD INTEGRAL POWER STEERING GEAR SPECIFICATIONS

Description	
Type	Recirc. Ball Torsion Bar
Ratio	17:1
Turns of Steering Wheel (Lock to Lock—Linkage Disconnected)	4
Fluid Capacity (Included in Pump Reservoir Fill)	1.6 Pints (Approx.)
Fluid Specification	D2AZ-19582-A
Worm Bearing Preload	2-8 In-Lb
Total Meshload Over Mechanical Center	17 In-Lb (Max.)
Total Meshload Over Worm Bearing Preload	9-13 In-Lb

FORD INTEGRAL POWER STEERING GEAR TORQUE LIMITS (FT-LBS)

Description	Torque
Sector Shaft Cover Bolts	55-70
Mesh Load Adjusting Screw Lock Nut	35-45
Ball Return Guide Clamp Screw	42-70 In-Lb
Valve Housing to Gear Housing Screw	35-45
Race Retaining Nut	①
Set Screw-Race Nut	20-25 In-Lb
Piston End Cap	70-110
Pressure Hose to Gear	16-25
Return Hose to Gear	25-34
Hose Clamps	1-2

① Specified Torque - Because the length of the tool required to torque the nut will affect the observed torque reading on the torque wrench, the torque reading should be computed using the length of the torque wrench and the nominal specified torque as follows:

Torque (using tool = Length of Torque Wrench x 60 Ft-Lb
· T66P-3553-B) Length of Torque Wrench + 5.5 Inches

Example: With 13 inch torque wrench

$$\frac{13 \text{ In.} \times 60 \text{ Ft-Lb}}{13 \text{ In.} + 5.5 \text{ In.}} = \frac{13 \times 60 \text{ Ft-Lb}}{18.5} = 0.703 \times 60 = 42 \text{ Ft-Lb}$$

SPECIAL SERVICE TOOLS

Tool No.	Description	Tool No.	Description
T56L-33610-D	Pressure Testing Gauge Assembly	T59L-100-B	Slide Hammer-Short
T64P-3590-F	Steering Pitman Arm Remover	T58L-101-A	Puller Attachment
T57L-500-A	Bench Mounted Holding Fixture	T65P-3524-A1, A2, A3	Bearing Remover and Installer
T66P-3553-C	Spacer	T65P-3576-B	Sector Shaft Seal Installer
T66P-3553-B	Spanner Wrench		

CG1843-C

PART 13-42 Integral Power Steering Gear-Saginaw

Applies Only to Bronco

COMPONENT INDEX	Page	COMPONENT INDEX	Page
ADJUSTER PLUG		STEERING GEAR – Contd.	
Disassembly and Assembly	42-06	Disassembly	42-03
MESH LOAD ADJUSTMENT	42-01	Removal and Installation	42-02
RACK – PISTON		STEERING GEAR HOUSING	
Disassembly and Assembly	42-07	Disassembly and Assembly	42-05
SPECIFICATIONS	42-11	STUB SHAFT AND ROTARY	
STEERING GEAR		VALVE ASSEMBLY	
Assembly	42-04	Disassembly and Assembly	42-06
Description	42-01		

DESCRIPTION

STEERING GEAR

The Rotary Valve Safety power steering gear operates entirely on displacing fluid to provide hydraulic fluid pressure assists only when turning. As the entire gear assembly is always full of fluid, all internal components of the gear are immersed in fluid making periodic lubrication unnecessary. In addition, this fluid acts as a cushion to absorb road shocks that may be transmitted to the driver. All fluid passages are internal except the pressure and return hoses between the gear and pump.

The rotary valve provides a smooth transmission through the driving range of steering wheel effort. A torsion bar transmits the road feel to the driver. Response of the steering gear to effort applied to the steering wheel has been greatly increased.

The rack-piston nut is one piece and is geared to the sector shaft. Lash between the sector shaft and rack-piston nut is maintained by an adjusting screw which is retained in the end of the shaft gear (Fig. 1).

ADJUSTMENTS

During the breaking in period of the vehicle, it is probable that some of the factory adjustments will change. These changes in adjustment do not necessarily affect the satisfactory operation of the steering gear assembly and ordinarily do not require re-adjustment unless there is excessive lash or other malfunctioning. The only adjustment that should be performed in the vehicle is the total over center position load (mesh load) to eliminate excessive lash between the sector shaft and rack teeth.

MESH LOAD

1. Disconnect the Pitman arm from the sector shaft and remove the steering wheel hub.
2. Disconnect the fluid return line at the reservoir; at the same time cap the reservoir return line pipe.
3. Place the end of the return line in a clean container and cycle the steering wheel in both directions as required, to discharge the fluid from the gear.
4. Turn the gear 1/2 turn off center (either direction). Using a 24 in-lb torque wrench on the steering wheel nut, determine the torque required to rotate the shaft slowly through a 20 degree arc.
5. Turn the gear back to center and repeating the method of reading torque as in Step 4, above, loosen the adjuster lock nut, turn the screw inward with a 7/32-inch Allen wrench until the reading is equal to 6 in-lbs in excess of Step 4 above, and retighten the lock nut while holding the screw in place.
6. Recheck the readings and replace the Pitman arm and the steering wheel hub.
7. Connect the fluid return line to the reservoir and fill the reservoir with D2AZ-19580-A fluid to the proper level.

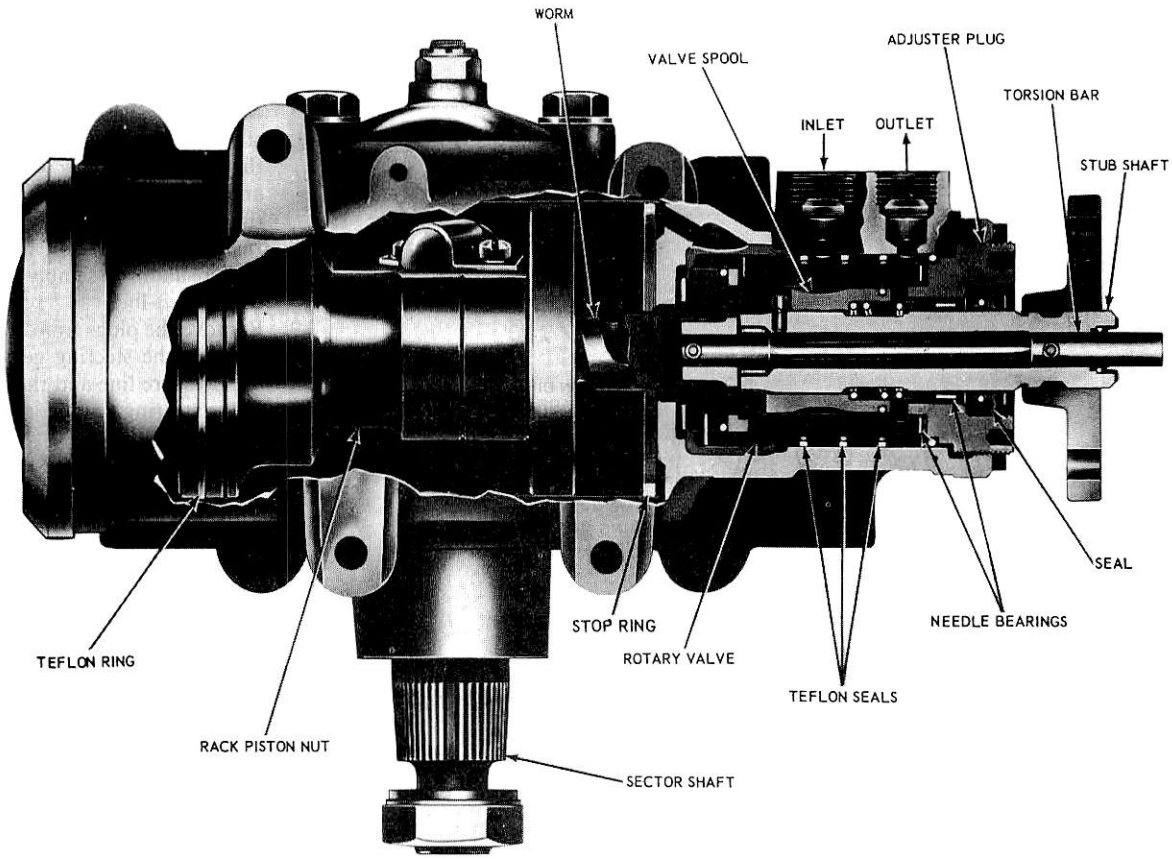

FIG. 1 Power Steering Gear—Sectional View

REMOVAL AND INSTALLATION

STEERING GEAR

Removal

When performing any service operations on power steering systems which necessitate hose disconnecting, make certain the hoses are tagged prior to removal. It is important that the hoses are reconnected to their correct ports to preclude damage to the system.

1. Position a drain pan under the steering gear. Disconnect the pressure and the return lines from the steering gear. Plug the lines and the ports in the gear to prevent entry of dirt.
2. Raise the vehicle on a hoist and remove the pitman arm attaching nut and lock washer.
3. Remove the pitman arm from the sector shaft with Tool T64P-3590-F.
4. Remove the 3 steering gear-to-frame side rail attaching bolt nuts and lower the vehicle.
5. Remove the pinch bolt from the flange and insulator assembly.
6. Loosen the nut retaining the horn and pivot the horn outboard.
7. Remove the 3 steering gear attaching bolts and remove the steering gear and shaft and joint assemblies as a unit.
8. Remove the pinch bolt and nut from the shaft and joint assembly (Fig. 2).
9. Remove the shaft and joint assembly from the steering gear.

Installation

1. Attach the shaft and joint assembly to the steering gear. Install the pinch bolt and torque the nut to 45-60 ft-lb. This operation should be

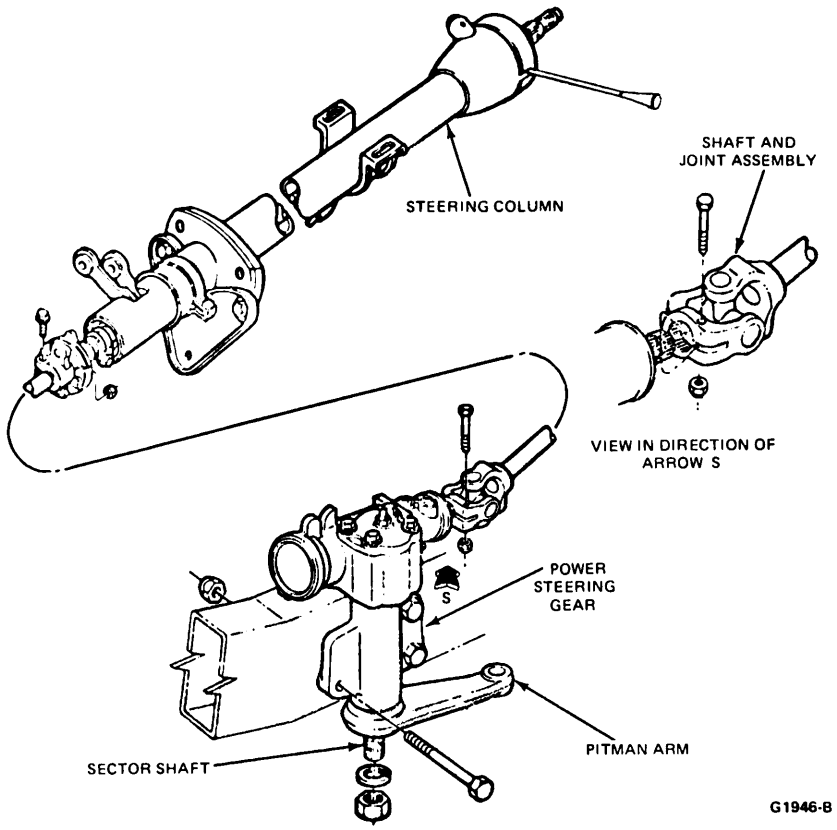

FIG. 2 Power Steering Gear Installation—Bronco

performed prior to gear installation.
2. Place the vehicle on a hoist. POsition the steering gear to the frame side rail and attach the one forward attaching bolt and nut loosely.
3. Center the steering gear input shaft.
4. Position the shaft of the shaft and joint assembly into the flange and insulator assembly while supporting the rear of the steering gear.
5. Position the remaining two steering gear attaching bolts through the steering gear flange and through the frame side rail.
6. Attach the two remaining steering gear attaching nuts and torque all three attaching nuts to 52-90 ft-lb.
7. Make sure the wheels are in a straight ahead position and install the pitman arm, lock washer and nut and torque to 170-230 ft-lb. Lower the vehicle.
8. Install the pinch bolt to the flange and insulator assembly and torque to 28-35 ft-lb.
9. Remove the plugs from the lines and ports of the steering gear. Connect the pressure line and the return line to the steering gear. Torque to 16-25 ft-lb.
10. Pivot the horn inboard and tighten the retaining nut. Remove the coil wire. Fill the power steering pump reservoir and while engaging the starter, cycle the steering wheel to distribute the fluid. Check the fluid level and add as required. Install the coil wire, start the engine and cycle the steering wheel. Check for fluid leaks.

DISASSEMBLY AND ASSEMBLY

Disassembly and reassembly of the unit and the subassemblies must be made on a clean workbench. As in repairing any hydraulically operated unit, cleanliness is of utmost importance. Therefore, the bench, tools, and parts must be kept clean at all times. Thoroughly clean the exterior of the gear with a suitable solvent and, when necessary, drain as much of the hydraulic fluid from the gear as possible. Do not clean, wash or soak seals in cleaning solvent.

STEERING GEAR

Disassembly

1. Mount the steering gear in a vise (Fig. 3).
2. Rotate the end plug retaining ring to place one end of the ring opposite the hole in the housing.
3. Working through the hole in the housing (Fig. 4), unseat the retaining ring then work it out of the groove with a screwdriver.
4. Rotate the input shaft in a counterclockwise direction using a 3/4 inch, 12-point socket wrench to force the end plug out of the housing. Do not rotate the shaft any more than necessary to remove the plug. Further rotation will allow the balls to fall from their circuit and allow the rack-piston to become disengaged from the sector shaft. Remove the O-ring from the housing and discard it.
5. Rotate the input shaft 1/2 turn in a clockwise direction to draw the piston inward.
6. Turn the end plug (Fig. 5) counterclockwise out of the piston with a 1/2-inch drive extension.
7. Remove the lock nut from the sector shaft adjustment screw. Discard the nut.
8. Remove the four cover attaching screws. Rotate the sector shaft adjustment screw with an Allen wrench until the cover is free of the housing. Remove the cover and the O-ring. Discard the O-ring.
9. Turn the input shaft as required to center sector shaft teeth in the housing.
10. Tap the end of the sector shaft with

a soft-faced hammer to free it from the housing.

11. Remove the adjuster plug lock nut.
12. Remove the adjuster plug with spanner wrench T65P-3A537-A (Fig. 6).
13. Insert the tool shown in Fig. 7 into the end of the rack-piston until it contacts the worm shaft. Rotate the stub shaft in a counterclockwise direction until the worm is free of the rack-piston. Withdraw the rack-piston from the housing making sure that the tool is held all the way in the piston to prevent dropping the balls. Do not disassemble the rack-piston at this time.
14. Pull the stub shaft and valve assembly from the housing.
15. Lift the worm, lower thrust bearing and the races from the housing.

Assembly

1. Secure the steering gear housing in a vise.
2. Lubricate the worm shaft, lower thrust bearing, and races with steering gear fluid; then, position the thrust bearing and races on the worm.

Align the valve body drive pin on the worm, with the narrow pin slot in the valve body. Be sure O-ring seal between the valve body and the worm head is installed. Lubricate the teflon ring and lower cap O-ring with petrolatum.

3. Position the valve assembly and the worm shaft in the housing as a unit (Fig. 8). Do not push against the stub shaft as this could cause the stub shaft and cap to pull out of the valve body, allowing the spool seal to slip into valve body fluid grooves. Install the valve assembly by pushing on the outer diameter of the valve body housing with the finger tips. Be sure that the teflon rings are not binding inside the housing. The valve assembly is correctly seated when the fluid return hole in the gear housing is fully visible.
4. Place the tool shown in Fig. 9 over the end of the stub shaft.
5. Lubricate a new adjuster plug O-ring with petrolatum and install it in the adjuster plug groove.
6. Install the adjuster plug over the end of the stub shaft and tighten it just enough to be sure all parts are properly seated. Remove Tool T65P-3A537-B.
7. Install the adjuster plug locknut loosely on the plug.
8. Tighten the adjuster plug with wrench T65P-3A537-A while rotating the input shaft. As soon as additional drag is noted, back the adjuster plug off 1/8 turn. Measure the input shaft drag with an in-lb torque wrench.
9. Tighten the adjuster plug (Fig. 10) to obtain a 1-3 in-lb preload in excess of the drag that was measured previously. Tighten the adjuster plug lock nut and recheck the thrust bearing preload. Total preload must not exceed 8 in-lbs.
10. Install Tool T65P-3805-A in the steering gear housing. Position the rack-piston as shown in Fig. 11. Be sure that Tool T65P-3D517-A is contacting the worm shaft. Push the rack-piston inward until it contacts the worm shaft while keeping pressure applied to Tool T65P-3D517-A. Turn the stub shaft clockwise until the middle rack groove in the rack-piston is aligned with the center of sector shaft roller bearing. Remove the tool from the housing.
11. Lubricate a new O-ring with C1AZ-19582-A and position it in the sector shaft cover.
12. Thread the sector shaft cover on the adjusting screw until it bottoms then back it off 1-1/2 turns.
13. Install the sector shaft so that the center gear tooth meshes with the center groove in the rack-piston. Be sure that the cover O-ring is in place before pushing the cover down on the housing.
14. Install the cover screws and lock washers. Tighten to 30-35 ft-lbs.
15. Install a new adjuster lock nut halfway on the adjuster screw.
16. Install the end plug in the rack-piston. Tighten the plug to 50-100 ft-lbs torque.

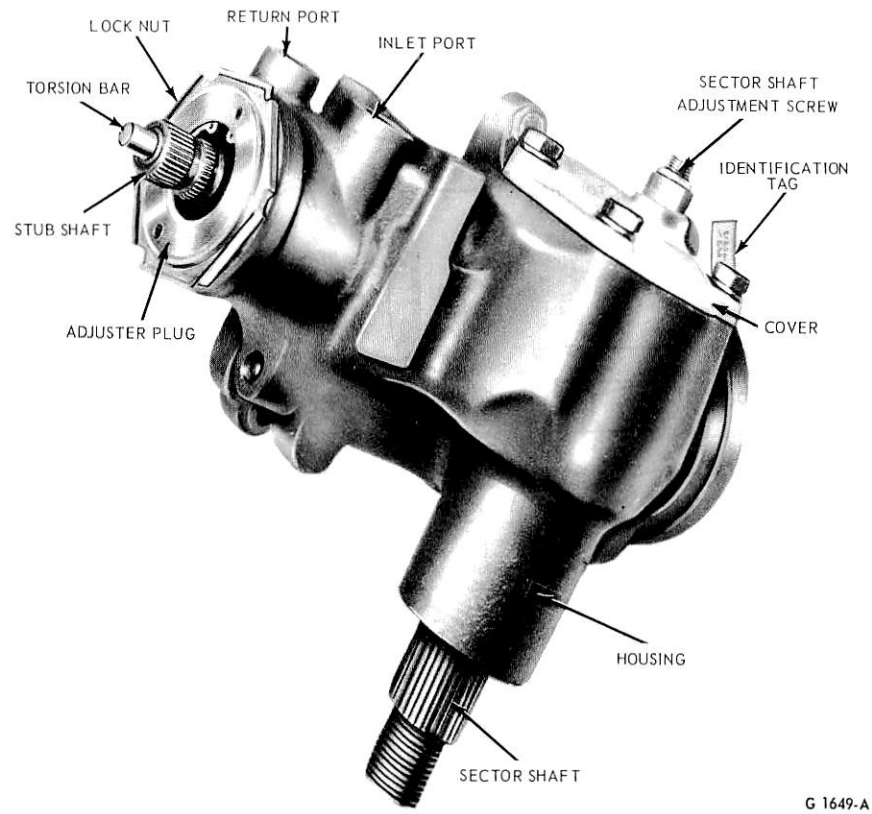

FIG. 3 Steering Gear—Exterior View

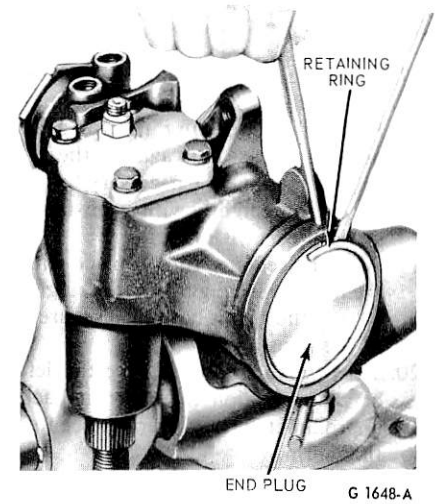

FIG. 4 Removing End Plug Retaining Ring

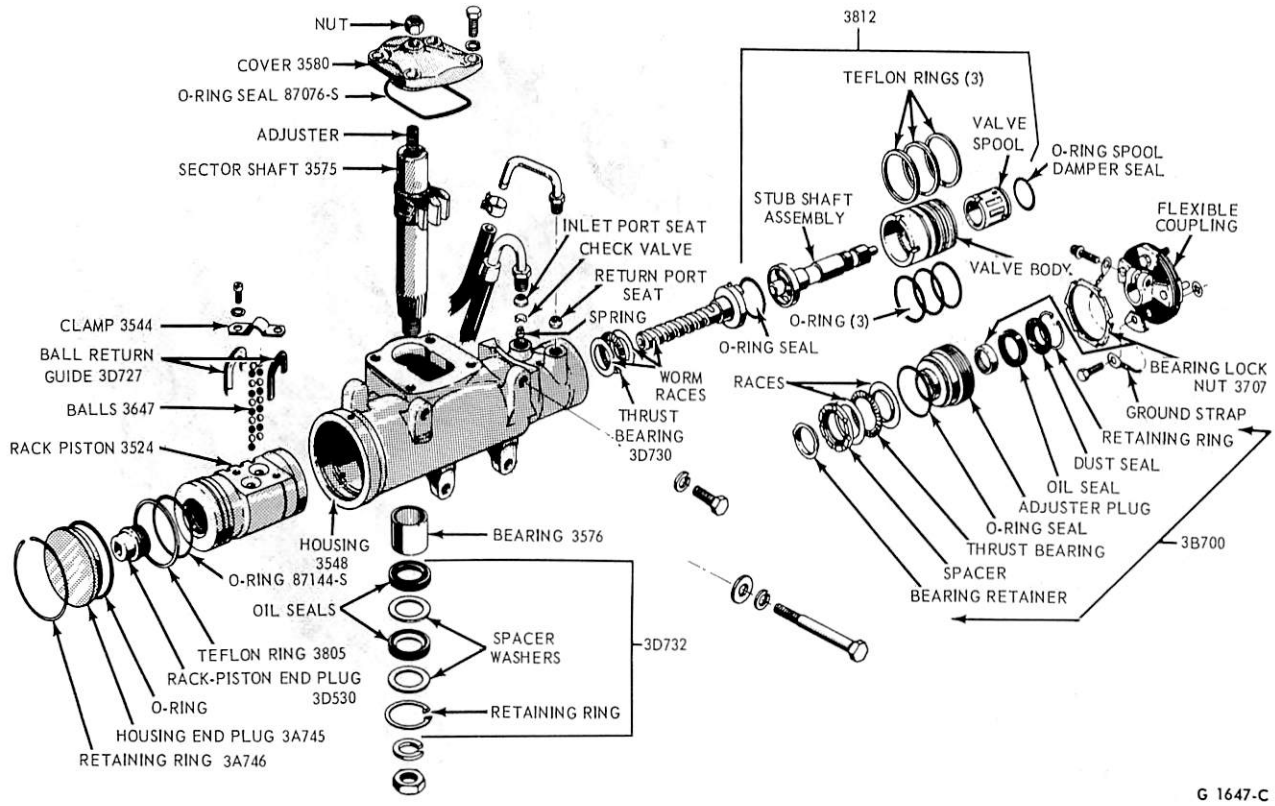

FIG. 5 Steering Gear Disassembled

17. Lubricate a new housing end plug O-ring and install it in the housing.
18. Place the end plug in the gear housing and seat it against the O-ring seal. It may be necessary to tap the end plug lightly with a soft-faced mallet to seat it properly.
19. Snap the retainer ring in place with the fingers. Tap lightly on the ring to be sure the ring is bottomed securely in the housing.
20. Turn the input shaft to the full left or right position then turn it back approximately 1-3/4 turns to center the worm.
21. Place an in-lb torque wrench on the input shaft as shown in Fig. 12.
22. With the gear on center and the sector shaft adjuster backed off, measure the total drag. With the gear on center, adjust the sector shaft thrust screw so that preload is 4-8 in-lbs in excess of total preload and drag. Readings are to be made through an arc not exceeding 20 degrees with the gear on center. Tighten the lock nut.
23. After obtaining the proper mesh load, tighten the sector shaft adjustment screw lock nut to 30-35 ft-lbs.

STEERING GEAR HOUSING

Disassembly and Assembly

1. Remove the snap ring (Fig. 13) that secures the sector shaft seals in the lower end of the housing. Remove the lower spacer washer.
2. Remove the lower seal (double lip), spacer washer, upper seal (single lip) with Tools T58L-101-A and T59L-100-B (Fig. 14).
3. Check the housing bearing for wear and remove the bearing only if worn or damaged. Working from the lower end of the housing (Fig. 15) press the bearing out of the housing. Discard the bearing.
4. Working from the upper end of the housing, press in a new bearing until the upper end is 0.030 inch below the housing bore. When installing the bearing, make sure it is pressed in from the identification end (stamped end).
5. Lubricate new sector shaft seals (Fig. 11) in D2AZ-19582-A hydraulic fluid. Install the single lip seal first, then a back-up washer. Using special tool (Fig. 16), drive the seal and washer in far enough to provide clearance for the other seal

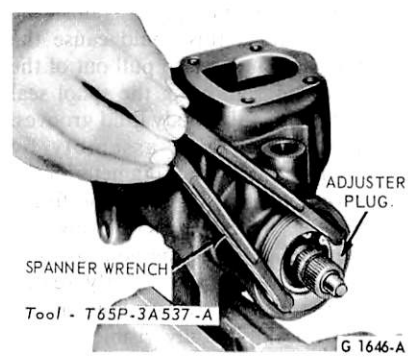

FIG. 6 Removing Adjuster Plug

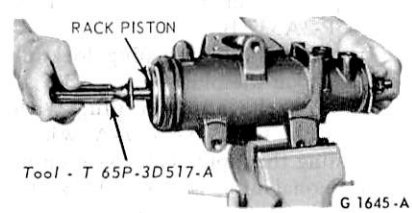

FIG. 7 Removing Rack Piston

and back-up washer and the retaining ring. The seal must not bottom on the end of the counterbore. Install the double lip seal and the second back-up washer. Again using the special tool, drive the seal and back-up washer in only far enough to provide clearance for the retaining ring. Install the sector shaft seal retaining ring with snap ring pliers, making certain that the ring is seated properly.

6. To remove a damaged port seat, use a 5/16-18 inch U.S. thread (coarse) tap and turn it two turns into the seat. Coat the end of the tap with petrolatum to prevent chips from entering the passage while tapping the seat.
7. Thread a bolt and nut with a flat washer into the tapped hole (Fig. 17).
8. Hold the bolt from turning and tighten the nut to extract the seat. Discard the seat.
9. Remove the check valve and spring from the inlet port.
10. Position the spring, check valve and new seat in the inlet port.
11. Use the tool shown in Fig. 18 and drive the seat into place.
12. Install the outlet port seat in the same manner.
13. A stop ring is located in the piston bore to limit piston travel. Do not attempt to remove this ring. If the stop ring is damaged, it will be necessary to replace the housing assembly.

ADJUSTER PLUG

Disassembly and Assembly

1. Lift the adjuster plug off the stub shaft (Fig. 5).
2. Pry the thrust bearing retainer off the adjuster plug as shown in Fig. 19. Be careful not to score the needle bearing bore. Discard the retainer.
3. Lift the spacer, thrust bearing, races and the O-ring, from the plug (Fig. 20). Discard the O-ring.
4. If necessary to replace the roller bearing, remove the dust seal retaining ring. Working from the spacer end of the adjuster plug, remove the roller bearing, oil seal and the dust seal as shown in Fig. 21. If the roller bearing does not need replacing do not remove it. Pry the dust seal and the oil seal from the adjuster plug with a screwdriver.
5. Place a new roller bearing on the tool shown in Fig. 21 with the bearing manufacturer's identification facing toward the tool.
6. Position the bearing and tool in the bore. Drive the bearing into the plug until it is flush with the bottom surface of the stub shaft seal bore.
7. Lubricate a new oil seal with D2AZ-19582-A. Install the seal with Tool T65P-3D526-A pressing it into the plug far enough to provide clearance for the dust seal and the snap ring (Fig. 22).
8. Lubricate a new dust seal with D2AZ-19580-A and install it with its smooth rubber surface facing outward.
9. Secure the dust seal with the ring, making sure that the ring is properly seated.
10. Lubricate a new O-ring seal with vaseline and install it on the adjuster plug.
11. Assemble the thrust bearing outer race, thrust bearing, inner race, and the thrust bearing spacer on the adjuster plug (Fig. 20).
12. Install a new bearing retainer on the adjuster by **carefully** tapping on the flat surface of the retainer (Fig. 23).

STUB SHAFT AND ROTARY VALVE ASSEMBLY

Disassembly

Disassembly of the valve (Fig. 24) is not recommended unless the valve components require cleaning due to

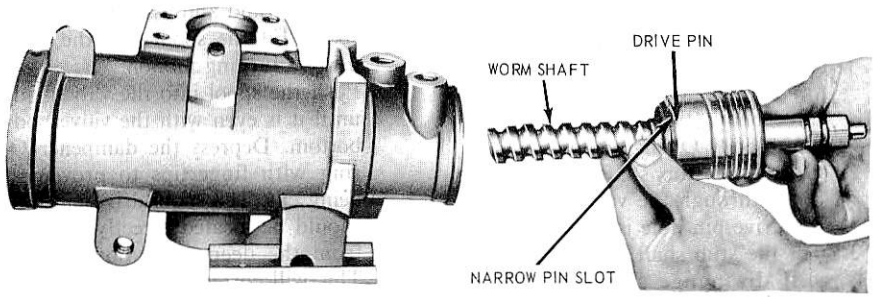

FIG. 8 Installing Valve and Worm Shaft in Housing

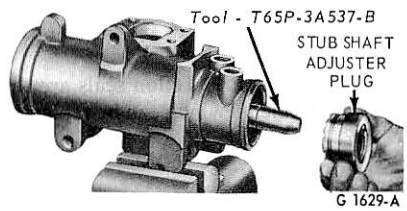

FIG. 9 Installing Adjuster Plug

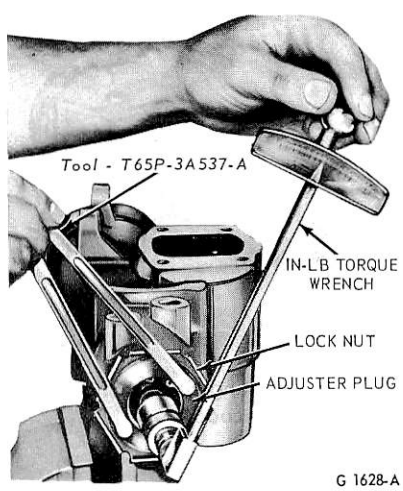

FIG. 10 Adjusting Thrust Preload

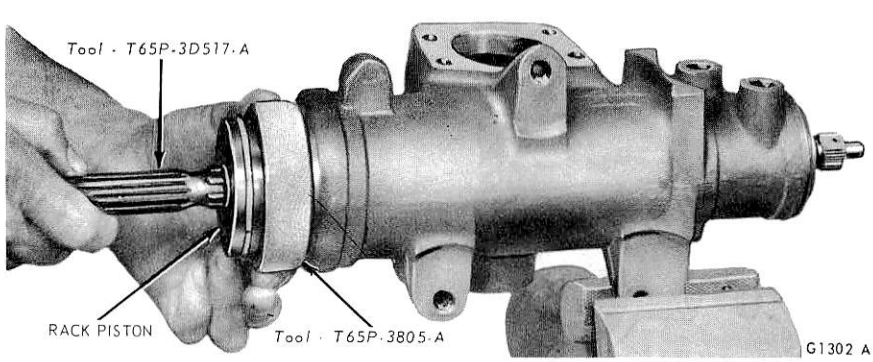

FIG. 11 Installing Rack-Piston

system contamination or replacement of the dampener O-ring.

1. Invert the valve and tap on the work bench (torsion bar end) until the torsion bar cap separates from the valve body (Fig. 25). Discard the cap-to-body O-ring.
2. Grasp the stub shaft and push it down through the valve body until the drive pin hole is visible.
3. Tilt the stub shaft so the drive pin will disengage from the spool. Remove the stub shaft from the valve body and spool assembly.
4. Slide the spool out of the top of the valve body. Do not attempt to remove the spool through the bottom as it may hang up or be damaged.

Assembly

The O-ring and Teflon seals are the only components which can be replaced.

1. Dip the dampener O-ring in power steering fluid and assemble to the spool. Fit the spool into the body using a turning motion.
2. Push the spool into the valve body until it is even with the valve body bottom. Depress the dampener O-ring with fingertips to prevent it being cut. The spool drive pin hole should be located directly opposite from the deep valve body notch. This will correctly position the cap notch to the body pin.
3. Insert the stub shaft into the spool with the stub shaft drive pin lined up with the mating spool hole.
4. Insert the drive pin into the spool hole and pull the assembly into the valve body keeping the cap slot and body pin aligned. When the cap seats correctly in the valve body, the top surface of the cap should be at least 3/32 inch below the deep body notch.
5. Replace the cap-to-body O-ring.

RACK PISTON

Disassembly and Assembly

1. Cut the Teflon ring and the O-ring from the piston.
2. Place the assembly on a clean lintfree cloth and remove the screws that attach the ball return guide clamp to the rack-piston and remove the clamp (Fig. 26).
3. Lift the ball return guides from the rack-piston.
4. Remove Tool T65P-3D517-A from the piston and remove the remaining balls.
5. Thoroughly clean all parts.
6. Lubricate a new O-ring and Teflon ring. Install the O-ring on the piston being careful not to twist it. Slide the Teflon ring into place being careful not to stretch it any more than necessary.
7. Slide worm (Fig. 27) fully into the rack-piston. Load 16 balls into the guide hole nearest the Teflon ring while slowly rotating the worm counterclockwise to feed the balls through circuit. Alternate the dark colored balls with the polished balls through the circuit.

Apply petrolatum liberally to one of the ball return guides and install the remaining balls in the guide. The constant ratio gear requires 22 balls while the variable ratio gear has 24 balls total. Place the other half of the guide in

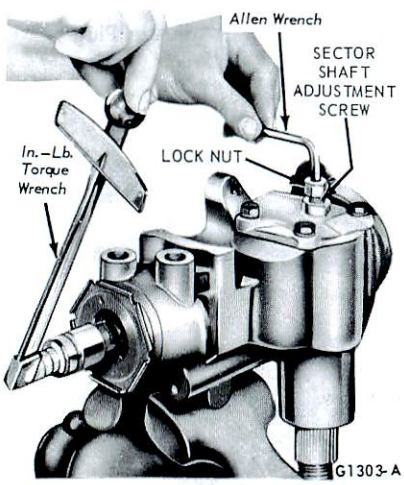

FIG. 12 Adjusting Sector Shaft Mesh Load

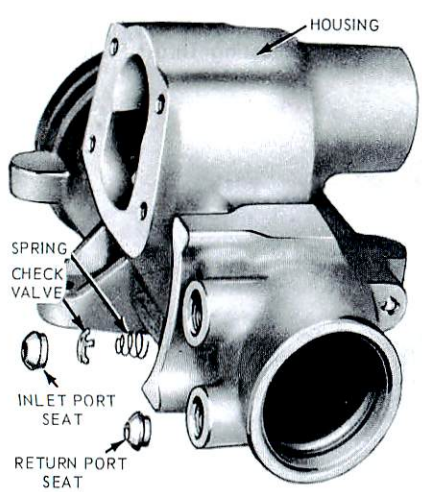

FIG. 13 Steering Gear Housing Disassembled

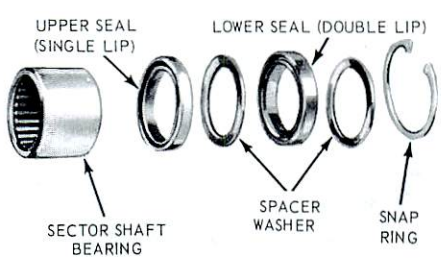

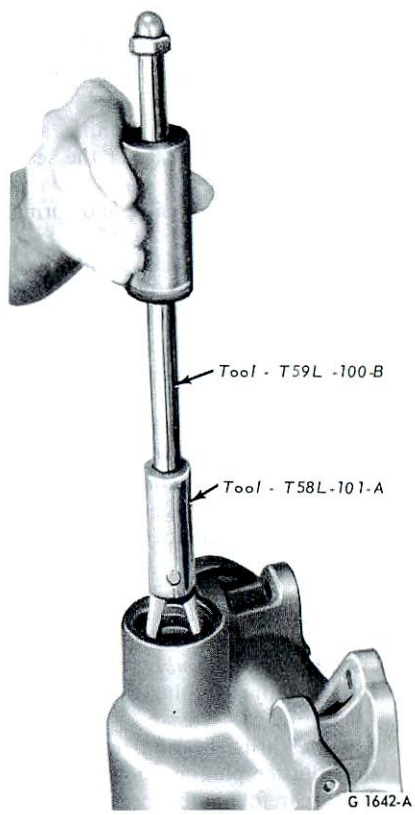

FIG. 14 Removing Sector Shaft Seals

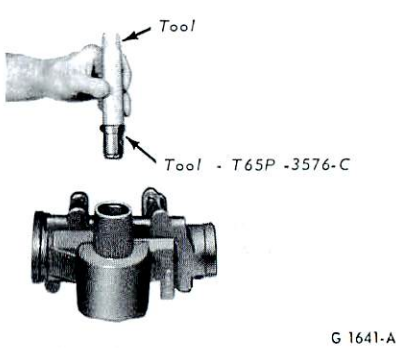

FIG. 15 Removing Sector Shaft Bearings

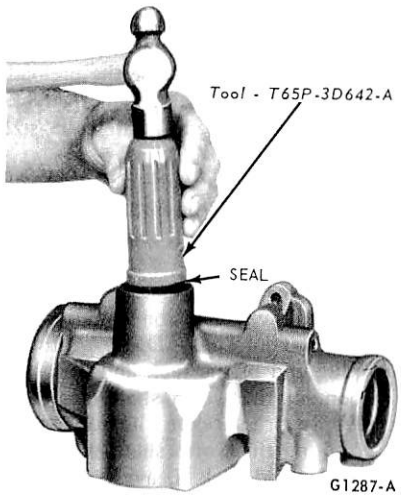

FIG. 16 Installing Sector Shaft Seal

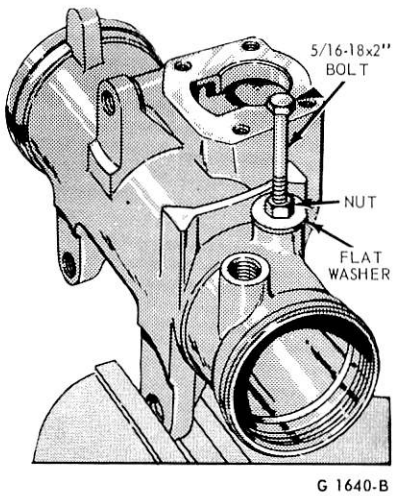

FIG. 17 Removing Port Seal

position and insert them into holes in the rack-piston. Be sure that the dark ball in the guide is installed next to the polished ball in the rack-piston. Install the ball return guide clamp with screws and lock washers. Tighten the screws to specification.

8. The worm groove is ground with a high point in the center. When the rack-piston passes over this high point there should be a preload of 1-4 in-lbs. Clamp the rack-piston in a vise with soft jaws with the worm shaft pointing up. To avoid distortion, do not tighten the vise too tight.
9. Place the valve assembly on the worm, engaging the worm drive pins. Rotate the worm until it extends 1-1/4 inch from the rack-piston to the thrust bearing face. This is the center position.
10. Place an in-lb torque wrench with a 3/4 inch deep wall 12-point socket on the stub shaft, and rotate the wrench through an arc of approximately 60 degrees in both directions several times, then take a torque reading. The highest average reading obtained with the worm rotating should be between 1-4 in-lbs.
11. If this reading is too high or too low a new set of balls should be installed. Service replacement balls are available in the sizes shown in Fig. 28.

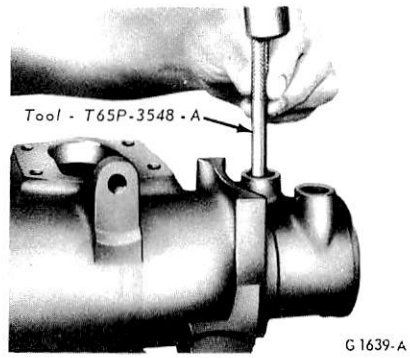

FIG. 18 Installing Inlet Port Seat

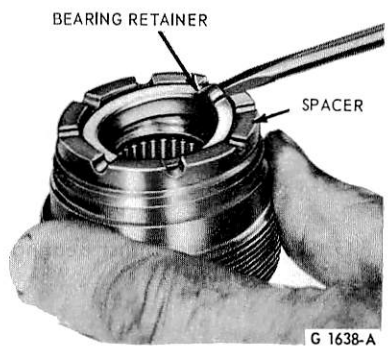

FIG. 19 Removing Thrust Bearing Retainer

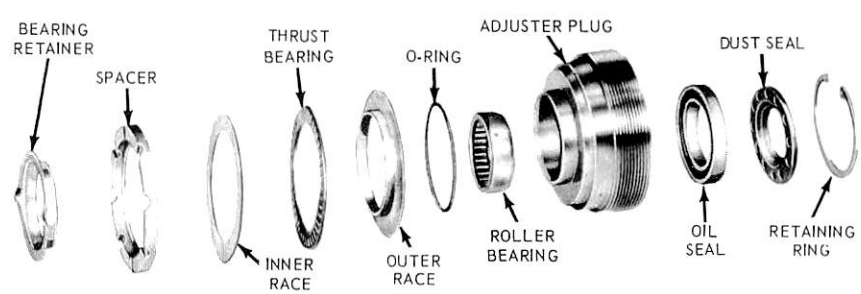

FIG. 20 Adjuster Plug Disassembled

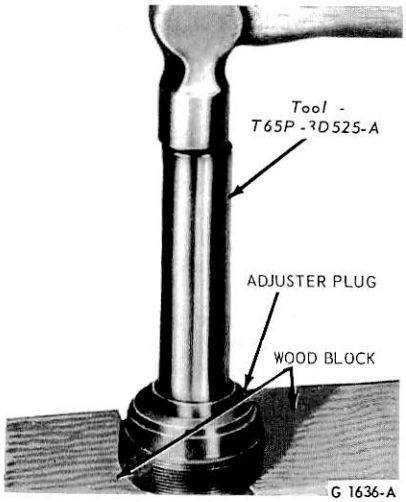

FIG. 21 Removing or Installing Roller Bearing from Adjuster Plug

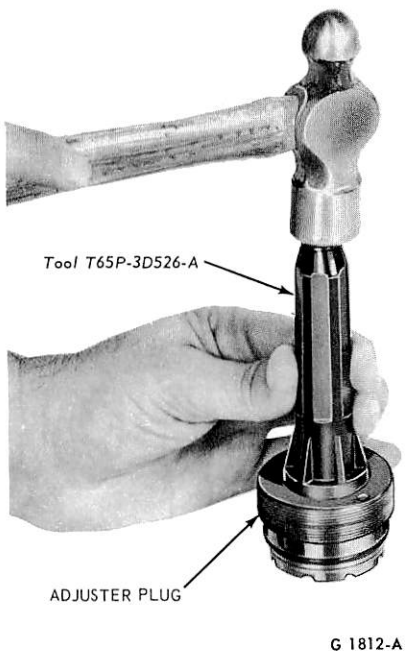

FIG. 22 Installing Oil Seal in Adjuster Plug

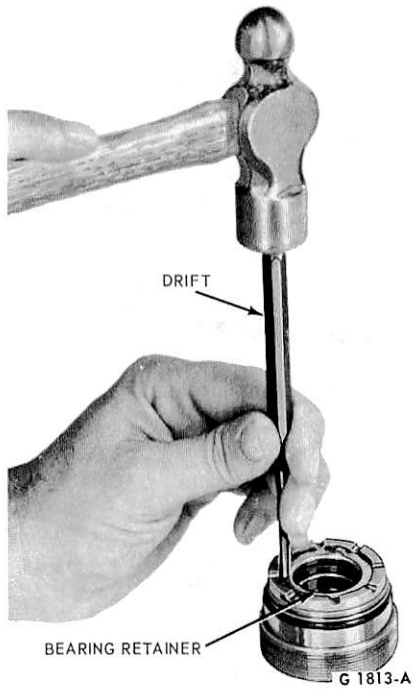

FIG. 23 Installing Thrust Bearing Retainer

12. Note the ball size stamped on the rack piston and install the next size larger balls to increase the preload. If no number is stamped on the rack-piston, the original ball code size was No. 7.

A change of one ball size larger will increase the preload approximately one in-lb. Final preload on replacement balls should be 2-3 in-lbs.

Remove the valve assembly from the worm and the rack piston from the vise.

13. Insert Tool T65P-3D517-A into the plug end of the rack and piston to contact the worm shaft (Fig. 29). Apply pressure on the tool while rotating the worm shaft out of the piston and rack. Leave the tool in place until the piston is installed in the housing.

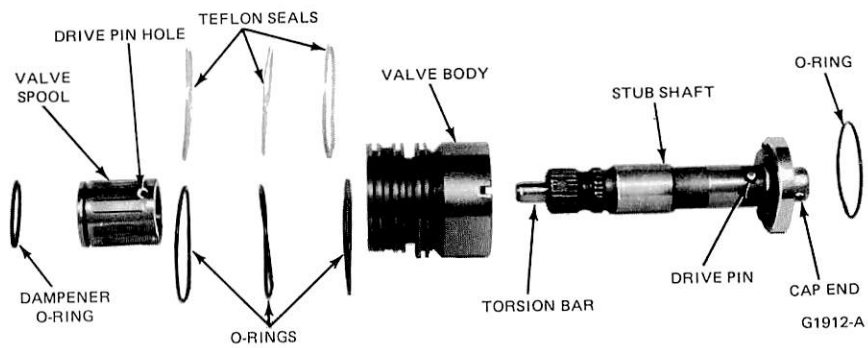

FIG. 24 Rotary Valve Disassembled

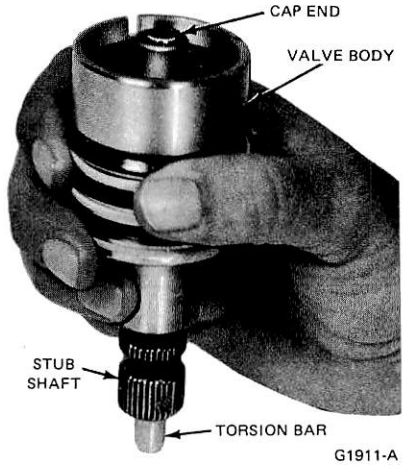

FIG. 25 Removing Spool from Rotary Valve

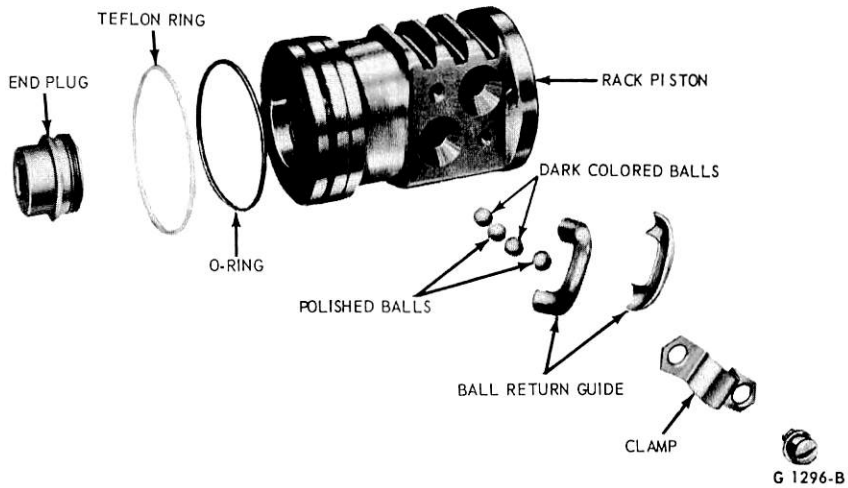

FIG. 26 Rack Piston Disassembled

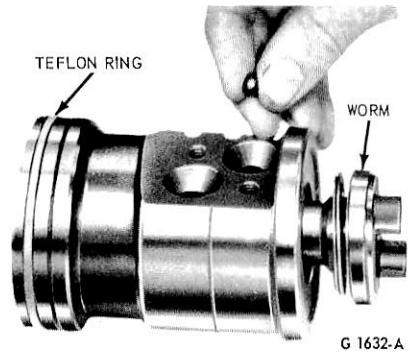

FIG. 27 Assembling Rack Piston

Code Size	Diameter Mean	Size Range of Ball (Inch)
6	0.28117	0.28112-0.28122
7	0.28125	0.28120-0.28130
8	0.28133	0.28128-0.28138
9	0.28141	0.28136-0.28146
10	0.28149	0.28144-0.28154
11	0.28157	0.28152-0.28162

CG1814-A

FIG. 28 Worm Ball Sizes

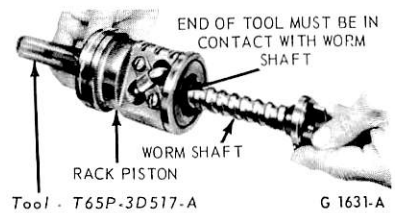

FIG. 29 Installing Tool in Rack Piston

SPECIFICATIONS

SAGINAW INTEGRAL POWER STEERING GEAR TORQUE LIMITS (FT-LB)

Description	Torque Limit	Description	Torque Limit
Sector Shaft Cover Bolts	30-35	Preload Adjusting Lock Nut	50-110
Mesh Load Adjusting Screw Lock Nut	30-35	Piston End Cap	50-100
Ball Return Guide Clamp Screw	3-6	Hose Clamps to Cooler	10-18 (In-Lb)

SAGINAW INTEGRAL POWER STEERING GEAR SPECIFICATIONS

Type	Recirculating Ball
Ratio	24:1
Turns of Steering Wheel (Lock to Lock – Linkage Disconnected)	5 4/5
Fluid Specification	D2AZ-19582-A
Fluid Capacity (Included in Reservoir Fill)	1.6 Pt. (Approx.)
Total Mesh Load Over Mechanical Center	20 In-Lb Max.
Worm Bearing Preload	10 In-Lb Max.
Total Mesh Load Over Worm Bearing Preload	6-10 In-Lb
Worm to Piston Preload	Select Recirculating Ball Size to Provide .5-4.5 In-Lb Preload

SAGINAW INTEGRAL POWER STEERING GEAR SPECIAL SERVICE TOOLS

Tool No.	Description	Tool No.	Description
T59L-100-B	Impact Slide Hammer	T65P-3D525-A	Adjuster Plug Bearing Remover and Installer
T58L-101-A	Puller Attachment	T65P-3D526-A	Adjuster Plug Seal Installer
T65P-3548-A	Oil Line Connector Seat Installer	T65P-3A537-A	Bearing Preload Spanner Wrench
T65P-3576-C	Sector Needle Bearing Remover and Installer Adapter	T65P-3A537-B	Adjuster Plug Seal Protector
T65P-3805-A	Piston Rack Ring Compressor	T65P-3D642-A	Sector Shaft Seal Installer
T65P-3D516-A	Rack Piston Arbor		

CG1948-B

PART 13-43 Semi-Integral Power Steering Gear—Ross HPS-70

Applies To W-Series Only

COMPONENT INDEX	Page	COMPONENT INDEX	Page
ADJUSTMENTS		DISASSEMBLY AND ASSEMBLY	
Mesh Load	43-02	Gear	43-03
Stud Roller Bearing	43-02	Valve Housing	43-04
Thrust Bearing	43-02	REMOVAL AND INSTALLATION	43-03
DESCRIPTION	43-01	SPECIFICATIONS	43-05

DESCRIPTION

STEERING GEAR

The Power Steering Gear used in W-Series vehicles (Fig. 1) is a semi-integral hydraulic steering gear. It incorporates a hydraulic control valve on a single stud cam and lever mechanical steering gear. Steering effort applied to the steering wheel actuates the valve which directs hydraulic fluid from the power steering pump to the power cylinder.

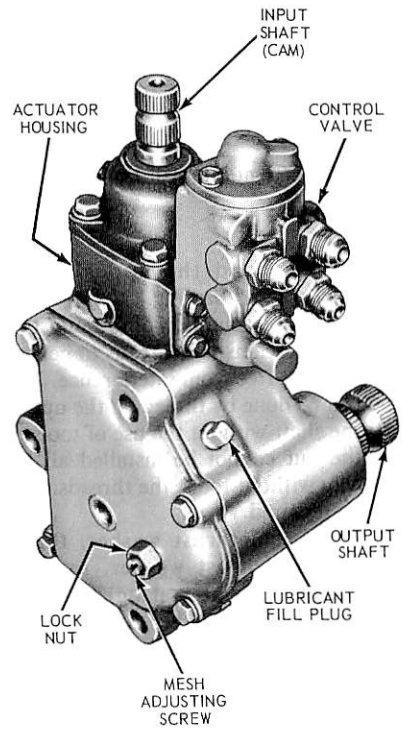

FIG. 1 Model HPS-70 Power Steering Gear

ADJUSTMENTS

MESH LOAD

The groove of the cam is cut shallower and narrower in the mid-position range of stud travel. This is to provide close adjustment in the straight ahead position. This adjustment must be made through the mid-position to the high spot. **Do not adjust the mesh adjustment in any position except the straight ahead position. Backlash is normal when the steering gear cam is in the end position, (wheels turned to one side).**

1. Disconnect the drag link and power steering cylinder from the Pitman arm and the universal joint from the gear input shaft.
2. Loosen the adjusting screw lock nut. Then, turn the adjusting screw (Fig. 1) clockwise until a 15 in-lb torque is required to turn the steering gear through the mid-position.
3. Back out (counterclockwise) the adjusting screw 1/8 turn.
4. Tighten the adjusting screw lock nut to 15-20 ft-lb torque to lock the adjustment. Be sure the adjusting screw does not turn when tightening the lock nut.
5. Turn the gear through its full travel with the engine off to check the adjustment. The torque at the input shaft should be 2 to 8 in-lb for the full travel (stop to stop).
6. Connect the drag link and power steering cylinder to the Pitman arm and the universal joint to the steering gear input shaft.

THRUST BEARING

1. With the steering linkage disconnected, turn the steering gear off the center position to free the stud roller bearing from the cam groove.
2. Remove the clamp bolt and nut from the input shaft (cam) U-joint and separate the joint from the input shaft.
3. Remove four upper cover attaching screws and remove the upper cover from the gear. Care must be used to remove burrs and paint from the input shaft to avoid cutting the seal.
4. Install the upper cover attaching screws in the actuator housing with 3/8 inch thick spacers under the screw heads. This will hold the actuator and cam assembly in the gear during the adjustment.
5. Straighten the lock washer prong and remove the adjusting nut, lock washer, and the upper thrust washers and bearing.
6. Check the condition of the adjusting nut and camshaft threads to be sure they are free from interference. This can be done by threading the nut on the shaft without the use of tools. If the nut cannot be installed all the way without tools, the threads must be repaired.
7. Position a thrust washer, thrust bearing, thrust washer, tongued washer (with internal lug) and a new lock washer on the shaft (Fig. 2). Then, install the adjusting nut. **Do not bend the lock washer prongs at this time.**
8. Torque the adjusting nut to 10 ft-lbs. Then, back the nut off 10 degrees to 20 degrees (approximately 1 1/2 widths of the tongued washer lug). **The centering washers must be properly centered on the actuator during this adjustment.** Bend the lock washer lug that is nearest in alignment with a notch in the adjusting nut so that the lug is tight against the notch root.
9. Remove the 3/8 inch spacers and install the upper cover.
10. Position the U-joint on the steering gear input shaft and install the clamp bolt and nut.

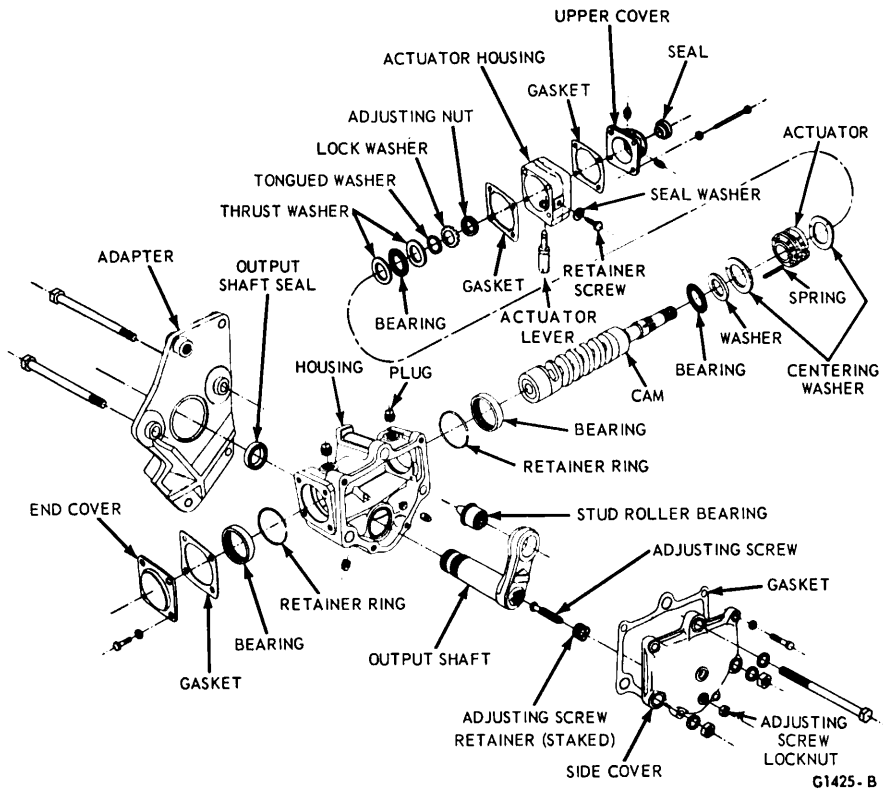

FIG. 2 Semi-Integral Power Steering Gear — Disassembled

STUD ROLLER BEARING

The output shaft must be removed from the steering gear to adjust the stud roller bearing.

The operation of a properly adjusted roller bearing may feel rough when turned by hand. However, under a steering load it will be smooth and will give normal service life.

1. Wash the bearings in solvent, dry, and lubricate with gear lubricant. If a roller is lost or damaged, a new set should be installed. **Do not make partial replacement of the rollers.**
2. Assemble the bearing and install a new locking washer.
3. Install the adjusting nut and tighten as required to obtain a 1 to 4 in-lb preload on the bearing.
4. Rotate the stud several complete turns in each direction. Then check the rotational torque of the bearing and re-adjust to 1-4 in-lb if necessary.
5. Lock the adjustment with two lock washer prongs against the side of the nut. **If the lock washer is not replaced, the used prongs should be removed from the washer.**
6. Lubricate the bearing with steering gear lubricant.

REMOVAL AND INSTALLATION

STEERING GEAR

Removal

1. Unlatch the cab and raise it to the full tilt position.
2. Remove the grille from the front of the cab.
3. Mark the power steering hose locations and disconnect the hoses from the steering gear control valve. Plug the hoses and the valve fittings with suitable plugs and caps.
4. Remove the cotter pin and nut attaching the hydraulic cylinder to the Pitman arm. Remove the cylinder stud from the Pitman arm and position the cylinder to one side.
5. Remove the cotter pin and nut attaching the drag link to the Pitman arm. Remove the drag link stud from the Pitman arm and position the drag link out of the way.
6. Remove the steering shaft U-joint nut, bolt and flat washer and separate the joint from the steering gear input shaft.
7. Remove the three gear and bracket-to-frame bracket attaching bolts four nuts, flat washers and cotter pins and remove the gear and bracket from the vehicle.
8. Position the gear bracket in a vise and remove the Pitman arm from the output shaft.
9. Remove the three bolts and two nuts attaching the gear to the bracket and separate the gear from the bracket.

Installation

1. Position the gear to the bracket and install the bolts and nuts. Torque the bolt and nuts to specification.
2. Install the Pitman arm on the output shaft as shown in Fig. 3, and torque the clamp bolt to specification. Install cotter pin.
3. Position the steering gear and bracket to the frame bracket and install the bolts, hardened flat washers and nuts. Torque the bolts and nuts to specification and install the cotter pins.
4. Connect the drag link to the Pitman arm. Torque the nut to specification and install the cotter pin.
5. Connect the hydraulic cylinder to the Pitman arm. Torque the nut to specification and install the cotter pin.
6. With the wheels and steering wheel in the straight ahead position, place the steering shaft U-joint on the steering gear input shaft. Install a new bolt, nut and the hardened flat washer retaining the steering shaft to the steering gear and torque the nut to 28-35 ft-lbs. **Make certain the bolt is engaged in the slot of the steering gear input shaft.**

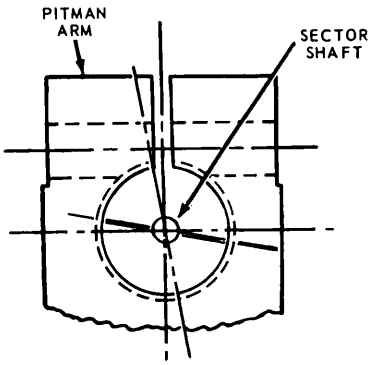

FIG. 3 Pitman Arm Installation — W-Series

7. Connect the hoses to their respective fittings on the control valve.
8. Fill the reservoir with fluid and lower the cab. Start the engine and turn the steering wheel from side to side three or four times to bleed air from the system.
9. Install the grille on the front of the cab.

DISASSEMBLY AND ASSEMBLY

STEERING GEAR

Prior to disassembly, drain the gear assembly and thoroughly remove all outside dirt around the fittings before disconnecting the hoses. The port holes should be plugged immediately after disconnecting the hoses and before removing the gear from the vehicle. Finish cleaning and drying the gear before placing it on the work bench.

During disassembly of any component parts, make sure a clean work bench or table is used. All internal parts should be cleaned in clear, clean solvent and blown dry with clean air. Avoid wiping valve parts with a cloth as lint may actually cause binding or sticking of closely fitted parts. Never steam clean hydraulic steering assemblies and do not force or abuse closely fitted parts.

Disassembly

1. Remove the drain plugs and drain all lubricant from the gear housing.
2. Remove the side cover attaching bolts.
3. Remove the lock nut from the adjusting screw in the side cover.
4. Turn the adjusting screw to remove the cover from the screw and remove the gasket from the housing.
5. Remove any dirt, rust or burrs from the output shaft and pull the output shaft from the housing.
6. Remove four valve body attaching bolts and remove the valve body from the actuator housing.
7. Remove the actuator lever (Fig. 2) from the actuator housing.
8. Remove four bolts attaching the upper cover and actuator housing (Fig. 2) to the steering gear housing.
9. Remove the cam, actuator housing, and upper cover as an assembly from the steering gear housing.
10. Remove the upper cover from the cam and actuator housing.
11. Remove the actuator retaining screw from the actuator housing and remove the housing from the cam.
12. Remove four end cover attaching bolts and remove the cover and gasket from the housing.
13. If necessary, remove the two cam bearing retaining rings from the housing.
14. If necessary, press the cam bearings from the housing with a socket.
15. If necessary, remove the output shaft seal from the housing.
16. Place the cam in a soft jaw vise.
17. If necessary, straighten the tab on the lock washer and remove the adjusting nut, lock washer, and tongued washer.

18. If necessary, lift the thrust washers, bearings, and actuator from the cam. Be careful not to lose the springs or their locations in the actuator.
19. If necessary, remove the nut and tab washer from the output shaft follower and remove the stud, roller bearings, and race.

Assembly

1. Install the two cam bearing retainer rings in the steering gear housing.
2. Press the cam bearings in the housing with a socket of slightly smaller diameter than the cam bore. (Press only against the numbered end of the bearing to prevent crushing the end of the bearing.) Press the bearing lightly against the retaining ring.
3. Install the thrust bearing, washer, and centering washer on the cam (Fig. 2).
4. Install the actuator and springs, centering washer, thrust washer, thrust bearing, thrust washer, tongue washer (with internal lug), new lock washer, and adjusting nut on the cam (Fig. 2).
5. Place the cam in a soft jaw vise.
6. Tighten the adjusting nut to 10 ft-lb torque. Then, back the nut off 10 degrees to 20 degrees (approximately 1 1/2 widths of the tongued washer lug). Bend the washer lug that is nearest in alignment with a notch in the adjusting nut so that the lug is tight against the notchroot. **The centering washers must be centered on the actuator during this adjustment.**
7. Install the cam and actuator into the gear housing from the end shown in Fig. 2.
8. Position the gasket and actuator housing over the actuator and install the actuator retainer screw and lock washer. Bend the washer against the retainer screw to lock the screw in place.
9. Install a new seal in the upper cover.
10. Position the upper cover and gasket to the actuator housing and install the four attaching bolts. Torque the bolts to specification.
11. Position the gasket and lower end cover to the housing and install the four attaching bolts. Torque the bolts to specification.
12. Install the stud, roller bearings, and cone in the output shaft and install the attaching nut and washer. Tighten the nut as required to obtain a 1-4 in-lb rotational preload.
13. Rotate the stud several complete turns in each direction. Then, check the rotational torque of the bearing and readjust to 1-4 in-lb preload if necessary.
14. Lock the adjustment with two lock washer prongs against the side of the nut. **If the lock washer was not replaced, the used prongs must be removed from the washer to prevent the prongs from being used again.**
15. Install a new output shaft seal in the housing.
16. Check the end play between the adjusting screw and the output shaft. If the end play of the assembled output shaft adjusting screw exceeds .005, replace it with a new threaded adjusting screw retainer. Stake the retainer into any 2 of 4 slots into the slots on the end of the output shaft using a chisel point punch. Adjust to no perceptible end play to .002 loose.
17. Position the side cover gasket to the housing.
18. Position the side cover to the output shaft adjusting screw and thread the screw through the housing cover until the cover is against the housing. Install the lock nut on the adjusting screw.
19. Install the housing cover attaching bolts and torque to specification.
20. Adjust the side cover adjusting screw as required to provide a 15 in-lb torque at the input shaft as the gear is moved through the center position.
21. Back the adjusting screw out 1/8 turn and tighten the adjusting screw lock nut to 15-20 ft-lbs torque. **Be sure the adjusting screw does not turn when tightening the lock nut.** The torque at the input shaft should be 2 to 8 in-lbs for the full travel (stop to stop) of the gear. This torque includes lubricated seal friction.
22. Fill the actuator with specified lubricant through the lever opening until it is visible in the pipe plug hole (approximately 2 1/4 ounces).
23. Fill the end of the valve with lubricant (approximately 1/2 ounce) through the lever opening.
24. Insert the actuator lever into the actuator housing (Fig. 2).
25. Position the valve body and gasket to the actuator housing and install the attaching screws. Torque the screws to specification.
26. Install three plugs in the gear housing.
27. Fill the housing with lubricant and install the remaining plug.

VALVE HOUSING

Disassembly

1. Remove the retainer, cover plate, and O-ring (Fig. 4) from the valve

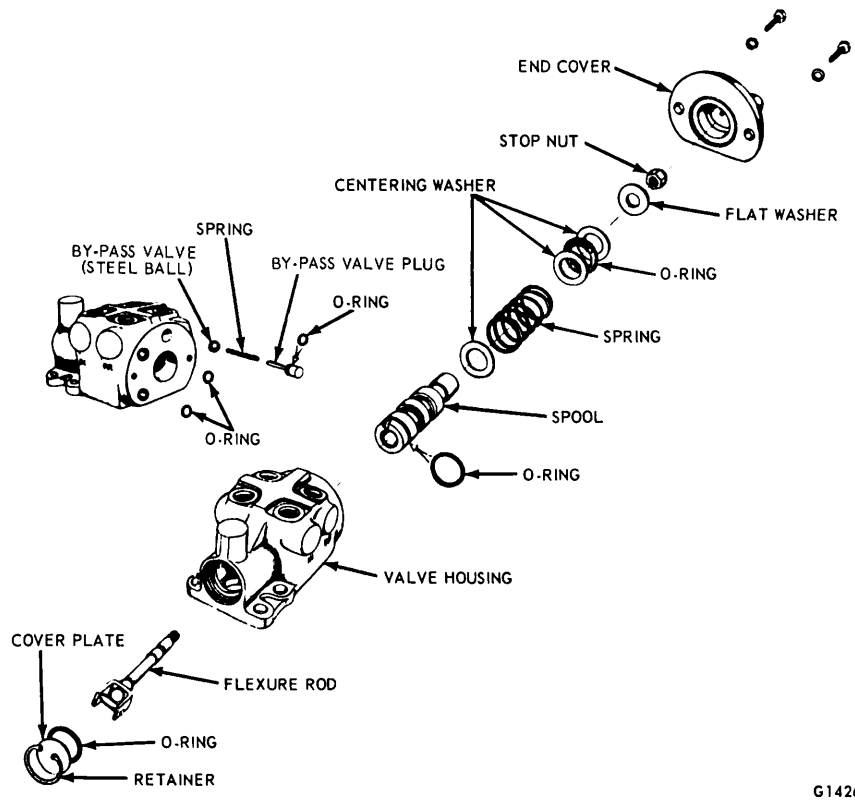

FIG. 4 Valve Housing Disassembled

housing.
2. Remove the end cover and O-ring from the other end of the housing.
3. Remove the lock nut and washer from the flexure rod and pull the rod out of the valve housing.
4. Push the spool out of the housing in the same direction as the flexure rod was removed.
5. Remove the O-ring from the spool.
6. Remove the by-pass valve plug, spring and steel ball from the valve housing. Remove the O-ring from the plug.
7. Remove the centering washers, spring and seal from the valve housing.

Assembly

All parts must be clean and should be lubricated with light oil before assembly.

1. Install the O-ring on the by-pass valve plug (Fig. 4).
2. Install the by-pass valve (steel ball), spring, and by-pass valve in the valve housing.
3. Install the O-ring on the valve spool.
4. Install the spool in the valve housing with a twisting motion after lubricating the O-ring. **The O-ring end of the spool must be toward the actuator lever opening end of the housing (Fig. 4).**
5. Insert the flexure rod through the valve spool.
6. Install the centering washer, spring, centering washer, O-ring, centering washer, flat washer and new stop nut on the flexure rod. **The stop nuts should never be re-used.** Torque the stop nut to 125 to 150 in-lbs. Check to be sure the valve spool can be moved in the valve housing.
7. Position the two O-rings in the end of the valve housing and install the end cover.
8. Install the O-ring, cover plate, and retainer in the other end of the housing.

SPECIFICATIONS

ROSS SEMI-INTEGRAL POWER STEERING GEAR – SERVICE SPECIFICATIONS

Model	HPS 70
Type	Semi-Integral
Valve	V 14
Ratio	19:24:19
Lubricant (Gear)	SAE 90 Multi-Purpose Gear Lube ①
Hydraulic Fluid	C1AZ-19582-A
Lubricant Capacity	2.5 Pints
① Do not use high pressure when filling or adding lubricant to gear.	

ROSS SEMI-INTEGRAL POWER STEERING GEAR-TORQUE LIMITS

Description	Ft-Lb
Valve Body to Actuator Housing	10-15
Pitman Arm to Output Shaft	150-205
Flexure Rod Stop Nut	125-150 In-Lb
Stud Roller Bearing	1-4 In-Lb
Cam Adjusting Nut	① 10
① Back off nut 10^0 to 20^0 after torque.	

CG1891-B

PART 13-44 Integral Power Steering Gears—Ross HF-54, HF-64

Applies To F-B-L-LN-LNT-LTS 500 Through 9000 Series Only

COMPONENT INDEX	Page	COMPONENT INDEX	Page
ADJUSTMENTS		DESCRIPTION	44-01
Sector Shaft	44-02	DISASSEMBLY AND ASSEMBLY	44-03
Unloader Valve	44-02	REMOVAL AND INSTALLATION	44-03
CLEANING AND INSPECTION	44-06	SPECIFICATIONS	44-09

DESCRIPTION

STEERING GEAR

The Ross Hydrapower HF-54 and HF-64 gears, used on all F-B-LN-L-LT-LNT-LTS-500 through 9000 Series vehicles are fully integral steering gears incorporating a hydraulic control valve, a power cylinder, and a mechanical means of steering control (Figs. 1 and 2).

The power of the cylinder is transmitted to the steering gear output (sector shaft) shaft by means of gear teeth on the rack piston mating with the sector gear. The flow of fluid from the engine-driven pump is directed to the power cylinder via the control valve. The valve is located concentric with the input shaft.

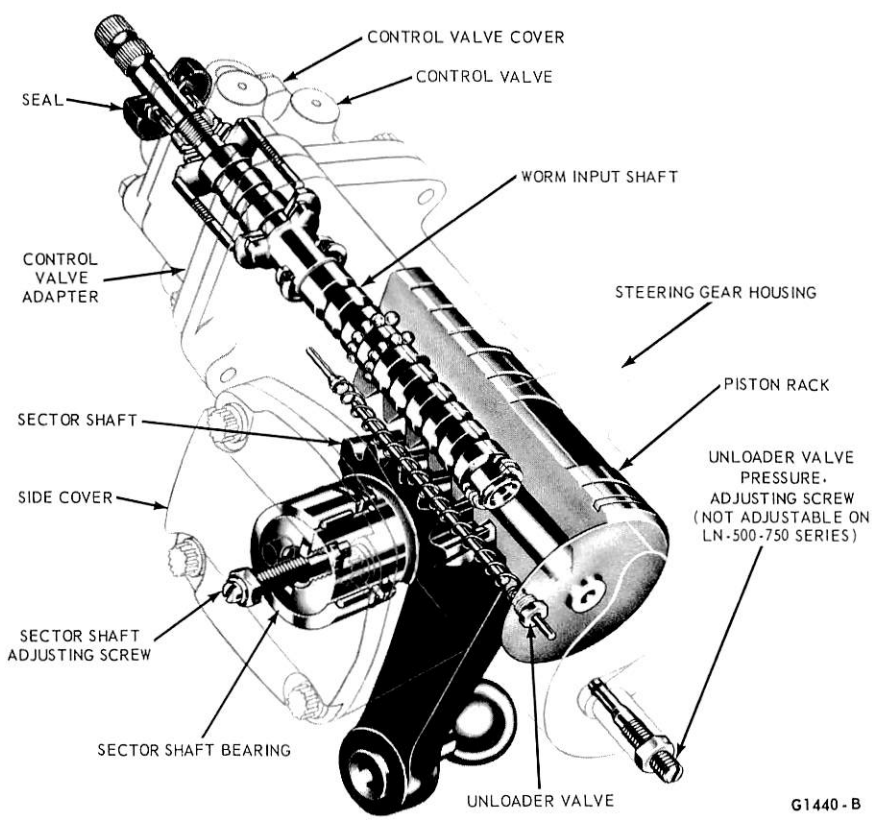

FIG. 1 Ross Integral Power Steering Gear — Model HF-54

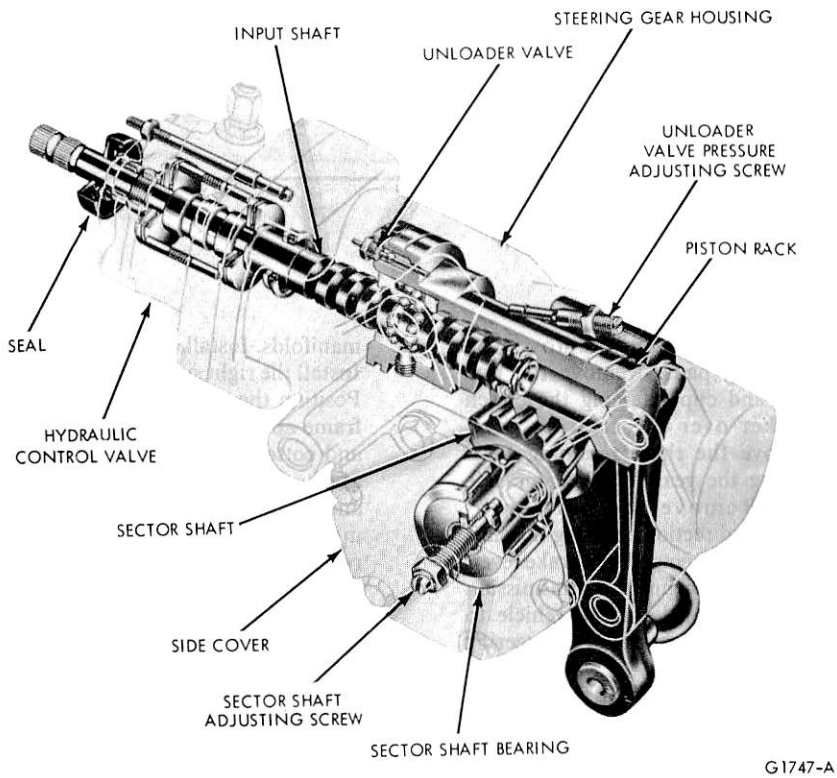

FIG. 2 Ross Integral Power Steering Gear — Model HF-64

ADJUSTMENTS

UNLOADER VALVE

This unloader valve adjustment is for **right turn only** on HF-54 Model gears and for **both turns** on HF-64 Model gears. Prior to performing the following procedure, obtain the vehicle's straight ahead position by driving the vehicle with hands off the steering wheel thus allowing the unit to find its own center. Now mark the steering column to steering wheel with chalk or masking tape.

1. Check the front wheel turning angles and adjust as required with the wheels off the ground (see the Specifications Section of Part 14-01).
2. Position the wheels straight ahead and lower the vehicle.
3. RIGHT TURN — HF-54 OR HF-64 GEARS: With the engine at idle, the vehicle standing still and the fluid at normal operating temperature, rotate the steering wheel to the right the prescribed number of turns (Specifications Section of this Part). Hold in this position (but not longer than 15 seconds).
4. Loosen the lock nut and turn the unloader valve pressure adjusting screw until an audible hiss is heard. Tighten the lock nut to specification.
5. Return the wheel to a straight ahead position while the vehicle is moving. With the vehicle standing still, again rotate the steering wheel the prescribed turns; then, check for the audible hiss. Readjust if necessary as in Step 4 and check once more as in this step.

It is important to remember that the HF-64 gear has a Pitman arm stop for the right turn cast on the gear housing. The Pitman arm **must not** contact this stop prior to contacting the unloader valve. When the hiss is heard during the adjustment, the clearance between the Pitman arm and the cast stop should be 1/16 to 1/8 inch minimum.

6. LEFT TURN — HF-64 GEAR ONLY: Repeat Steps 3, 4 and 5 while rotating the steering wheel to the left the prescribed number of turns (Specifications Section of this Part).

SECTOR SHAFT

1. Disconnect the drag link from the Pitman arm.
2. Center the steering wheel. Grasp the Pitman arm and check it for free movement (lash) between the sector shaft and the rack piston.
3. If free movement is noted (lash), remove the steering gear from the vehicle.
4. Loosen the sector shaft adjustment screw lock nut on the side cover.
5. After rotating the input shaft through its full travel for a minimum of five cycles, adjust the sector shaft adjusting screw to provide 15-20 in-lb torque as the input shaft is rotated 90 degrees each side of center.
6. Back out the adjusting screw one turn and note the torque required to move the input shaft 90 degrees each side of the center position. Move the adjusting screw in to provide an increase in torque of 2-4 in-lb at a point within 45 degrees each side of center after the adjusting screw jam nut is first tightened snug. Now torque to a final 20-25 ft-lb. The

input torque of the completely assembled gear, minus hydraulic oil, should not exceed 15 in-lb for the full travel of the output shaft.
7. Install the steering gear in the vehicle.
8. Connect the drag link to the Pitman arm.
9. Connect the pump lines and refill the system with the specified fluid.

REMOVAL AND INSTALLATION

STEERING GEAR

Removal
1. Position a drain pan under the steering gear.
2. Disconnect the power steering pressure line at the steering gear.
3. Disconnect the power steering return line at the steering gear.
4. Disconnect the turning hoses if so equipped.
5. Remove the bolt and nut (or castellated nut and cotter pin on some series) retaining the Pitman arm to the sector shaft and remove the Pitman arm from the sector shaft using Tool T64P-3590-F.
6. Remove the bolt, bolt and nut or castellated nut and cotter pin retaining the U-joint to the steering gear input shaft and slide the joint up off the input shaft.
7. On F-600-700-750, B-600-700-750 units with standard transmission only, loosen the front engine mount retaining nut and bolt. Remove the left and right side inlet pipe retaining bolts and the exhaust shield. Remove the clutch spring bracket retaining bolt and nut and remove the bracket from under the left side inlet pipe. Remove the two transmission mount retaining bolts and nuts. Position a floor jack under the transmission, raise the transmission and remove the mounting pads. Remove the two bolts and clip retaining the clutch bracket over the steering gear. Remove the three retaining bolts holding the gear to the frame side rail. Remove the portion of floorboard section covering the shift lever and the emergency brake lever. Position the engine and transmission to the right side of the vehicle to allow for the removal of the steering gear.
8. On other units, remove the bolts and nuts retaining the steering gear or the steering gear bracket to the frame side rail and remove the steering gear.

Installation
1. Position the gear (or gear and bracket) to the side rail. Install the bolts and nuts (and lock straps on some series) and torque to specification. Install the cotter pins (advance to next castellation if necessary after torquing to specification).
2. Position the intermediate shaft U-joint to the steering gear input shaft and install the bolt, bolt and nut or castellated nut and cotter pin to retain. Torque to specification.
3. On F-600-700-750, B-600-700-750 units only, position the exhaust inlet pipe to the right and left exhaust manifolds. Install the retaining nuts. Install the right side manifold shield. Position the clutch bracket to the frame and install the retaining bolts and cotter pin. Position the Pitman arm to the gear and install the bolt and retaining nut. Position the rear mounting pads and install the retaining bolts and nuts. After lowering and removing the jack, torque the mounting pad nuts to specification. Position the clutch spring bracket to the frame and install the retaining bolt, washer and nut. Connect the spring. Tighten the front engine mount retaining nut and bolt. Position the floor board over the gear shaft and emergency brake levers and install the retaining screws.
4. On other units, position the Pitman arm to the steering gear sector shaft, install the bolt and nut (castellated nut and cotter pin on some series) and torque to specification.
5. Connect the power steering return and pressure lines to the steering gear.
6. Connect the turning hoses if so equipped.
7. Fill the power steering system to the correct level with specified fluid.
8. Start the engine, cycle the system and check for fluid leaks.
9. Remove the drain pan.

DISASSEMBLY AND ASSEMBLY

STEERING GEAR

Disassembly
1. Rotate the input shaft (Figs. 3 and 4) so the index mark on the end of the sector shaft is perpendicular to the center-line of the gear (straight-ahead position).
2. Remove the four (six on Model HF-64) side cover attaching screws and washers.
3. Tap lightly on the end of the sector shaft with a soft hammer to disengage the side cover seal and allow the housing to drain.
4. Remove all nicks, burrs, rust and paint before removing the shaft. Lift the side cover and sector shaft from the housing as an assembly.
5. Remove the sector shaft seal adapter attaching screws and remove the adapter from the housing.
6. Remove the four screws that attach the control valve adapter to the housing.
7. Remove the control valve and rack piston from the housing as an assembly.
8. Remove the sector shaft adjustment screw lock nut (Figs. 3 and 4). Turn the adjustment clockwise until free of the side cover.
9. Remove the unloader valve retainer,

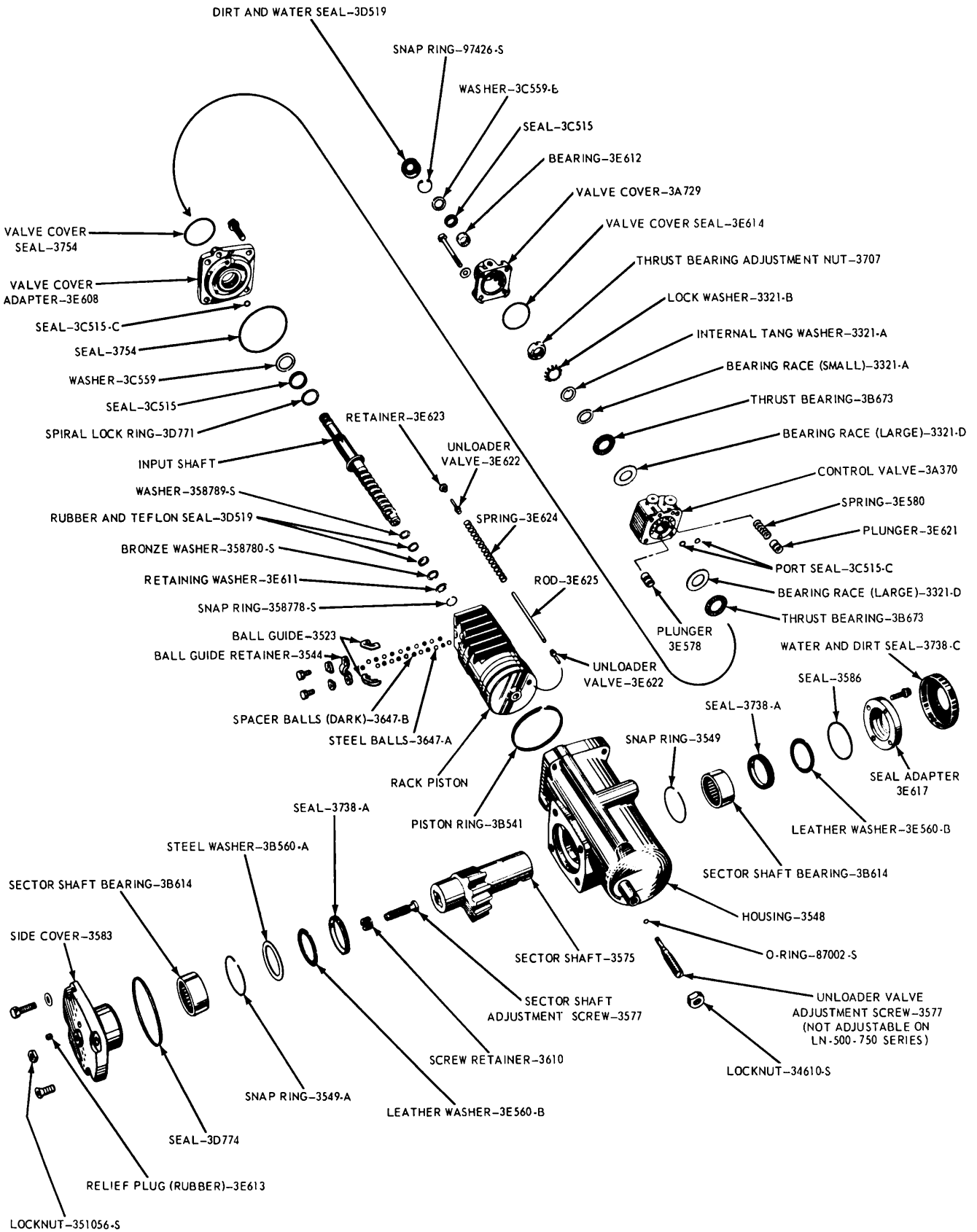

G1455-C

FIG. 3 Steering Gear Disassembled — Model HF-54

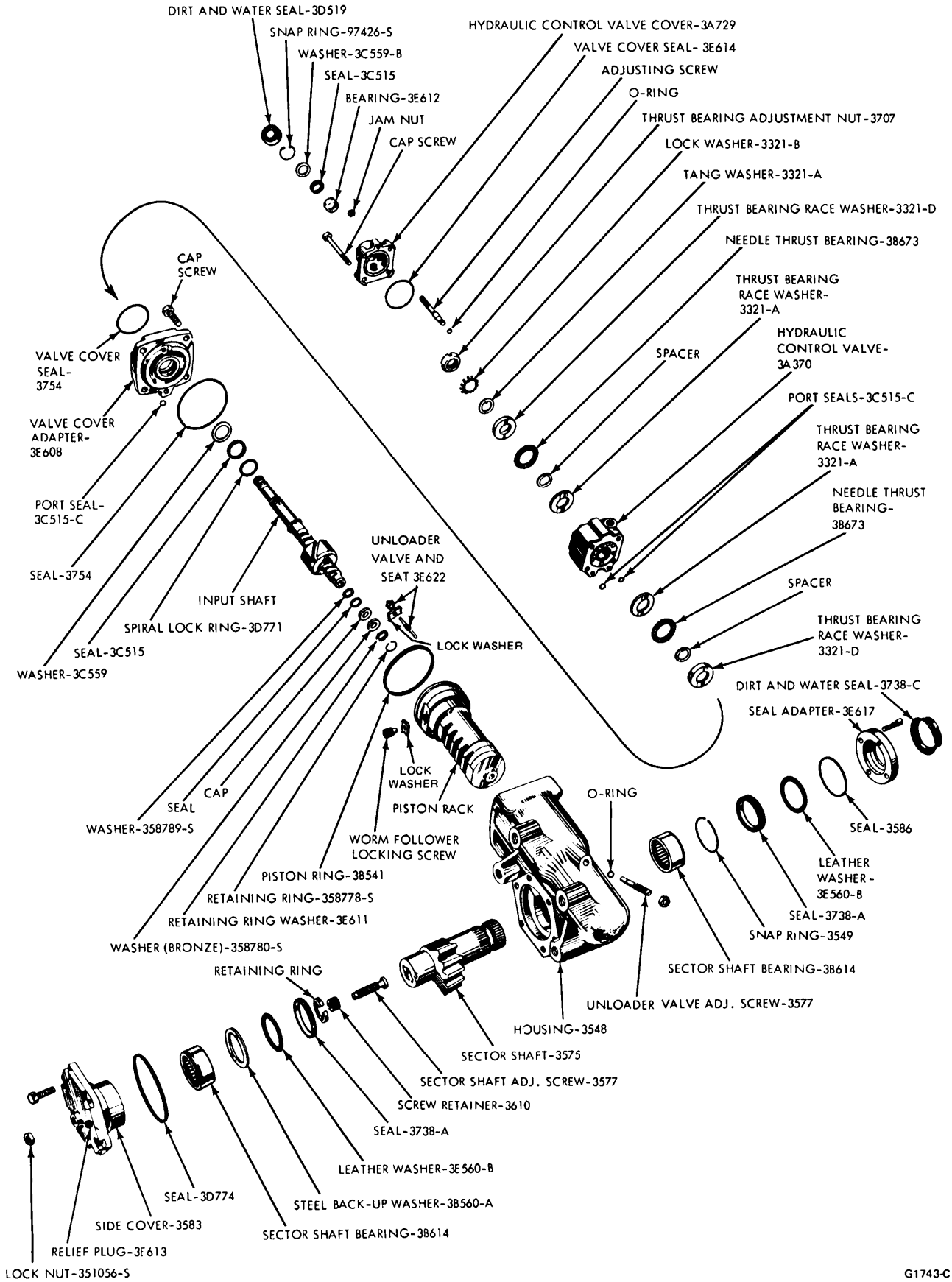

FIG. 4 Steering Gear Disassembled — Model HF-64

unloader valves, rod and the spring from the rack piston.

10. If all parts appear undamaged, do not disassemble the rack piston assembly. If there is evidence of damage, place the rack piston on a clean surface with the ball return guides facing upward. Remove the two ball return guide retainer attaching screws, lock washers, guide retainer, guide and balls. It may be necessary to tilt the rack piston over a clean pan and oscillate the worm shaft to empty the rack of all the balls. Lift the worm shaft from the rack after all the balls have been removed.
11. Carefully hold the input shaft in a vise equipped with soft jaws. Remove the snap ring, washer, bronze washer, cup, seal and washer (Fig. 5). It may be necessary to cut the teflon cup off the shaft.
12. Remove the valve cover dirt and water seal (Figs. 3 and 4).
13. Remove the four valve cover attaching screws. Lift the cover from the control valve.
14. Unstake the thrust bearing adjustment nut lock washer and remove the adjustment nut.
15. Remove the lock washer, internal tang washer, bearing race (small), thrust bearing and the large bearing race.
16. Lift the control valve and the control valve adapter from the input shaft.
17. Remove spiral lock ring, seal and washer from the counterbore of the valve cover adapter. Discard the washer and seal.
18. Do not disassemble the valve unless absolutely necessary. The valve is the control center of the hydraulic system. The major parts, which are the body and spool, are machined to very close tolerances and with precision machined edges. The spool and valve body are selectively fitted at the factory, and therefore these two parts are not separately replaceable. If either is damaged or excessively worn, the complete valve assembly should be replaced. Good performance of power steering is not assured if a mismatched valve spool and body are used. Care should be exercised in the handling of these parts to prevent damage. Sealing edges of the valve bore and the spool should not be broken.

This will result in excessive leakage and reduced hydraulic power.

If valve parts should drop out during gear disassembly, reassemble the valve as follows:

a. Clean all parts with a clean petroleum base solvent and blow dry with clean, dry air.
b. Insert the valve spool in the control valve making certain that the machined identification groove in the ID of one end of the spool is toward the **gear housing (Part No. 3548** on Figs. 3 and 4).
c. There are 7 sets of plungers, each set having one reaction spring. Insert the 6 **solid** centering plunger sets first along with one spring per set (Check Valve Plunger Assembly on Fig. 6) should be inserted in the valve body with the small hole on each plunger facing outboard.

CLEANING AND INSPECTION

1. All parts should be cleaned in a clean petroleum base solvent and blown dry with clean dry air. Avoid wiping parts with a cloth, since lint may cause binding and sticking of closely fitted components.
2. Inspect the worm grooves in the rack piston and on the input shaft for wear scores. Inspect the OD of the rack piston and the ring or teeth for wear or scores. On the HF-64 gear, the ball nut and input shaft are serviced as a matched assembly. Therefore, both must be replaced if either are worn or damaged. The rack piston is not matched.
3. Inspect the inside ends of the ball return guides for wear or damage.
4. Inspect the housing bore for wear or scores or being cracked and replace as required.
5. Inspect the sector shaft teeth for wear or the bearing surfaces for wear or scores.
6. Replace the sector shaft bearings if worn or damaged. **Note the sector shaft bearing in the side cover is replaced as part of the side cover assembly.**
7. Replace all seals at time of disassembly.

Assembly

1. Lubricate all rubber parts prior to assembly.
2. If the sector shaft bearing was removed from the steering gear housing, install the snap ring in the outboard side of the housing (HF-54 gear only) (Fig. 3).
3. Place the steering gear housing in a press with the side cover area on a wood block to prevent damage to the machined area.
4. Position the bearing on the housing with the numbered end facing up. Carefully press the bearing into the housing until the outer surface is flush. Use a tool that pilots in the ID of the bearing and contacts the bearing end surface.
5. Coat the unloader valve pressure adjusting screw O-ring liberally with clean grease or oil. Carefully slide it into the groove on the non-threaded end of the adjusting screw.
6. Thread the adjusting screw into the lower end of the housing leaving 7/8 inch of the screw exposed. Install the lock nut on the adjusting screw and tighten it securely.
7. Carefully secure the input shaft in a vise equipped with soft jaws to permit access to both ends of the shaft.
8. On HF-54 gears, slide the bearing race (large) thrust bearing, control valve (with cylinder ports toward the shoulder), bearing race (small), internal tang washer, lock washer and thrust bearing adjustment nut (Fig. 3).

On HF-64 gears, slide the thrust bearing race washer, spacer, control valve (with cylinder ports toward the shoulder) needle thrust bearing, thrust bearing race washer, tang washer, lock washer and thrust bearing adjustment nut (Fig. 4).

9. Tighten the adjustment nut to 20 ft-lbs, then back it off 1/2-1 lock washer tangs. Bend one tang of the lock washer into the slot provided on the adjustment nut. When adjusted in this manner, the control valve should rotate freely on the shaft with a torque of 2-3 1/2 in-lbs and have no perceptible end play.
10. Assemble a new washer, seal and the spiral lock ring in the counterbore of the valve cover adapter. Make sure that the lip of seal is facing toward the spiral lock ring (Fig. 5).
11. Coat a new valve cover seal and two new cylinder port seals with grease to retain them in place. Position the seals in the recesses provided in the control valve cover adapter (Figs. 3 and 4) on the surface adjacent to the control valve.
12. Reposition the input shaft in the vise securing the serrated end.
13. Slip the adapter over the worm groove end of the input shaft. Align the cylinder port seals with the ports in the control valve. Install one of the attaching bolts finger tight to facilitate assembly.
14. Assemble the washer (steel), a new rubber seal, new teflon cup with the lip toward the seal, bronze washer and retaining washer. Compress the washer and seal, then install the snap ring on the end of the input shaft. Make sure that the snap ring

is fully seated in the groove and the recessed area of the retaining washer.

15. Secure the rack piston in a soft-jawed vise with the ball guide holes facing upward.
16. Carefully expand the piston ring and install it in the piston groove.
17. On HF-54 gears, clean the threads on both unloader valves and place the valves, the spring and rod in the rack piston as shown in Fig. 5. Apply a drop of Lock-tite Type A to the threads of the retainer. Install and torque the retainer to specification.

On HF-64 gears, clean the threads on the unloader valve and insert it into the rack piston. Clean the threads on the seat and apply Lock-tite. Assemble the seat with a new lock washer and tighten to specification. Bend the lock washer against one flat of a hex on the seat.

18. Coat the input shaft seal at the end of worm with grease and place it in the rack piston bore.
19. Assemble sixteen balls while rotating the input shaft counterclockwise. The black spacer balls and the polished steel balls must be installed alternately. Coat the ball return guides with grease to retain the balls, then install the six remaining balls in the guides making sure that the balls in the guide alternate with the last balls installed in the rack piston. **If a ball is lost, no more than three black spacer balls may be used for replacement.** Secure the guide retaining clip to the rack piston with two screws and washers. Torque the screws to specification and bend the tab of the locking washer against the flat.
20. Grip the serrated end of the sector shaft in a soft-jawed vise.
21. Coat the head of the sector shaft adjusting screw with C2AZ-19585-A grease. Position the head of adjusting screw into the slot in the end of sector shaft.
22. Install a new sector shaft adjustment screw retainer in the end of shaft. Tighten the retainer to permit free rotation of screw without perceptible end play. Stake the retainer in the two slots provided and recheck the rotation effort.
23. If the pressure relief plug has been removed or ruptured, press a new one into the side cover until it is flush with the surface.
24. Assemble the snap ring (HF-64 gear only), steel washer (with taper toward the snap ring), leather washer and the two piece seal into the side cover. The seal has Oil Side molded into one side and must be visible after installation.
25. Coat the end of sector shaft with lubricant. Rotate the sector shaft adjusting screw counterclockwise to thread it into the side cover. Rotate the screw until a firm stop is reached. On HF-54 gears, make sure that the shaft seal has not falled out of position.
26. Place the outer seal (Figs. 3 and 4) in the seal adapter. Then install the leather washer and inner seal making sure that the side having the mold **Oil Side** is visible after installation.
27. If the input shaft needle bearing has been removed from the control valve cover it must be installed with a tool that will pilot in the bearing and have clearance in the cover bore. The bearing must be pressed from the part number end, and to a depth of 1 1/8 inches from the face of the valve cover. After installation of the bearing, make sure that all rollers rotate freely.
28. Install the seal on the control valve cover with the lip facing toward the needle bearing. Coat the washer with grease and install it on the cover. Install the snap ring to secure the seal and washer.
29. Pack the new dirt and water seal with C2AZ-19585-A grease and install it on the control valve cover (Figs. 3 and 4).
30. Secure the steering gear housing in a vise equipped with soft-jaws.
31. Lubricate the steering gear housing bore. Start the rack piston into the bore, then compress the ring and move the piston into position so that the teeth are visible through the side cover opening. Install the four adapter-to-housing attaching bolts. Remove the one bolt that was previously installed.
32. Lubricate a new valve cover seal (Fig. 2) with grease and position it in the recess of the valve cover.
33. Slide the valve cover onto the input shaft and install the four cover-to-control valve attaching bolts.
34. Rotate the input shaft as required to align the center tooth of the rack piston (marked tooth) with the side cover opening.
35. Lubricate a new side cover O-ring and position it on the side cover.
36. Position the sector shaft and side cover to the steering gear housing making sure that the center tooth (marked tooth) engages the center space (marked space).
37. Install the four side cover attaching bolts and lock washers. Torque the bolts to specification.
38. Adjust sector shaft adjustment screw as outlined in the Sector Shaft Adjustment, Adjustments section of this Part.
39. Cover the sector shaft serrations with a layer of scotch tape to prevent damage to the seal in the adapter.
40. Position the adapter over the sector shaft and on the housing. Install and tighten the attaching bolts to specification.
41. Pack the seal adapter outer seal with C2AZ-19585-A, then install it on the adapter to prevent water entry.

FINAL CHECKS

1. After rotating the input shaft through its full travel for a minimum of five cycles, recheck the sector shaft adjustment. No rotational lash or bind of the sector shaft in center position is permissible.
2. If the gear is properly assembled and adjusted, the input torque of the empty gear should not exceed 15 in-lbs over full travel of 95 degrees at the output shaft.
3. Reverse-torque applied to output shaft for full gear travel should not exceed 50 ft-lbs.

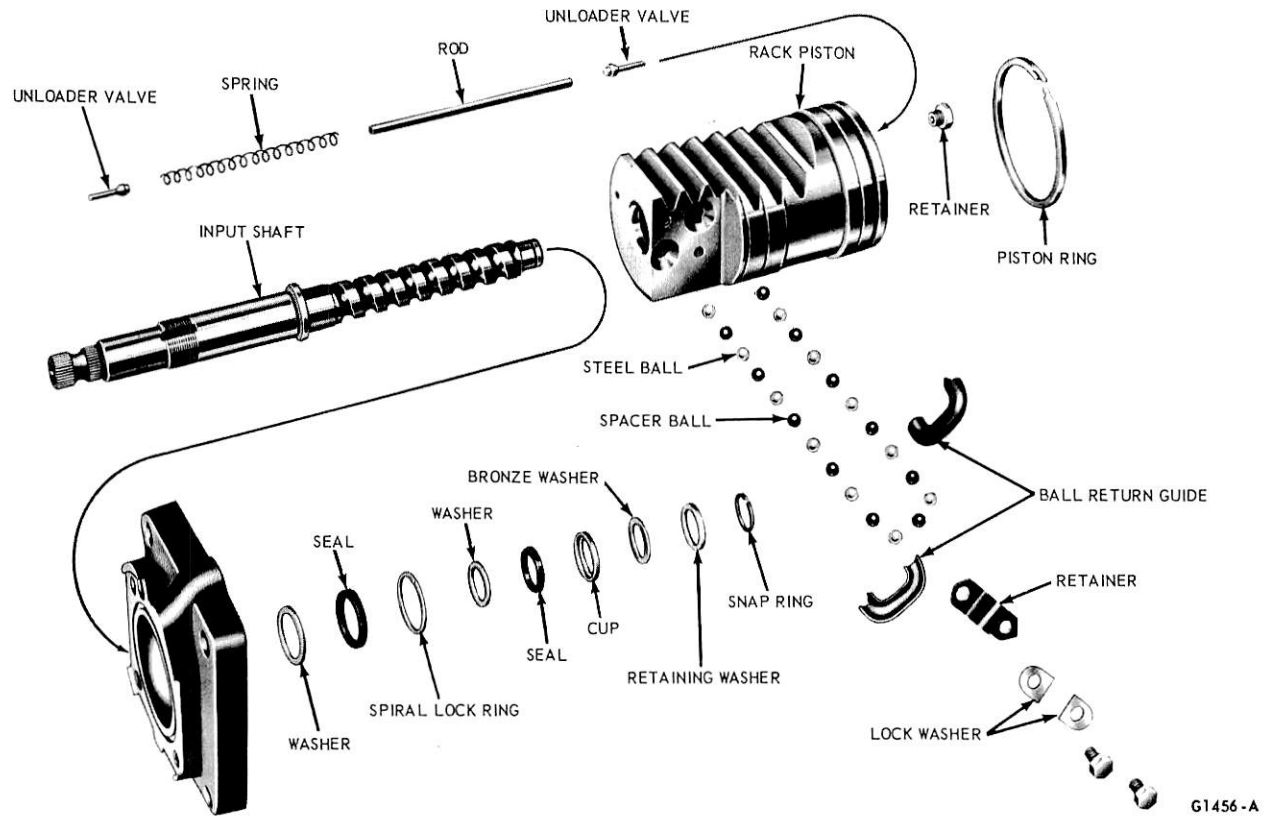

FIG. 5 Input Shaft Seals and Retainers Disassembled—Model HF-54 (Model HF-64 Similar)

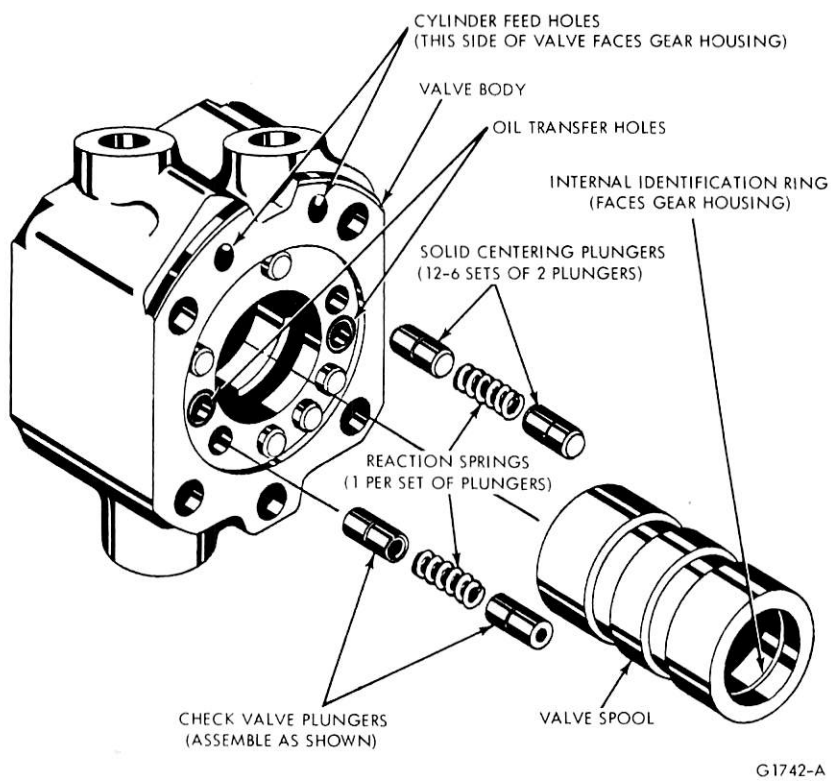

FIG. 6 Correct Hydraulic Control Valve Assembly

SPECIFICATIONS

ROSS INTEGRAL POWER STEERING GEARS–TORQUE LIMITS (FT-LB) AND SERVICE SPECIFICATIONS

Description	Model 54	Model 64
Sector Shaft Adj. Screw Lock Nut	20–25	20–25
Pressure Unloader Valve Adj. Screw Lock Nut	17–22	Upper15-20Lower20-25
Unloader Valve Retainer	20–25	10–15
Seal Adapter Attaching Screw	13–23	13–23
Side Cover Attaching Screw	45–55	150–170
Valve Cover Attaching Screw	25–35	25–35
Control Valve Adapter Attaching Screw	45–55	70–80
Ratio	19:1	23.4:1
Lubricant (Gear)	C1AZ-19582-A	
Ball Nut Retaining Screw		30-35

SPECIAL SERVICE TOOLS

Tool No.	Description
T64P-3590-F	Steering Pitman Arm Remover
T56L-33610-D	Pressure Gauge

STEERING WHEEL TURN SPECIFICATIONS

Gear Identification	Truck Model Application	Right Turn Steering Wheel From Center	Left Turn Steering Wheel From Center
HF-64 – 2 Port	L-LT-LTS-LN-LNT-800–900–8000–9000 with 6–7–9–12000 lb. Axles	1-1/2	1-3/4
HF-64 – 4 Port	L-LT-LTS-LN-LNT-800–900–8000–9000 with 16–18– 20000 lb. Axles	1-1/4	1-3/4
HF-54 – 4 Port	F-750-7000 with 9000 lb. Axle	1-3/4	–
HF-54 – 2 Port	F-B-500–750–6000–7000 with 5–5.5–6–7000 lb. Axles	1-3/4	—
LN–500–750–6000-7000 models are non-adjustable			

CG 1892-B

PART 13-50 Power Steering Pump-Ford-Thompson

Applies To F-100, 250, 350 (4 x 2), Econoline, Bronco Vehicles Only

COMPONENT INDEX	Page	COMPONENT INDEX	Page
PUMP DRIVE BELT		POWER STEERING PUMP PULLEY	
Adjustment	50-02	Removal and Installation	50-05
Removal and Installation	50-03	POWER STEERING PUMP RESERVOIR	
POWER STEERING PUMP		Removal and Installation	50-05
Cleaning and Inspection (See Part 13-01)		ROTOR SHAFT SEAL	
Description	50-01	Removal and Installation	50-04
Disassembly and Assembly	50-08		
Removal and Installation	50-03	SPECIFICATIONS	50-10

DESCRIPTION

POWER STEERING PUMP

The Ford-Thompson power steering pump is a belt driven slipper type pump which is integral with the reservoir (Fig. 1). It is constructed so that the reservoir is attached to the rear side of the pump housing front plate and the pump body is encased within the reservoir (Fig. 2).

An identification tag is located behind the outlet fitting nut. Figure 3 shows typical tags. The top line on the tag indicates the basic model number (HBA) and the suffix. It is important that the codes on the tag are checked when requesting service parts as there may be slight differences in internal components.

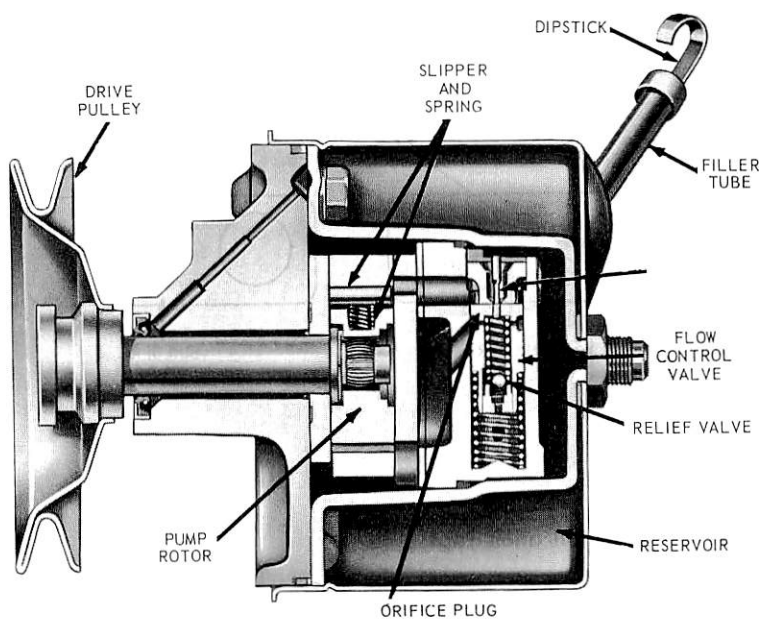

FIG. 1 Power Steering Pump — Sectional View

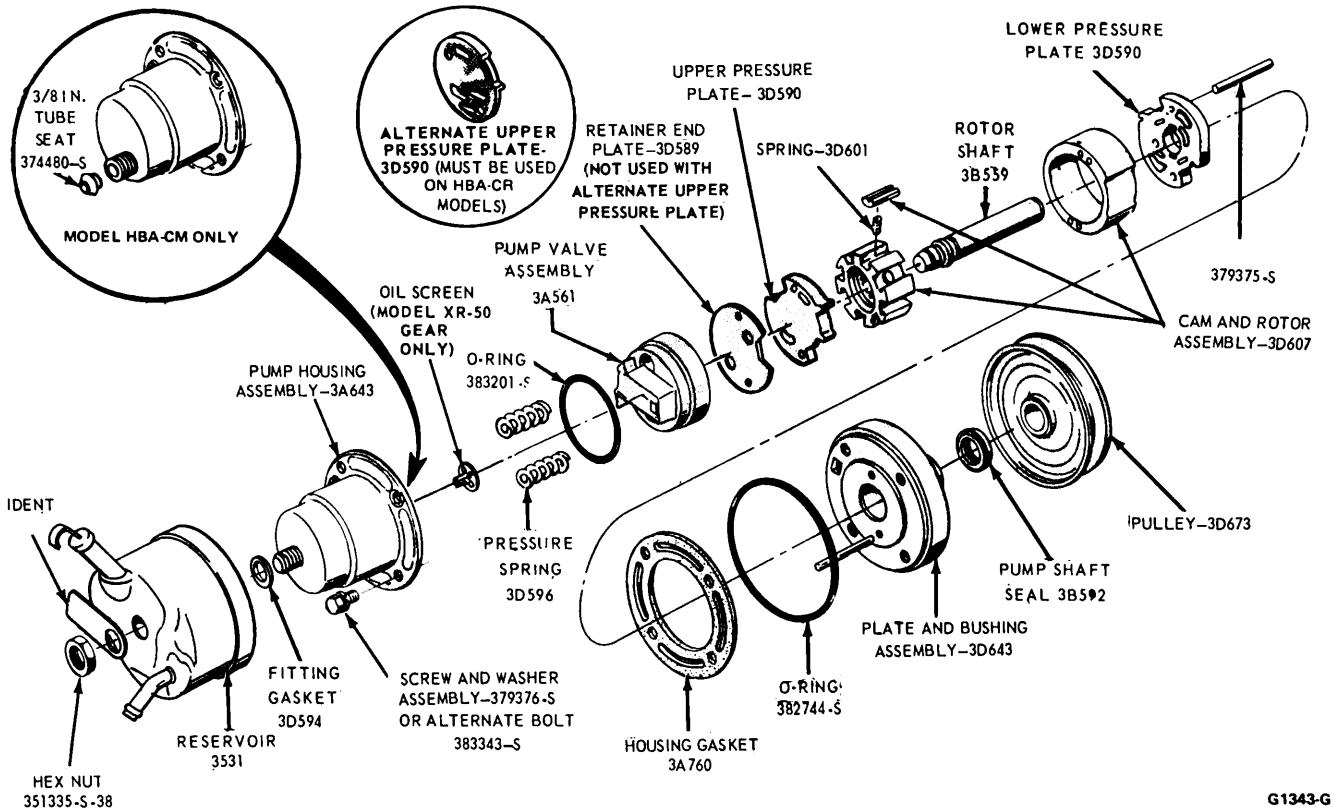

FIG. 2 Power Steering Pump—Disassembled

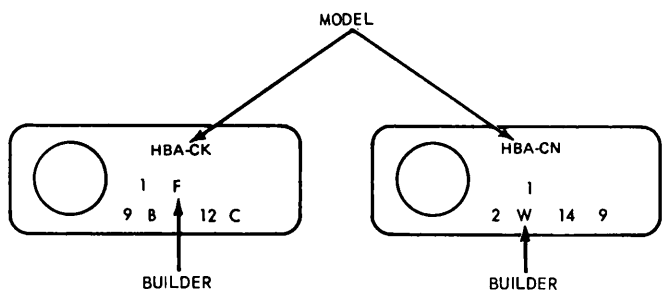

FIG. 3 Pump Identification Tags

ADJUSTMENTS

PUMP BELT TENSION ADJUSTMENT

Pump drive belt tension cannot be checked accurately using the thumb pressure or belt deflection methods. Correct belt adjustment is assured only with the use of a belt tension gauge.

1. Check the belt tension with a belt tension gauge Tool T63L-8620-A. With a new belt, or one that has been run for less than 15 minutes, the tension should be within 120-150 lbs. With a belt that has been run for more than 15 minutes, the tension should be within 90-120 lbs.
2. To adjust the belt, loosen the three screws on the pump adjusting bracket. On F-100-350, Bronco vehicles, apply leverage at the web on the hub side of the pump. On

Econoline vehicles, use Tool T71P-3D643-B from under the unit to apply leverage.

Do not pry against the reservoir to obtain proper belt load as it can be deformed and cause a leak.

3. Recheck the belt tension. When the tension has been correctly adjusted, tighten the bolts and the nut to specification.

POWER STEERING PUMP DRIVE BELT REPLACEMENT

1. Loosen the idler pulley attaching bolts and remove the compressor drive belt if equipped with an air conditioner.
2. Loosen 3 bolts and one nut attaching the power steering pump to the pump bracket, and remove the pump drive belt.
3. Position the power steering pump drive belt on the pulleys.
4. Adjust the drive belt tension as outlined in this section to specification and tighten the pump attaching bolts and one nut to specification.
5. Install the compressor drive belt if equipped with an air conditioner and adjust to specification (Group 36).

REMOVAL AND INSTALLATION

POWER STEERING PUMP

F-100-350

Removal

1. Loosen the pivot bolt (top) and the two adjustment bolts (lower) and remove the drive belt.
2. Disconnect the pressure and the fluid return hose from the rear of the pump.
3. Remove the pivot bolt and the two adjustment bolts that secure the pump to the bracket and remove the pump.

Installation

1. Position the pump to the bracket and install but do not tighten the two adjustment bolts and one pivot bolt.
2. Connect the pressure hose and the fluid return hose to the fittings at the rear of the pump (Fig. 4).
3. Place the drive belt on the crankshaft pulley and the pump pulley.
4. Place a wrench on the adjustment web and apply leverage to obtain the specified belt tension using Tool T63L-8620-A and tighten the adjustment bolts and pivot bolt to specification.
5. Fill the system with the proper fluid to the fill mark on the dipstick.
6. Start the engine and turn the wheels from stop-to-stop to bleed air from the system and check for fluid leaks. **Do not hold the wheels against the stops. Check the fluid level in the reservoir and add fluid D2AZ-19582-A if necessary.**

START-UP PROCEDURE (AFTER POWER STEERING PUMP OVERHAUL)

Upon initial engine start-up after a power steering pump overhaul, there is very frequently much noise and aeration. This is due to air trapped in the overhauled unit which mixes with the surging fluid and causes aeration. The problem can be minimized if the following procedure is used.

1. Disconnect the coil wire.
2. Fill the reservoir.
3. Crank the engine with the starter and continue adding fluid until the level remains constant.
4. Rotate the steering wheel approximately 30 degrees each side of center while continuing to crank the engine.
5. Recheck the fluid level and fill as required.
6. Reconnect the coil wire.
7. Start the engine and allow it to run for several minutes.
8. Rotate the steering wheel from stop to stop.
9. Shut off the engine and recheck the fluid level — add as required.

ECONOLINE

Removal

1. Raise the vehicle on a hoist.
2. Place a drain pan beneath the vehicle and disconnect the return and pressure lines at the pump. Lower 6 cylinder vehicles.
3. Loosen the power steering pump retaining bolts and position the drive belt out of the way.
4. Disconnect the reservoir hose from the pump.
5. On 6 cylinder vehicles: Remove the 4 nuts retaining the pump bracket to the cylinder block (Fig. 5). Remove the pump and bracket from under the vehicle.

On 8 cylinder vehicles: Remove the 3 bolts retaining the pump to the mounting bracket and lay the pump on the crossmember. Loosen mounting bracket retaining bolts and nuts allowing the bracket to move forward and remove the pump from the vehicle.

Installation

1. On 6 cylinder vehicles: Install the pump bracket to the pump with the 4 retaining bolts. Position the pump and bracket assembly (including spacers) on to the cylinder block mounting studs and install the 4 retaining nuts.

On 8 cylinder vehicles: While holding the pump bracket forward, place the pump into the chassis and tighten the bolts and nuts retaining the bracket to the engine. Position the pump to the bracket and install the 3 retaining bolts.

2. Connect the reservoir hose to the pump.
3. Raise 6 cylinder vehicles. Connect the pressure and return lines to the pump.
4. Reposition the drive belt to its pulleys. Adjust the drive belt tension and tighten the retaining bolts.
5. Lower the vehicle.
6. Fill the power steering system, cycle and check for leaks.

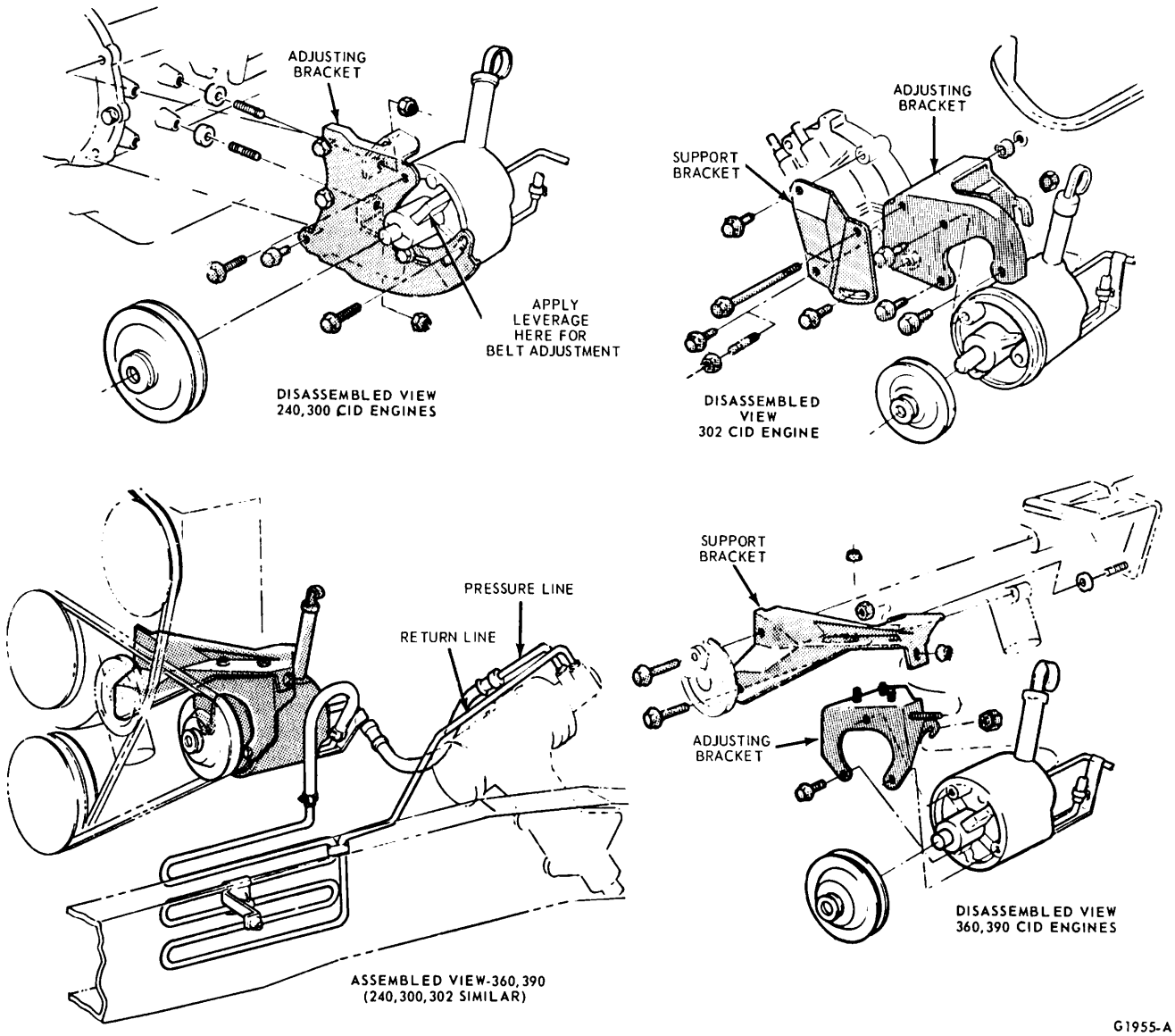

FIG. 4 Power Steering Pump Installation—F-100-350

Refer to Start-Up Procedure at the end of the first Removal and Installation procedure.

BRONCO

Removal

1. Position a drain pan under the power steering pump.
2. Disconnect the pressure and return lines at the pump. Disconnect the cooler hoses over the pump (Fig. 6).
3. Loosen the 1 pivot bolt and 1 adjustment bolt. Remove the drive belt.
4. Remove the 2 water pump bolts from the adjusting bracket attached to the front cover.
5. While holding the pump, use a jam nut and remove the through bolt from the cylinder head. Remove the pump with both brackets from the vehicle.

Installation

1. If installing a new pump, transfer the pump support bracket to the new unit.
2. Insert the through bolt from the rear of the pump bracket. Install the pump in the vehicle without the adjusting bracket, inserting the throught bolt into the block.
3. Position the adjusting bracket to the water pump and torque the 2 retaining bolts to specification (11-16 ft-lb.)
4. Install the bolt. Install and torque the bolts retaining the support bracket to the pump and block (30-40 ft-lb.) Check the belt tension.
5. Connect the cooler hoses over the pump (10-18 in-lb clamp torque). Connect pressure and return lines to the pump.
6. Fill the power steering system, cycle and check for leaks.
7. Remove the drain pan.

Refer to Start-Up Procedure at the end of the first Removal and Installation procedure.

ROTOR SHAFT SEAL

Removal

1. Remove the pulley from the rotor shaft as described under Power Steering Pump Pulley Removal.
2. Position the pump assembly in the bench mounted holding fixture, T57L-500-A or on the assembled adapter plate, T69P-3A674-A, pulley end of the shaft up.
3. Clean any rust or road dirt from the pulley end of the rotor shaft.
4. To prevent scoring of the shaft, wrap .005 shim stock (free of burrs) around the rotor shaft and push it

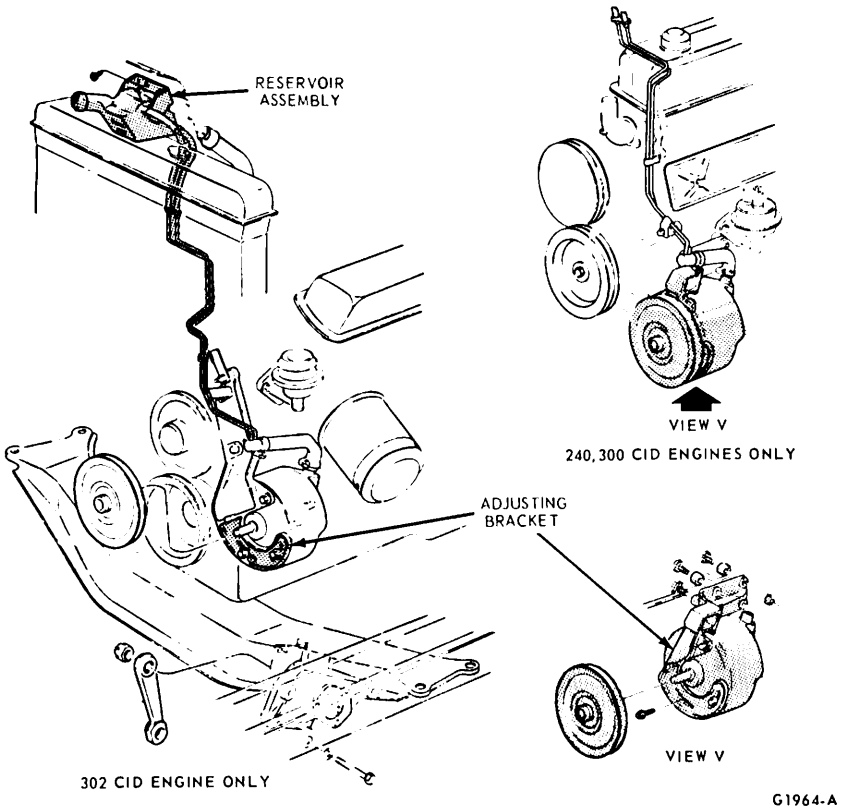

FIG. 5 Power Steering Pump Installation—Econoline

into the ID of the seal until it is against the bushing.

5. Using a sharp tool such as a sheet metal punch, carefully pierce the metal seal body face and pry the old seal out (Fig. 7). **Do not damage the bushing, the housing or the rotor shaft.**

Installation

1. Remove the shim stock.
2. Position the new rotor shaft seal on the shaft seal protector, Tool T68P-3B592-B.
3. Insert the seal protector tool and the rotor shaft seal onto the shaft (Fig. 8).
4. Using the seal installation Tool T68P-3B592-A and a rubber or plastic hammer, tap gently on the end of the tool until the seal is completely installed (flush with the end of the seal bore).
5. Remove the tools.
6. Install the pulley on the rotor shaft as described under Power Steering Pump Pulley Installation.

POWER STEERING PUMP PULLEY

Removal

1. Drain as much of the fluid as possible from the pump through the filler pipe.
2. Install a 3/8-16 inch capscrew in the end of the pump shaft to prevent damage to the shaft end by the tool screw.
3. Install the pulley remover, Tool T69L-10300-A, on pulley hub, and place the tool and pump in a vise as shown in Fig. 9.
4. Hold the pump and rotate the tool nut counterclockwise to remove the pulley (Fig. 9). **The pulley must be removed without in and out pressure on the pump shaft to prevent damage to internal thrust areas.**

Installation

1. Position the pulley to the pump shaft and install Tool T65P-3A733-A as shown in Fig. 10.
2. Hold the pump and rotate the tool nut clockwise to install the pulley on the shaft. The pulley face will be flush with end of pump shaft. **Install the pulley without in and out pressure on the shaft to prevent damage to internal thrust areas.**
3. Remove the tool.

POWER STEERING PUMP RESERVOIR

Reservoir replacement must be done on a clean workbench. Cleanliness of work area and tools is extremely important when repairing any hydraulic unit. Thoroughly clean the exterior of the pump with a suitable cleaning solvent. **Do not clean, wash or soak the shaft oil seal in solvent. Plug the inlet and outlet opening with plugs or masking tape before cleaning the pump exterior or removing the reservoir.**

Removal

1. Assemble the adapter plate (Tool T69P-3A674-A) to the bench mounted fixture tool (T57L-500-A). Position the pump and pulley on the adapter plate, pulley facing down.
2. Remove the outlet fitting hex nut and the service identification tag.
3. Invert the pump so the pulley is facing up and remove the reservoir by tapping around the flange with a wood block (Fig. 11).
4. Remove the reservoir O-ring seal and the outlet fitting gasket from the pump.

Installation

1. Install a new gasket on the outlet fitting and a new reservoir O-ring seal on the pump housing plate (Fig. 12).**The old gasket and seal should never be re-used.**
2. Apply vaseline to the reservoir O-ring seal and to the inside edge of the new reservoir flange. **Do not twist the O-ring seal.**
3. Position the reservoir over the pump and align the notch in the reservoir flange with the notch in the outer diameter of the plate and bushing assembly.
4. Install the reservoir on the pump and O-ring seal with a plastic or rubber hammer and a block of wood as shown in Fig. 13.**Tap at the rear of the reservoir and on the outer edges only.**
5. Inspect the assembly to be sure the reservoir is evenly seated on the pump housing plate.
6. Position the service identification tag on the outlet fitting and install the outlet fitting hex nut. Torque the nut to specification. **Do not exceed specification.**

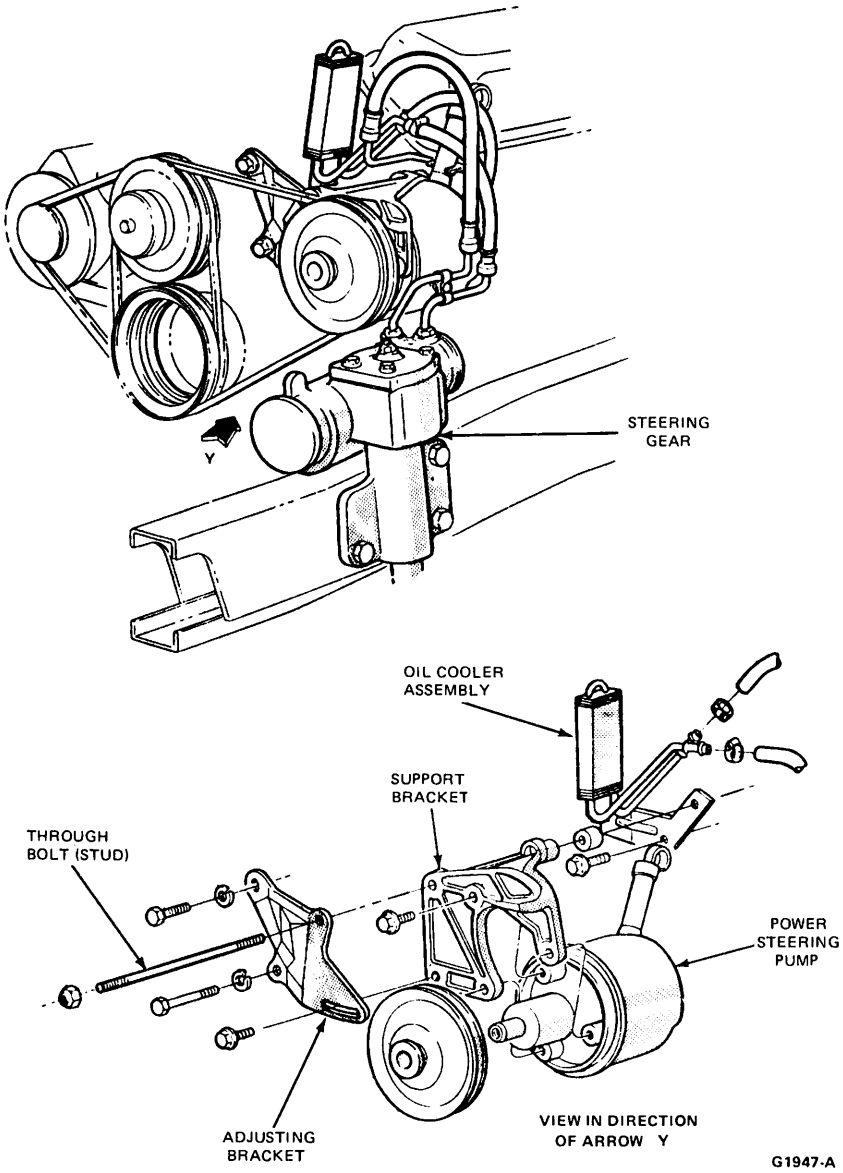

FIG. 6 Power Steering Pump Installation—Bronco

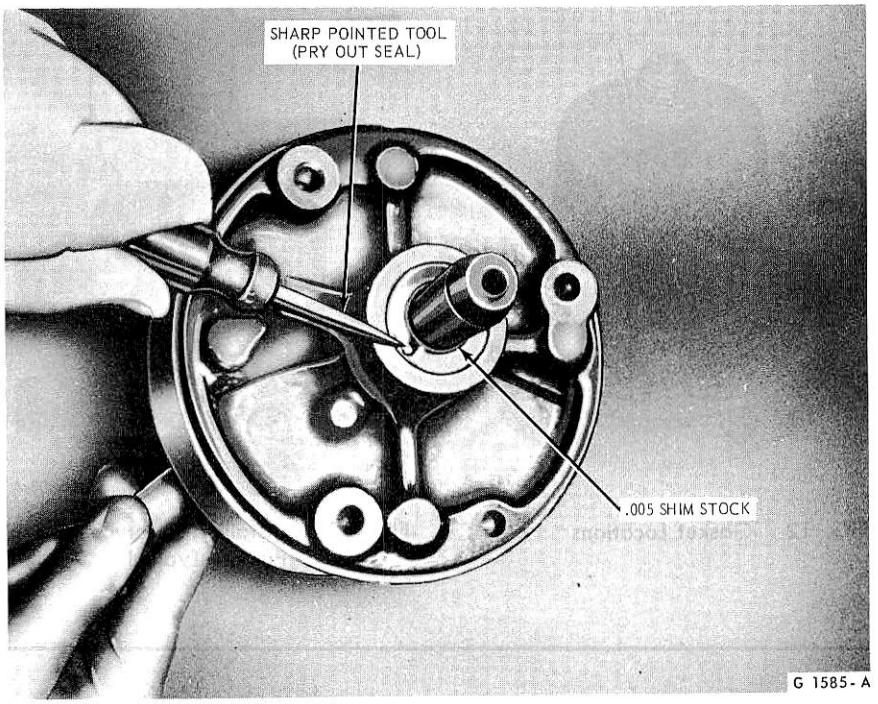

FIG. 7 Rotor Shaft seal Removal

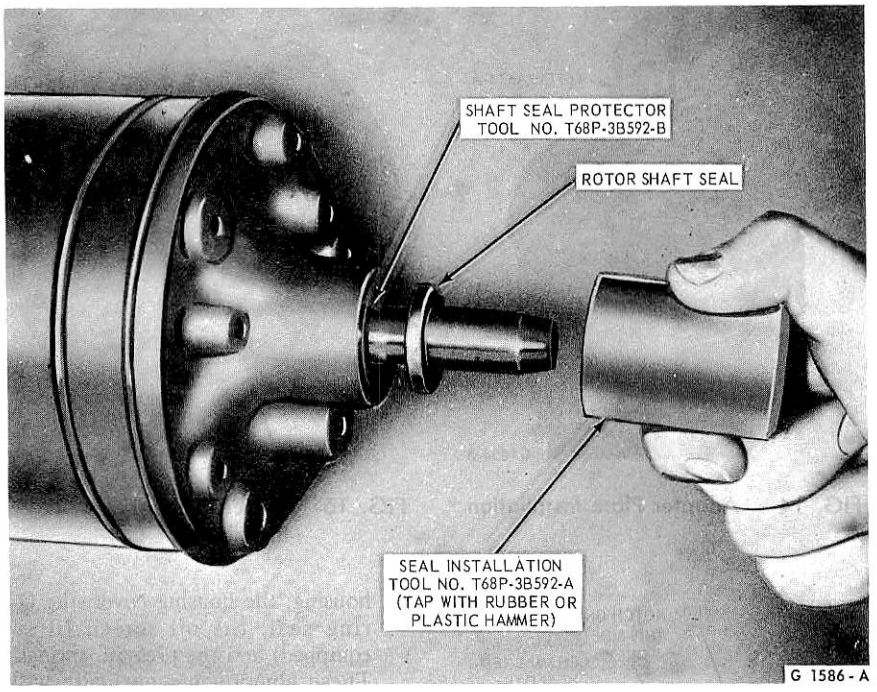

FIG. 8 Rotor Shaft Seal Installation

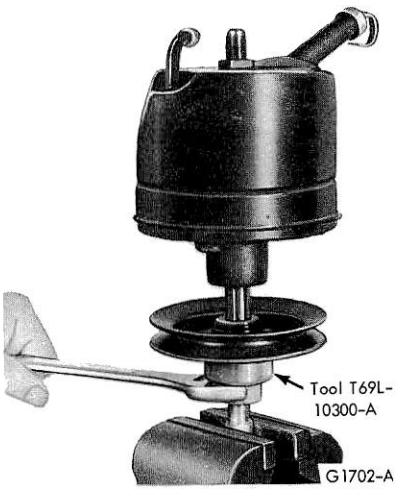

FIG. 9 Removing Power Steering Pump Pulley

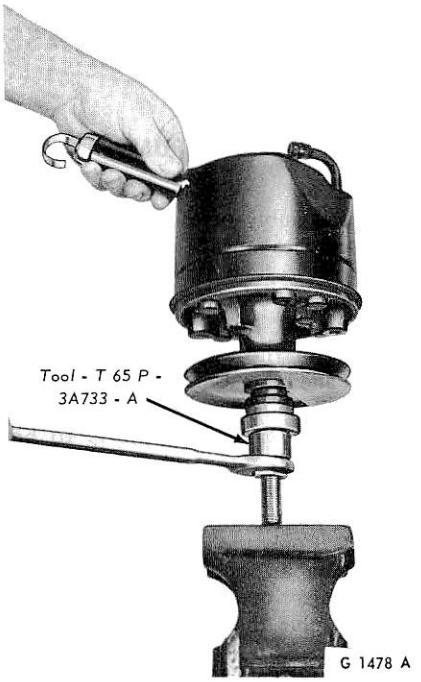

FIG. 10 Installing Power Steering Pump Pulley

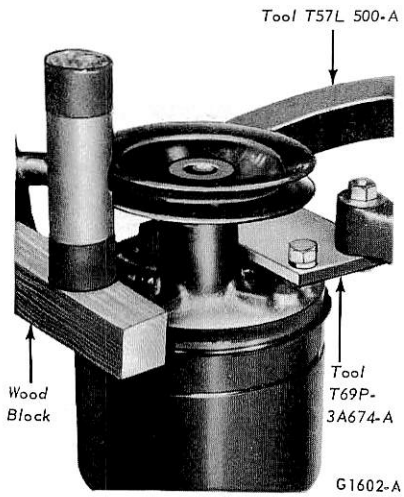

FIG. 11 Removing Pump Reservoir

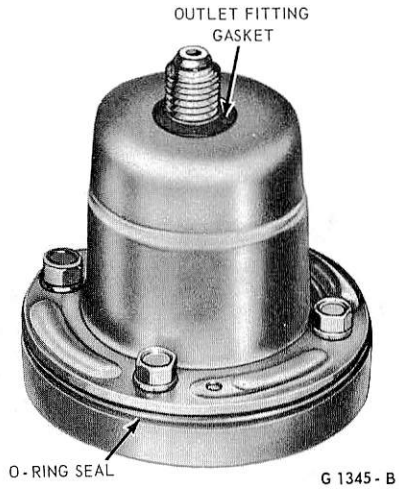

FIG. 12 Gasket Locations

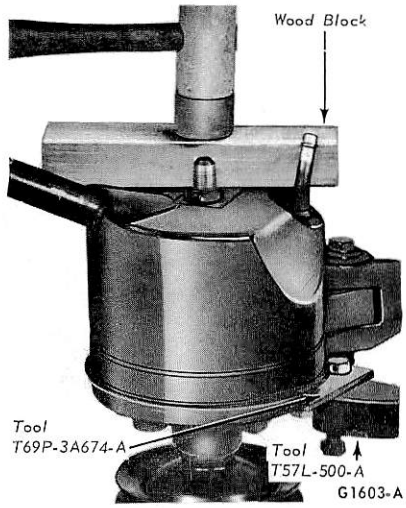

FIG. 13 Installing Reservoir on Pump—Typical

DISASSEMBLY AND ASSEMBLY

POWER STEERING PUMP

Disassembly

Disassembly of the pump and its subassemblies must be made on a clean work bench. In repairing any hydraulically operated unit, cleanliness is of utmost importance. Clean the exterior of the unit with a suitable solvent and drain as much of the fluid as possible.

If only the reservoir is to be removed, plug the inlet and outlet openings with masking tape or plugs. Do not immerse the shaft oil seal in solvent. If only the rotor shaft seal is to be replaced, see Rotor Shaft Seal Replacement outlined in this section.

1. Assemble the adapter plate (Tool T69P-3A674-A) to the bench mounted holding fixture Tool T57L-500-A (Fig. 14).
2. Position the pump assembly, with pulley assembled, on the adapter plate, pulley facing down.
3. Remove the outlet fitting nut and the service identification tag.
4. Invert the pump assembly and, using a block of wood and a rubber or plastic hammer, remove the pump reservoir and seal by tapping around the flange of the reservoir and on the underside of the filler neck.
5. Again invert the pump assembly, loosen and remove the pump housing retention bolts and remove the pump housing.
6. If necessary, remove the following components from the pump housing: the housing cover, the O-ring seal, the oil screen (if so equipped) and the pressure springs. These components normally will remain in the pump housing when it is removed.
7. Remove and discard the pump cover gasket.
8. Remove the retainer end plate and upper pressure plate (in some pumps, the end plate and upper pressure plate are integral).
9. Remove the loose fitting dowel pin. be careful not to bend the fixed dowel pin which remains in the housing plate assembly.

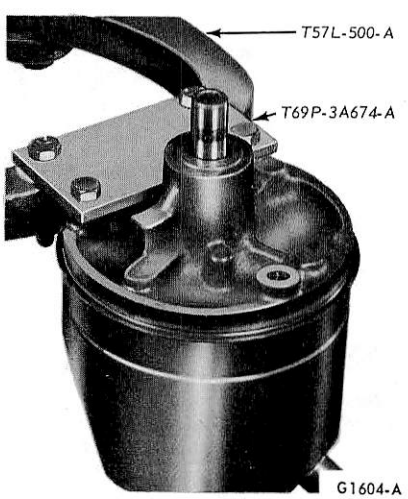

FIG. 14 Adapter Plate Installation

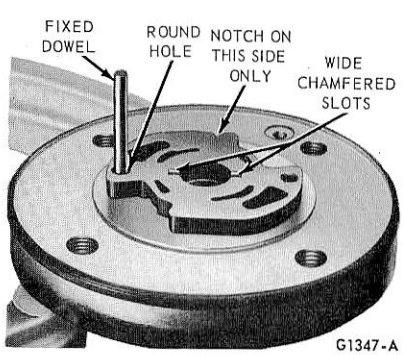

FIG. 15 Lower Pressure Plate Installed

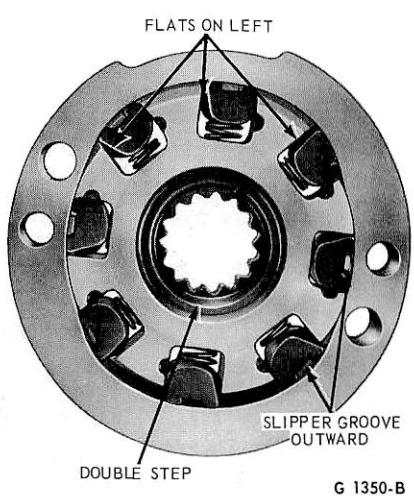

FIG. 16 Correct Slipper Installation

10. Remove the rotor assembly being careful to prevent the springs and slippers from falling out and becoming lost. Do not disassemble further unless the lower pressure plate, housing plate, rotor shaft and/or seal is to be replaced.
11. Invert the pump assembly and, using Tool T69L-10300-A, remove the pulley.
12. Clean any rust, road dirt, burrs, scoring, etc., from the pulley end of the rotor shaft prior to removal of the shaft from the housing plate. The shaft must come out without restrictions to prevent scoring or damage to the bushing. Remove the pump rotor shaft.
13. Remove the lower pressure plate.

Assembly

1. Assemble adapter plate (Tool T69P-3A674-A) to the bench mounted holding fixture Tool T57L-500-A. Position the pump assembly on the adapter plate, pulley side facing down. (If the lower pressure plate and rotor shaft have not been disassembled, omit Steps 2 and 3).
2. Insert the lower pressure plate on the anchor pin with the wide chamfered slots at the center hole facing up (Fig. 15).
3. Dip the rotor shaft in specified power steering fluid D2AZ-19582-A; Then, insert the rotor shaft through the lower pressure plate and housing plate.
4. If the rotor assembly is disassembled, hold the cam insert with the notch on the OD of the cam at the top and the arrow or the open end of the vendor letter mark on the OD of the cam pointing downward.
5. Insert the rotor in the cam with the double step in the ID of the rotor facing upward.
6. With the rotor extended upward approximately one half way out of the cam, insert a spring into a rotor spring pocket working in the rotor cavity directly beneath the cam notch.
7. Use one of the slippers to compress the spring and install the slipper with the groove in the slipper facing upward (toward the cam notch). The flats on the side of the slipper should be on the left (Fig. 16).
8. Hold the cam stationary and turn the rotor either to the right or left, one space at a time. Repeat Step 7 until all the rotor cavities have been filled. Be careful when turning the rotor that the springs and slippers already inserted do not fall out.
9. Install the cam and rotor assembly onto the pump housing plate with the fixed dowel passing through the first hole to the left of the cam notch when the arrow on he cam OD is pointing toward the lower pressure plate (Fig. 17). If the cam and rotor assembly will not seat, turn the rotor shaft slightly until the spline teeth mesh, allowing the cam and rotor to drop down into position.
10. Insert the loose fitting dowel through the cam insert and lower plate into the hole in the housing plate assembly. When the loose dowel is properly installed the heights of the two dowels must be equal. Squirt the rotor, springs, slippers and cam insert with C1AZ-19582-A lubricant.
11. Place the upper pressure plate with the face having the tapered notch down against the cam insert. The fixed dowel should pass through the round dowel hole and the loose dowel through the elongated hole. The slot between the ears on the pressure plate OD should match the notch on the cam insert OD (Fig. 18).
12. Install the retainer end plate so the slot on the end plate OD matches the corresponding notches of the upper pressure plate and cam (Fig. 19).
13. Install the pump valve assembly O-ring seal onto the pump valve assembly being careful not to twist the seal (Fig. 20).
14. Place the pump valve assembly on top of the retainer end plate with the large exhaust slot on the pump valve in line with the OD notches of the previously assembled parts. The stack of parts must be fully seated. If the pump valve has been installed correctly, the relief valve stem will be in line with the lube return hole in the pump housing plate (Fig. 20).
15. Install the oil screen assembly (if so equipped) into the pump housing with a suitable socket. Place small amounts of vaseline on the pump housing plate to hold the cover gasket in place. Install the gasket on the pump housing plate.
16. Insert the pressure plate springs into the pockets in the pump valve assembly. Vaseline may be placed in the spring pockets to hold the springs in position (Fig. 21).
17. Using Tool T69P-3B586-A, plug the intake hole in the housing (Fig. 22).
18. Lubricate the inside of the housing and the housing cover seal with D2AZ-19582-A lubricant. Fabricate two studs (3/8-16 x 1.55) to be used as positioning guides. Install one in the housing plate bolt hole closest to the drain hole and one in the bolt hole diametrically opposite.
19. Align the small diameter lube hole in the housing rim with the lube hole in the housing plate.
20. Install the housing, applying an even, downward pressure. The pressure plate springs **must not** be jarred and moved out of position. Remove the guide studs.
21. Install the housing retaining bolts finger tight.
22. Remove tool T69P-3B586-A.
23. Torque the retaining bolts to specification until the housing flange contacts the gasket.
24. Install a 3/8 x 16 hex head screw, finger tight, into the end of the rotor shaft. Using a torque wrench, check the input torque of the shaft (Fig. 22). The torque should not exceed 15 in-lbs. If it does, loosen he retaining bolts slightly, rotate the rotor shaft, retorque the bolts evenly and again check the shaft torque. **The pump must not be used if the shaft torque exceeds 15 in-lbs.**
25. Release the pin in the bench holding fixture and agitate the pump assembly back and forth. If there is a rattle, the pressure plate springs have fallen out of their seats and must be reinstalled.
26. Install the reservoir O-ring on the housing plate being careful not to twist the O-ring. Apply vaseline to the seal and to the ID of the reservoir flange.
27. Install the reservoir, aligning the notch in the reservoir flange with the notch in the OD of the pump housing plate and bushing assembly. Using only a plastic or rubber hammer, tap at the **rear on the outer corners of the reservoir to avoid damage.**
28. Inspect the assembly to determine if the reservoir is seated on the housing plate.
29. Install the service identification tag on the outlet valve fitting.
30. Install the outlet valve fitting nut and torque to 43-47 ft-lbs.
31. Invert the pump assembly.
32. If the pulley was removed, install the correct pulley using Tool T65P-3A733-A.

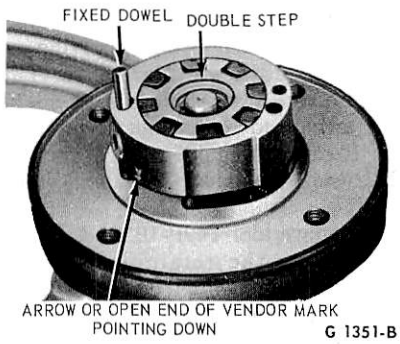

FIG. 17 Cam and Rotor Installation

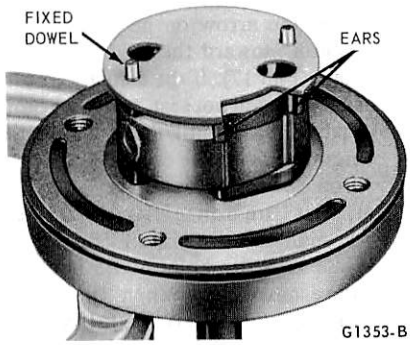

FIG. 19 Retainer End Plate Installation

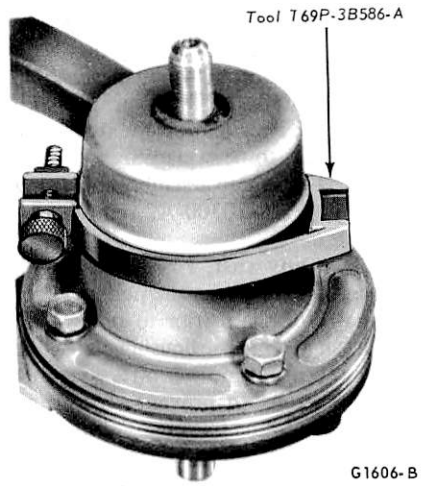

FIG. 21 Pump Housing Installation

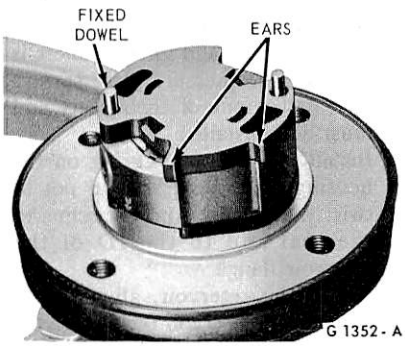

FIG. 18 Upper Pressure Plate Installation

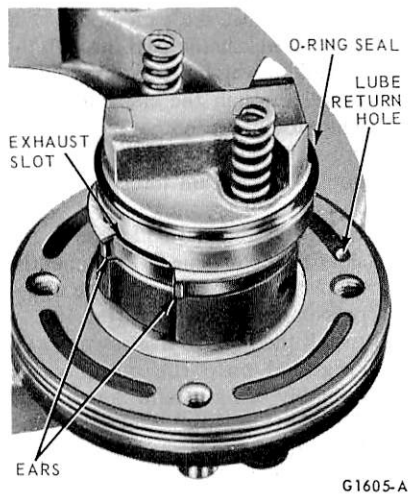

FIG. 20 Valve and Pressure Spring Installation

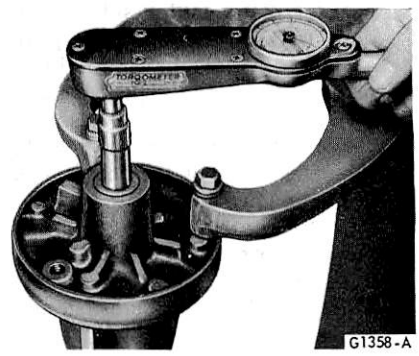

FIG. 22 Checking Pump Rotational Torque

SPECIFICATIONS

FORD-THOMPSON POWER STEERING PUMP SERVICE SPECIFICATIONS

Description	Specification	
Pump Rotor Shaft End Play	0.017 In. Max. – 0.003 In. Min.	
Max. Torque Allowed to Rotate Rotor Shaft	15 In-Lb	
Stamped Housing to Plate	Bolt Hex-Washer Hd.	38–47 Ft-Lb
Reservoir to Stamped Housing Nut	43–47 Ft-Lb	

SPECIAL SERVICE TOOLS

Tool No.	Description
T63L-8620-A	Belt Tension Gauge
T64L-10300-A	Pulley Remover
T65P-3A733-A	Pulley Installer
T64P-3A674-A	Adapter Plate
T57L-500-A	Bench Mounted Holding Fixture
T68P-38592-A	Pump Shaft Seal Replacer
T68P-38592-B	Pump Shaft Seal Protector
T69P-38586-A	Pump Housing Hole Plugging Tool
T71P-3D643-B	Belt Tension Wrench

FORD-THOMPSON POWER STEERING PUMP ATTACHING TORQUES (FT-LB)

Vehicle Application	Bronco	F-100-350	Econoline
Operation			
Pump to Bracket	30-40	30-45	40-50
Bracket to Engine	11-16	45-65	12-17
Pressure Hose to Pump Nut	20-30	20-30	20-30
Return Hose Clamp	10-18 (In-Lb)	12-24 (In-Lb)	18-24 (In-Lb)
Support Bracket to Engine	–	30-45	–
Hose Bracket to Pump	–	20-30	–
Reservoir Bracket to Engine	–	–	10-20 (In-Lb)

PART 13 -51 Power Steering Pumps—Eaton

Does Not Apply To F-100-350, Bronco, Econoline

COMPONENT INDEX	Page	COMPONENT INDEX	Page
DESCRIPTION	51-01	POWER STEERING PUMP - Cont.	
POWER STEERING PUMP		Filter Element Replacement	51-07
Disassembly and Assembly	51-05		
Removal and Installation	51-01	SHAFT SEAL INSTALLATION	51-02

DESCRIPTION

POWER STEERING PUMP

The medium duty Eaton power steering pumps are single stroke roll vane types. The reservoir can either be mounted to the top of the pump body or mounted remotely and connected with a hose to an adapter bolted to the top of the pump body.

The heavy duty Eaton pumps are hydraulically balanced roll vane types with pressure balanced end plates. Normally the reservoir is attached to and surrounds the pump. There is a special reservoir with an inlet tube (lower section only) for the pumps to be used when the reservoir is remotely mounted.

The pumps can be either belt or gear driven.

REMOVAL AND INSTALLATION

When performing any service operations on power steering systems which necessitate hose disconnecting, make certain the hoses are tagged prior to removal. It is important that the hoses are reconnected to their correct ports to preclude damage to the system.

For pump installations, see Figures 1 through 7.

POWER STEERING PUMP

Removal

1. Using a suction gun, remove as much fluid as possible from the reservoir through the filler opening.
2. Disconnect the pressure hose from the pump and disconnect the return line from the cooler or reservoir. Then fasten both hoses in a raised position to prevent the fluid from draining out. **On a C-Series truck, the hoses can be more easily disconnected after the pump has been removed from its bracket and is resting on the frame member.**
3. After loosening the adjusting bracket bolt and the pivot bolt, remove the pump belt. Then remove the bolts, and remove the pump and fluid reservoir together.

Installation

1. Hold the pump and fluid reservoir and the adjusting bracket on the pump support, and install the mounting bolts and washers. Tighten the bolts finger-tight.
2. Place the pump belt on the crankshaft pulley and pump pulley, and tighten the belt.
3. Adjust the pump belt tension. When the tension is correct (150 lbs per strand on single belt drives; 100 lbs per strand on dual belt drives), torque the adjusting bolts and the pivot bolt to specifications.

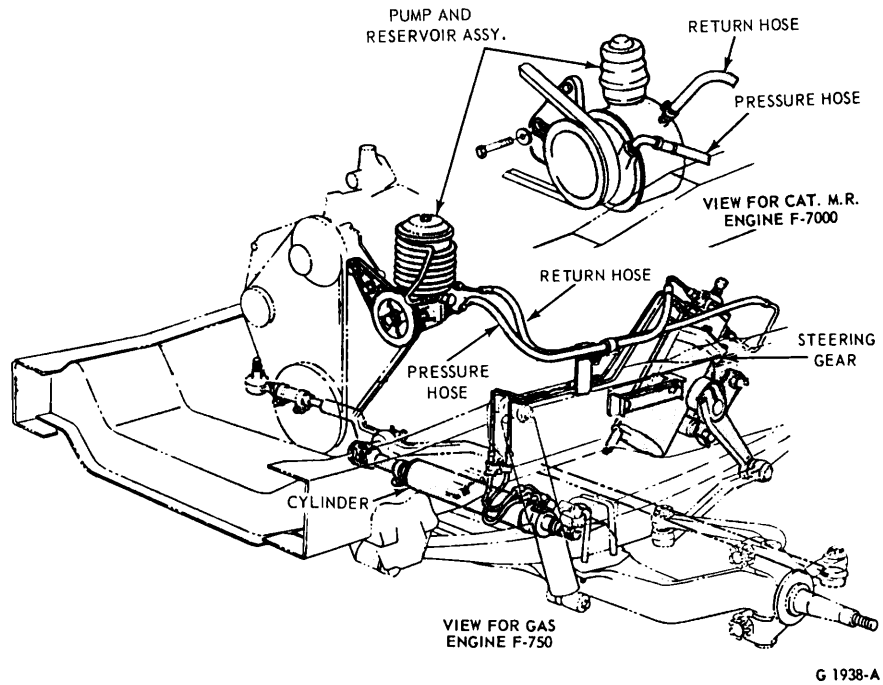

FIG. 1 Power Steering Pump Installation — F-750-7000 with 9000 lb. Axle (F-B-500-750-6000-7000, LN-750 With 9000 lb. Axle Similar)

4. Connect the two hoses to the pump and fluid reservoir. It is important to be sure that all power steering lines are connected to the correct ports.
5. Fill the fluid reservoir to specification with automatic transmission fluid.
6. Start the engine and run it at idle speed for about two minutes to warm the fluid in the power steering system. Check the fluid level and add if necessary.
7. Turn the steering wheel all the way to the left and right several times, and check the system for fluid leaks.
8. Increase the engine speed to about 1000 rpm, in turn the steering wheel all the way to the left and right several times. Do not hold the wheels against the stops.
9. Stop the engine, and check the pump, reservoir, and hose connections for fluid leaks. Correct the cause of any leaks. Add fluid if necessary.
10. Turn the steering wheel as required to place the front wheels in the straight ahead position. Check the fluid level, and refill the reservoir if necessary.

POWER STEERING PUMP SHAFT SEAL

Removal and Installation

If the shaft seal was removed from the pump housing, install a new seal. **Do not install the old seal.**

1. Coat the lip of a new seal with Lubriplate or an equivalent lubricant.
2. Position the seal in the bore of the housing. **The lip of the seal must face toward the pump housing carrier chamber.**
3. Press the seal into the housing (Fig. 8) until it seats firmly and evenly against the shoulder in the bore.

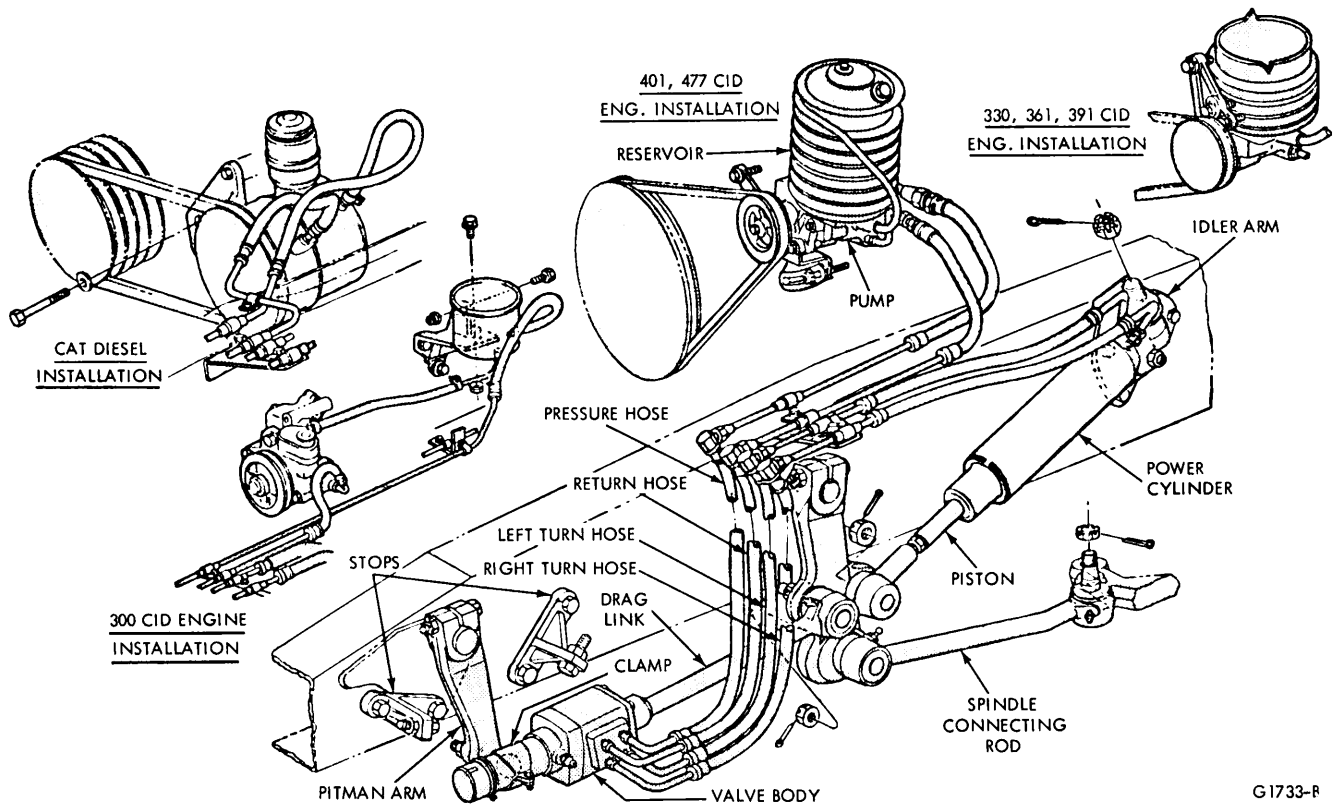

FIG. 2 Power Steering Pump Installation — C-500-800-900 (9.50 Frame), C-6000-8000

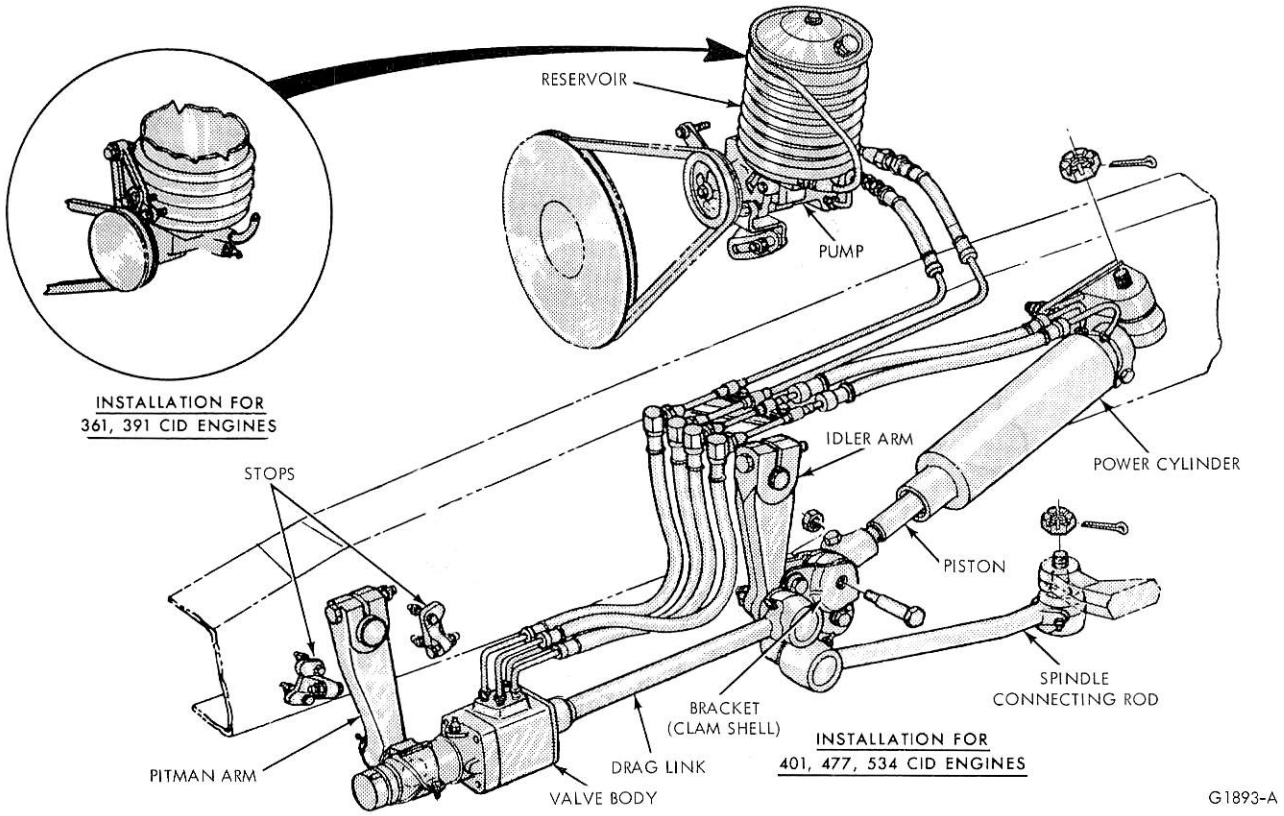

FIG. 3 Power Steering Pump Installation — C-900 (9.76 Frame), CT-800-900 With 9, 12, 15000 lb. Axles

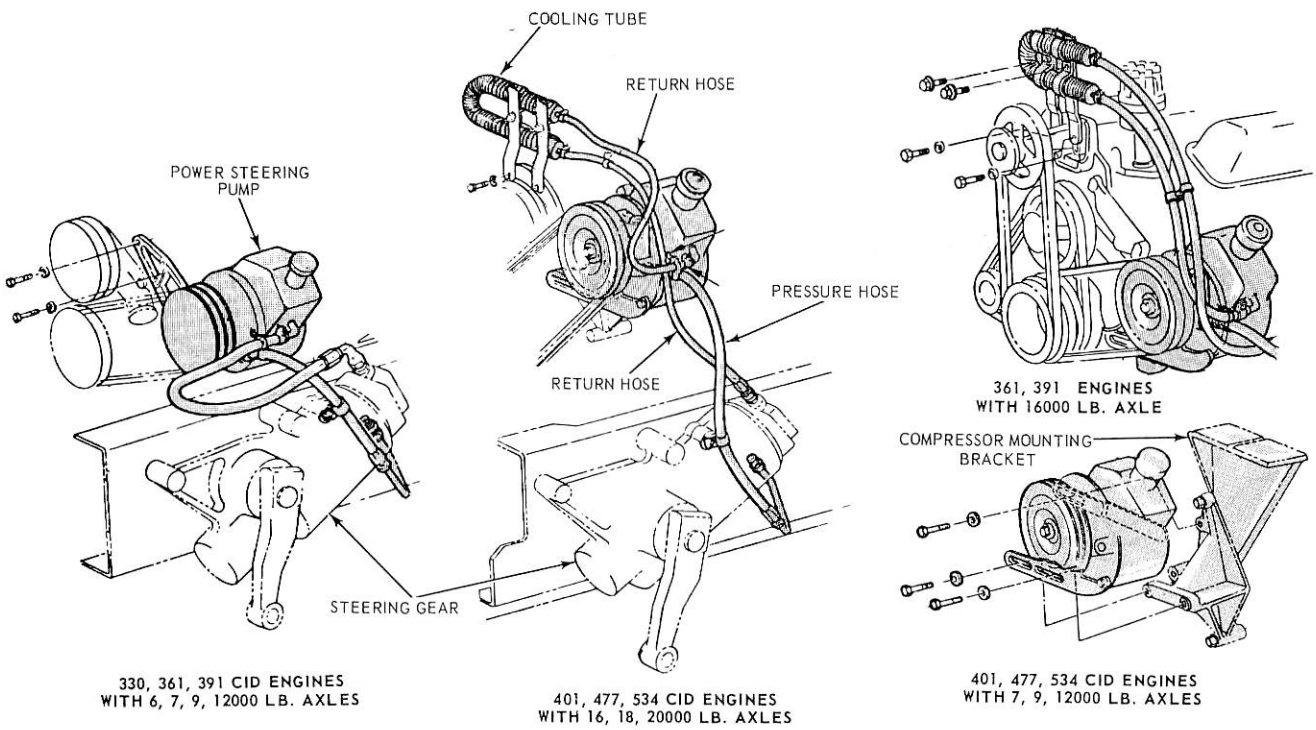

FIG. 4 Power Steering Pump Installation — L-800-900 Series

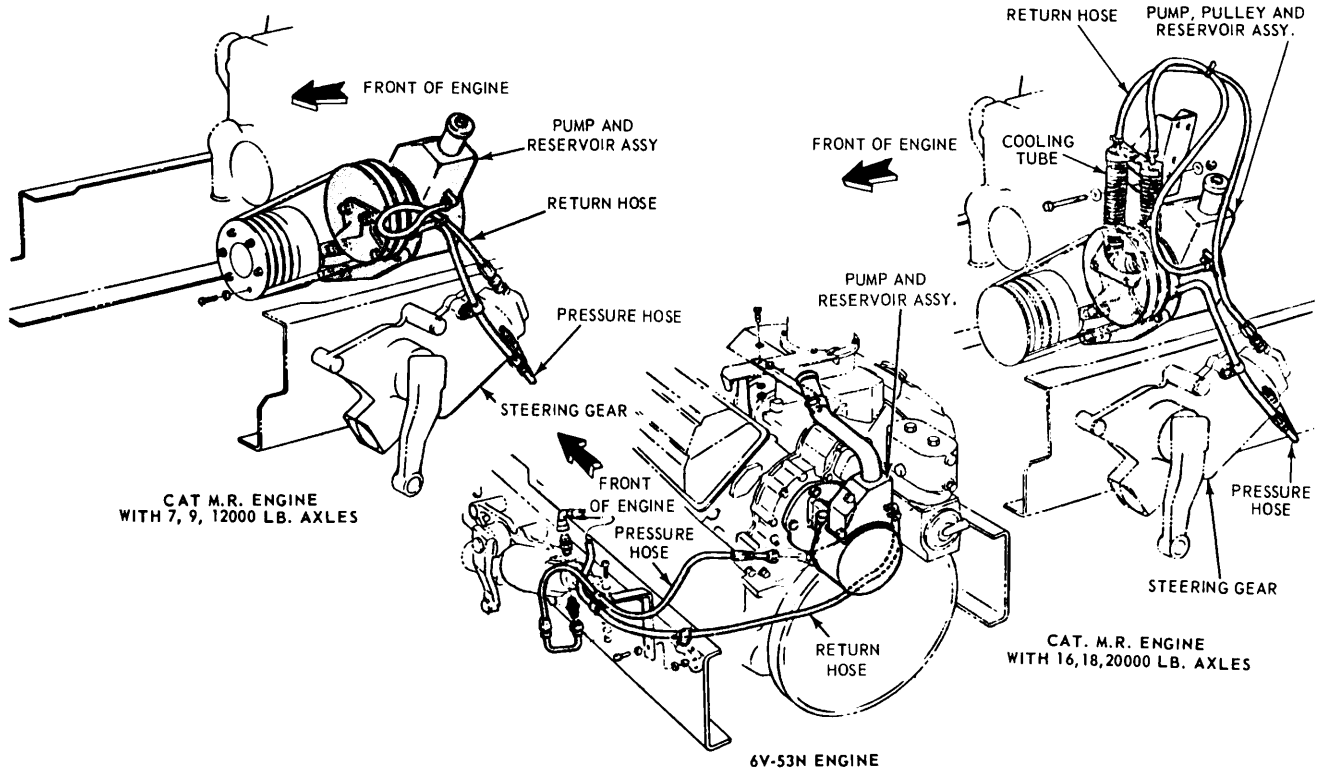

FIG. 5 Power Steering Pump Installation — L-8000 Series

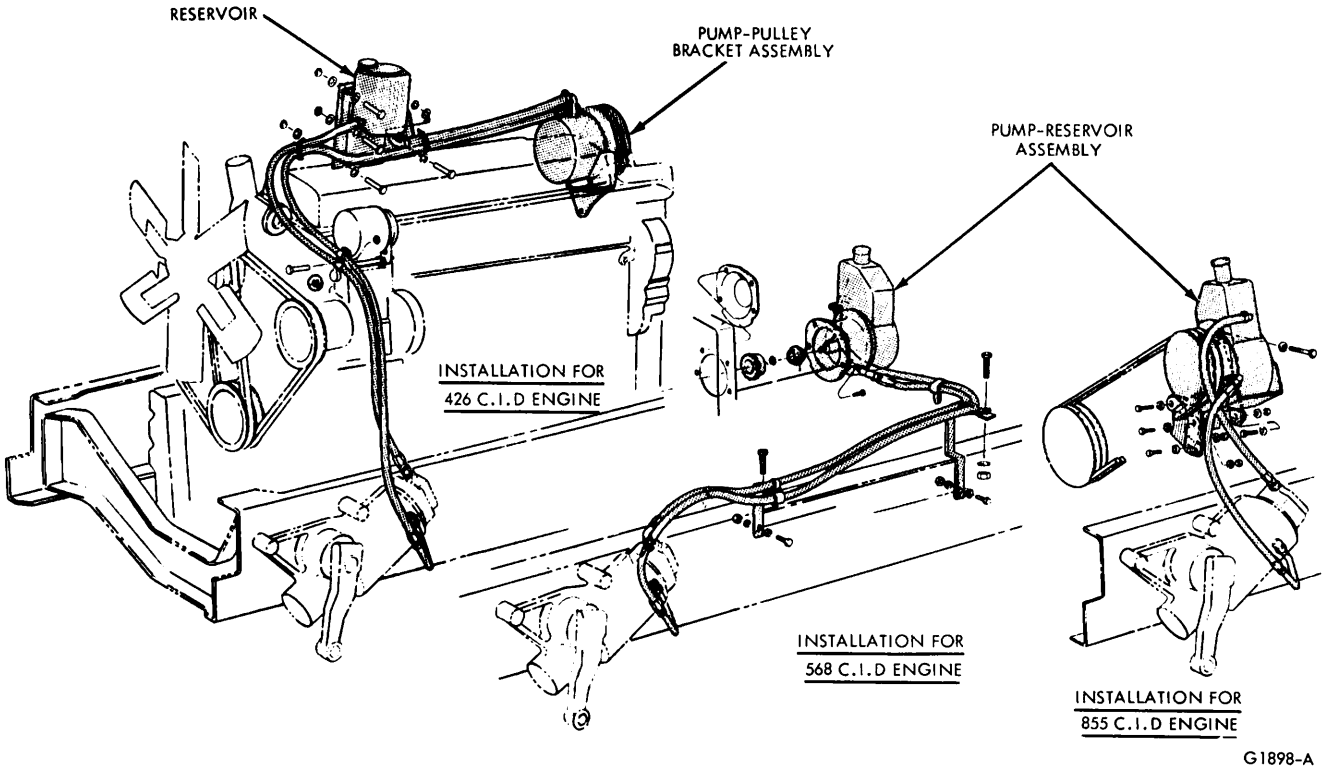

FIG. 6 Power Steering Pump Installation — L-9000 Series

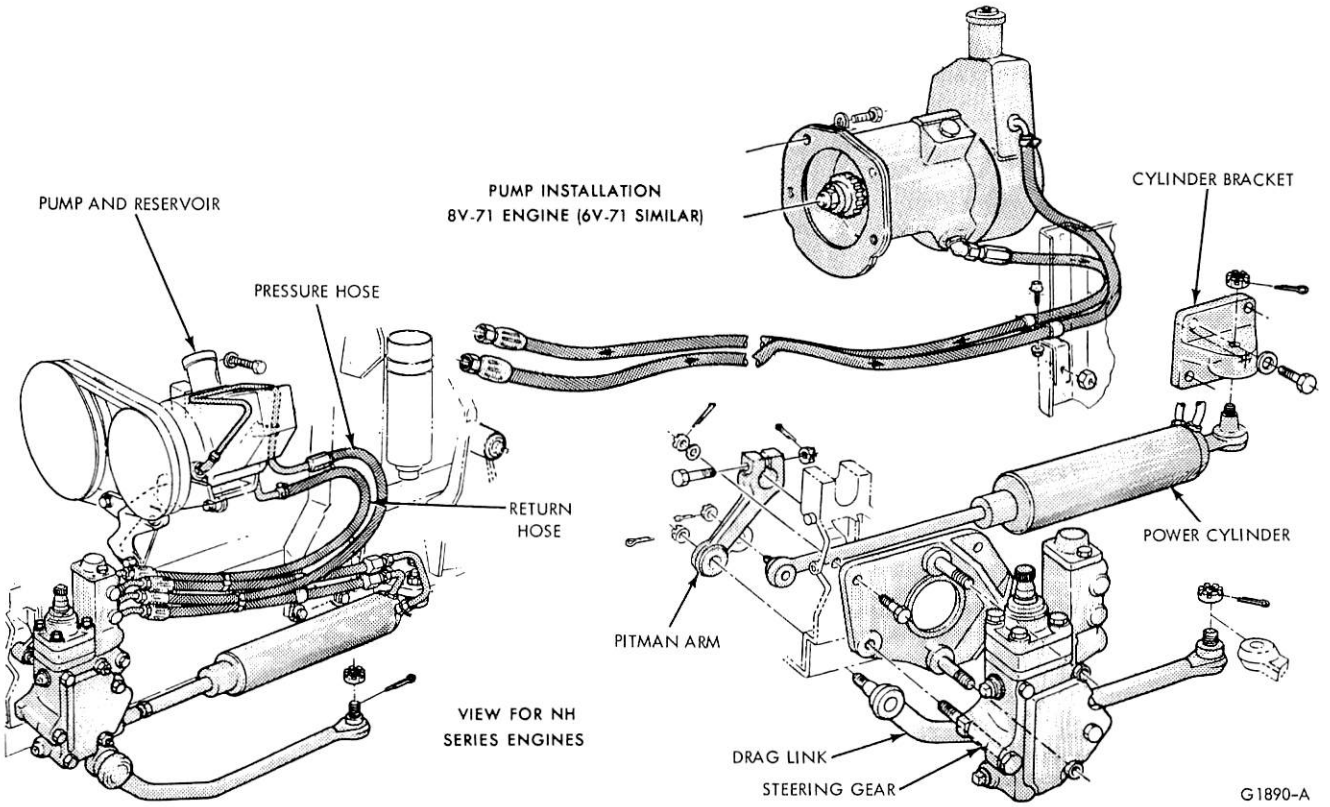

FIG. 7 Power Steering Pump Installation — W-WT-Series

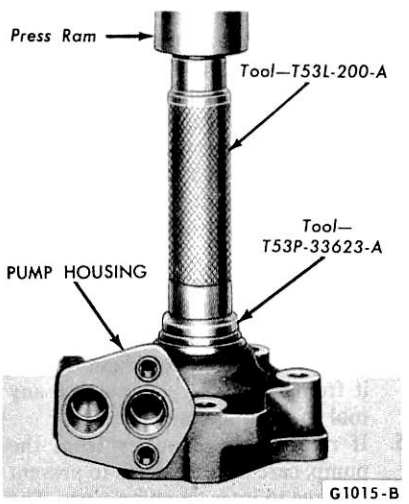

FIG. 8 Shaft Seal Installation

DISASSEMBLY AND ASSEMBLY

POWER STEERING PUMP

C-B-F-LN-500-750

Disassembly

Handle all parts very carefully to avoid nicks, burrs, scratches and dirt which could make the part unfit for use.

1. On vehicles with a pump-mounted reservoir, remove the reservoir cover from the reservoir. Then, drain as much of the remaining fluid as possible from the pump and clamp the pump adjusting bracket in a vise. On vehicles with a remote reservoir, disconnect the fluid supply hose at the pump and plug the hose.
2. Disconnect the cooling coil at the pump.
3. If the vehicle is equipped with a pump-mounted reservoir, remove the filter element support bolt and the reinforcement plate (Fig. 9). Lift the reservoir off the pump.
4. Remove the four O-rings from the top of the pump (Fig. 10). Remove the pulley and the pulley key from the shaft. Loosen the pump valve retainer.

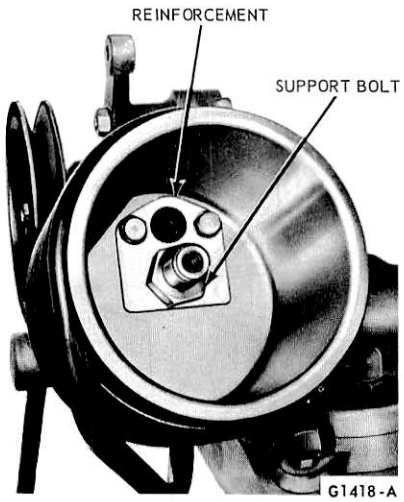

FIG. 9 Reservoir Installation

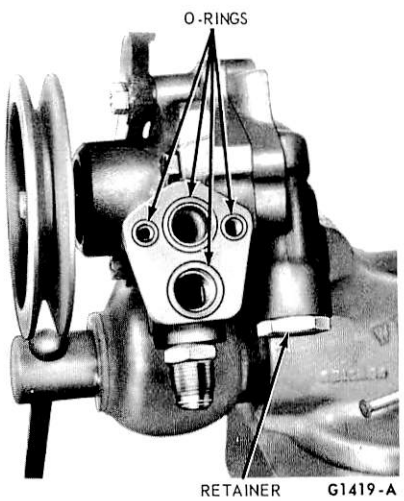

FIG. 10 Reservoir O-Rings

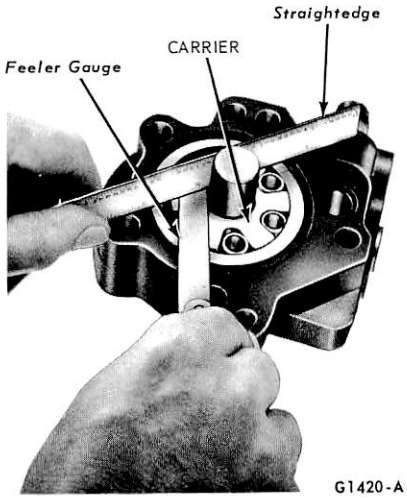

FIG. 11 Checking Carrier and Roller and Clearance

5. Remove all the bolts from the pump, and separate the bracket, pump housing, and housing cover. If the parts do not pull apart easily, tap them gently with a soft hammer to loosen them. Lift the cover vertically from the housing to prevent internal parts from falling out.
6. Remove the O-rings from the pockets around the by-pass hole and the cam insert. All parts should be washed and inspected.
7. Using a feeler gauge and a straightedge, check the end clearance of the carrier and the rollers in the pump housing (Fig. 11). If the clearance exceeds 0.0015 inch, replace the worn parts. A damaged roller, carrier or insert should not be replaced by itself; these parts are serviced in a kit, and all parts of the kit should be used.
8. Remove the rollers, slide the carrier off the shaft, and remove the carrier drive pin. If the carrier is to be reused, note the original assembly position to assure correct reassembly. Remove the cam insert. Be sure to remove the small cam locating pin in the bottom corner of the cam pocket.
9. Remove the bearing retainer ring (Fig. 12), and tap the bearing and shaft assembly out of the pump housing.
10. Remove the pump valve retainer, spring and the valve from the pump cover. If the valve does not slide out easily, tap the cover with a soft hammer. Remove the O-ring from the retainer.

Assembly

During assembly of the pump, coat all moving parts and friction surfaces with automatic transmission fluid.

1. Install the shaft and bearing assembly in the pump housing taking care not to damage the seal; then, install the bearing retainer.
2. Install the cam insert so that the slot in the edge of the insert engages the pin in the pump housing.
3. Install the carrier drive pin on the pump shaft and then assemble the carrier on the shaft. The driving edges of the carrier must face in the direction of pump rotation (Fig. 13).
4. Install new O-rings in the recesses around the by-pass hole and the cam insert (Fig. 13). Install the rolls in the slot in the carrier. Attach the pump cover to the housing with two bolts.
5. Clamp the mounting bracket in a vise, and install the pump on the bracket.
6. Place the pulley key in the pump shaft, then install the pulley and the retaining bolt and washer. Torque the pulley bolt to specification. The pulley and pump shaft should rotate freely with no bind at any point after all bolts are tightened to specification.
7. Slide the pump valve into the bore in the cover. Place a new O-ring on the valve retainer, and install the pump valve spring and the retainer (Fig. 14).
8. On pump-mounted reservoir equipped vehicles, place new O-rings in the grooves in the top of the pump housing (Fig. 10). Hold the reservoir on the pump housing, and install the reinforcement plate and the support bolt (Fig. 9).
9. Install the filter element and the cover assembly. Connect the cooling coil at the pump.

L-W-SERIES WITH 8V-71, 6V-53, 6-71, NH, FT, SD, CUMMINS, CAT ENGINES

Disassembly

1. Drain most of the oil from the pump reservoir by disconnecting the pressure line from the steering gear and allow the pump to drain into a 1-gallon (minimum) pan. Disconnect the return line from the reservoir.
2. On some units, it may be necessary to remove the pump from the vehicle. Then remove the two 9/16 inch hex nuts from the studs on the back of the reservoir.
3. Remove the two flat washers and spacers (if used) from around the studs. Remove the two studs (Fig. 15).
4. Tap the reservoir with the palm of the hand so it rotates slightly around the pump body. Carefully rock the reservoir back and forth and remove it from the pump. **Do not use any tool to pry the reservoir off.**
5. If removing the pulley from the pump, care must be taken to prevent damage to internal pump parts. The pulleys on some models have a groove on the center hub to accommodate a standard puller. Other models do not have the groove and Steps 6 and 7 should be followed.

Do not in any case exert a force either outward or inward on the pulley outside diameter or attempt to force the shaft into or out of the pump.

6. To remove the pulley, back out the pulley retaining bolt approximately 1/2 inch.
7. While holding the pump up by the pulley, gently tap on the head of the bolt. The pulley is a slight press fit

on the shaft and may require several taps for removal.
8. When replacing the pulley on the shaft, be careful the Woodruff key does not slip out of the keyway and up behind the pulley. There is a slight press fit between the pulley and the shaft for about the last 1/8 inch engagement.
9. Install the flat washer, the lock washer and tighten the pulley retaining bolt 15-20 ft-lb to pull the pulley in place.

FILTER ELEMENT

1. After the reservoir has been removed from the pump, place the reservoir face up on a work bench. The filter element is positioned horizontally in the upper reservoir.
2. The filter is supported on one end by the filter spring and on the other end by the cap. These are supported by the return oil tube that projects inside the reservoir.
3. Remove the filter element by hooking the spring with a screwdriver or other suitable tool and pulling the spring and filter downward into the large opening.
4. Replace the filter by reversing the removal procedure using the fingers to feed the spring in place with the filter. Be sure the spring is properly positioned in the detent provided on the side of the reservoir.

Assembly

1. Install the two attaching studs finger-tight (1-10 ft-lb) into the pump.
2. Assemble a new sealing washer over each stud.
3. Install a new O-ring on the OD of the pump. Apply Lubriplate around the O-ring prior to assembling the reservoir to the pump.
4. Position the reservoir over the two studs and then push the reservoir forward over the large O-ring on the OD of the pump. Be sure the reservoir is positioned evenly and completely forward.
5. Install a new external sealing washer, spacer (if used) and retaining nut to each stud.
6. Tighten the retaining nuts to 20-30 ft-lb torque.
7. If the pump has been removed from the vehicle, reinstall it and attach the hose lines.
8. Fill the reservoir to the cold fill mark on the sight glass with specified fluid.

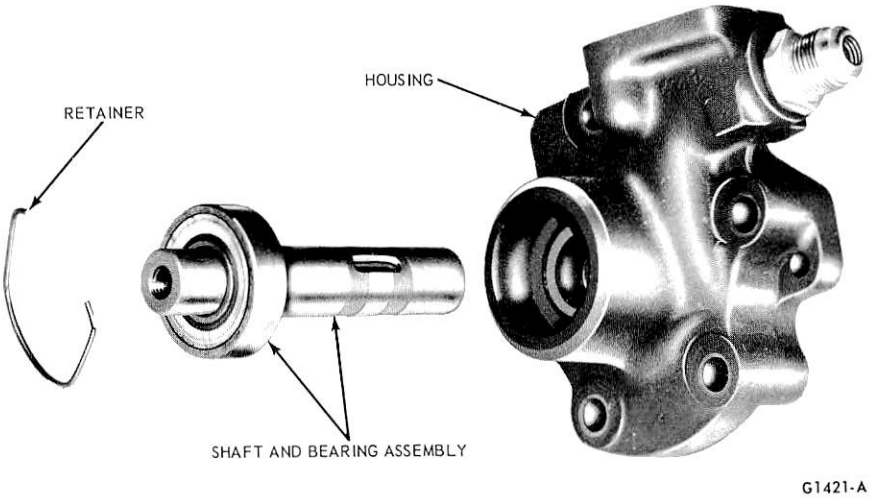

FIG. 12 Carrier Shaft and Retainer Disassembled

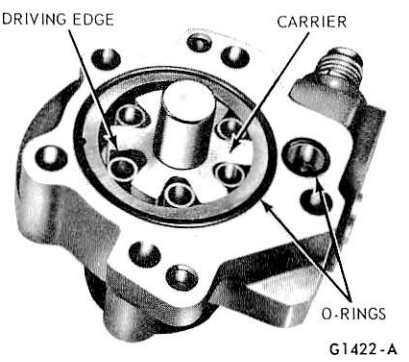

FIG. 13 Carrier and Roller Installation

9. Start the engine and run at idle speed for 2-3 minutes. Stop the engine and add fluid to the reservoir if necessary to bring the level to the cold fill mark again. Do not turn the steering wheel during the initial bleeding operation.
10. Turn the wheels slowly from side to side several times to completely bleed any air from the system.
11. With the wheels in a straight ahead position, stop the engine and once more check the fluid level. Add fluid if necessary but do not overfill the system.

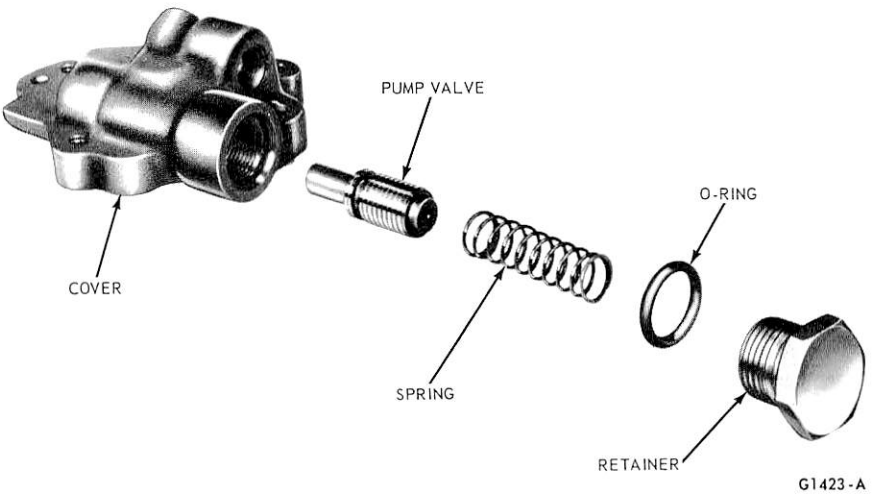

FIG. 14 Pump Valve and Related Parts

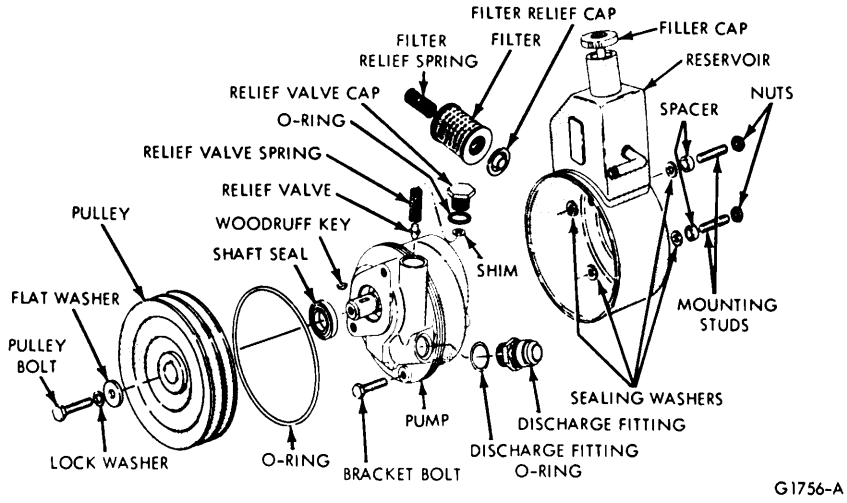

FIG. 15 Heavy Duty Power Steering Pump — Disassembled

Suspension

GROUP 14

	Page
PART 14-01	
General Suspension Service	**14-01-01**
PART 14-20	
Front Suspension – Solid I-Beam	**14-20-01**
PART 14-21	
Front Suspension – Twin I-Beam	**14-21-01**
PART 14-22	
Front Suspension – 4-Wheel Drive	**14-22-01**
PART 14-31	
Rear Suspension – Leaf Springs	**14-31-01**
PART 14-40	
Rear Suspension – Hendrickson Tandems	**14-40-01**
PART 14-41	
Rear Suspension – Reyco 101 Tandem	**14-41-01**

PART 14-01 General Suspension Service

COMPONENT INDEX Applies to Models As Indicated	MODEL APPLICATION											
	All Models	F-100-350, Econoline	F-250-350, Bronco 4x4	P-350-500	F-500-7000	L-800-9000	LT-LTS-800-9000	B-500-7000	LN-500-9000	LNT-800-9000	C-CT-500-8000	W-WT-9000
FRONT END ALIGNMENT												
Adjustments	01-06											
Checks		01-01	01-05	N/A	N/A	N/A	N/A	N/A	N/A	N/A	N/A	N/A
FRONT END GENERAL INSPECTION	01-07											
SPECIFICATIONS	01-10											
STEERING STOP ADJUSTMENTS	01-07											

A page number indicates that the item is for vehicle(s) listed at the head of the column.
N/A indicates that the item is not applicable to the vehicle(s) listed.

TESTING

FRONT END ALIGNMENT CHECKS

E-100-300, F-100-350 VEHICLES WITH TWIN-I-BEAM FRONT SUSPENSION

Do not attempt to check and adjust front wheel alignment without first making a preliminary inspection of the front end parts.

Wheel alignment specifications and the method of checking caster, camber and toe alignment for Twin-I-Beam vehicles are made with the vehicle at normal operating height and attitude. The vehicle frame must be level across the front side to side when checking caster or camber. Check for toe alignment with vehicle as equipped.

Incorrect wheel alignment can cause tire wear. Abnormal or excessive tire wear can also be caused by wheel/tire unbalance or incorrect tire pressure. Typical tire wear patterns are shown in Fig. 1. These examples are only a guide: Incorrect toe alignment and extreme camber wear patterns resemble each other.

Toe alignment maladjustment, rather than caster or camber, is more likely to be the cause of excessive or uneven tire wear on vehicles with Twin-I-Beams. Toe alignment should be the first thing checked (and adjusted) to correct for excessive tire wear.

Checking Toe Alignment

Correct toe alignment is the inward pointing to both front wheels at the front.

1. Inflate all tires to the specified pressure.
2. Check the front axle pivot bushings and radius arm-to-frame bushings for excessive wear or deterioration. Replace if necessary.
3. Check the front wheel bearings and adjust if necessary.



UNDERINFLATION



OVERINFLATION



CUPPING—UNDERINFLATION AND/OR MECHANICAL IRREGULARITIES

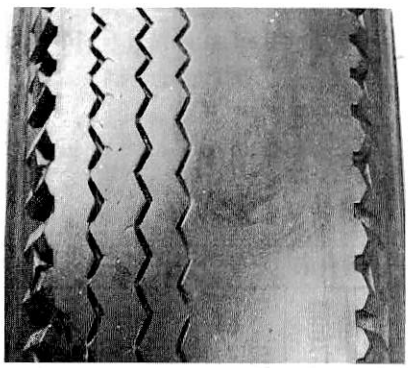

INCORRECT TOE-IN OR EXTREME CAMBER



FEATHERING DUE TO MISALIGNMENT OR SEVERE CORNERING

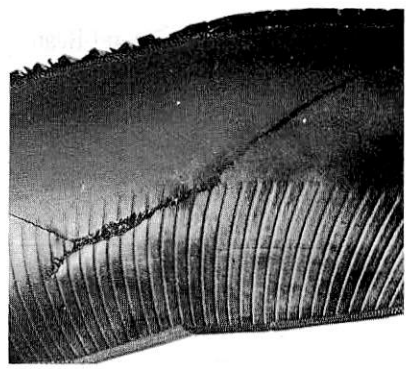

STONE BRUISE

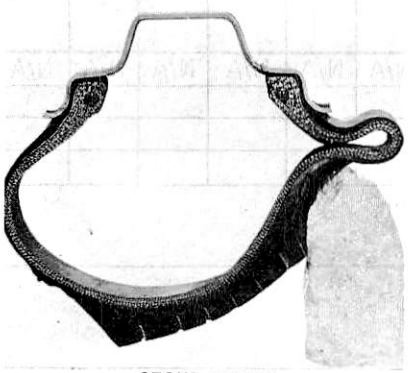

STONE BRUISE

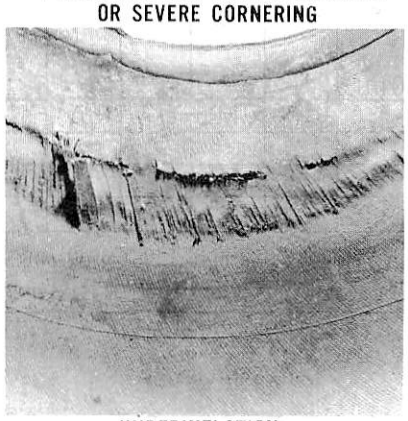

UNDERINFLATION

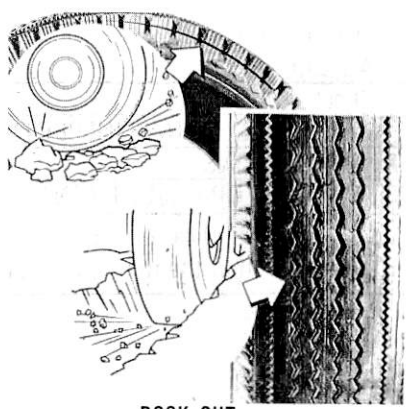

ROCK CUT



BRUISE

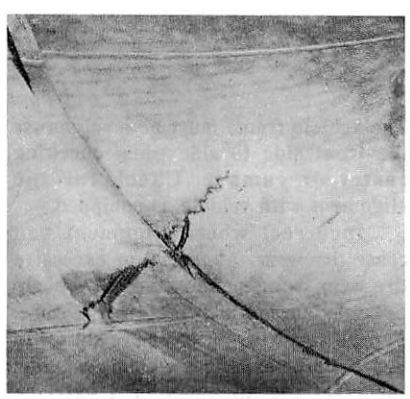

HEAT BRUISE

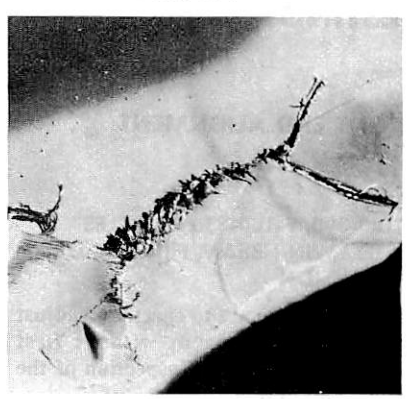

DOUBLE BRUISE—SHARP OBJECT AND RESULTING FATIGUE

F1467-D

FIG. 1 Tire Wear Conditions

4. Check both front tires. They should be the same size, ply rating, lead range and rolling radius. The axles must be level and can be checked by measuring the distance from spindle center to ground. If heights exceed 1/16 inch difference, add shims under the low side tire or deflate the high side tire. **Be sure to reinflate the tire to the specified pressure.**
5. If the alignment equipment being used attaches to the wheels, check and adjust the fixture for wheel runout.
6. Torque the spindle pin lock pin to 40-55 ft-lb.
7. Check the spindle pins and/or spindle bushings for evidence of excessive wear. Grasp each tire at the top and bottom and shake the wheel while watching the movement of the brake backing plate (or disc brake support). If the brake backing plate moves more than 1/32 inch, replace the spindle pins and bushing.
8. Check the toe alignment dimension with the wheels in the straight ahead position. Measure the distance between the extreme front and also between the extreme rear of both front wheels. Measure at an equal distance from the floor approximately at the center of the spindle. The difference between these two measurements is the amount the wheels toe-in (or toe-out). If the toe alignment is not within the 1/32 inch out to 7/32 inch in (F-Series) and 3/32 inch out to 5/32 inch in (E-Series) specification. **Do not attempt to adjust by bending suspension or steering linkage components.**

Checking Caster and Camber

The Twin-I-Beam front suspension design, used on all F-Series (4 x 4) and ESeries trucks, has caster and camber angles built-in and are non-adjustable.

Caster is the number of degrees of backward (positive) or forward (negative) tilt of the spindle (king) pin. Camber is the number of degrees the top of the wheel tilts outward (positive) or inward (negative) from a vertical plane.

Before checking caster or camber, perform the previously detailed toe-in check. Level the vehicle. Equal height blocks placed between the axle and frame may be used for leveling with appropriate ballasting or clamping as required. Measure from a similar point on the right and left frame side rail to the axle I-Beam top surface. Distances should be equal from side to side within 1/8 inch.

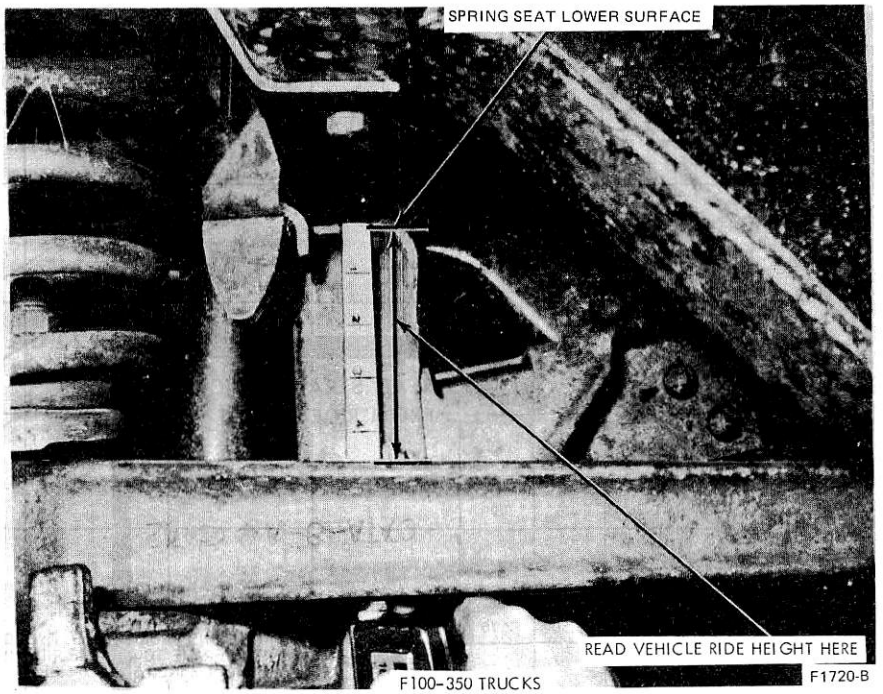

FIG. 2 Ride Height Measurement Procedure — F-100-350 Trucks

To determine the ride height of the F-100 through F-350 trucks, measure between the axle and spring seat lower surface (Fig. 2). On Econoline vehicles, measure between the axle and the bottom of the sill (Fig. 3).

Now measure the caster and camber with appropriate equipment. Be sure and follow the manufacturer's instructions. Figure 4 illustrates the step-by-step procedure for using the caster and camber angle charts (Figs. 5 and 6). Caster and camber specifications for Econoline and Light Trucks with Twin-I -Beam suspension are included in the Specification Section at the end of this Part.

Determine that the major difference between wheels is not caused by a non-level vehicle, worn pivots, a bent or loose spindle, etc. before making caster or camber alignment corrections.

To determine which wheel is truly out of specification once an excessive side-to-side variation has been verified, the caster and camber charts in Figures 5 and 6 must be used. They illustrate a band of values acceptable for a given ride height.

Having determined the vehicle ride height (Figs. 2 and 3), the appropriate caster and camber readings can be determined from Figures 5 and 6. The ride heights must be approximately

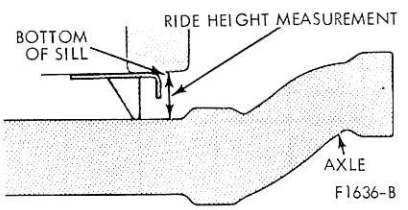

FIG. 3 Ride Height Measurement Procedure — Econoline

equal (within 1/8 inch) from side to side.

Caster is built into the I-Beams. Alignment equipment only indicates a true reading when the frame is horizontal, front to rear. If the frame is not level (due to tire, spring or load differences), the caster angle reading must be modified. If the front is higher than the rear, **subtract the amount of angle from the reading. If the front is lower than the rear, add the angle.**

On F-100-350 trucks, measure the frame angle with a spirit level protractor on he lower frame flange at the flat area immediately adjacent to the rear spring front hanger (Angle A, Fig. 7). On Econoline vehicles, take the measurement midway between the front and rear axles on the floor sidemember

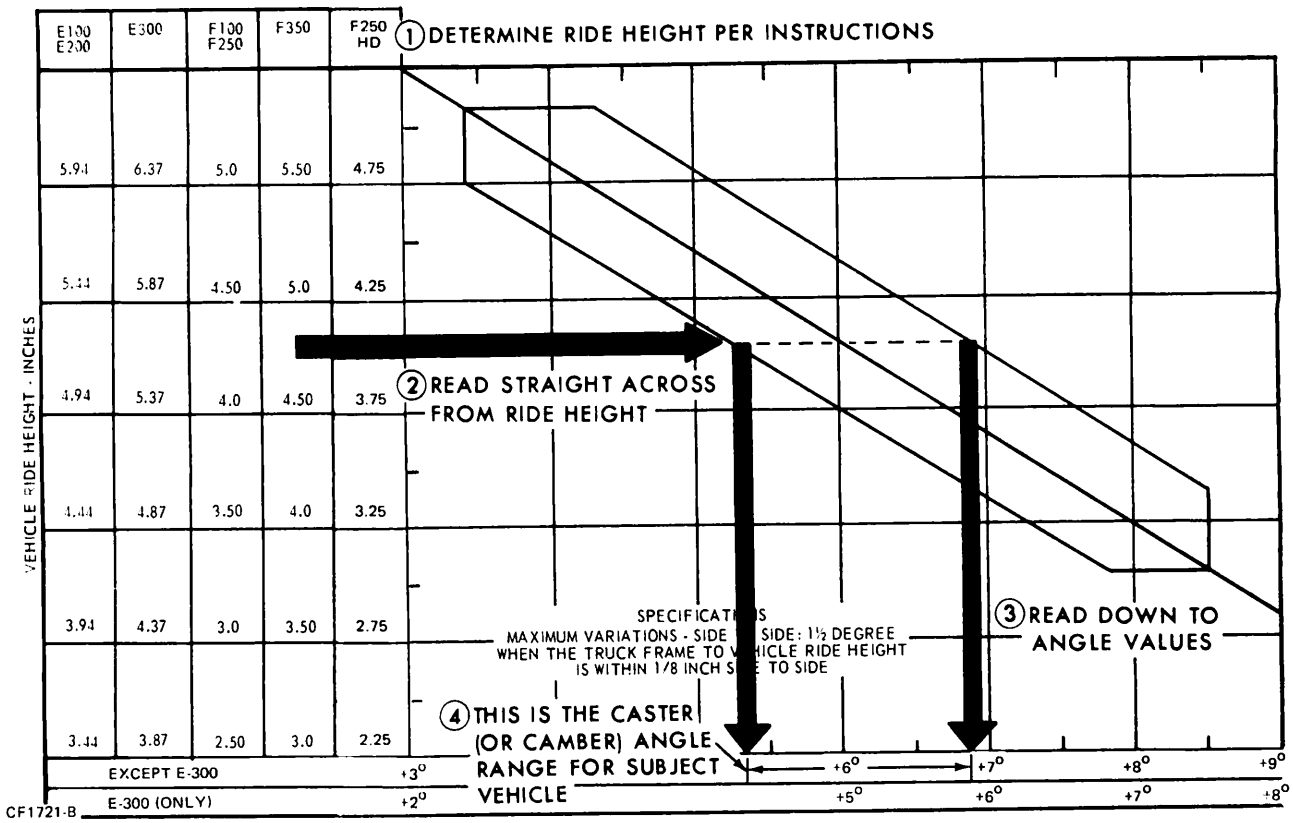

FIG. 4 Procedure for Using Caster and Camber Charts

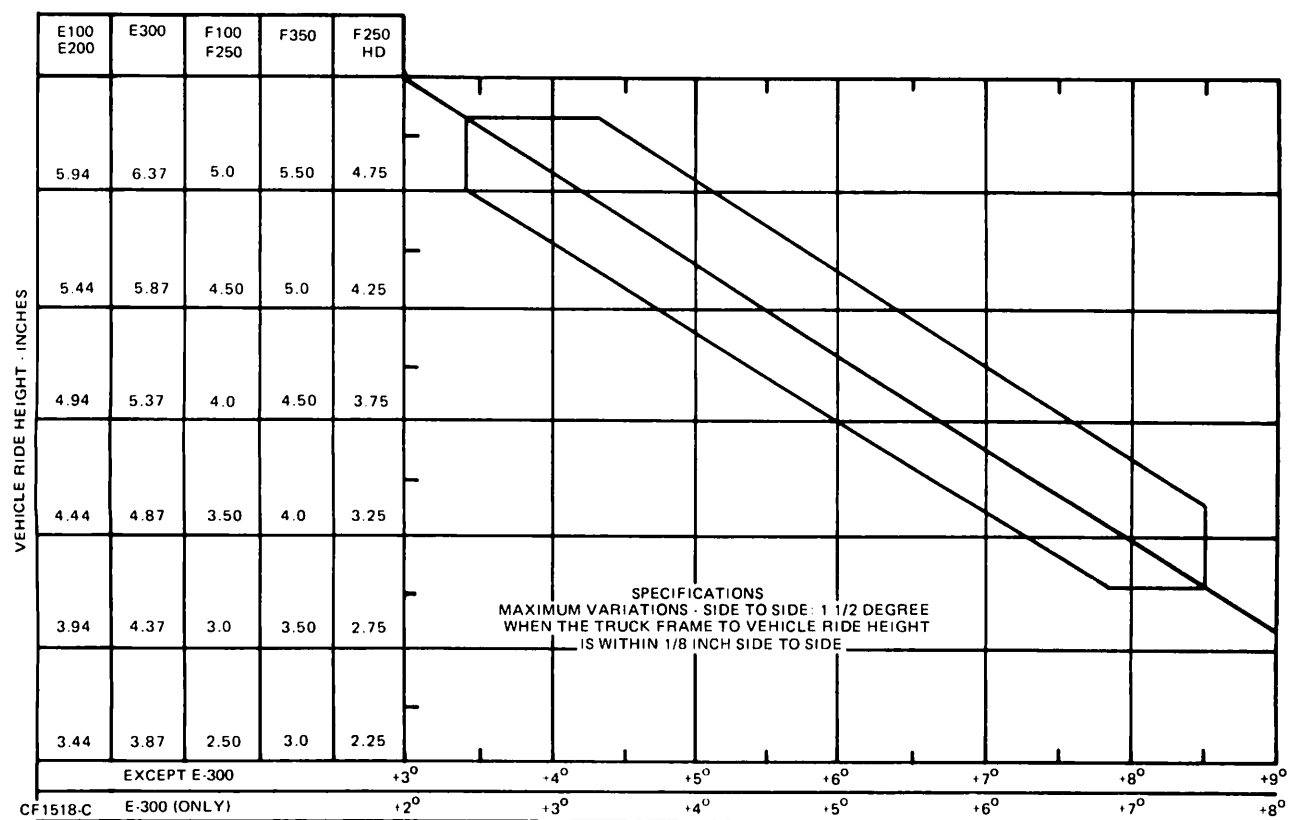

FIG. 5 Caster Angle Chart — Lt. Trucks, Econoline

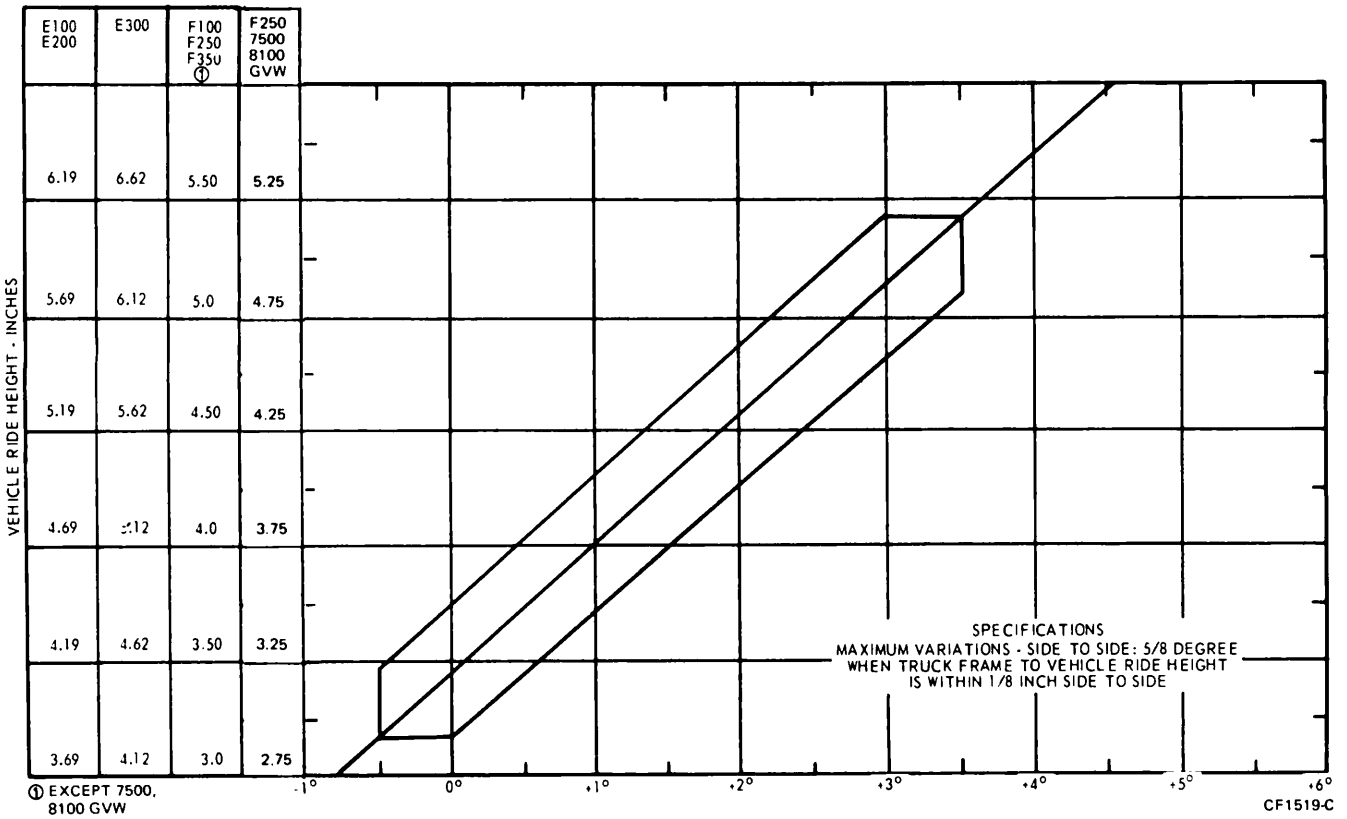

FIG. 6 Camber Angle Chart — Lt. Trucks, Econoline

sill assembly (Angle A, Fig. 7).

Alignment Adjustment

If toe alignment is not within the specified 1/32 inch out to 7/32 inch in (F-Series) and 3/32 inch out to 5/32 inch in (E-Series) dimension, adjust as follows:

1. Loosen the clamp bolts at each end of the spindle connecting rod tube.
2. Rotate the tube until the correct toe alignment of 3/32 inch in (F-Series) or 1/32 inch in (E-Series) preferred is obtained. Tighten the clamp bolts. Recheck the toe alignment to make sure no changes occurred as the bolts were tightened.
3. Position the clamps 3/16 inch from the end of the rod. On F-100 through F-350, F-100 (4 x 4) and Bronco models, tighten the clamps with the bolts vertical and forward of the rod with the nuts facing downward.

F-100, 4-WHEEL DRIVE — BRONCO

The caster and camber angles are designed into the front axle and cannot be adjusted. The checking procedure, use of specified blocks and determination of frame angle also apply to front drive axle vehicles.

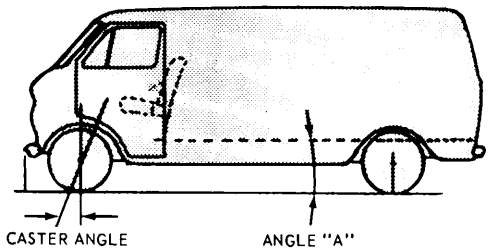

MODEL E100-E300 TRUCKS

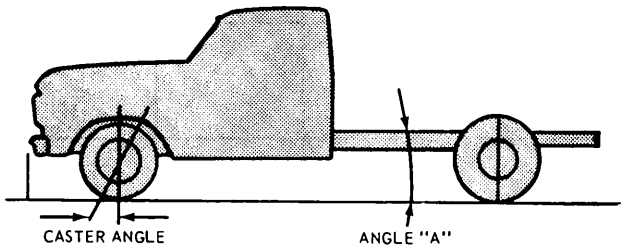

MODEL F100-F350 TRUCKS

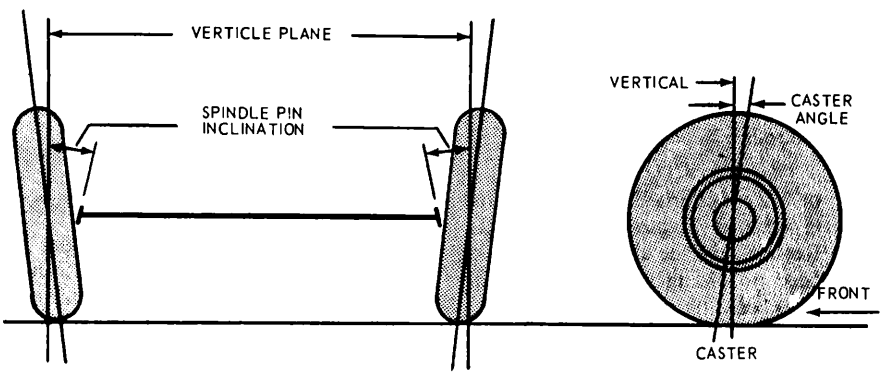

F1520-B

FIG. 7 Front End Alignment Data — Lt. Trucks, Econoline

ADJUSTMENTS

FRONT WHEEL ALIGNMENT ADJUSTMENTS

After front wheel alignment factors have been checked make the necessary adjustments.

F-100, F-250, F-350, ECONOLINE, F-100 4-WHEEL DRIVE, BRONCO

The camber and caster angles are designed into the front axle and cannot be adjusted.

F-250 4-WHEEL DRIVE

The camber angle is designed into the axle and cannot be adjusted. The caster angle is adjusted with shims. Refer to the caster adjustment for 500 thru 9000 Series.

ALL SERIES — 500 THRU 9000

Camber

Camber can be adjusted by bending the front axle beam. Fig. 8 shows the tool installation for increasing the camber angle. Fig. 19 shows the tool installation for decreasing the camber angle.

In all cases, the bend should be made between the front spring pad and the spindle. Otherwise, the spring pads will be thrown out of parallel with each other.

When making camber adjustments with this type of tool, pull the bottom of the jack forward as the pressure is

applied, so that the tool hangs at about the same angle as the spindle bolt (caster angle). This will prevent fore and aft bends from occuring in the axle beam. **Use a combination of blocks or shims that holds the tool in the best position.**

Do not heat the axle to bend it. Pads should be used to prevent tool marks.

Caster

The caster angle is controlled by the angle of the front spring pads, and changes as the load on the front axle increases or as the springs sag. The spring pads must be parallel to each other. Any change in the caster angle results from a twisted axle or spring sag.

If the springs have sagged, the caster angle can be adjusted by replacing the springs or by installing tapered wedges between the springs and the spring pads. Use only one wedge per side. The wedges are available in different thicknesses. Position the thick edge of the wedge toward the rear of the vehicle to increase the caster, or toward the front to decrease the caster. **When installing wedges, be sure that the front spring tie bolts extend through the wedge and into the axle pilot hole.**

Toe

If the toe is incorrect, loosen the clamp bolts at each end of the spindle connecting rod tube. Rotate the tube until the correct toe is obtained, and torque the clamp bolts to 31-42 ft.-lb. Recheck the toe to make sure that no changes occurred when the bolts were tightened.

STEERING STOP ADJUSTMENTS — TWIN-I-BEAM VEHICLES

All Twin-I-Beam vehicles except F-250 (6200 and 6900 GVW with BX or disc brakes) and F-350 (with BX or disc brakes) have built in steering stops. These F-250 and F-350 vehicles have non-adjustable stops.

Changing tire sizes may necessitate plug substitution.

STEERING STOP ADJUSTMENTS — ALL EXCEPT TWIN-I-BEAM VEHICLES

To avoid tire and/or steering linkage damage, the steering stop adjustments should be checked periodically, and adjusted if necessary. There are two separate adjustments which should be performed depending on the type of steering on the vehicle.

SPINDLE ARM AND PITMAN ARM STOP ADJUSTMENTS

Fig. 10 shows the position of the front wheels when checking the stop adjustment angles shown in the specification charts at the end of this Part.

Manual, Integral or Semi-Integral Power Steering Gear Manual, Integral Power Steering Gear

The following spindle stop adjustment is the only one required:

1. Raise the front of the vehicle until the wheels clear the floor.
2. Set spindle stop bolts to obtain specified angle.

Linkage Type Power Steering

1. Raise both front wheels off the ground by jacking under the axle.
2. Screw both Pitman arm stop bolts (Fig. 11) away from the Pitman arm to prevent contact with the Pitman arm prior to the spindle stops contacting the axle.
3. Start the engine and adjust each spindle stop to obtain the specified turn angle.
4. When the wheel is at each stop, screw the Pitman arm stop bolt in to contact the Pitman arm.
5. Return the wheels to straight ahead position, then turn each Pitman arm stop bolt two turns toward the Pitman arm. Tighten each Pitman arm stop bolt lock nut.

FRONT END GENERAL INSPECTION

ALL EXCEPT F-100 4-WHEEL DRIVE AND BRONCO

Do not check and adjust front wheel alignment without first making the following inspection for front end maladjustments, damage or wear.

1. Check the air pressure in all the tires. Make sure that the pressures agree with those specified for the tires and vehicles model being checked.
2. Raise the front of the vehicle off the floor. Grasp each front tire at the front and rear, and push the wheel inward and outward. If any free play is noticed between the brake drum and the brake carrier plate, adjust the wheel bearings. Replace the bearings if they are worn or damaged. Adjust and/or replace worn or damaged bearings as outlined in Group 11.
3. Grasp each tire at the top and bottom, and shake the wheel while watching the movement of the brake carrier plate. If the brake backing plate moves more than 1/32 inch at the outer edge or the spindle pin is loose in the I-Beam, rebush the spindles as outlined in the Front Suspension Part of this Manual.
4. Check all steering linkage for wear or maladjustment. Adjust and/or replace worn plates as outlined in Group 13.
5. Check the steering gear mounting bolts, and torque them wherever required. Check the front spring clips (U-bolts) and the spring tie bolt, and tighten them if necessary.
6. Spin each front wheel with a wheel spinner, and check and balance each wheel as required.
7. Rotate each front wheel slowly, and observe the amount of lateral or side runout. If the wheel runout exceeds 1/8 inch, replace the wheel or install the wheel on the rear. On a vehicle with cast wheels, runout can usually be corrected by loosening the rim clamp nuts and retightening them alternately and evenly. Then torque the nuts to specifications.

F-100 4-WHEEL DRIVE AND BRONCO

The following front end general inspection should be performed before adjusting toe-in or if steering or handling difficulties and/or excessive tire wear are encountered.

1. Check the air pressure in all the tires. Make sure that the pressures agree with those specified for the tires used.
2. Raise the front of the vehicle off the floor. Grasp each front tire at the front and rear, and push the wheel inward and outward. If any free play is noticed between the brake drum and the brake backing plate, adjust the wheel bearings. Replace the bearings if they are worn or damaged. Adjust and/or replace worn or damaged bearings as outlined in Group 11.
3. Check all steering linkage for wear or maladjustment. Adjust and/or replace worn parts as outlined in Group 13.
4. Check the torque on the steering gear mounting bolts and tighten if required.
5. Rotate each front wheel and tire slowly, and observe the amount of lateral or side runout. If the wheel and tire runout exceeds .080 inch, deflate the tire and rotate the tire on the wheel approximately 90 degrees. Thoroughly soap the wheel rim and reinflate the tire to the specified pressure for the respective tire size used. Recheck radial and lateral runout.

6. Inspect the radius arm to be sure they are not bent or damaged. Inspect the bushings at the radius arm to frame and radius arm to axle attachments for wear or looseness. Repair or replace parts as necessary.

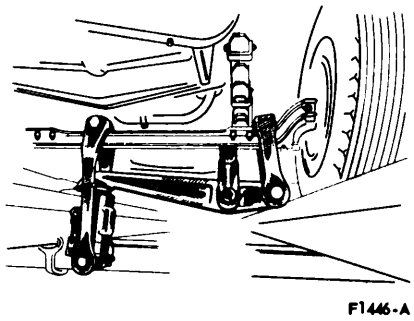

FIG. 8 Tool Installation for Camber Increase

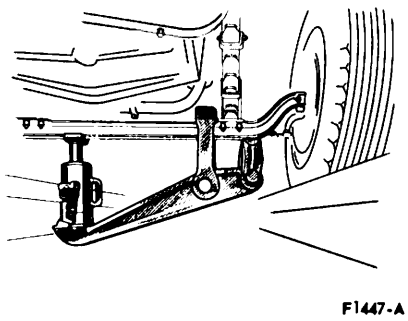

FIG. 9 Tool Installation for Camber Decrease

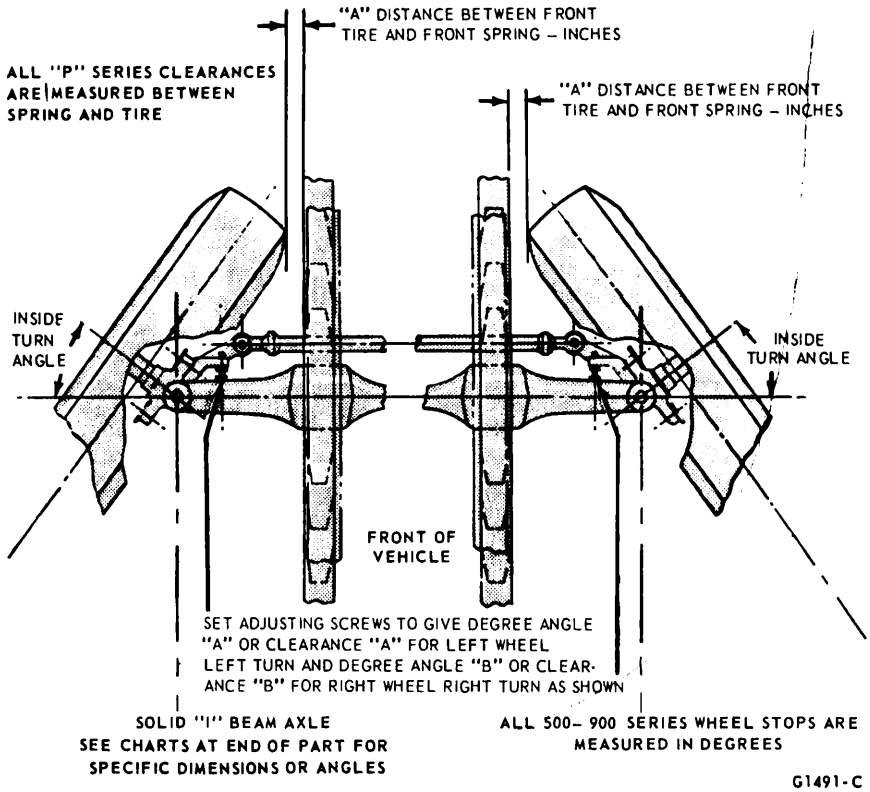

FIG. 10 Spindle Arm Stop Adjustment—All Except Twin-I-Beam Vehicles

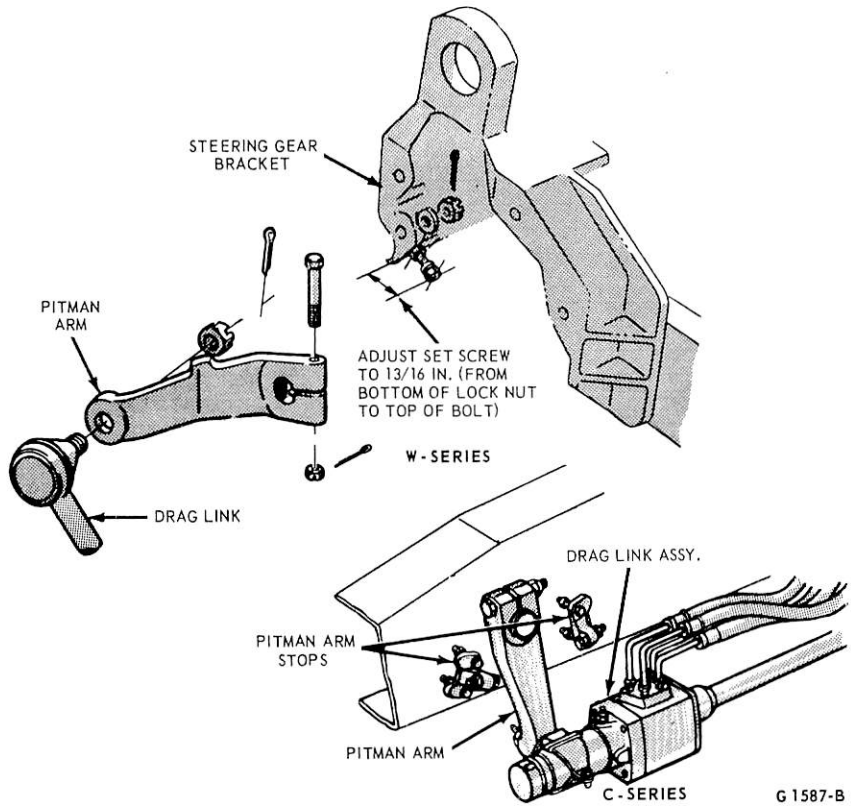

FIG. 11 Pitman Arm Stops—W-C-Series

SPECIFICATIONS

FRONT WHEEL ALIGNMENT–LT. TRUCKS (4 x 4) –P-SERIES-BRONCO

Vehicle Model	Front Axle Capacity	Alignment Factors	Minimum	Maximum	Maximum Variation Between Wheels	Optimum Resetting Specifications Desired Alignment
F-250	3000	Caster ①	+3 1/2°	+4 1/2°	1/2°	+4°
(4-Wheel Drive)	3500	Camber ②	+ 1°	+ 2°	1/2°	1 1/2°
		Toe	1/16 Inch In	1/4 Inch In		5/32 Inch
		King Pin Angle				7 1/2°
F-100 ①②	3000	Caster ①	+ 2 3/4°	+ 4 1/4°	1/2°	3 1/2°
(4-Wheel Drive)		Camber ②	+ 1°	+ 2°	1/2°	1 1/2°
Bronco ①②	3000	Toe	1/16 Inch In	1/4 Inch In		5/32 Inch
		King Pin Angle				8 1/2°
P-350		Caster	+3 3/4°	+5 1/4°	1/2°	+4 1/2°
	3800	Camber	+3/8°	+7/8°	1/2°	+5/8°
P-3500		Toe	1/16 Inch In	3/16 Inch In		1/8 Inch
		King Pin Angle				4 1/2°
P-400	3800	Caster	+2 3/4°	+4 1/4°	1/2°	+3 1/2°
P-500	4700	Camber	0°	+1°	1/2°	+1/2°
P-4000	3800	Toe	1/16 Inch In	3/16 Inch In		1/8 Inch
P-5000	4700	King Pin Angle				4 1/2°

① Manual or Power Steering

The caster specifications shown are with the frame level from front to rear. Measure front to rear frame angle when checking alignment and compensate as follows. If the front of the frame is lower than the rear, the actual caster angle is obtained by adding the frame angle to the caster angle shown on the checking equipment. If the front of the frame is higher than the rear, subtract the frame angle from the caster angle shown on the checking equipment.

The radius of both front tires must be equal within 1/8 inch. Radius to be checked from center line of spindle to the ground.

② Not adjustable.

FRONT WHEEL ALIGNMENT–LT. TRUCK (4 x 2)–ECONOLINE

Vehicle	Caster ①	Camber 1
E-300 ③	+2-1/2° to +7-1/2°	+1/2° to +3-1/2°
E-100,200 ③	+ 3 1/2° to + 8 1/2°	
F-100,F-250, F-350 ②	+ 3 1/2° to + 8 1/2°	
Max. variation between wheels when frame to ground measurement is within 1/8 inch from side to side.	1-1/2°	5/8°

① All vehicles with normal operating attitudes.

② Toe-in range for these vehicles is 1/32" out to 7/32"in. ③ Toe range for these vehicles is 3/32" out to 5/32" in.

FRONT WHEEL TURN ANGLES (DEGREES) 500–9000 SERIES TRUCKS

Model	Axle Capacity (Lbs)	Tire Size	Power Steering ①	Manual Steering ①
C-Series	6000,7000	All	49	49
	9000	All	37	37
	12000 C.P.	All	Not Applicable	31
	12000	All	37	37
	15000	All	37	37
LN-500-750	5000,5500	All	44	44
	6000,7000	All	40	40
	9000	All	31	31
F & B-500	5000,5500	7.50, 8.25 x 20	44	44
750		9.00 x 20	34	34
	6000,7000	All	40	40
	9000	All	31	31
W-WT Series	12000	10.00 x 20	37	37
	15000	11.00 x 20	34	34
	12000 C.P.	All	Not Applicable	29
L-LT-LTS-LN-LNT	6000,7000	All	42	42
800-9000	9000	All	42	42
	12000	All	40	40
	16000,18000	11.00,12.00 x 20	40	40
	20000	15.00,16.50,18.00 x 22.5	34	34
	12000 Steer-Ease	All	34	34
F-600 (4 x 4)	7500	All	40	40

① Right and Left Wheel

CF1714-C

FRONT WHEEL ALIGNMENT SPECIFICATIONS–500-9000 MEDIUM, HEAVY AND EXTRA HEAVY TRUCKS

CAMBER (DEGREES)						
			Vehicle Empty No Payload		Vehicle Loaded	
Vehicle Model	Front Axle Capacity		Min.	Max.	Min.	Max.
All	5000, 5500, 6000, 7000		+1/4	+1	0	+3/4
All except L-LT-LTS-LN-LNT-800-9000	9000, 12000 Conventional	Left	0	+3/4	–1/4	+1/2
		Right	–1/2	+1/4	–3/4	0
	12000 Center Point	Left	+1/8	+7/8	0	+3/4
		Right	–3/8	+3/8	–1/2	+1/4
	15000		+1/4	+1	0	+3/4
L-LT-LTS-LN-LNT-800-9000	9000, 16000, 18000, 20000		+1/4	+1	0	+3/4
F-600 (4 x 4)	7500		+1/2	+1-1/2	+3/8	+1-3/8
L-LT-LTS-LN-LNT-800-9000	12000 Conventional, 12000 Steer-Ease		+1/4	+1	+1/8	+7/8

TOE-IN (INCHES)					
		Vehicle Empty		Vehicle Loaded	
Model	Front Axle Capacity	Min.	Max.	Min.	Max.
All except W-Wt with 12000 C.P.	5000, 5500, 6000, 7000, 12000 Center Point	3/16	5/16	1/16	3/16
All Except L-Series with 12000 Conventional, 12000 Steer-Ease	9000, 12000 Conventional, 12000 Steer-Ease, 15000, 16000, 18000, 20000	5/16	7/16	1/16	3/16
L-Series	12000 Conventional, 12000 Steer-Ease	3/16	5/16	0	1/8
W-WT-9000	12000 Center Point ①	3/16	11/16	1/16	9/16
F-600 (4 x 4)	7500	1/16	3/16	1/16	3/16

① No part of the tie rod clamp bolt or nut must be in the area between 10 and 2 o'clock.

CASTER (DEGREES) MAXIMUM VARIATION BETWEEN WHEELS 1/2° ①					
		Vehicle Empty No Payload		Vehicle Loaded	
Vehicle	Front Axle Capacity and Type of Steering	Min.	Max.	Min.	Max.
F-B-500-750	All, Manual or Power	+3	+4	+3-1/2	+4-1/2
LN-500-750	All, Manual or Power	+4	+5	+3-1/2	+4-1/2
All C-CT Series	6000, 7000, 9000, 12000 Conventional, 15000 with Manual or Power	+2-1/2	+3-1/2	+2-3/4	+3-3/4
	12000 Center Point	0	+1	-1-1/2	-1/2
L-LT-LTS-LN-LNT-800-9000	6000, 7000 with Manual or Power	+3-1/4	+4-1/4	+2-3/4	+3-3/4
	9000	+3-1/2	+4-1/2	+2-3/4	+3-3/4
	12000 Conventional, 12000 Steer-Ease	+1-15/16	+3-1/16	+1/8	+7/8
	16000, 18000, 2000 with Power	+3	+4	+2-3/4	+3-3/4
W-WT-9000	12000 Conventional, 15000 with Manual or Power	+3	+4	+2-3/4	+3-3/4
	12000 Center Point	0	+1	-1-1/2	-1/2
F-600 (4 x 4)	7500 Manual or Power	+2-1/2	+3-1/2	+2-3/4	+3-3/4

① The caster specifications shown are with the frame level from front to rear. Measure front to rear frame angle when checking alignment and compensate as follows.
If the front of the frame is lower than the rear, the actual caster angle is obtained by adding the frame angle to the caster angle shown on the checking equipment.
If the front of the frame is higher than the rear, subtract the frame angle from the caster angle shown on the checking equipment.

PART 14-20 Front Suspension — Solid I - Beam

Does Not Apply To Twin I-Beam, 4-Wheel Drive Vehicles

COMPONENT INDEX	Page	COMPONENT INDEX	Page
FRONT AXLE		FRONT SUSPENSION	
Description	20-01	Description	20-01
FRONT SHOCK ABSORBER		FRONT WHEEL SPINDLE	
Description	20-01	Removal and Installation	20-05
Removal and Installation	20-07	SPECIFICATIONS	20-08
FRONT SPRING		SPINDLE BUSHING	
Removal and Installation	20-01	Removal and Installation	20-07
FRONT SPRING SHACKLE AND BUSHING			
Installation	20-07		

DESCRIPTION

FRONT SUSPENSION

Semi-elliptic, leaf-type front springs are used on all vehicles. The springs are mounted to the frame side members, and are held in place on the axles by spring clips (U-bolts).

The front and rear ends of the springs are mounted on the frame side rails by either a locking bracket, a slipper type pad, a shackle, or a supporting bracket and rebound pin.

FRONT AXLE

The front axles are of the I-beam type with the front wheel spindles attached to the ends of the axles.

Each spindle is held in place on the axle by a spindle bolt. On models with 4000, 5000, and 5500-lb axles (except 500-900 units which use steel backed bronze bushings), Delrin bushings are pressed into the upper and lower ends of the spindle to provide bearing surfaces for the spindle bolt. A thrust bearing is installed between the lower end of the axle and the spindle to support the load on the axle. A spindle arm, to which the steering linkage is attached, is installed on each spindle.

FRONT SHOCK ABSORBER

The hydraulic shock absorbers are of the direct, double-acting type. They provide a continuous damping effect both on compression and rebound. These shock absorbers are of telescopic design with rubber grommets at the mounting points for quiet operation. Since the shock absorbers are sealed, non-adjustable units, they must be replaced as complete assemblies.

REMOVAL AND INSTALLATION

FRONT SPRING

P-SERIES

Removal and Installation

1. Raise the vehicle frame until the weight is off the front springs with the wheels still touching the floor. See Group 50 for hoisting instructions.
2. Remove the spring clips (U-bolts and nuts) and the spring clip plate (Fig. 1).
3. Remove the nut from the spring to frame bracket bolt and drive the bolt out of the spring and bracket with a drift.
4. Remove the nut from the lower shackle bolt, and drive the bolt out of the spring and shackle bars.
5. Remove the grease fittings from the shackle bolts.
6. Remove the spring, noting the position of any caster wedges.
7. If required, install new bushings in the spring and shackle bracket.
8. Install the caster wedges if so equipped. Position the wedges with the thick edges in the same direction as they were before removal. Install the spring on the spring seat.
9. Position the spring eye between the shackle bars, and install the lower shackle bolt and nut (Fig. 1). Do not torque.
10. Position the spring eye in the bracket and install the bolt through the bracket and spring, with the bolt head toward the outside of the

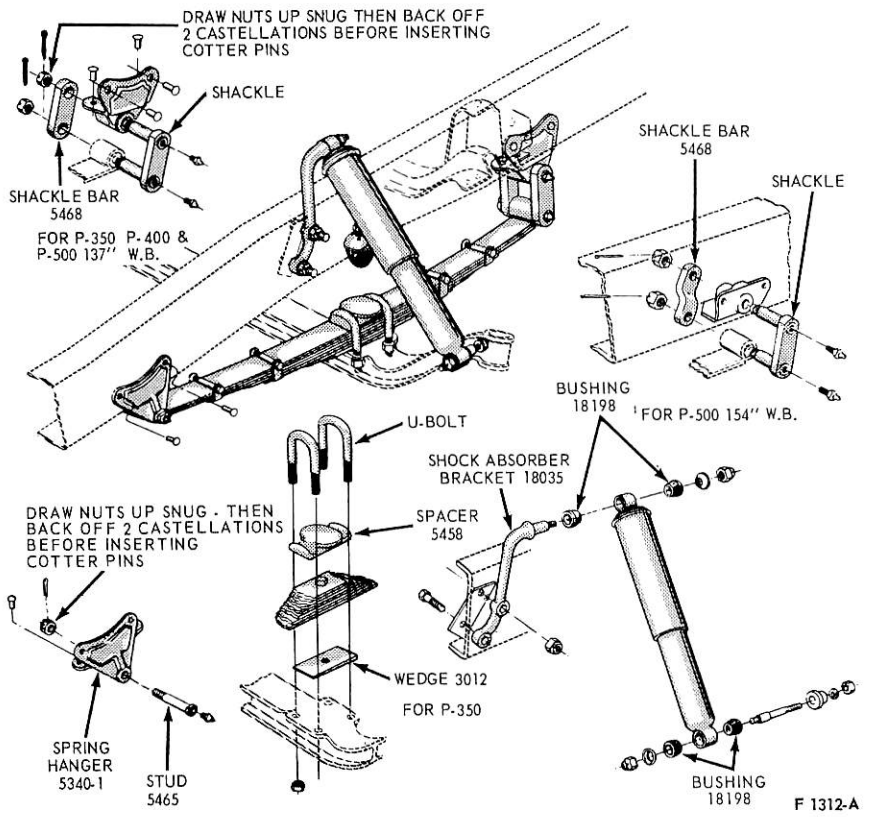

FIG. 1 Standard Front Spring—P-Series (Optional Similar)

vehicle. Install but do not torque the nuts.

11. Install the grease fittings in the shackle bolts.
12. Place the spring clips in position over the spring clip plate and through the holes in the axle. Make sure that the spring tie bolt is centered in the recess in the axle.
13. Install the spring clip nuts and lower the vehicle to the floor.
14. Torque the lower shackle nut, spring bracket nut, and spring clip nuts to specifications in that order.

LN-500-750 SERIES

Removal and Installation

1. Raise the vehicle frame until the weight is off the front springs, with the wheels still touching the floor. Remove the shock absorber.
2. Remove the cotter pin from the support bracket stud and remove the stud from the front bracket.
3. Remove the cotter pin and nut from the rear bracket shackle pin and drive out the pin (Fig. 2).
4. Remove the nuts from the 2 spring clips (U-bolts) which hold the spring on the axle (Fig. 2). Remove the spring, noting the position of any caster wedges.

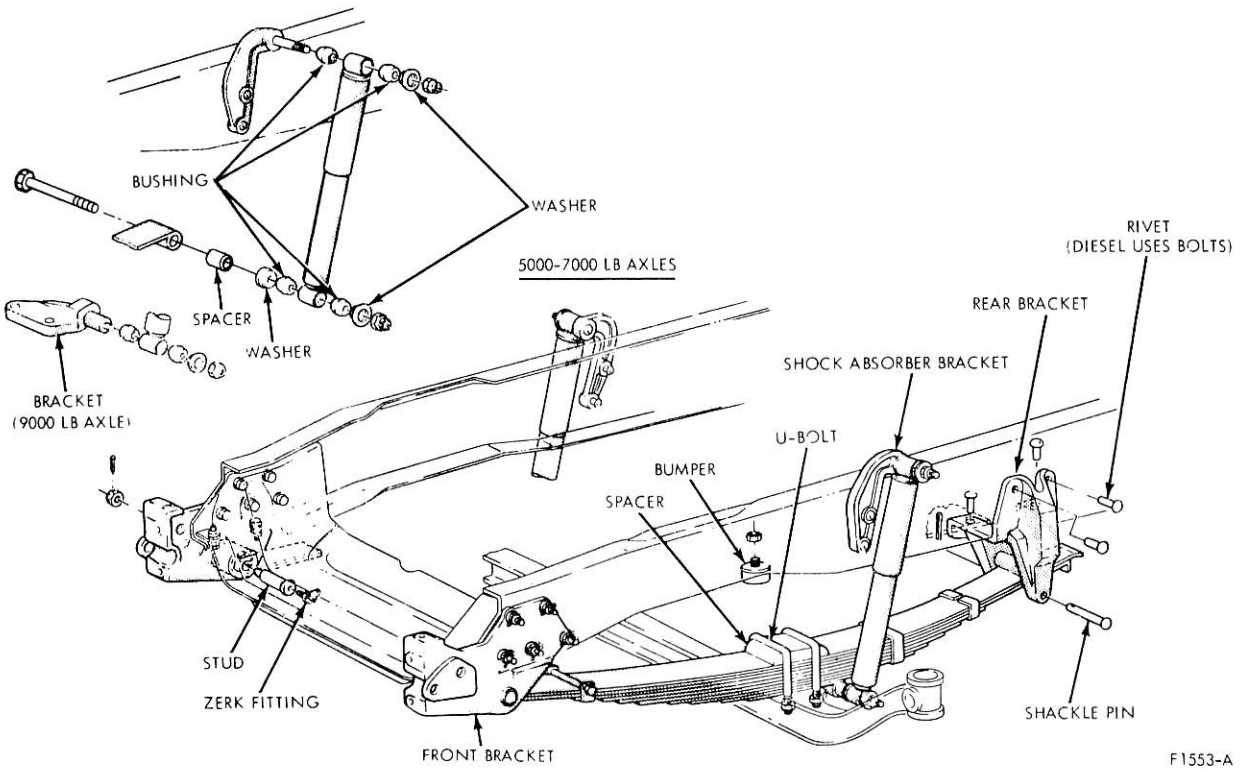

FIG. 2 Front Spring—LN-500-750, 6000-7000

5. Position the spring on the spring seat and align the spring eye with the front spring bracket (Fig. 2).
6. Prior to installation, coat the bushing with C1AZ-19590-B lube. Drive the stud through the bracket and the eye of the spring. The lubrication opening in the stud should face inward.
7. Install the attaching nut.
8. Tighten the nut to 31-42 ft-lb, then back it off two castellations. Install a new cotter pin.
9. Install the lubrication fitting.
10. Raise the opposite end of the spring leaf into the supporting bracket, then install the pin in the bracket. Secure the pin with a cotter pin.
11. On a vehicle with axle caster wedges, place the wedges between the axle and the spring, with the thick edges positioned the same as they were originally. Place the spring clips in position over the spring clip plate and through the holes in the axle. Make sure that the spring tie bolt is centered in the recess of the axle.
12. Install the nuts on the spring clips. Lower the vehicle to the floor and torque the spring clip nuts to specifications. Lubricate front shackle pin.

F-B-500-750 SERIES

Removal and Installation

1. Raise the vehicle frame just enough to remove the weight from the front spring while the front wheel still contacts the floor.
2. Support the front axle to remove the weight from the spring U-bolts.
3. Remove the four U-bolt nuts and the two U-bolts (Fig. 3).
4. Remove the cotter pin, nut, washers and bolt that secure the spring to the rear hanger.
5. Remove the cotter pin from the front spring hanger pin and remove the pin.
6. Lift the spring from the axle and front hanger.
7. Position the spring in the front hanger and on the axle.
8. Install the front spring hanger pin and cotter pin.
9. Position the axle so that the spring through-bolt enters the locating hole in the axle.
10. Install the two U-bolts making sure that the front one enters the shock absorber lower bracket. Install the nuts. Torque to specification.
11. Raise or lower the axle as required to align the spring eye with the bolt hole in the rear bracket. Install the bolt, washers and nut making sure the one washer is between the nut and bracket and one between the bolt head and bracket. With the weight of the vehicle on the springs, torque the rear hanger bolt nut to specification and advance to the next castellation if necessary to install cotter pin.
12. Lower the vehicle and remove the jacks.

L-LT-LN-LNT-800-900, 8000-9000, C-CT AND W-SERIES

Removal and Installation

1. Raise the vehicle until the weight is off the front springs, with the wheels still touching the floor. Remove the shock absorber, if so equipped.
2. Remove the bolt that secures the spring retaining pin in the front bracket (Figs. 4, 5 and 6).
3. Remove the retaining pin from the front bracket.
4. Remove the four through bolts and then the two shackle pins securing the shackle assembly. Remove the shackle from the spring and rear bracket.
5. Remove the two U-bolts that attach the spring to the axle.
6. Lift the spring from the axle being careful not to lose the wedges or spacer.
7. Position the spring on the spring seat and align the spring front eye with the spring bracket (Figs. 4, 5 and 6).
8. Remove the lubrication fitting from the retaining pin. Position the pin so that the notches are aligned with the attaching bolt holes in the front bracket, and the lubricator opening facing outward. Drive the pin through the bracket and spring, then

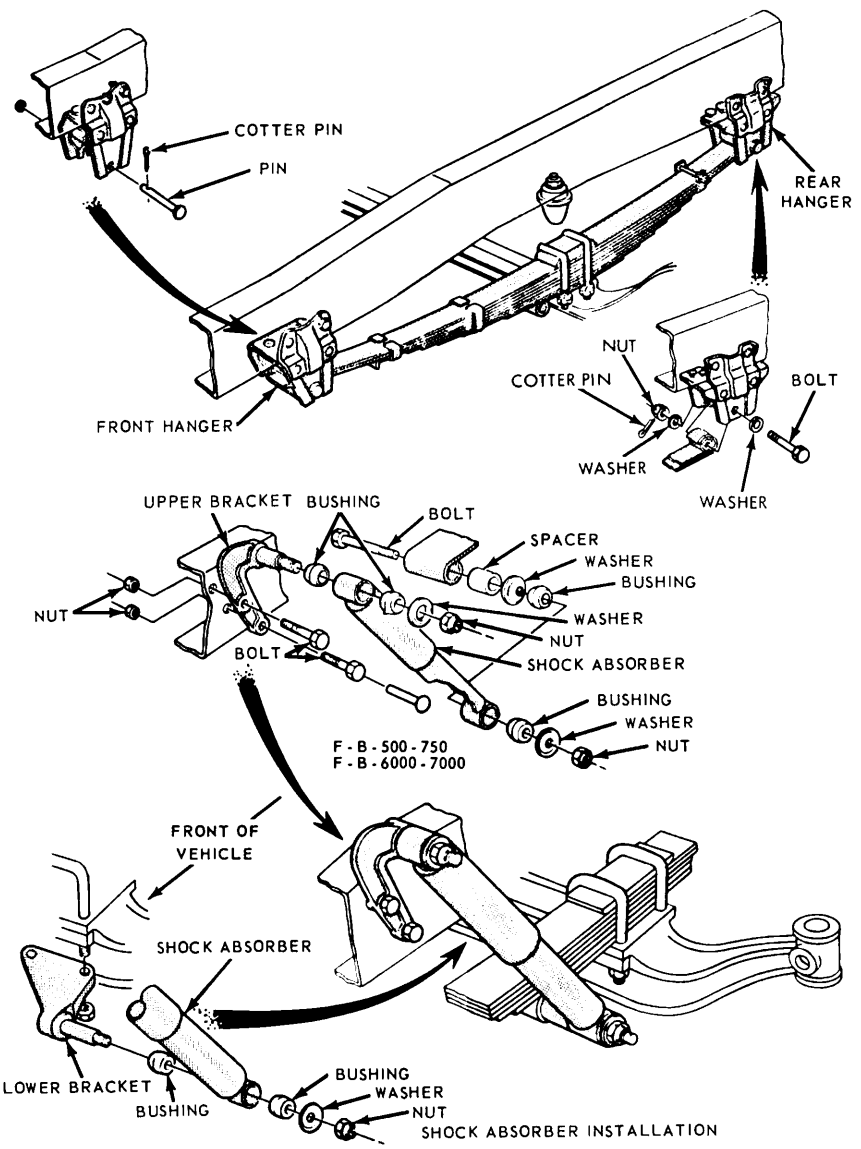

F-750 & F-7000 (CAT. ENG.) W 9000 LB. AXLE F1471-B

FIG. 3 Front Spring Installation—F-B-500-750

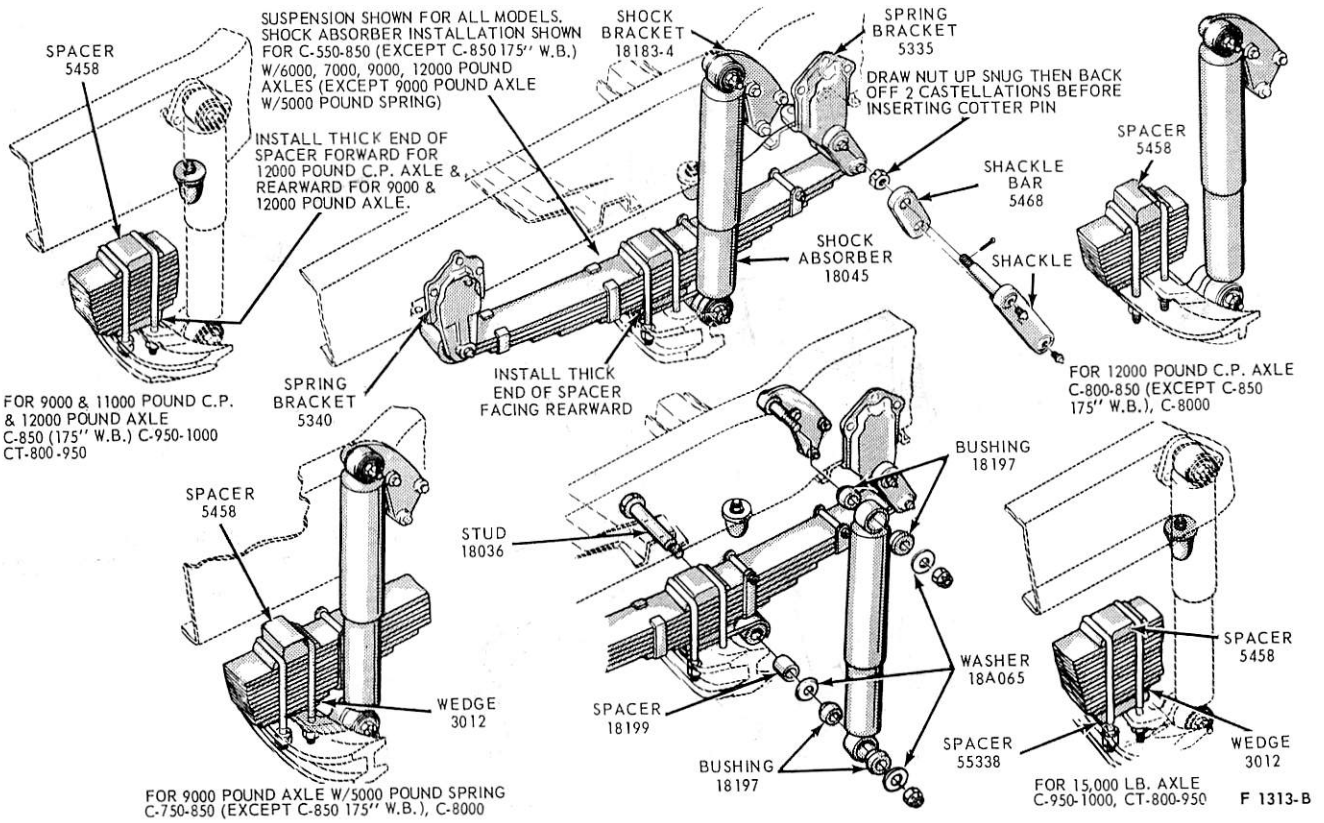

FIG. 4 Front Spring—C-Series

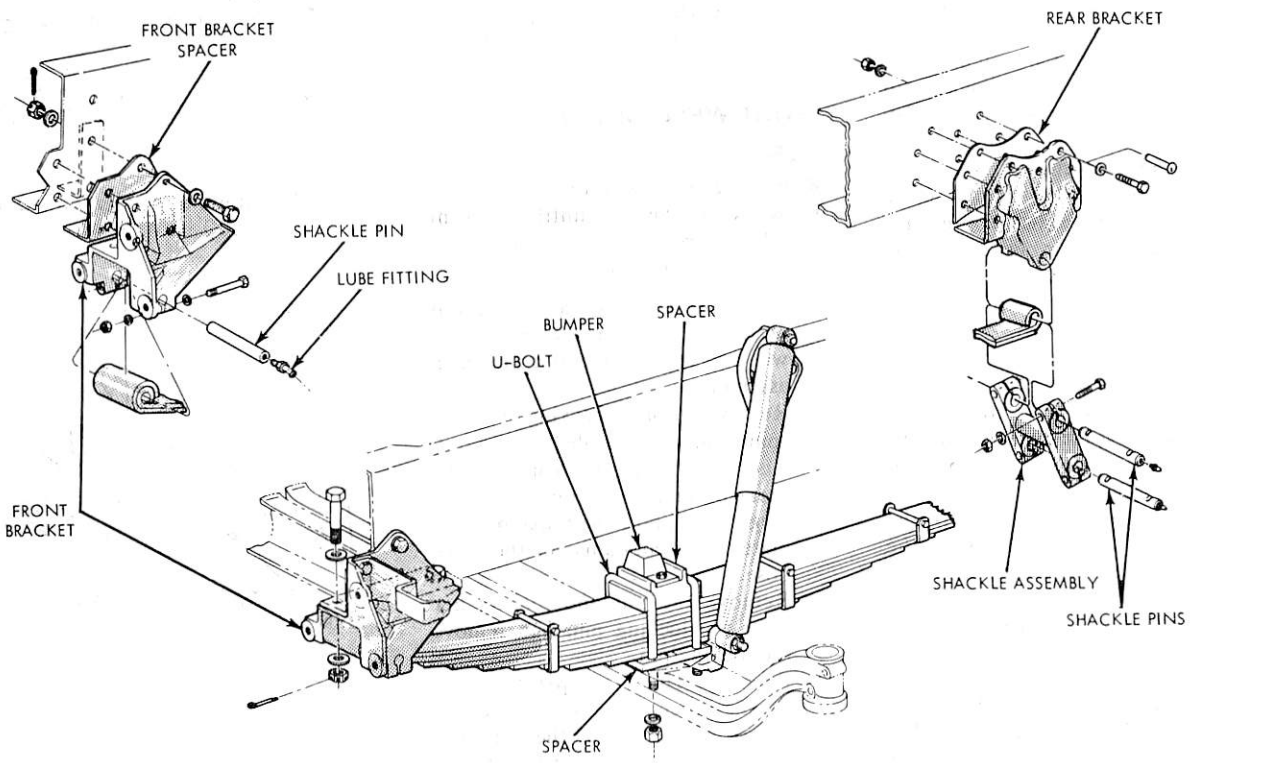

FIG. 5 Front Spring—L-LT-LN-LNT-800-900, 8000-9000

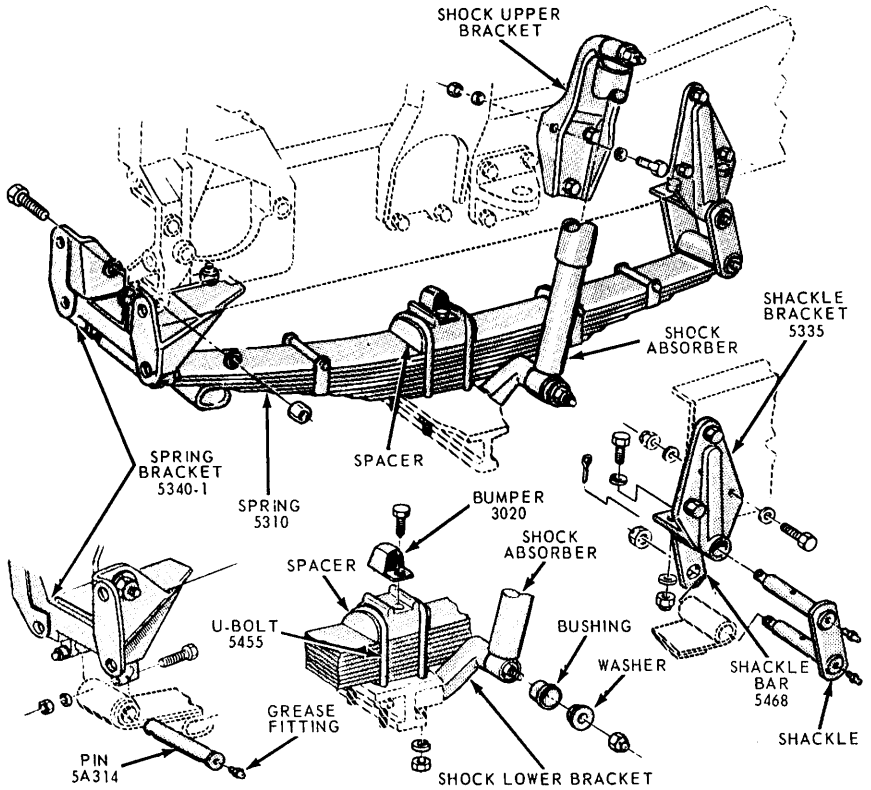

FIG. 6 Front Spring—W-Series

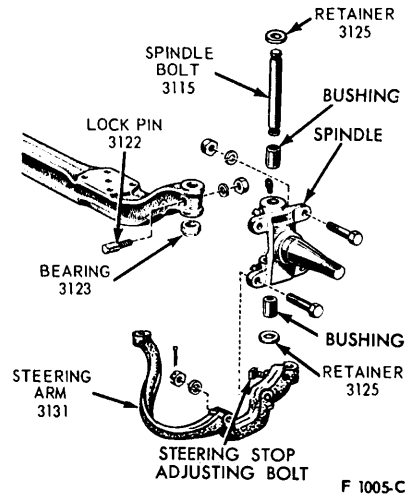

FIG. 7 Spindle Installation—P-350-3500-400-4000 (P-500-500 Similar)

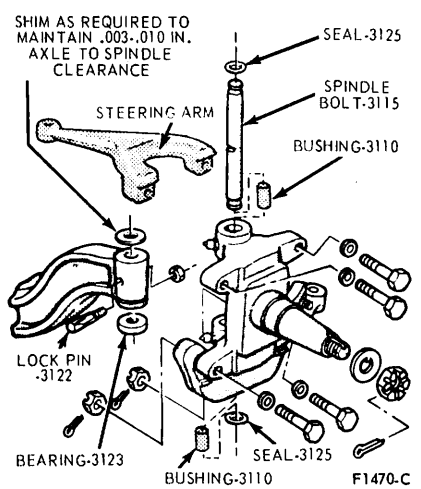

FIG. 8 Spindle Installation—5000-5500 Lb Axles

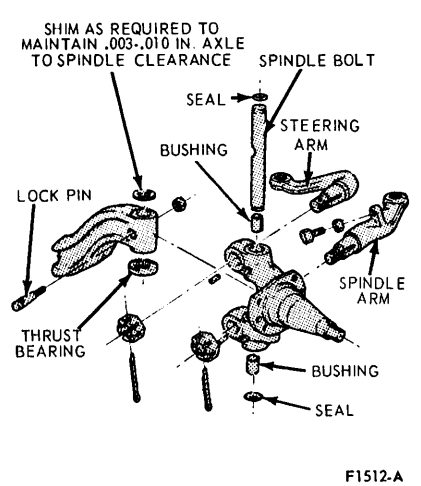

FIG. 9 Spindle Installation—6000-7000 Lb Axles—Except C-Series

install the attaching bolts, lockwashers, and nuts. Install the lubrication fitting in the pin.

9. Raise or lower the rear end of spring as required to insert the shackle into the spring eye and rear bracket. Tap on the shackle until it bottoms in the spring and bracket.
10. Position the shackle assembly so the notches on the shackle pins are aligned with the through bolts. The lubricating openings face outward. Install the through bolt nuts and torque to 31-42 ft-lb.
11. On vehicles equipped with a spacer, place it on the axle.
12. On vehicles equipped with a caster wedge, place it on the axle with the thick edge in the same position as it was originally.
13. Position the spring clips over the spring clip plate and through the holes in the axle. Make sure the spring tie bolt is centered in the recess of the axle, spacer or caster wedge.
14. Install the shock absorber lower bracket to the underside of the axle (except as shown in Fig. 4) so that the spring clip (U-bolt) ends enter the holes in the bracket. Install the flat washers and lock nuts on the spring clips.
15. Lower the vehicle to the floor and torque the spring clip nuts to specification. Lubricate the shackle bolts.

FRONT WHEEL SPINDLE

P-SERIES

Removal and Installation

1. Raise the vehicle until the front wheel clears the floor and place a support under the axle.
2. Back off the brake adjustment if necessary, and remove the wheel, wheel bearing, hub and drum as an assembly.
3. Remove the brake backing plate and spindle arm-to-spindle bolt and nut. Remove the spindle arm and the brake backing plate from the spindle (Fig. 7). Support the brake backing plate to prevent damaging the brake hose.
4. Remove the nut and lockwasher from the locking pin, and remove the locking pin.
5. Remove the top spindle bolt retainer; then, drive the spindle bolt out from the top of the axle and remove the spindle and bearing (Fig. 7).
6. Make sure the spindle bolt hole in the axle is free of nicks, burrs or

foreign material. Coat the spindle bolt bushings and the spindle bolt hole in the axle with oil, and place the spindle in position on the axle.

7. Pack the spindle bolt bearing with chassis lubricant and insert the spindle bolt bearing between the bottom of the axle and the spindle with the open end of the bearing seal facing downward.
8. Install a new retainer at the top of the spindle bolt, and install the spindle bolt in the spindle with the locking pin notch in the spindle bolt lined up with the locking pin hole in the axle. Drive the spindle bolt through the axle until the spindle bolt retainer is seated against the spindle.
9. Install a new locking pin after making sure the notch in the spindle bolt is lined up with the locking pin hole in the axle. Install the locking pin lockwasher and nut, and torque the nut to specification. Install a new retainer at the bottom of the spindle bolt.
10. Install the brake backing plate and spindle arm. Torque the brake backing plate and spindle arm-to-spindle bolt and nut to specification, and advance the castellated nut as required for installation of the cotter pin.
11. Install the wheel, hub and drum assembly, and adjust the wheel bearing as outlined in Part 11-02.
12. Lubricate the spindle bolt.
13. Check and, if necessary, adjust toe-in.

MEDIUM, HEAVY AND EXTRA HEAVY TRUCKS

Removal and Installation

1. Loosen the front wheel hub bolt nuts. Raise the front of the vehicle and remove the wheel.
2. Remove the hub and drum and the wheel bearing from the spindle.
3. If the brake backing plate is bolted to the spindle, remove the plate from the spindle. To prevent damage to the brake hose, hang the backing plate from the frame.
4. Disconnect the spindle arms from the spindle.
5. On all 5000, 5500, 6000 and 7000 lb axles (the latter two not including C-Series), remove the seal (O-ring) from the top of the spindle bolt, remove the nut from the spindle bolt lock pin (Figs. 8 and 9) and drive the lock pin out of the axle. Drive the spindle bolt out from the top of the axle with a suitable drift (Fig. 10).

On 9000, 12000 (Center Point), 12000, 16000, 18000 and 20000 lb axles, three separate spindle top mountings are used. Vehicles equipped with cambrakes and either a 9000 or 12000 lb axle utilizes a three-bolt cap/zerk fitting with a gasket (Fig. 11). Hydraulic or wedge brake units with 9000 or 12000 lb axles have a combination brake hose fitting/zerk cap (Fig. 11). The 12000 (Center Point), 16000, 18000 and 20000 lb axles have a brake hose fitting cap without the zerk (an extra zerk fitting is mounted on the upper part of the spindle on these axles). See Fig. 11. After removing the appropriate cap and gasket, remove the snap ring and expansion plug from the bottom of the spindle bolt. A spacer is also present only on vehicles with 12000 lb axles immediately below the bushing. Drive out the staked lock pins with a suitable tool; then, drive out the spindle from the top of the axle (Fig. 10).

On 15000 lb axles, remove the dust seal cap, gasket and spacer from the top of the spindle. Remove the retainer and expansion plug from the bottom of the spindle (Fig. 12). Remove the cotter pin and spindle bolt retaining nut. Drive out the tapered spindle bolt from the top of the axle (Fig. 10).

6. Remove the spindle assembly from the axle.
7. To assemble, place the spindle in position on the axle. Insert the spindle bolt thrust bearing between the bottom of the axle and the spindle. Pack the thrust bearing and coat all mating surfaces of spindle and axle parts with M1C75-B lubricant prior to assembly. **On all axles, the thrust bearing must be installed with the retainer lip facing down.** The shim (or shims) is placed between the top of the axle and the spindle. A .003-.010 axle-to-spindle clearance must be maintained on all axles.

On 5000 and 5500 lb axles, line up the notch in the spindle with the spindle bolt locking pin hole in the axle (Fig. 8). The spindle bolt must be installed with the end marked T facing upward. Drive the spindle bolt through the axle until the notch and hole are in line. Fasten the spindle bolt in place by installing a new locking pin from either side of the I-Beam; then, install the nut on the lock

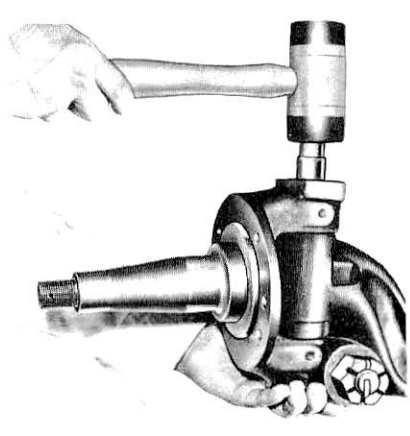

FIG. 10 Removing Spindle Bolt—Typical

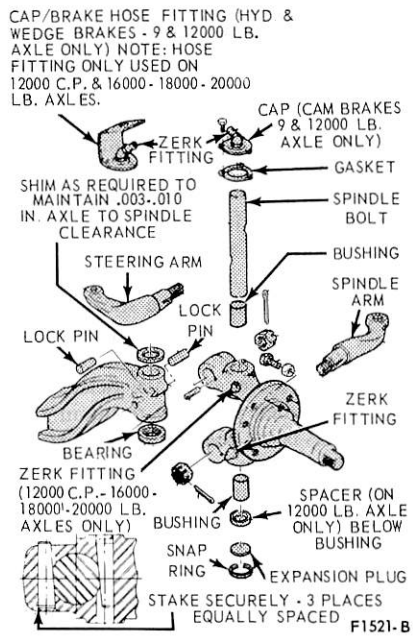

FIG. 11 Spindle Installation—9000,12000 (Center Point), 12000,16000,18000 and 20000 Lb Axles

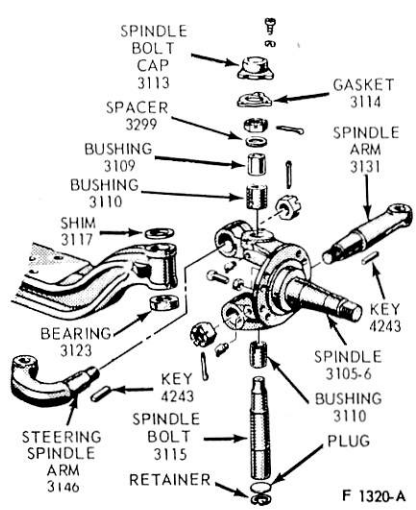

FIG. 12 Spindle Installation—15000 Lb Axle

pin. Install a new seal (O-ring) in the groove at each end of the spindle bolt.

On 6000 and 7000 lb axles, line up the notch in the spindle bolt with the spindle lock pin hole in the axle (Fig. 9). The spindle bolt must be installed with the end marked T facing upward. Drive the spindle bolt through the axle until the notch and hole are in line. Fasten the spindle bolt in place by installing a new lock pin from either side of the I-Beam; then, install the nut on the lock pin. Install a new seal (O-ring) in the groove at each end of the spindle bolt.

On 9000, 12000 (Center Point), 12000, 16000, 18000 and 20000 lb axles, line up the notches in the spindle bolt with the spindle lock pin holes in the axle (Fig. 11). Drive the spindle bolt through the axle until the notches and holes are in line. This spindle design uses two non-threaded spindle lock pins per spindle bolt. On the 9000 lb axle, the upper and lower pins are the same size while all other axles use a short pin in the upper hole and a longer pin in the lower hole. These pins are available with three different length flats. Select the pins that, when inserted, result in the round ends being below the axle surface a maximum of approximately 1/8 inch. All pins must be installed from opposite sides of the axle and secured by prick punching the edge of the hole in three equally spaced places. Install a new expansion plug and lock ring. Install the gasket and upper cap.

On 15000 lb axles, the tapered spindle bolt must be installed from the underside of the spindle. Install a new spacer and bushing at the top of the spindle upper bushing (Fig. 12). Install the spindle retaining nut and cotter pin; then, install a new expansion plug and snap ring at the bottom of the spindle and the dust seal cap and gasket at the top.

8. Install the brake backing plate on the spindle. On 5000-5500 lb axles, make certain hardened flat washers of the same type are installed between the backing plate and the attaching bolt heads (Fig. 8). On 6000 lb and larger axles, install the spindle arms before installing the brake backing plate.
9. Lubricate the spindle bushings until lubricant is visible at the spindle-to-axle area.
10. Install the hub and drum assembly and the wheel. Adjust the wheel bearings as outlined in Part 11-02.
11. Check and adjust the toe-in.

FRONT SHOCK ABSORBER

Removal and Installation

To replace the front shock absorber, remove the selflocking nut, steel washer, and rubber bushings at the upper and lower ends of the shock absorber. Remove the shock absorber.

When installing a new shock absorber, use new rubber bushings. Position the shock absorber on the mounting brackets with the large diameter at the top.

Install the rubber bushing, steel washer, and self-locking nut. Tighten the nut until it rests against the shoulder of the stud. Torque to specification.

FRONT SPRING SHACKLE AND BUSHING

W-SERIES

Installation

When replacing front spring bushings on subject vehicles (three required each side; both front and rear spring eyes and rear shackle bracket), the following steps must be performed:

1. Ream all bushings to 1.005 inch after eye and bracket installation (Fig. 13).
2. Install a new shackle assembly.
3. Torque the shackle pin retaining nuts to 30-40 ft-lb.
4. Install a new front spring pin.
5. Make certain the lubrication fittings are properly installed. Lubricate with C1AZ-19590-B lubricant.

SPINDLE BUSHING

Removal and Installation

1. On a spindle with bronze bushings, drive the bushing out of the spindle (Fig. 14) with a tool that is slightly smaller than the spindle bore. If a tool is not available, carefully drive a small center punch between the bushing and the spindle, at the split side of the bushing. Collapse the bushing, and remove it from the spindle bore.
2. Clean the spindle bores thoroughly, and make certain that the lubricating holes are not plugged.
3. Position a new bushing in the spindle bore with the lubricating hole in line with the lubricating fitting and the open end of the oil groove toward the axle. Drive a bronze bushing into the spindle (Fig. 15) with a driver that pilots in the bushing. It is not necessary to drive a Delrin bushing into place.

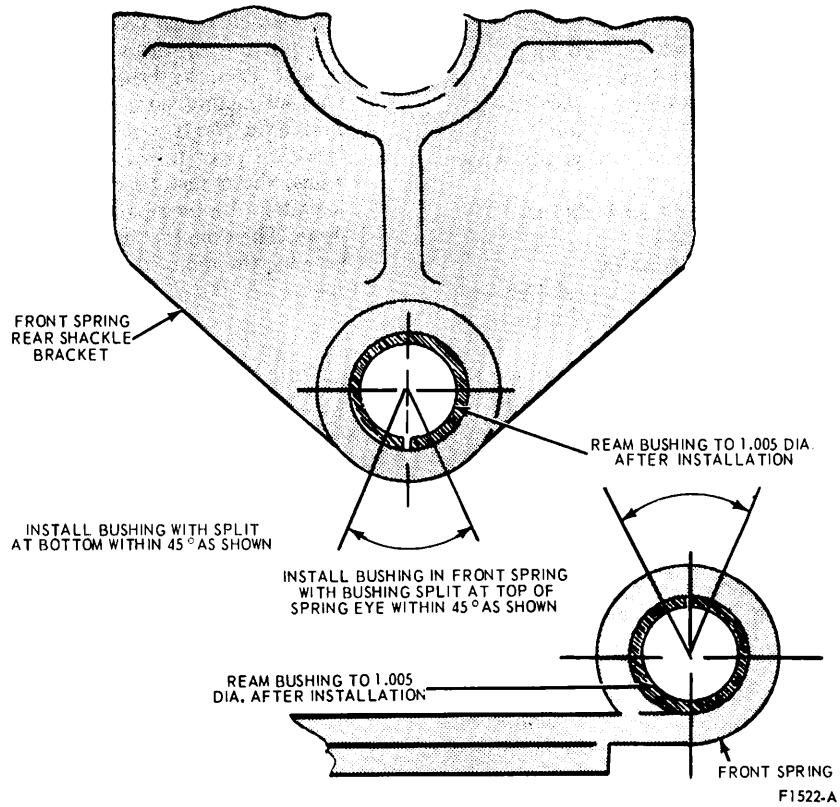

FIG. 13 Front Spring Bushing Installation

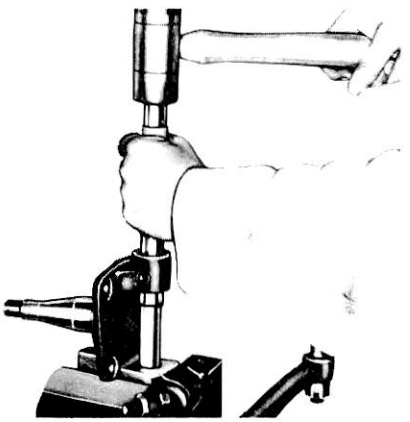

F1453-A

FIG. 14 Removing Bronze Bushing

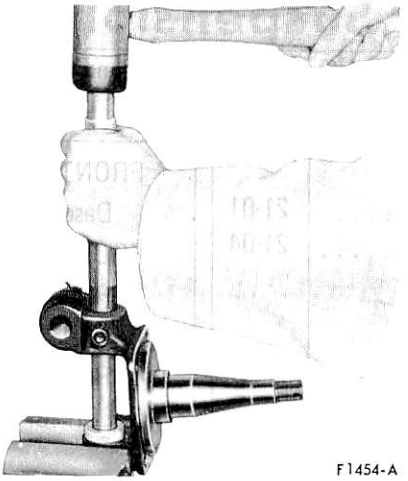

F1454-A

FIG. 15 Installing Bronze Bushing

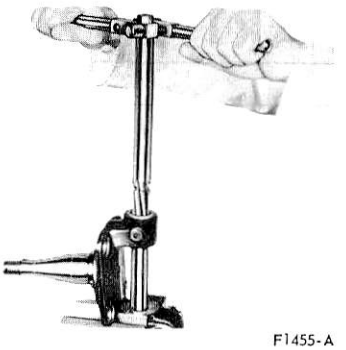

F1455-A

FIG. 16 Reaming Bronze Bushing

4. Install the remaining bushing in the same manner.
5. Bronze bushings should be reamed .001 to .003 inch larger than the diameter of a new spindle bolt (Fig. 16). **Do not ream Delrin bushings.**
6. Clean all the metal shavings from bronze bushings after reaming, and coat the bushing and pin with lubricant prior to assembly.

When a front or rear spring bushing is replaced on vehicles with steel backed bronze bushings, the split in the bushing must be installed directly opposite to the loaded side of the spring.

The bushing should be reamed .005 to .012 inch larger than the diameter of a new spring pin. After reaming, clean and coat the bushing and pin with C1AZ-19590-B lubricant prior to assembly.

SPECIFICATIONS

FRONT SUSPENSION TORQUE LIMITS—P-SERIES

Description	Ft-Lb	Description	Ft-Lb
Front Spring to Axle U-Bolt	100-120	Front Wheel Spindle Nut & Retainer	①
Radius Arm to Bracket	80-120	Front Shock Mounting to Axle-Lower	35-45
Spring Retainer to Upper Spring Seat	18-25	Front Shock to Upper Bracket	35-45

① Torque to 40-55 Ft Lbs while rotating drum. If necessary, back off adjusting nut to next castellation to line up slot in nut with cotter pin hole in spindle. Back off two additional castellations and insert cotter pin.

FRONT SUSPENSION TORQUE LIMITS—500-9000 SERIES

Description	Bolt, Nut Size or Model	Ft-Lb
Shock Absorber to Upper and Lower Bracket	B-F-500-7000	31-42
	LN-500-7000, L-LT-LTS-LN-LNT	
	800-9000	50-70
	C-Series 1/2-20	42-58
	5/8-11	110-150
	W-Series	85-115
Rear Bracket to Frame	LN-500-7000	75-105 ①
	L-LT-LTS-LN-LNT-Series	150-205
U-Bolt Nuts	B-F-500-7000	110-150
	LN-500-7000	110-120
Shackle Through Bolt Nut	L-LT-LTS-LN-LNT-Series	31-42
Front Bracket to Frame	LN-500-7000	75-105 ①
	L-LT-LTS-LN-LNT Series	150-205 ①
	C-Series	85-115
	W-Series	80-100
Shock Absorber to Spring	B-F-500-7000, 3/4-10	110-150
	LN-500-7000 5/8-11	75-105
Stud Nut	LN-500-7000	31-42
Upper Shcok Bracket to Frame	L-LT-LTS-LN-LNT-Series	75-105
U-Bolt to Spring Assembly to Axle Assembly to Lower Shock Bracket	5/8-18 C-Series	155-195
	3/4-16	290-350

① Torque to specification and advance to next castellation if necessary to insert cotter pin.

All other torque limits are determined by the following bolt or nut diameters:

Dia. (inches)	Torque Limit
1/4	85-115 (In-Lb)
5/16	12-17 (Ft-Lb)
3/8	31-42 (Ft-Lb)
7/16	50-70 (Ft-Lb)
1/2	75-105 (Ft-Lb)
9/16	110-150 (Ft-Lb)
5/8	150-205 (Ft-Lb)
3/4	220-300 (Ft-Lb)
7/8	360-480 (Ft-Lb)
1.0	540-730 (Ft-Lb)

PART 14-21 Front Suspension—Twin I-Beam

Applies To F-100, 250, 350 (4 x 2) and Econoline Only

COMPONENT INDEX	Page	COMPONENT INDEX	Page
FRONT AXLE		FRONT SUSPENSION	
Description	21-01	Description	21-01
Removal and Installation	21-04	FRONT WHEEL SPINDLE	
FRONT SHOCK ABSORBER		Removal and Installation	21-03
Description	21-02	RADIUS ARM	
Removal and Installation	21-04	Removal and Installation	21-04
FRONT SPRING		SPECIFICATIONS	21-06
Removal and Installation	21-02		

DESCRIPTION

FRONT SUSPENSION

The F-100, 250, 350 and Econoline vehicles use coil springs with the two I-beam type front axles. The springs are mounted between the frame spring pocket and the axle (Fig. 1).

FRONT AXLE

The F-100, 250, 350 (4 x 2) and Econoline vehicles use two I-beam type front axles (one for each front wheel). One end of each axle is attached to the spindle and a radius arm and the other end is attached to a frame pivot bracket on the opposite side of the vehicle (Fig. 1).

Each spindle is held in place on the axle by a spindle bolt which pivots in either Delrin or bronze bushings pressed in the upper and lower ends of the

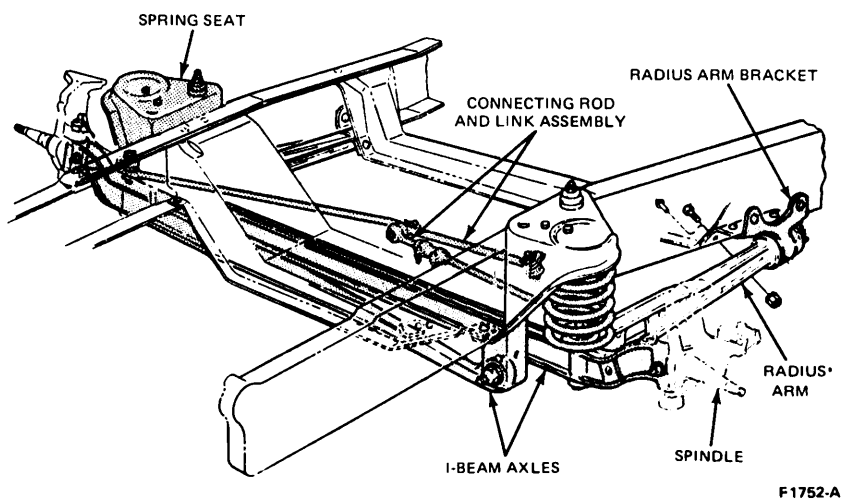

FIG. 1 Front Suspension F-100, 250, 350 (Econoline Similar)

spindle. A thrust bearing is installed between the lower end of the axle and the spindle to support the load on the axle. On E-100-200, the spindle arm is bolted on each spindle for attachment to the steering linkage. See Figure 3. The other vehicles have a spindle arm which is an integral part of the spindle (Figs. 4 and 5).

FRONT SHOCK ABSORBER

The hydraulic shock absorbers are of the direct, double-acting type. They provide a continuous damping effect both on compression and rebound. These shock absorbers are of telescopic design with rubber grommets at the mounting points for quiet operation. Since the shock absorbers are sealed, non-adjustable units, they must be replaced as complete assemblies.

REMOVAL AND INSTALLATION

FRONT SPRING

F-100-250-350

Removal and Installation

1. Raise the front of the vehicle and place safety stands under the frame and a jack under the axle. See Group 50 for hoisting instructions.
2. Disconnect the shock absorber from the lower bracket.
3. Remove one bolt and nut and remove the rebound bracket (Fig. 7).
4. Remove two spring upper retainer attaching bolts from the top of the spring upper seat and remove the retainer. On F-350 models, remove the bolts retaining the upper spring clip to the upper spring seat and remove the clip.
5. Remove the nut attaching the spring lower retainer to the lower seat and axle and remove the retainer.
6. Lower the axle and remove the spring.
7. Place the spring in position and raise the front axle.
8. Position the spring lower retainer over the stud and lower seat, and install the attaching nut.
9. Position the upper retainer over the spring coil and against the spring upper seat, and install the 2 attaching bolts.
10. Torque the upper retainer attaching bolts and lower retainer attaching nut to specification.
11. Connect the shock absorber to the lower bracket and install the rebound bracket.
12. Remove the jack and safety stands.

ECONOLINE

Removal and Installation

1. Remove the floor mat retainer from the lower end of the door opening. Fold the mat to one side to gain access to the shock absorber cover plate (Fig. 2).
2. Remove the two cover plate attaching screws and remove the plate.

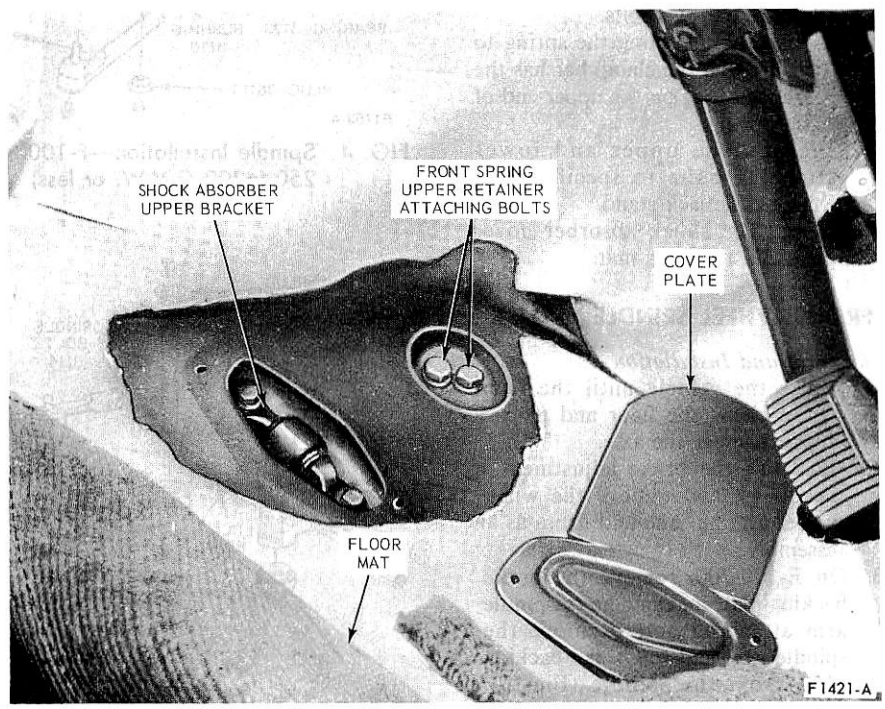

FIG. 2 Shock Absorber And Front Spring Cover Plate

3. Remove the two spring upper retainer attaching screws and remove the retainer insulator and clamp (Fig. 1).
4. Support the frame side rails with a jack stand.
5. Place a jack under the axle, then remove the spring lower retainer attaching bolt. Remove the spring support and lower retainer.
6. Lower the jack slowly to relieve the spring tension, then remove the spring.
7. Position the spring on the axle with the pigtails toward the rear (Fig. 1).
8. Position the spring lower support and retainer and install the attaching bolt loosely.
9. Position the upper insulator on the spring.
10. Raise the jack high enough to apply a light tension on the spring.
11. Install the spring upper retainer and

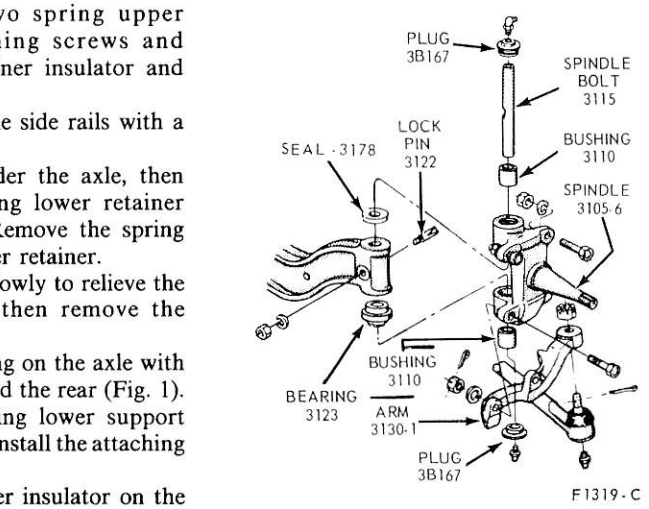

FIG. 3 Spindle Installation—E-100, E-200

the clamp in the following manner by:

a. Checking the retainer assembly to insure the bolts are approximately flush with the bottom of the clamp bar.
b. Inserting the retainer assembly into the hole in the floor with the clamp bar pointing toward the right side of the vehicle.
c. Rotating the retainer assembly approximately 90 degrees clockwise until the oval retainer seats properly to the oval hole and secure the two bolts.
d. Visually inspecting the spring to insure that the clamp bar has the trapped tang on the upper end of the spring.

12. Tighten the upper and lower attaching bolts to specification. Remove the jack stand.
13. Install the shock absorber cover plate and the floor mat.

FRONT WHEEL SPINDLE

Removal and Installation

1. Raise the vehicle until the front wheel clears the floor and place a support under the axle.
2. Back off the brake adjustment if necessary, and remove the wheel, wheel bearing, hub and drum as an assembly.
3. On E-100-200, remove the brake backing plate and spindle-to-spindle arm attaching bolt. Remove the spindle arm and the brake backing plate from the spindle (Fig. 3). Support the brake backing plate hose.
4. On F-100-250 (6200 GVW or less), remove the caliper key retaining screw. Use a brass rod and a light hammer to drive out the caliper support key and caliper support spring. It is not necessary to disconnect the hydraulic line to the caliper. Remove the caliper from the spindle by pushing the caliper downward against the spindle assembly and rotating the upper end of the caliper upward and out of the spindle assembly. Wire the caliper to a suspension component making sure the weight of the caliper is not supported by the brake hose. The brake hose must not be stretched or twisted. Disconnect the steering linkage from the integral spindle and spindle arm (Fig. 4).
5. On F-250 (over 6200 GVW) -F-350 nd E-300, disconnect the steering linkage from the integral spindle and spindle arm (Fig. 5).

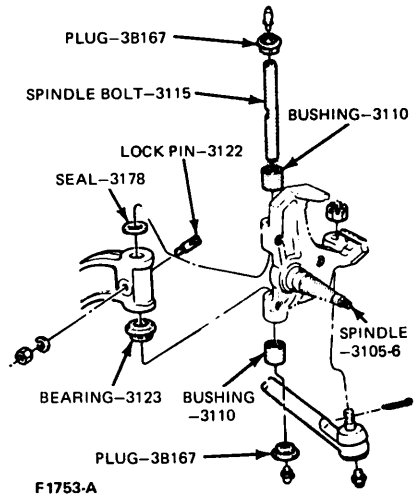

FIG. 4 Spindle Installation—F-100-250 (6200 G.V.W. or less)

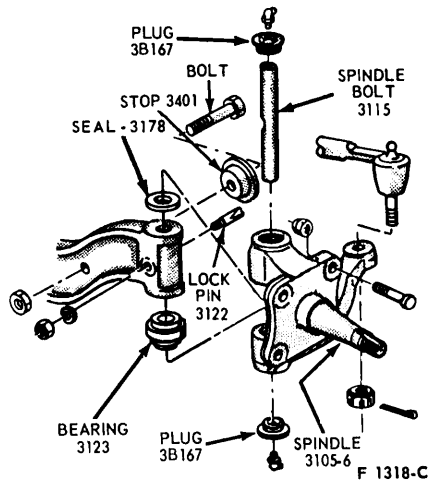

FIG. 5 Spindle Installation—F-250 (over 6200 G.V.W.) F-350, E-300

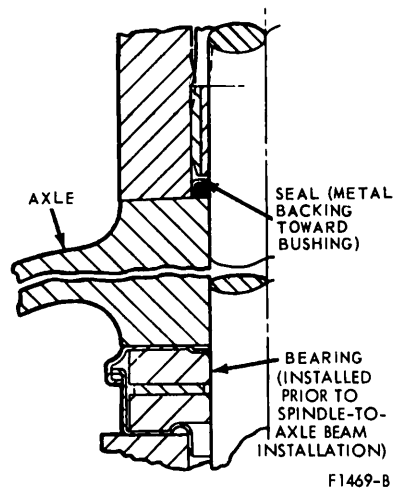

FIG. 6 Bearing Seal Installation

6. Remove the nut and lockwasher from the locking pin, and remove the locking pin.
7. Remove the upper and lower spindle bolt plugs; then, drive the spindle bolt out from the top of the axle and remove the spindle and bearing (Fig. 3). Knock out the seal.
8. Make sure the spindle bolt hole in the axle is free of nicks, burrs or foreign material. Install a new seal and coat the spindle bolt bushings and the spindle bolt hole in the axle with oil; then, place the spindle in position on the axle.
9. Pack the spindle thrust bearing with chassis lubricant and insert the bearing into the spindle with the open end (lip side) of the bearing seal facing downward into the spindle (Fig. 6).
10. Install the spindle pin in the spindle with the locking pin notch in the spindle bolt lined up with the locking pin hole in the axle. Drive the spindle bolt through the axle from the top side until the spindle bolt locking pin notch is lined up with the locking pin hole.
11. Install a new locking pin after making sure the notch in the spindle pin is lined up with the locking pin hole in the axle. Install the locking pin lockwasher and nut, and torque the nut to specification. Install the spindle bolt plugs at the top and bottom of the spindle bolt.
12. On E-100-200, install the brake backing plate and spindle arm. Torque the brake backing plate and spindle-to-spindle arm bolt and nut to specification (30-50 ft-lb). Advance the castellated nut as required for installation of the cotter pin.
13. On F-100-250 (6200 GVW or less), position the caliper on the spindle assembly about the spindle upper mounting surface. Be very careful when installing the caliper to prevent tearing or cutting the boot as it slips over the inner shoe. Use a brake adjusting tool or a screwdriver to hold the upper machined surface of the caliper against the surface of the spindle. Install the caliper support spring and caliper support key. Use a soft mallet to drive the key and spring assembly into position. Install the key retaining screw and tighten to 12-18 ft-lb. Connect the steering linkage to the spindle (all F-Series and E-300). Torque to specification (50-75 ft-lb) and advance the nut as required for installation of the cotter pin.

14. Install the wheel, hub and drum assembly, and adjust the wheel bearing as outlined in Part 11-02.
15. Lubricate the spindle assembly with ESA-M1C75B.
16. Check and, if necessary, adjust toe.

FRONT SHOCK ABSORBER

F-100-350 (4 X 2)

Removal and Installation

To replace the front shock absorber, remove the self-locking nut, steel washer, and rubber bushings at the upper end of the shock absorber. The lower end of the shock absorber is attached to a bracket (mounted on the radius arm) by a bolt and nut. Remove the shock absorber.

When installing a new shock absorber, use new rubber bushings. Position the shock absorber on the mounting brackets with the stud end at the top.

Install the rubber bushing, steel washer, and self-locking nut. Tighten the nut to torque specifications (15-25 ft-lb: upper end, 40-60 ft-lb: lower end).

ECONOLINE

Removal and Installation

1. Remove the bolt that attaches the lower end of the shock absorber to the radius arm bracket.
2. Remove the floor mat retainer from the lower end of the door opening. Fold the mat to one side to gain access to the shock absorber cover plate (Fig. 2).
3. Remove the two cover plate attaching screws and remove the plate.
4. Remove the two shock absorber bracket attaching bolts.
5. Lift the shock absorber and bracket up through the floor pan.
6. Position the shock absorber and install and tighten the two attaching bolts (Fig. 2) to specification.
7. Install the shock absorber cover plate.
8. Position the floor mat and install the retainer.
9. Connect the lower end of the shock absorber to the bracket and torque the bolt to specification.

FRONT AXLE

Removal and Installation

1. Raise the front of the vehicle until the front wheels are off the floor.
2. Remove the hub cap, hub and drum.
3. Remove the cotter pins from the spindle arm-to-spindle attaching nuts, and remove the nuts (except vehicles with integral spindle and spindle arm).
4. Remove the upper spindle to brake backing plate attaching nuts and remove the backing plate. Wire the backing plate to the under body to prevent damage to the brake hose.
5. Remove the upper and lower spindle plugs.
6. Remove the lock pin that retains the spindle bolt in the spindle.
7. Place a jack under the axle and remove the spindle bolt, spindle, and bearing from the axle.
8. Disconnect the shock absorber from the lower bracket.
9. Remove one nut and bolt and remove the rebound bracket.
10. Remove the nut attaching the spring lower retainer to the lower seat and axle and remove the retainer (Fig. 7). Then, lower the axle and remove the spring lower seat.
11. Disconnect the radius arm from the axle.
12. Remove the axle to frame pivot bracket attaching bolt and nut and remove the axle.
13. Position the axle to the frame pivot bracket and install the bolt and nut finger tight.
14. Position the radius arm to the axle and install the bolt, nut, and shim and torque to specification.
15. Position the spring lower seat over the bolt on the axle.
16. Raise the axle and position the spring to the lower seat.
17. Position the spring lower retainer over the bolt and lower seat, and install the attaching nut. Torque the nut to specification.
18. Connect the shock absorber to the radius arm bracket.
19. Torque the axle to frame pivot bolt and nut to specification.
20. Position the spindle to the axle and install the spindle pin, thrust bearing, and lock pin. Then, install the upper and lower spindle plugs.
21. Position the brake backing plate to the spindle and install the upper attaching bolts finger tight.
22. Position the spindle arm to the spindle and install the attaching bolts (except vehicles with integral spindle and spindle arm). Torque the upper and lower bolts to specification and install the cotter pins.
23. Adjust the brakes (Group 12) and install the wheel, hub, and drum on the spindle and adjust the wheel bearings.
24. Lower the truck and lubricate the steering linkage and spindle. Check toe-in and adjust as required.
25. Install the hub cap.

RADIUS ARM

Removal and Installation

1. Raise the front of the vehicle and place safety stands under the frame and a jack under the wheel or axle.
2. Disconnect the shock absorber from the radius arm bracket.
3. Remove two spring upper retainer attaching bolts from the top of the spring upper seat and remove the retainer (Fig. 7).
4. Remove the nut attaching the spring lower retainer to the lower seat and axle and remove the retainer.
5. Lower the axle and remove the spring.
6. Disconnect the steering rod from the spindle arm with Tool 3290-C.
7. Remove the spring lower seat and shim from the radius arm. Then, remove the bolt and nut attaching the radius arm to the axle.
8. Remove the cotter pin, nut and washer from the radius arm rear attachment.
9. Remove the bushing from the radius arm and remove the radius arm from vehicle.

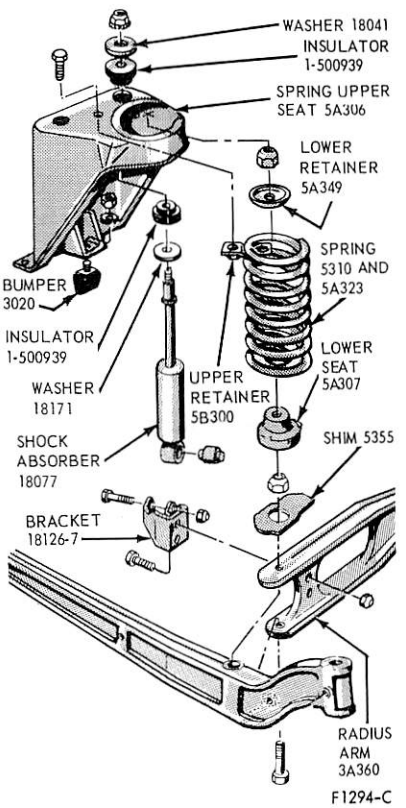

FIG. 7 Front Spring and Related Parts F-100,250 (Econoline and F-350 Similar)

10. Remove the inner bushing from the radius arm.
11. Position the radius arm to the axle and install the bolt and nut finger tight.
12. Install the inner bushing on the radius arm and position the arm to the frame bracket.
13. Install the bushing, washer, and attaching nut. Torque the nut to specification (Specifications appear at the end of the Part) and install the cotter pin.
14. Connect the steering rod to the spindle arm and install the attaching nut. Torque the nut to specification and install the cotter pin.
15. Torque the radius arm to axle attaching bolt and nut to specification.
16. Position the shim over the radius arm to axle attaching nut and install the spring lower seat (Fig. 7).
17. Place the spring in position and raise the front axle.
18. Position the spring lower retainer over the stud and lower seat, and install the attaching nut.
19. Position the upper retainer over the spring coil and against the spring upper seat, and install the 2 attaching bolts.
20. Torque the upper retainer attaching bolts and lower retainer attaching nut to specification.
21. Connect the shock absorber to the lower bracket.

Remove the jack and safety stands and lower the vehicle.

22. Check and adjust the toe if necessary.

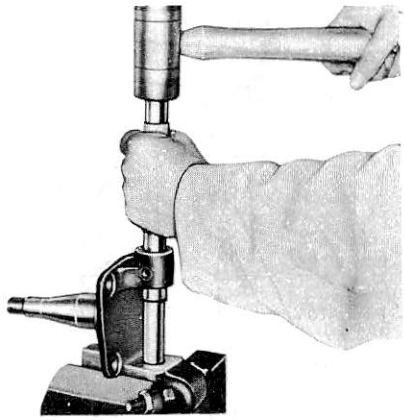

FIG. 8 Removing Bronze Bushing

SPINDLE BUSHING

Removal and Installation

1. On a spindle with bronze bushings, drive the bushing out of the spindle (Fig. 8) with a tool that is slightly smaller than the spindle bore. If a tool is not available, carefully drive a small center punch between the bushing and the spindle, at the split side of the bushing. Collapse the bushing, and remove it from the spindle bore.
2. Clean the spindle bores thoroughly, and make certain that the lubricating holes are not plugged.
3. Position a new bushing in the spindle bore with the lubricating hole in line with the lubricating fitting and the open end of the oil groove toward the axle. Drive a bronze bushing into the spindle (Fig. 9) with a driver that pilots in the bushing. It is not necessary to drive a Delrin bushing into place.
4. Install the remaining bushing in the same manner.
5. Bronze bushings should be reamed .001 to .003 inch larger than the diameter of a new spindle bolt (Fig. 10).**Do not ream Delrin bushings.**
6. Clean all the metal shavings from bronze bushings after *reaming, and* coat the bushing and pin with lubricant prior to assembly.

When a front or rear spring bushing is replaced on vehicles with steel backed bronze bushings, the split in the bushing must be installed directly opposite to the loaded side of the spring.

The bushing should be reamed .005 to .012 inch larger than the diameter of a new spring pin. After reaming, clean and coat the bushing and pin with C1AZ-19590-B lubricant prior to assembly

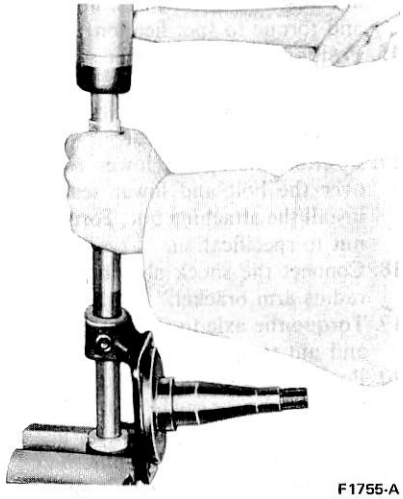

F1755-A

FIG. 9 Installing Bronze Bushing

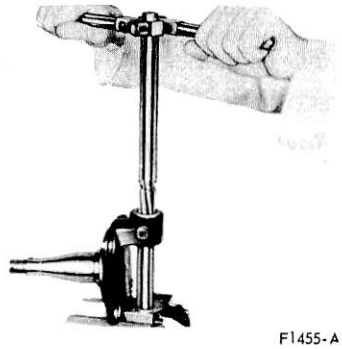

F1455-A

FIG. 10 Reaming Bronze Bushing

SPECIFICATIONS AND SPECIAL SERVICE TOOL

FRONT SUSPENSION TORQUE LIMITS—F-100 THRU F-350 (4 x 2), ECONOLINE

Description	Model	Ft-Lb
Front Jounce Bumper to Frame	Econoline, F-Series	20-30
Spring Seat & Pivot Bracket to Frame	F-100 thru F-350	30-70
Radius Arm to Bracket	F-100 thru F-350, Econoline	F-Series: 80-120; Econoline: 75-125
Front Axle to Pivot Bracket	F-Series Econoline	120-150 120-160
Radius Arm Bracket to No. 2 Crossmember	F-100, F-250	35-50
Radius Arm to Front Axle	E-100, E-200, F-100, F-250, E-300, F-350	180-220 350-500
Spring Retainer to Upper Spring Seat	F-100 thru F-350, Econoline	F-Series: 15-25; Econoline: 18-25
Front Wheel Spindle Nut and Retainer	F-Series and Econoline	①
Spindle Bolt Locking Pin	Econoline, F-Series	40-55
Front Wheel Spindle Plug	Econoline F-Series	70-80 35-50
Front Shock to Shock Bracket-Lower	Econoline, F-Series	40-60
Front Shock Absorber Stud Upper	F-Series	15-25
Front Shock Absorber Mounting-Upper	Econoline	15-20

① Torque to 17-25 Ft-Lbs while rotating drum. Install retaining nut so prong on retainer lines up with cotter pin hole in spindle. Back off both nut and retainer to second slot and insert cotter pin. Back off equivalent to 1-1/2 castellations.

SPECIAL SERVICE TOOL: Tool 3290-C, Tie Rod Ball End Remover

CF1709-C

PART 14-22 Front Suspension—4-Wheel Drive

Applies To F-100, 250 (4 x 4), Bronco Only

COMPONENT INDEX	Page	COMPONENT INDEX	Page
FRONT AXLE		FRONT SUSPENSION	
Removal and Installation	22-04	Description	22-01
FRONT SHOCK ABSORBER		FRONT WHEEL SPINDLE	
Description	22-01	Removal and Installation	22-03
Removal and Installation	22-03	RADIUS ARM	
FRONT SPRING		Removal and Installation	22-04
Removal and Installation	22-03	SPECIFICATIONS	22-04

DESCRIPTION

FRONT SUSPENSION

F-100 4-WHEEL DRIVE—BRONCO

The front suspension consists of a driving axle which is attached to the truck frame with 2 coil springs, 2 radius arms, and a track bar (Figs. 1 and 3).

The radius arms clamp around the axle tube on each side and attach to frame brackets behind the front axle. A coil spring is attached to each radius arm directly above the axle and extends to the frame spring seat (Figs. 1 and 3). The shock absorbers are attached to the frame and to brackets on the radius arm.

The track bar is used to retain the front axle in position (side to side) with respect to the vehicle frame. It is attached to a bracket on the left frame side member and extends to the right side of the axle housing.

F-250 4-WHEEL DRIVE

The front suspension consists of a driving axle which is attached to the vehicle frame with 2 semi-elliptic leaf-type springs. Each spring is clamped to the axle with 2 U-bolts (Fig. 2). The front of the spring rests in a front shackle bracket. The rear of the spring is attached to a frame spring bracket.

The shock absorbers are the direct, double-acting type. They are attached to a frame bracket at the top and to an axle bracket at the lower end.

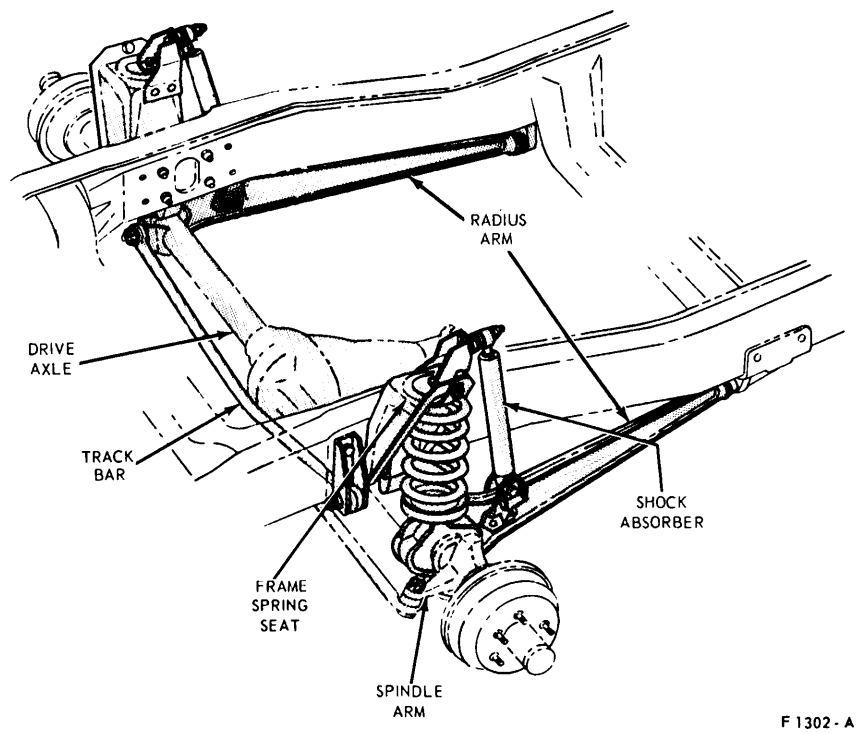

FIG. 1 Front Suspension—F-100 4-Wheel Drive

FRONT SHOCK ABSORBER

The hydraulic shock absorbers are of the direct, double-acting type. They provide a continuous damping effect both on compression and rebound. These shock absorbers are of telescopic design with rubber grommets at the mounting points for quiet operation. Since the shock absorbers are sealed, non-adjustable units, they must be replaced as complete assemblies.

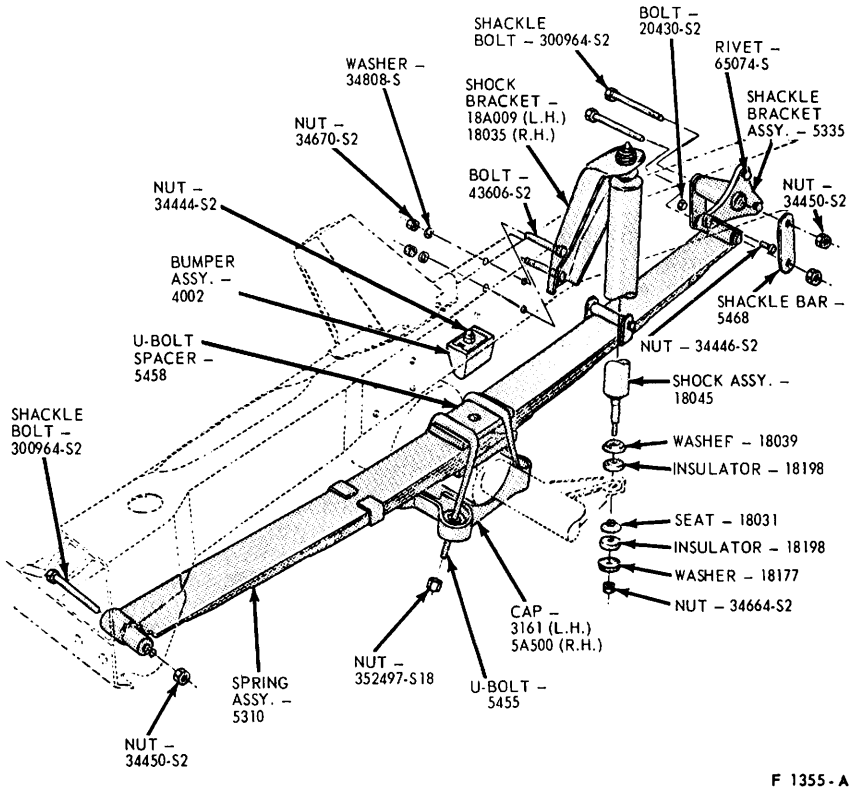

FIG. 2 Front Suspension—F-250 4-Wheel Drive

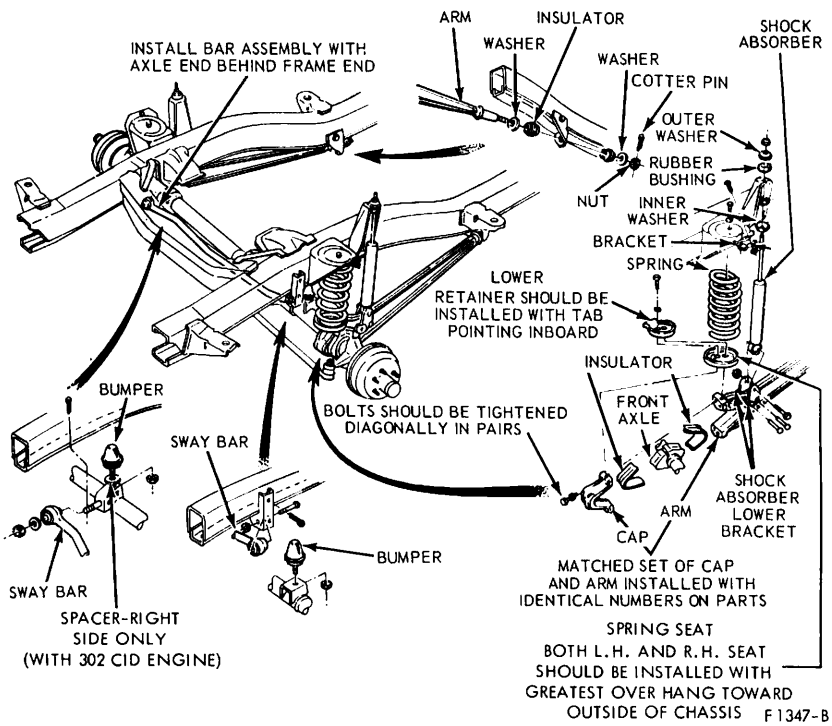

FIG. 3 Front Suspension—Bronco

REMOVAL AND INSTALLATION

FRONT SPRING

F-100 4-WHEEL DRIVE AND BRONCO

Removal and Installation

1. Raise the vehicle and remove the shock absorber-to-lower bracket attaching bolt and nut (Figs. 3 and 4). See Group 50 for Hoisting instructions.
2. Remove two spring lower retainer attaching bolts from inside of the spring coil.
3. Remove two spring upper retainer attaching bolts and nuts and remove the upper retainer.
4. Position safety stands under the frame side rails and lower the axle enough to relieve tension from the spring. Remove the spring, lower retainer and lower the spring from the vehicle.
5. Position the spring, spring lower seat, and the lower retainer to the frame spring pocket and the radius arm with the spring seat and the lower retainer positioned as shown in Figs. 3 and 4.
6. Position the upper retainer over the spring coil and loosely install the 2 attaching bolts and nuts.
7. Install the two lower retainer attaching bolts and torque to specification.
8. Tighten and torque the upper retainer attaching bolts to specification.
9. Position the shock absorber to the lower bracket and install the attaching bolt and nut. Torque the bolt and nut to specification and lower the vehicle.

F-250 4-WHEEL DRIVE

Removal and Installation

1. Raise the vehicle frame until the weight is off the front spring with the wheels still touching the floor.
2. Disconnect the lower end of the shock absorber from the axle. Remove the spring clips (U-bolts) and spring clip spacer (Fig. 2).
3. Remove the nut from the shackle bolt retaining the spring at the front. Drive out the shackle bolt.
4. Remove the nuts and shackle bar at the rear shackle bracket. Drive out the two shackle bolts and remove the spring.
5. Position the new spring on the spring seat cap and install the shackle bolts through the shackle bracket and spring.
6. Install the shackle bar and nuts on the shackle bolts. Tighten to specification (90-130 ft-lbs).
7. Position the front of the spring to allow the front shackle bolt to be installed. Install the bolt nut and tighten to specifications (90-130 ft-lb).
8. Position the spring clip spacer and place the spring clips (U-bolts) in position through the holes in the spring seat cap. Install but do not tighten the U-bolt nuts.
9. Connect the lower end of the shock absorber to the axle.
10. Lower the vehicle and torque the U-bolt nuts to specification (100-135 ft-lb).

FRONT WHEEL SPINDLE

Removal and Installation

Refer to Group 15 for spindle replacement on 4-wheel drive front axles.

FRONT SHOCK ABSORBER

F-100-250 4-WHEEL DRIVE

Removal and Installation

To replace the front shock absorber, remove the self-locking nut, steel

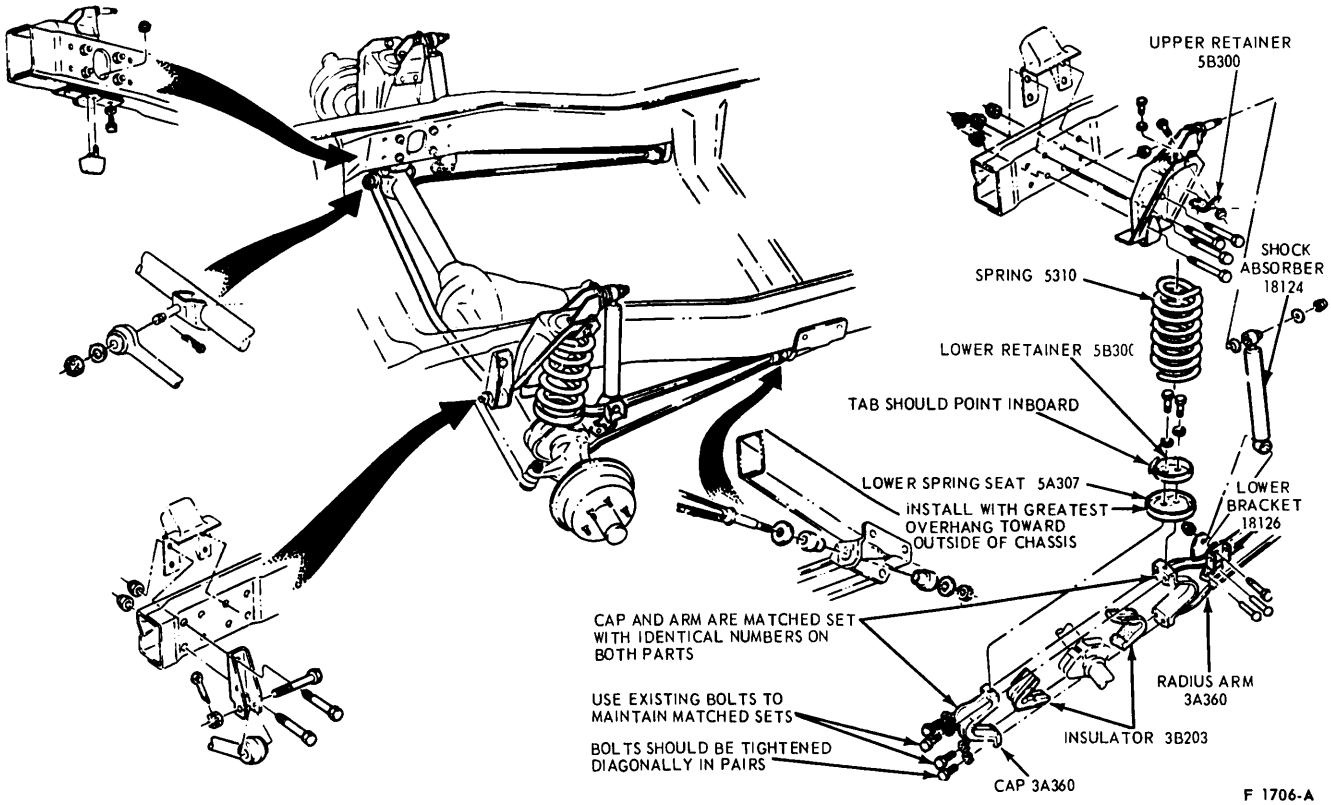

FIG. 4 Front Suspension Disassembled—F-100 4-Wheel Drive

washer, and rubber bushings at the upper and lower ends of the shock absorber except F-100-350 models. On F-100-350 models, the lower end of the shock absorber is attached to a bracket (mounted on the radius arm) by a bolt and nut. Remove the shock absorber.

When installing a new shock absorber, use new rubber bushings. Position the shock absorber on the mounting brackets with the large diameter at the top.

Install the rubber bushing, steel washer, and self-locking nut. Torque to specification.

BRONCO

Removal and Installation

1. Remove the bolt and nut attaching the shock absorber to the lower bracket on the radius arm (Fig. 3).
2. Remove the nut, washer, and insulator from the shock absorber at the frame bracket and remove the shock absorber.
3. Position the washer and insulator on the shock absorber rod and position the shock absorber to the frame bracket.
4. Position the insulator and washer on the shock absorber rod and install the attaching nut loosely.
5. Position the shock absorber to the lower bracket and install the attaching bolt and nut loosely.
6. Torque the attaching bolts and nuts to specification.

FRONT AXLE

Removal and Installation

Refer to Group 15 for front axle removal and installation procedures on 4-wheel drive vehicles.

RADIUS ARM

F-100 4-WHEEL DRIVE, BRONCO

Removal and Installation

1. Raise the vehicle and position safety stands under the frame side rails.
2. Remove the shock absorber-to-lower-bracket attaching bolt and nut (Figs. 3 and 4), and pull the shock absorber free of the radius arm.
3. Remove two spring lower retainer attaching bolts from inside of the spring coil.
4. Remove the cotter pin and nut attaching the radius arm to the frame bracket and remove the radius arm rear insulator.
5. Remove four bolts attaching the radius arm cap to the radius arm and remove the cap and insulator. **The cap and radius arm are a matched set with identical numbers (Figs. 3 and 4) on each part and should not be mixed.**
6. Move the axle forward and remove the radius arm and insulator from the axle. Then, pull the radius arm from the frame bracket.

The radius arm and cap must be identified by a T on each piece in addition to a number (1 through 100). If no T identification is found on an arm and cap, it must not be used on F-100 4-wheel drive vehicles.

7. Position the washer and insulator on the rear of the radius arm and insert the radius arm and insulator into the frame bracket.
8. Position the rear insulator and washer on the radius arm and loosely install the attaching nut.
9. Position the insulator on the axle and position the radius arm to the insulator and axle.
10. Position the front insulator to the axle and install the radius arm cap with the numbers on the radius arm and cap together. Torque the attaching bolts diagonally in pairs to specification.
11. Position the spring lower seat and retainer to the spring and axle (Figs. 3 and 4) and install the two attaching bolts. Torque the bolts to specification.
12. Torque the radius rod rear attaching nut to specification and install the cotter pin.
13. Position the shock absorber to the lower bracket and install the attaching bolt and nut. Torque the nut to specification and lower the vehicle.

SPECIFICATIONS

FRONT SUSPENSION TORQUE LIMITS—F-100 THRU F-250 (4 x 4), BRONCO

Description	Model	Ft-Lb
Front Spring to Axle U-Bolt	F-250 (4 x 4)	100-135
Front Spring Assembly to Front Hanger Bracket	F-250 (4 x 4)	90-130
Front Spring Shackle to Shackle Bracket & Spring	F-250 (4 x 4)	90-130
Front Jounce Bumper to Bracket	Bronco	30-40
Front Jounce Bumper to Frame	F-250 (4 x 4)	20-30
Shackle Bracket to Frame	F-250 (4 x 4)	20-30
Radius Arm to Bracket	Bronco, F-100 (4 x 4)	80-120
Spring Retainer to Upper Spring Seat	Bronco, F-100 (4 x 4)	Bronco: 18-25; F-100 (4 x 4). 20-30
Track Bar Pivot to Frame	Bronco, F-100 (4 x 4)	110-130
Track Bar Pivot to Axle	Bronco, F-100 (4 x 4)	155-205
Lower Spring Seat to Radius Arm	Bronco, F-100 (4 x 4)	45-55
Axle Cap to Radius Arm Assembly	Bronco, F-100 (4 x 4)	90-110
Front Shock Bracket to Frame	F-250 (4 x 4)	30-40
Front Shock to Shock Bracket-Lower	Bronco, F-100 (4 x 4)	40-60
Front Shock Absorber Stud-Upper	Bronco, F-250 (4 x 4),	15-25
Front Shock to Lower Mounting Bracket	F-250 (4 x 4)	15-25
Track Bar Bracket to Frame	F-100 (4 x 4)	(9/16-12 Nut),50-70, (7/16-14 Nut), 30-40
Front Shock Absorber to Bracket – Upper	F-100 (4 x 4)	40-60

CF1707-C

PART 14-31 Rear Suspension—Leaf Springs

COMPONENT INDEX Applies to Models as Indicated	All Models	F-100-250	F-350	E-100-200	E-300	F-100-250 (4x4), P-Series	Bronco	C-Series	L-LN-B-W-Series
REAR SPRING Removal and Installation		31-06	31-07	31-06	31-06	31-07	31-07	31-08	31-08
REAR SUSPENSION Description	31-01								
SHOCK ABSORBER Description	31-03								
Removal and Installation	31-05								
SPECIFICATIONS	31-09								
A page number indicates that the item is for the vehicle(s) listed at the head of the column.									

DESCRIPTION

REAR SUSPENSION

F-100, 250, 350 (4 X 2) AND ECONOLINE

Semi-elliptic, leaf-type springs are used for the rear axle suspension. The forward end of each spring is attached to a bracket on the frame side member. The rear end of each spring is shackled to a bracket on the frame side member. (Figs. 1, 2, 3 and 4).

Optional auxiliary rear springs are mounted on top of the main spring with free ends. These provide increased load carrying capacity and stability (Fig. 4).

ALL VEHICLES EXCEPT F-100, 250, 350, BRONCO AND ECONOLINE

Semi-elliptic, leaf-type rear springs are used on all vehicles except tandem models (Figs. 5, 6, 7 and 8). The springs are mounted to the frame side members, and are held in place on the axles by spring clips (U-bolts).

The front and rear ends of the springs are mounted on the frame side rails by either a locking bracket, a slipper type pad, a shackle, or a supporting bracket and rebound pin.

F-100 4-WHEEL DRIVE, BRONCO

Semi-elliptic, leaf-type springs are used for the rear axle suspension (Fig. 9). The front end of each spring is attached to a bracket on the frame side member. The rear end of each spring is attached to a bracket on the frame side member with a shackle. Each spring is attached to the axle with two U-bolts. A spacer is located between the spring and the axle to obtain a level ride position.

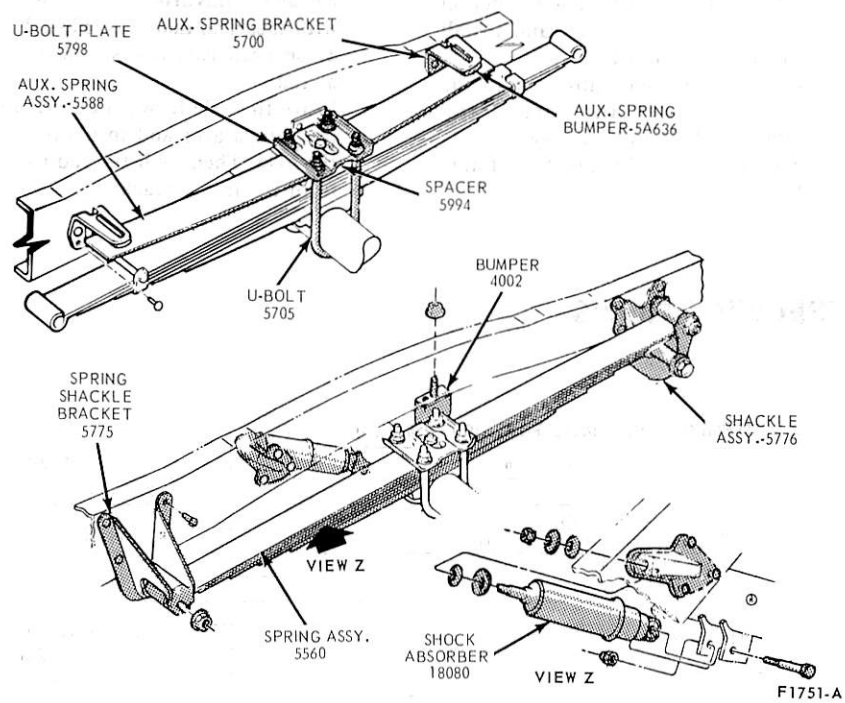

FIG. 1 Rear Spring Installation—F-100-250

F-250 4-WHEEL DRIVE, P-SERIES

Semi-elliptic, leaf-type springs are used for the rear axle suspension (Fig. 10). The front end of each spring is attached to a spring bracket on the frame side member. The rear end of each spring is attached to a bracket on the frame side member with a shackle. Each spring is attached to the axle with two U-bolts. A spacer is located between the spring and the axle to obtain a level ride position.

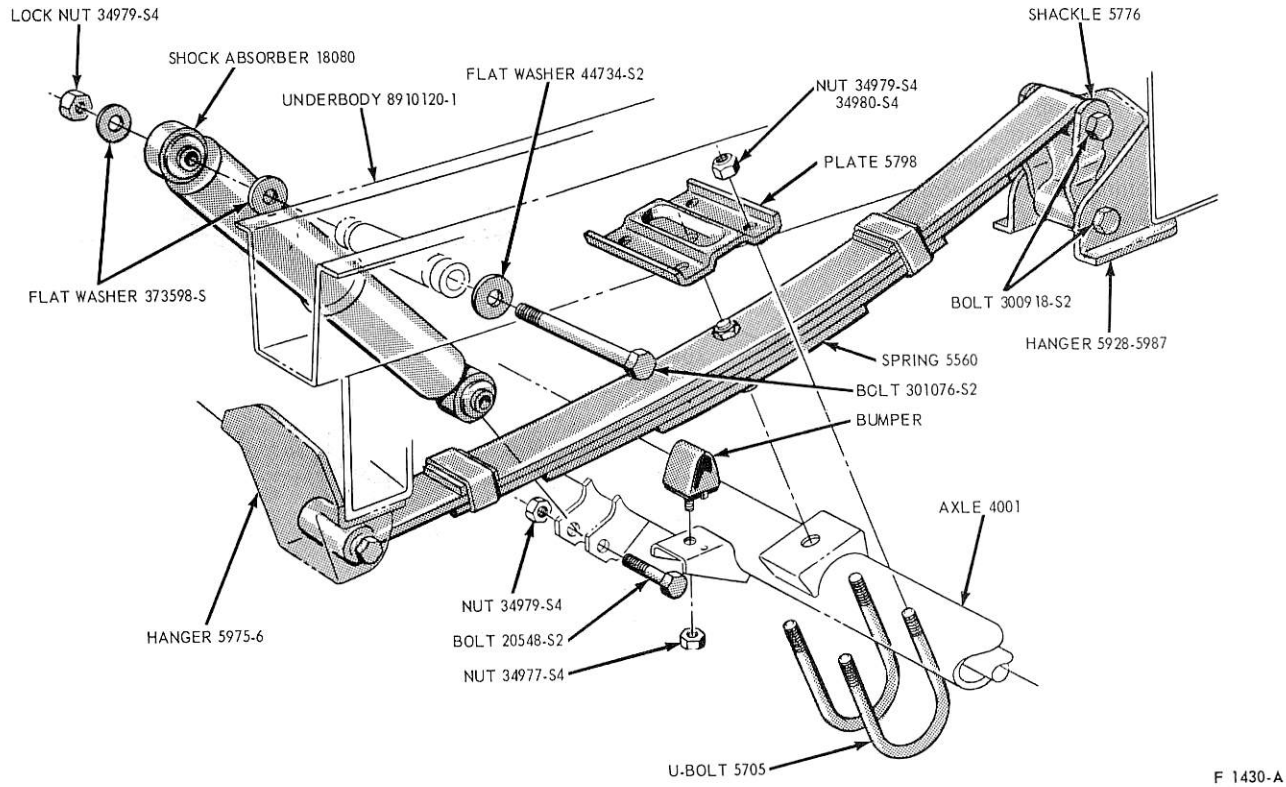

FIG. 2 Rear Spring Installation—E-100-200

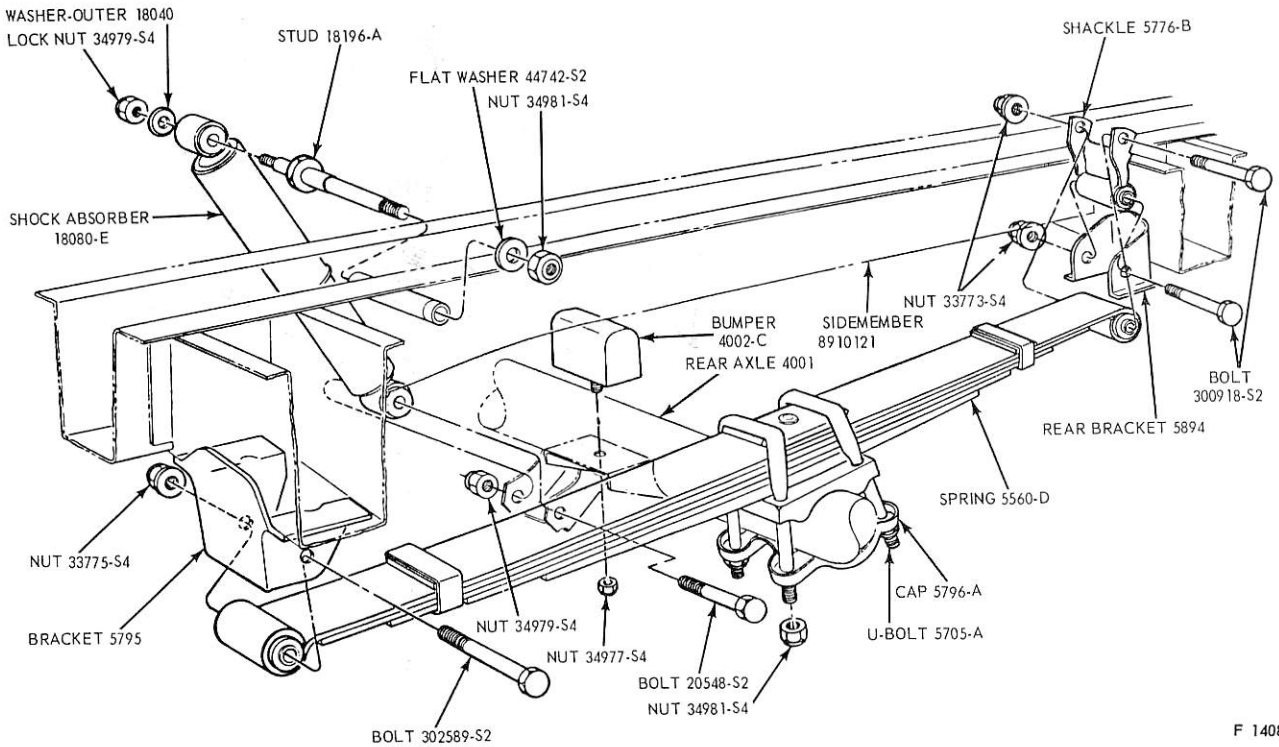

FIG. 3 Rear Spring Installation—E-300

REAR SHOCK ABSORBER

The hydraulic shock absorbers are of the direct, double-acting type. They provide a continuous damping effect both on compression and rebound. These shock absorbers are of telescopic design with rubber grommets at the mounting points for quiet operation. Since the shock absorbers are sealed, non-adjustable units, they must be replaced as complete assemblies.

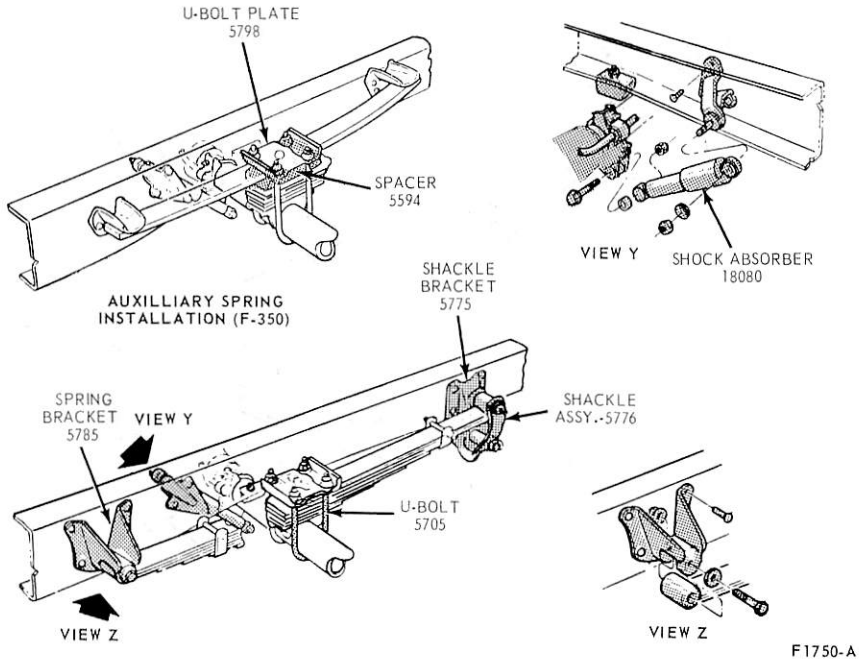

FIG. 4 Rear Spring Installation—F-350, F-250 (140 in. W.B.)

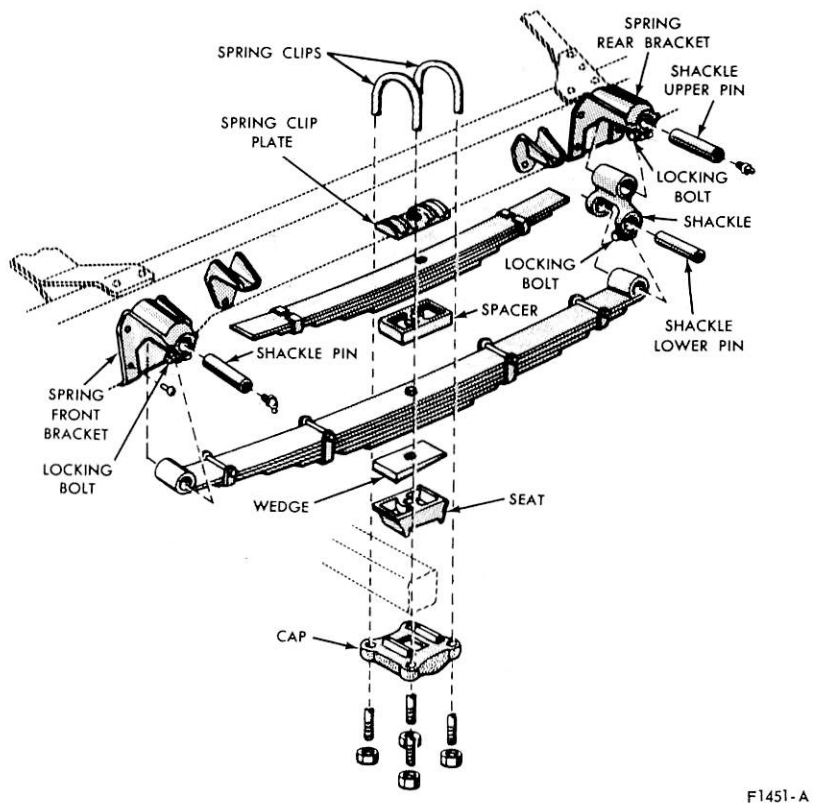

FIG. 5 Rear Spring Installation—C-Series

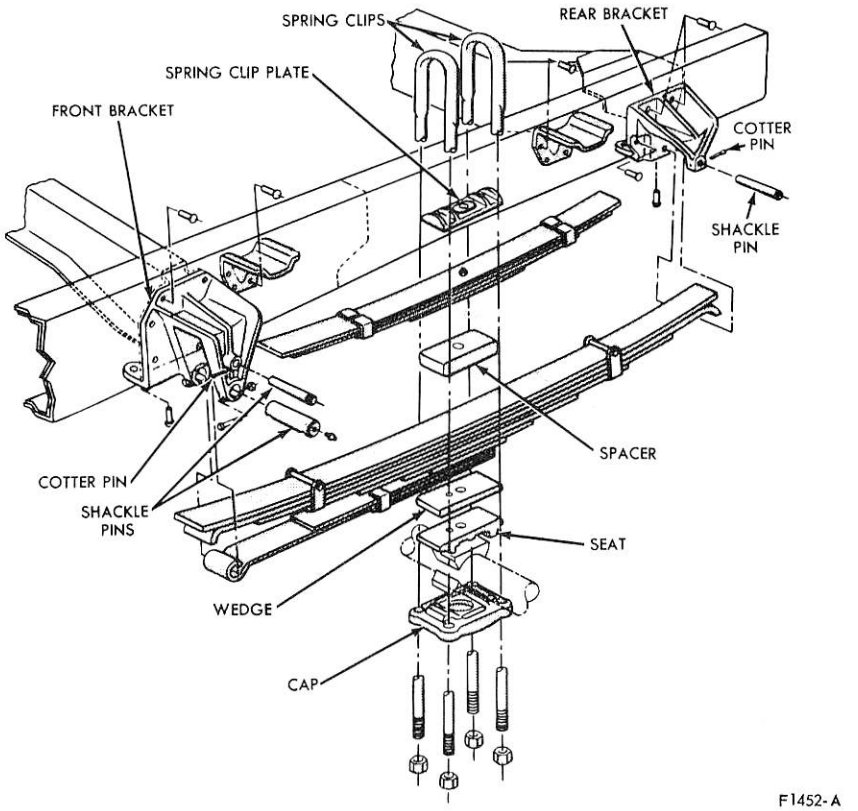

FIG. 6 Rear Spring Installation—L-B-LN-500-750, 6000, 7000

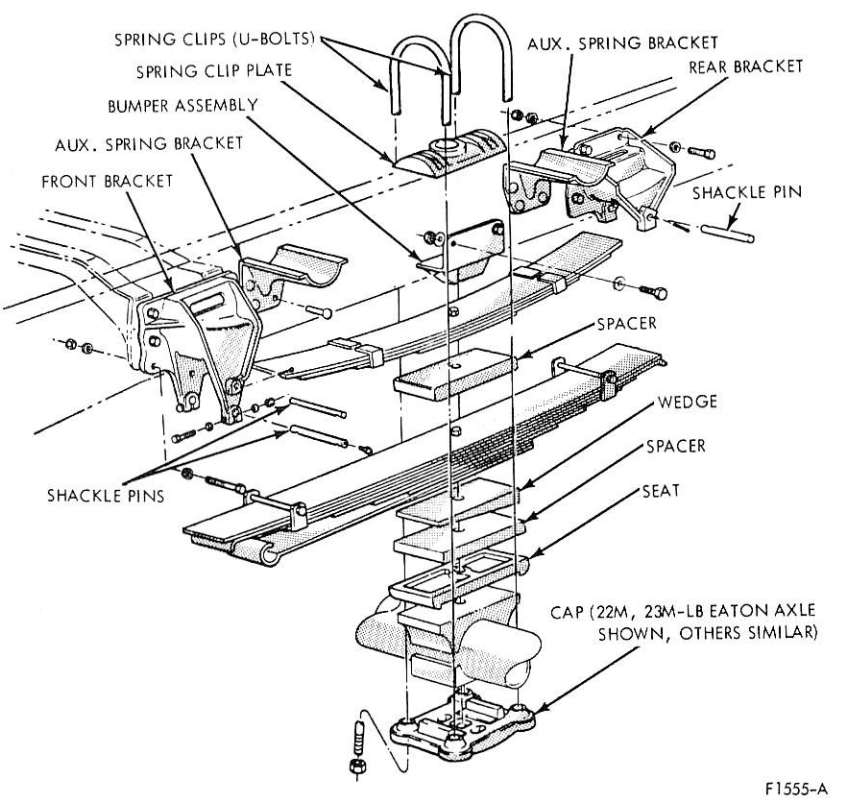

FIG. 7 Rear Spring Installation—L-LN-800-900,8000,9000

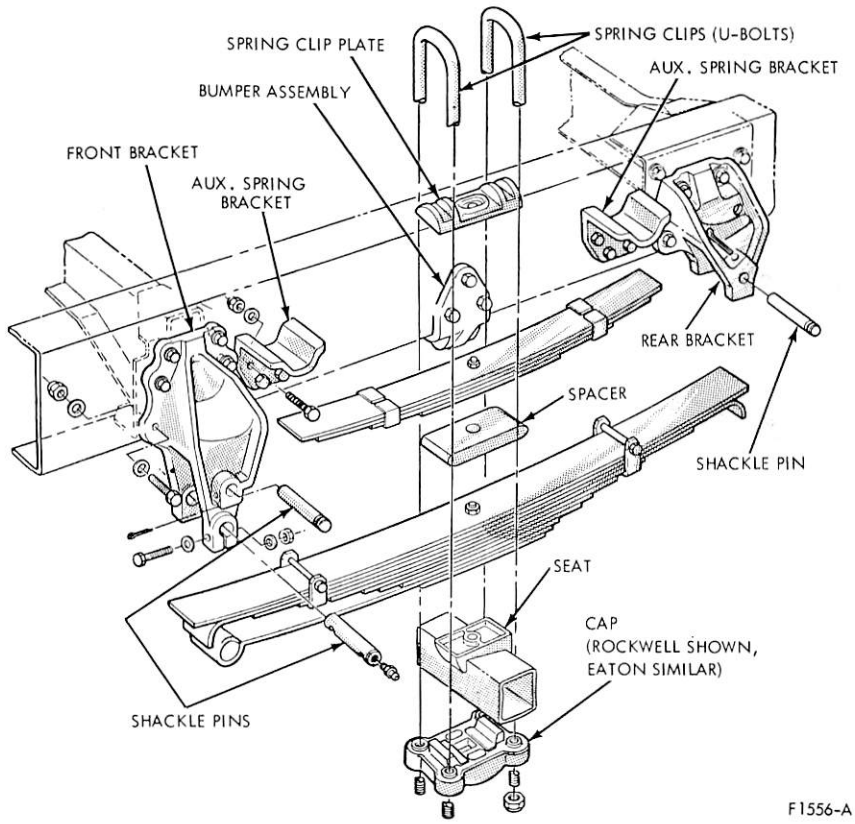

FIG. 8 Rear Spring Installation—W-900

REMOVAL AND INSTALLATION

REAR SHOCK ABSORBER

ECONOLINE, BRONCO

Removal and Installation

1. Raise the vehicle on a hoist.
2. Remove the shock absorber lower attaching nut and bolt, and swing the lower end free of the mounting bracket on the axle housing (Fig. 11).
3. Remove the attaching nut from the upper mounting stud, and remove the shock absorber.
4. Transfer the sleeves from the upper and lower bushings to the replacement shock absorbers. If worn or damaged, use new sleeves.
5. Position the replacement shock absorber with rubber bushings and steel washers to the upper mounting bolt.
6. Swing the lower end of the shock absorber into the mounting bracket on the axle housing and install the washers, mounting bolt, and self-locking nut. Torque the nut to specification.
7. Install the self-locking nut on the upper mounting bolt. Torque the nut to specification.

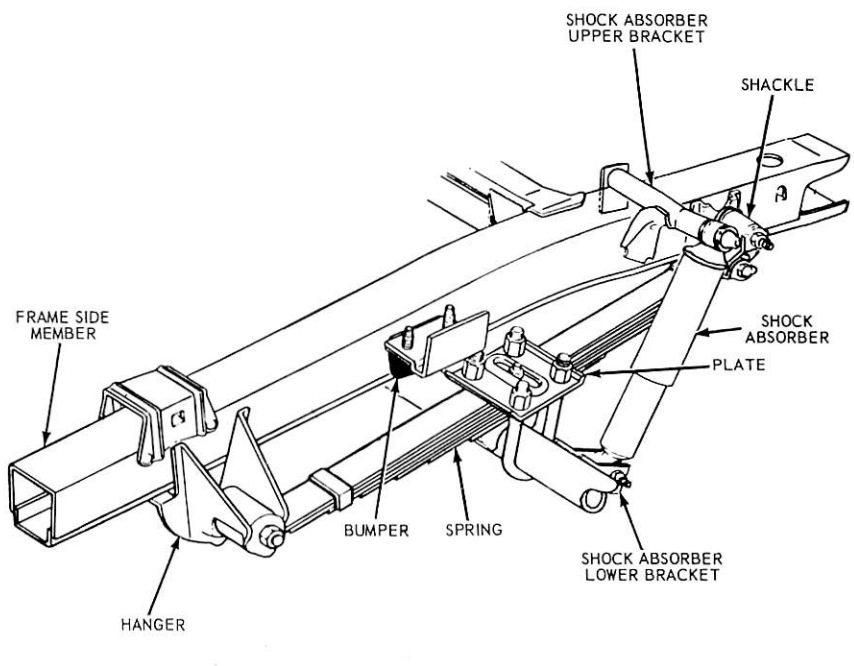

FIG. 9 Rear Suspension—Bronco

ALL VEHICLES EXCEPT ECONOLINE AND BRONCO

Removal and Installation

To replace the rear shock absorber, remove the self-locking nut, steel washer, and rubber bushings at the upper and lower ends of the shock absorber. Remove the shock absorber.

When installing a new shock absorber, use new rubber bushings. Position the shock absorber on the mounting brackets with the large diameter at the top.

Install the rubber bushing, steel washer, and self-locking nut. Tighten the nut until it rests against the shoulder of the stud.

REAR SPRING

F-100, 250

Removal and Installation

1. Raise the vehicle frame until the weight is off the rear spring, with the wheels still touching the floor.
2. Remove the nuts from the spring clips (U-Bolts) and drive the clips out of the spring clip plate. If so equipped, remove the auxiliary spring and spacer.
3. Remove the spring to bracket nut and bolt at the front of the spring.
4. Remove the shackle upper and lower nuts and bolts at the rear of the spring. Remove the spring and shackle assembly from the rear shackle bracket.
5. If the bushing in the spring or shackle are worn or damaged, remove them.
6. If required, install new bushings in the spring and the shackle.
7. Position the spring in the shackle, and install the upper shackle to spring bolt and nut with the bolt head facing outboard.
8. Position the front end of the spring in the bracket and install the bolt and nut.
9. Position the shackle in the rear bracket and install the bolt and nut.
10. Position the spring on top of the axle with the spring tie bolt centered in the hole provided in the seat. If so equipped, install the auxiliary spring and spacer.
11. Install the spring clips, spring clip plate, and nuts.
12. Lower the vehicle to the floor and torque the spring bolt nuts and spring clip nuts (U-bolts) to specifications. Torque the front spring bolt and nut and the rear shackle bolts and nuts.

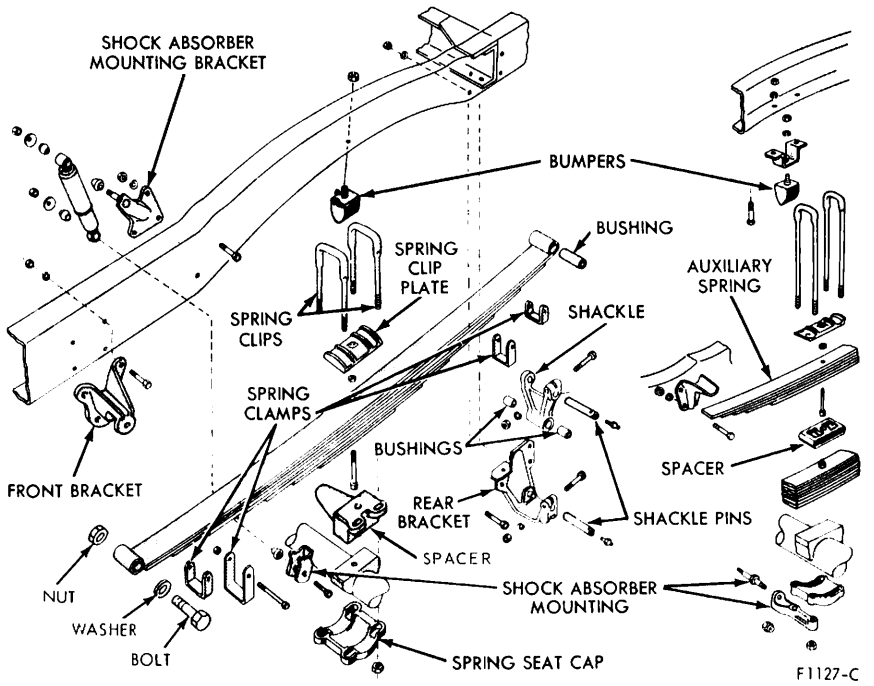

FIG. 10 Rear Suspension—F-250 4 Wheel Drive (P-Series similar)

E-100, 200

Removal and Installation

1. Raise the rear end of the vehicle and support the chassis with safety stands. Support the rear axle with a floor jack or hoist.
2. Disconnect the lower end of the shock absorber from the bracket on the axle housing (Fig. 2).
3. Remove the two U-bolts and plate.
4. Lower the axle and remove the upper and lower rear shackle bolts.
5. Pull the rear shackle assembly and rubber bushings from the bracket and spring.
6. Remove the nut and mounting bolt that secures the front end of the spring. Remove the spring assembly from the front shackle bracket.
7. Install new rubber bushings in the rear shackle bracket and in the rear eye of the replacement spring.
8. Position the spring assembly and connect the front eye of the spring to the front shackle bracket by installing the front mounting bolt and nut. Do not tighten the nut.
9. Mount the rear end of the spring by inserting the upper bolt of the rear shackle assembly through the eye of the spring and the lower bolt through the rear spring hanger.
10. Position the spring center bolt to the pilot hole in the axle and install the plate. Install the U-bolts through the plate. Do not tighten the attaching nuts at this time.
11. Raise the axle with a floor jack or hoist until the vehicle is free of the stands and connect the lower end of the shock absorber to the bracket on the axle housing (Fig. 2).
12. Torque the spring front mounting bolt and nut, the rear shackle nuts and the U-bolt nuts to specifications.
13. Remove the safety stands and lower the vehicle.

E-300

Removal and Installation

1. Raise the rear end of the vehicle and support the chassis with safety stands. Support the rear axle with a floor jack or hoist.
2. Disconnect the lower end of the shock absorber from the bracket on the axle housing (Fig. 3).
3. Remove the two spring clips (U-bolts) and the spring clip cap.
4. Lower the axle and remove the spring front bolt from the hanger.
5. Remove the two attaching bolts from the rear of the spring. Remove the spring and the shackle.
6. Assemble the upper end of the shackle to the spring with the attaching bolt as shown in Fig. 3.
7. Connect the front of the spring to the front bracket with the attaching bolt.

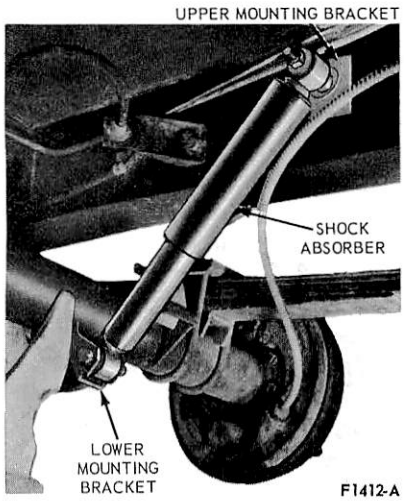

FIG. 11 Rear Shock Absorber Installed

8. Assemble the spring and shackle to the rear bracket with the attaching bolt.
9. Place the spring clip plate over the head of the center bolt.
10. Raise the axle with a jack and guiding it so that the center bolt enters the pilot hole in the pad on the axle housing.
11. Install the spring clips, cap and attaching nuts. Tighten the nuts snugly.
12. Connect the lower end of the shock absorber to the lower bracket.
13. Torque the spring front mounting bolt and nut, the rear shackle nuts and spring clip nuts to specifications.
14. Remove the safety stands and lower the vehicle.

F-100, F-250 4-WHEEL DRIVE AND P-SERIES

Removal and Installation

1. Raise the vehicle frame until the weight is off the rear springs with the wheels still touching the floor.
2. Remove the nuts from the spring clips (U-bolts) and drive the clips out of the spring seat cap and remove the spring clip plate (Figs. 1 and 10). If the truck is so equipped, remove the auxiliary spring and spacer.
3. Remove the shackle pin locking bolts from each end of the spring (bolt and nut on F-250 4 x 4 front eye).
4. Working from the inner side of the frame, insert a drift in the hole provided in the frame for removing the shackle pin. Drive the shackle pin out of each spring bracket (bolt on F-250 4 x 4 front eye).
5. Remove the spring and shackle from the vehicle. On F-100-250 4 x 4 models, remove the spring to axle spacer.
6. Drive out the remaining shackle pin from the rear spring eye and remove the shackle from the spring.
7. Position the shackle to the rear spring eye.
8. Install the shackle pin through the shackle and spring eye with the lubricator fitting on the shackle pin facing outward.
9. Line up the shackle pin lock bolt groove with the lock bolt hole in the shackle. Install the lock bolt, lock washer, and nut.
10. Position the spring on the axle, making sure that the spring tie bolt is in the hole provided in the axle spring seat or spacer. On F-100-250 4 x 4 models, first install the spacer between the spring seat and the spring, making sure the spacer dowel is positioned in the pilot hole of the axle spring seat.
11. Install a shackle pin through the shackle and rear bracket, with the lubricator fitting on the shackle pin facing outward. Line up the pin groove with the lock bolt hole in the bracket, and install the lock bolt, lock washer, and nut as before.
12. Repeat this operation to install a shackle pin at the front bracket and spring eye (bolt on F-250 4 x 4).
13. If so equipped, install the auxiliary spring and spacer. Place the spring clip plate on top of the spring at the tie bolt, and put the spring clips over the spring assembly and axle.
14. Position the spring seat cap, and install the nuts on the spring clips.
15. Lower the vehicle to the floor and torque the spring clip nuts to specifications. Lubricate the fittings on the shackle pins.

BRONCO

Removal and Installation

1. Raise the vehicle by the axles and install safety stands under the frame.
2. Disconnect the shock absorber from the axle.
3. Remove the U-bolt attaching nuts and remove the 2 U-bolts and the spring clip plate (Fig. 9).
4. Lower the axle to relieve spring tension and remove the nut from the spring front attaching bolt.
5. Remove the spring front attaching bolt from the spring and hanger with a drift.
6. Remove the nut from the shackle to hanger attaching bolt and drive the bolt from the shackle and hanger with a drift and remove the spring from the vehicle.
7. Remove the nut from the spring rear attaching bolt (Fig. 9). Drive the bolt out of the spring and shackle with a drift.
8. Position the shackle (closed section facing toward front of vehicle) to the spring rear eye and install the bolt and nut.
9. Position the spring front eye and bushing to the spring front hanger, and install the attaching bolt and nut.
10. Position the spring rear eye and bushing to the shackle, and install the attaching bolt and nut.
11. Raise the axle to the spring and install the U-bolts (when an axle cap is not used, the U-bolt shank should contact the leaf edges) and spring clip plate. Align the spring leaves.
12. Torque the U-bolt nuts and the spring front and rear attaching bolt nuts to specification. The U-bolts should contact the spring assembly edges or axle seat.
13. Connect the shock absorber to the axle and torque the nut to specification.
14. Remove the safety stands and lower the vehicle.

F-350

Removal and Installation

1. Raise the vehicle frame until the weight is off the rear springs with the wheels still touching the floor.
2. Remove the nuts from the spring U-bolts.
3. Drive the U-bolts out of the shock absorber lower bracket and the spring cap and remove the U-bolts (Fig. 4).
4. Remove the spacer from the top of the spring.
5. If equipped with auxiliary springs, remove the auxiliary spring and spacer (Fig. 4).
6. Remove the shackle to bracket bolt and nut from the rear of the spring.
7. Remove the spring to hanger bolt and nut from the front of the spring and remove the spring.
8. Remove the shackle to spring bolt and nut and remove the shackle from the spring.
9. Position the shackle to the spring and install the attaching bolt and nut. The bolt must be installed so the nut is away from the frame (Fig. 4).
10. Position the spring to the spring front hanger and install the attaching bolt and nut (Fig. 4).
11. Position the shackle to the bracket and install the attaching bolt and nut.

12. Align the spring toe bolt with the pilot hole in the axle spring seat and, if so equipped, install the auxiliary spring and spacer (Fig. 4).
13. Position the spacer on top of the spring and install the U-bolts over the spacer, spring and axle.
14. Position the spring cap and shock lower bracket to the axle and U-bolts. Install the U-bolt attaching nuts.
15. Lower the vehicle and torque the front spring bracket bolt and nut and the rear shackle bolts and nuts to specification.

C-SERIES

Removal and Installation

1. Raise the vehicle frame until the weight is off the rear springs with the wheels still touching the floor.
2. Remove the nuts from the spring clips (U-bolts) and drive the clips out of the spring seat cap (Fig. 5). If so equipped, remove the auxiliary spring and spacer.
3. Remove the shackle pin locking bolts from each spring bracket.
4. A hole is provided in the frame opposite each spring bracket for removing the shackle pin. Insert a drift from the inside of the frame through these holes and drive the shackle pin out of each bracket.
5. Remove the spring and shackle assembly from the truck. Separate the spring from the shackle by removing the locking bolt and driving out the shackle lower pin from the shackle and spring eye.
6. Remove the lubrication fittings from the shackle pins.
7. Align the upper bore of the shackle with the holes in the rear bracket. Drive the shackle upper pin through the shackle and bracket with the pin lubricator hole facing outward.
8. Line up the shackle pin groove with the locking bolt hole in the bracket and install the locking bolt, washer and nut.
9. Install the spring seat and the wedge (if so equipped) between the axle and the spring (Fig. 8). Position the spring on the axle, being sure that the spring tie bolt is in the hole provided in the axle or spring seats. **If so equipped, install the auxiliary spring and spacer.**
10. Drive the shackle lower pin through the shackle and spring rear eye. Install the locking bolt, washer and nut as before. Repeat the operation to install the shackle pin through the spring front bracket and eye.
11. Place the spring clip plate on top of the spring at the tie bolt, and put the spring clips over the spring assembly and the axle.
12. Install the spring seat cap on the spring clips and install the spring clip nuts on the clips.
13. Lower the vehicle to the floor and tighten the spring clip nuts to specified torque.

L-LN-B-W-SERIES

Removal and Installation

1. Raise the vehicle frame until the weight is off the rear springs with the wheel still touching the floor.
2. Remove the nuts from the spring clips (U-bolts) and drive the clips out of the spring seat cap (Figs. 6, 7 and 8). Remove the auxiliary spring and spacer.
3. Support the spring, and remove the front shackle pins. The upper pin is held in place by a cotter pin, and the lower pin by lock bolts (Figs. 6, 7 and 8).
4. Remove the rear shackle pin, which is held in place by a cotter pin, and remove the spring.
5. Position the spring in the rear bracket and install the shackle pin and cotter pin.
6. Position the spring in the front bracket. Install the upper shackle pin, and secure with a cotter pin.
7. Using a C-clamp or jack, force the front eye of the spring up into the bracket so that the eye is aligned with the holes in the bracket. Install the lower shackle pin through the front bracket and spring eye. Align the pin groove with locking bolt hole in the bracket, install the locking bolt and nut, and tighten to specifications.
8. Position the spring seat and wedge (if so equipped) between the axle and spring (Figs. 6, 7 and 8). If so equipped, install the auxiliary clip plate on top of the spring at the tie bolt, and put the spring clips over the spring assembly and axle.
9. Install the spring seat cap on the spring clips and install the spring clip nuts on the clips.
10. Lower the vehicle to the floor and tighten the spring clip nuts to specified torque.

SPECIFICATIONS

REAR SUSPENSION TORQUE LIMITS – F-SERIES, ECONOLINE, BRONCO, P-SERIES

Description	Model	Ft-Lb
Rear Shock Upper Mounting	F-100-250,F-100 (4x4), P-350-3500-400	15-25
	P-500	100-120
	F-250 (4x4),F-350,E-Series,Bronco	40-60
Rear Shock Lower Mounting	All F-Series,E-300,Bronco	40-60
	All P-Series	35-45
	E-100-200	45-60
Rear Spring to Axle U-Joint	F-100-250,F-100 (4x4), E-100-200	(1/2-13 Nut) 45-70 (9/16-12 Nut) 85-115
	P-350-3500-400,F-250 (4x4),F-350	150-190
	P-500	220-260
	E-300	150-200
	Bronco	45-60
Rear Spring to Front Hanger	All except P-Series	(9/16-12 Nut) 75-105 (5/8-11 Nut) 150-190
Rear Spring to Rear Hanger	F-100-350,Bronco	75-105
	F-200-250 (4x4)	150-190
	Econoline	55-90
Rear Axle Bumper to Frame	All except P-350-3500	20-30
	P-350-3500	12-17
Rear Shackle, Front Hanger Bracket, Rear Hanger Bracket Locking Pins	P-Series	15-25

REAR SUSPENSION TORQUE LIMITS – 500–9000 SERIES

Torque limits are determined by these bolt and nut diameters	
Dia. Inches	**Torque Limit**
1/4	85–115 (In-Lb)
5/16	12–17 (Ft-Lb)
3/8	31–42 (Ft-Lb)
7/16	50–70 (Ft-Lb)
1/2	75–105 (Ft-Lb)
9/16	110–150 (Ft-Lb)
5/8	150–205 (Ft-Lb)
3/4	220–300 (Ft-Lb)
7/8	360–480 (Ft-Lb)
1.0	540–730 (Ft-Lb)

CF1716-B

PART 14-40 Rear Suspension—Hendrickson Tandems

Applies To LT-LTS-LNT-CT-WT-800-9000 Models Only

COMPONENT INDEX	Page	COMPONENT INDEX	Page
DESCRIPTION	40-01	SPRING BUSHING	
EQUALIZING BEAMS		Removal and Installation	40-06
Locking Ball Sockets	40-07	SUPPORT BEAM BUSHING AND/OR BAR	
REAR SPRING		Removal and Installation	40-07
Removal and Installation	40-01	SUPPORT BEAM END BUSHING	
REAR SPRING FRONT SHACKLE PIN		Removal and Installation	40-07
Removal and Installation	40-06	SUPPORT BEAM	
SADDLE AND/OR BUSHINGS		Removal and Installation	40-06
Removal and Installation	40-07	TORQUE ARM	
SPECIFICATIONS	40-10	Removal and Installation	40-09

DESCRIPTION

REAR SUSPENSION—TANDEM

The RUE extended leaf suspension consists of conventional stacked leaf springs with the top two leaves extended to the rear (Fig. 1). A two-stage spring action on the tandem suspension is created when the top two spring leaves come into contact with a second, inner hanger. When the vehicle is empty, the sprung weight is carried by the rearmost hanger and most of the spring deflection is through the top two leaves. As the load increases, the inner hanger comes in contact with the spring. At contact the effective spring length is reduced, increasing the spring rate.

The SR shear-ride suspension consists of four two-stage rubber shear springs which carry and cushion the load (Fig. 2). When the vehicle is lightly loaded, the first stage provides a soft deflection rate conducive to good riding. As the load is increased, a flange on the vertical drive pin cushions out the first stage. In this manner spring deflection rate is increased.

The RS rubber load cushion suspension system utilizes four cored rubber cushions which replace the steel leaf springs of the conventional suspension and is particularly effective with varying loads (Fig. 3). Aluminum saddles, walking beams and rubber cushions offer a weight advantage over spring suspensions. Equalizing beam design distributes the load equally between the axles.

The RT and RU steel leaf suspensions have conventional stacked leaf springs (Fig. 4). Equalizing beams and the below-axle load design absorbs strain, twist and road shock. Some models have 10 leaf springs, others 12 leaves.

REMOVAL AND INSTALLATION

REAR SPRING

RU, RUE, AND RT SUSPENSIONS

Removal and Installation

1. Raise the rear of the vehicle and position the blocks under the frame behind the rear axle.
2. Remove the wheels and the hub and drum from the forward rear axle.
3. Remove the support beam bar saddle caps from the lower side of the support beam.
4. Position a jack under the front end of the support beam.
5. Remove the shackle pin lock pin from the spring front bracket and remove the shackle pin (Figs. 1 and 4).
6. Lower the support beam and spring and remove the spring from the support beam.
7. RU and RUE Suspension Only—Remove the U-bolt nuts and remove the saddle and U-bolts from the spring.
8. RT Suspension Only—Remove the spring plate to support beam saddle attaching bolts and nuts. Remove the saddle and spring plate from the spring.
9. RU and RUE Suspension Only—Position and saddle to the

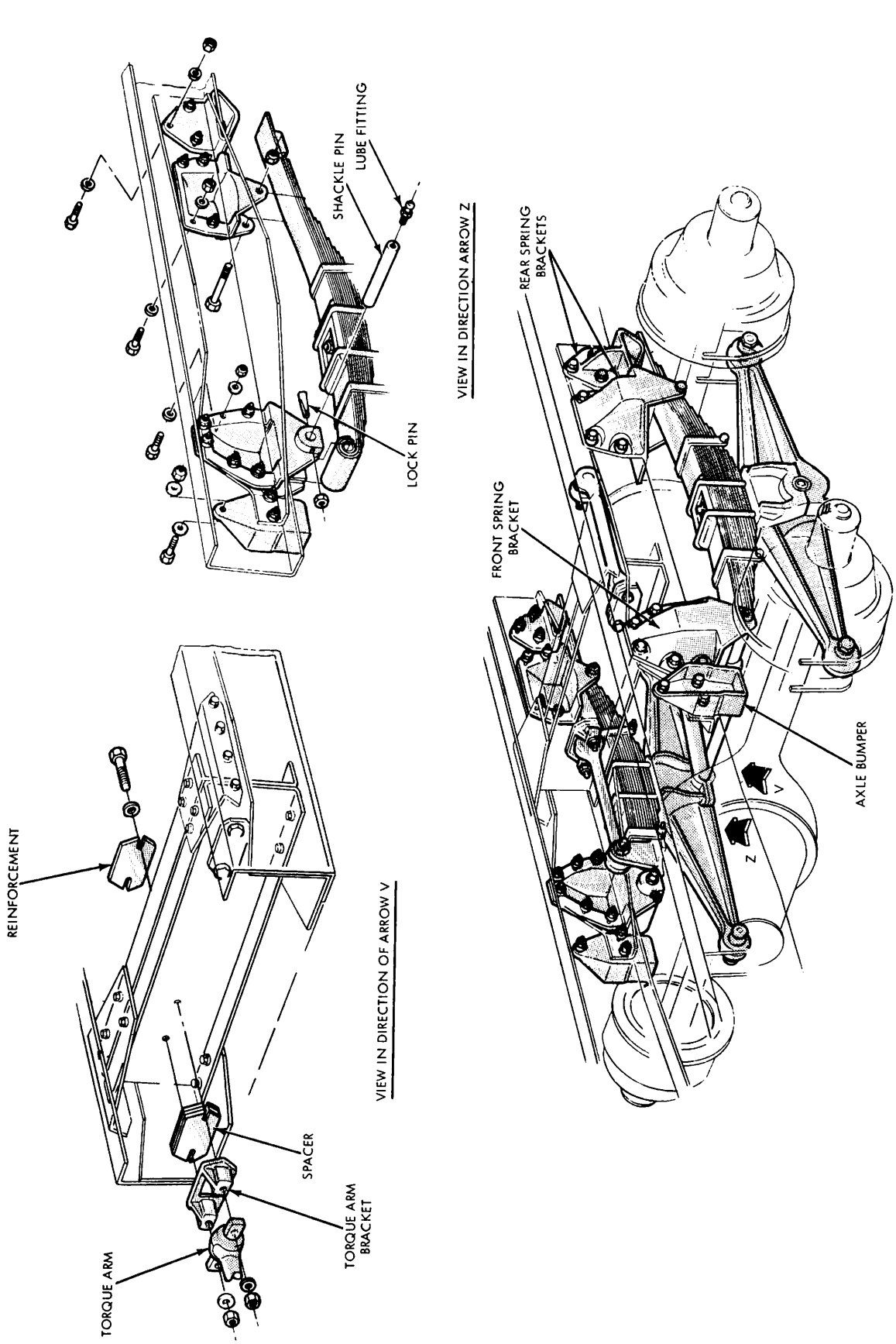

FIG. 1 RUE Tandem Suspension

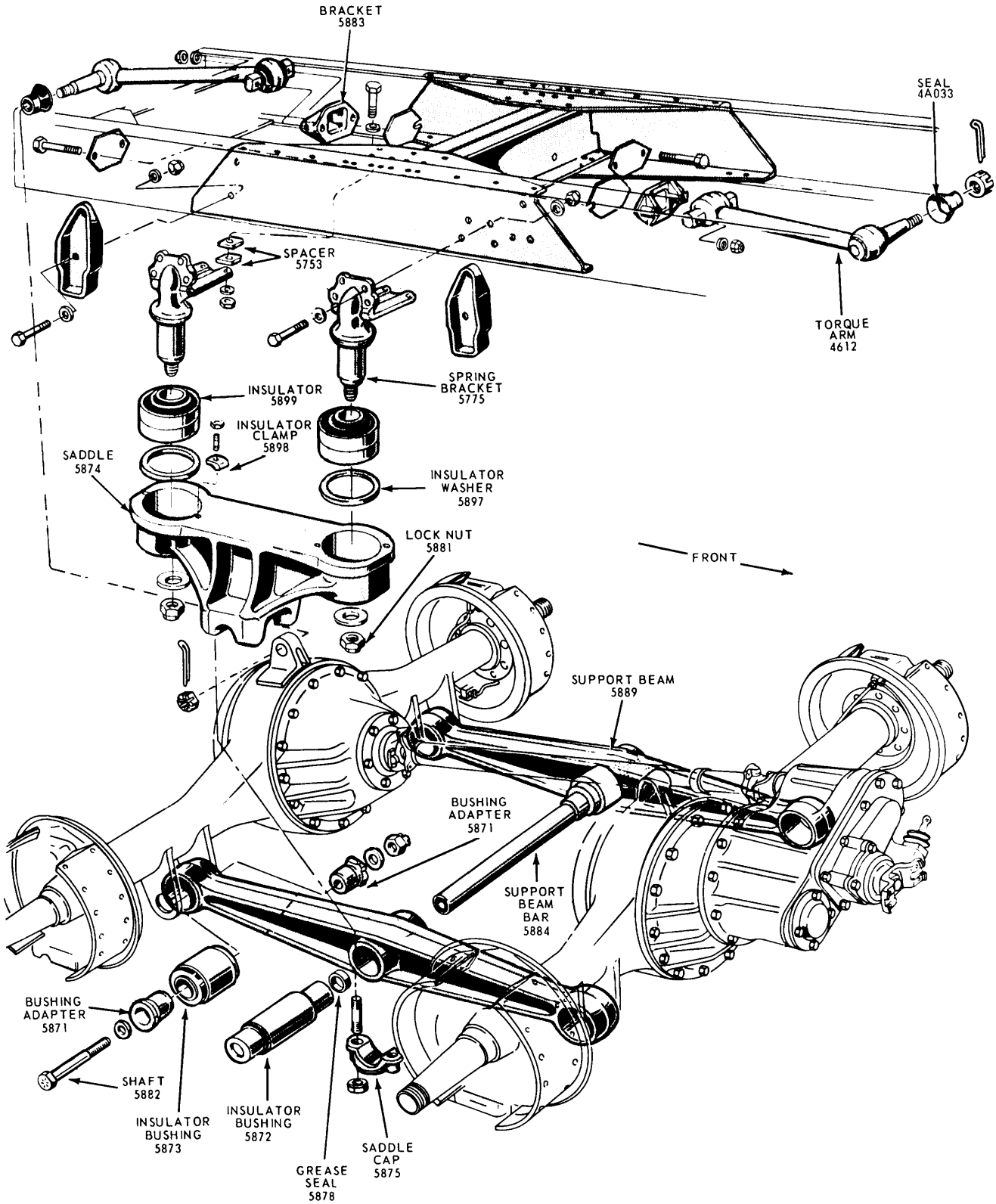

F 1303-A

FIG. 2 SR Tandem Suspension

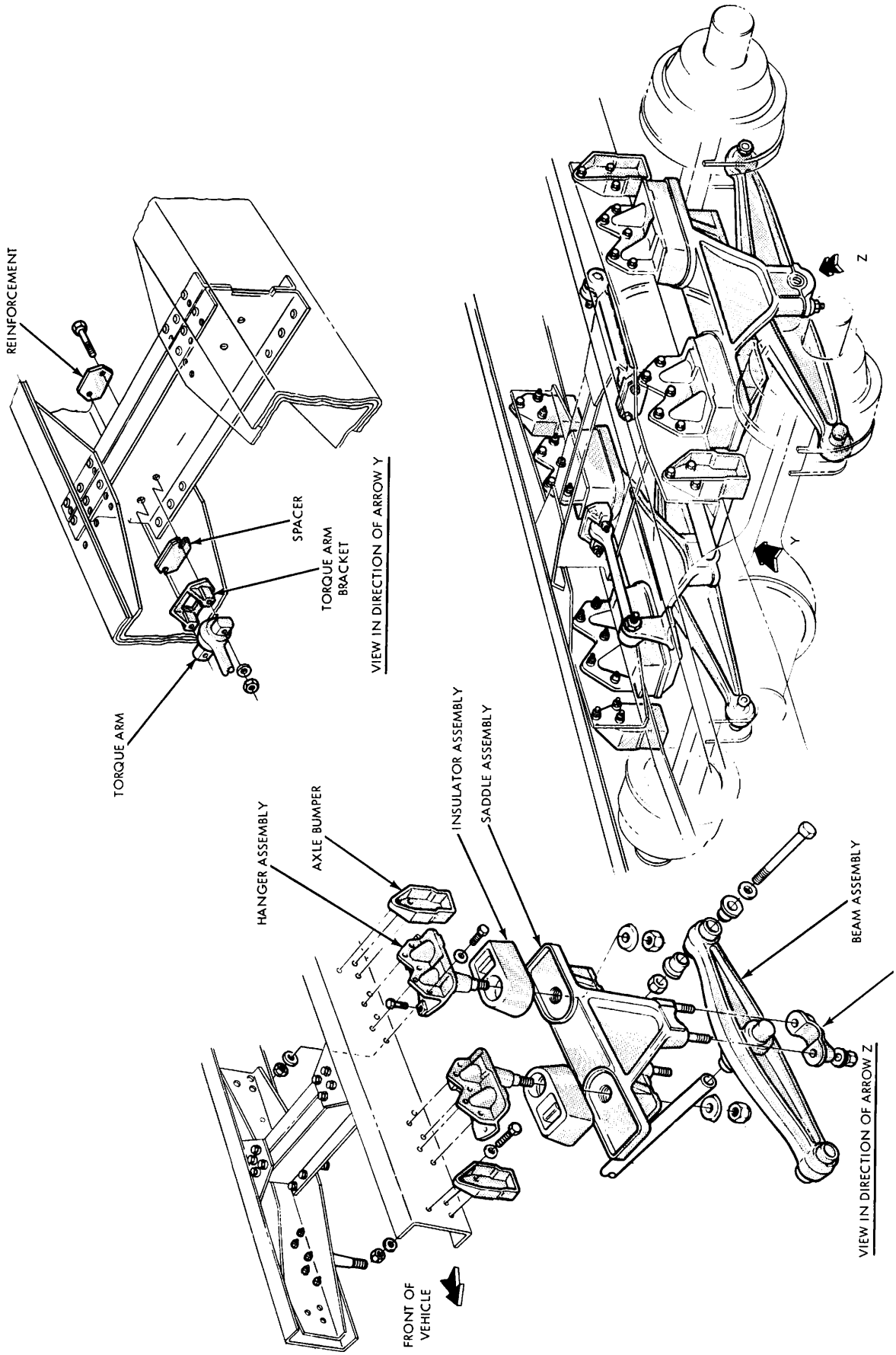

FIG. 3 RS Tandem Suspension

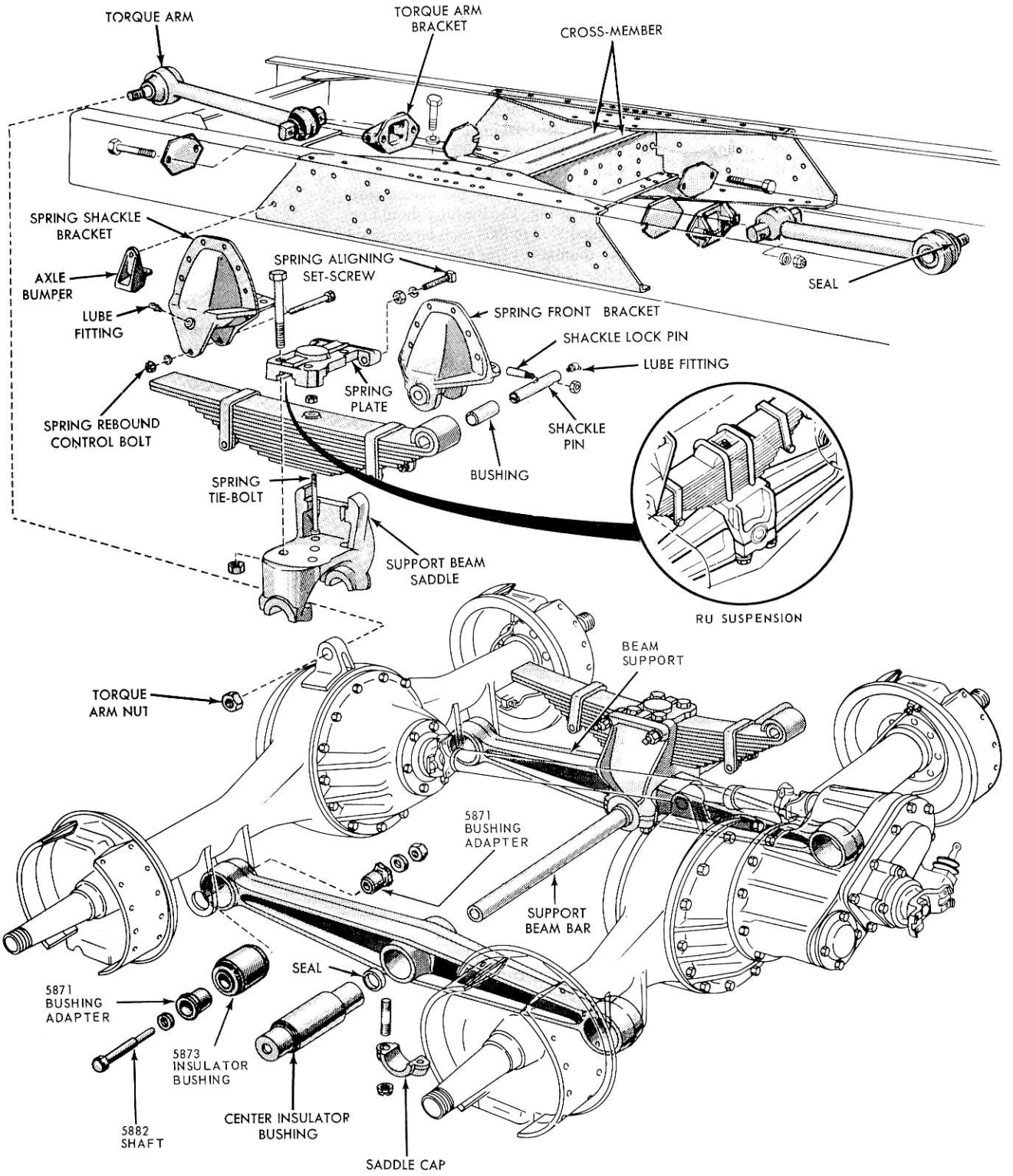

FIG. 4 RT Tandem Suspension Typical of RU Suspension

spring and install the U-bolts and nuts. Torque the nuts to specification.
10. RT Suspension Only—Position the spring plate and saddle to the spring and install the attaching bolts and nuts. Torque the nuts and bolts to specification.
11. Position the spring and saddle to the support beam and spring rear bracket.
12. Raise the support beam and spring and position the spring to the spring front bracket.
13. Align the spring with the front bracket and install the shackle pin.
14. Install the shackle pin lock pin and torque the lock pin nut to specification.
15. Install the hub and drum and wheels on the forward rear axle.
16. Remove the jack from the support beam and the blocks from the rear of the frame. Lower the saddle on the support beam bar center insulator bushing and install the saddle caps.
17. Install the saddle caps and torque the nuts to specification. **The weight of the vehicle must be on the suspension when the saddle cap attaching nuts are tightened.**

REAR SPRING FRONT SHACKLE PIN

RU, RUE AND RT SUSPENSIONS

Removal and Installation

1. Raise the vehicle frame and place safety stands under the frame.
2. Remove the shackle lock pin from the spring front bracket (Figs. 1 and 4).
3. Remove the lubrication fitting from the shackle pin and remove the shackle pin from the spring and spring bracket.
4. Position the shackle pin to the spring bracket. Align the spring with the shackle pin and install the pin.
5. Install the shackle lock pin and attaching nut and torque the nut to specification.
6. Install the shackle pin lubrication fitting and lubricate the pin.
7. Remove the safety stands and lower the vehicle.

SPRING BUSHING

RU, RUE AND RT SUSPENSIONS

Removal and Installation

1. Position the vehicle so that the rear of the frame may be raised with a chain hoist until the load is removed from the spring.
2. Remove the shackle lock pin which secures the spring shackle pin in the spring front bracket (Figs. 1 and 4). Remove the lubrication fitting from the bracket pin. Remove the pin from the bracket and spring bushing.
3. Raise the rear of the vehicle until the bushing clears the bracket. Install a bushing puller to remove the bushing from the spring, then remove the bushing from the puller.
4. Install the new bushing in the spring with the split in the bushing installed directly opposite to the loaded side of the spring. The bushing should be reamed .002 to .009 inch larger than the diameter of a new spring pin. After reaming, clean the bushing.
5. Lower the vehicle frame until the spring bushing is aligned in the bracket pin and lock it in place with the lock pin. Install the lubrication fitting in the bracket pin and lubricate the pin with chassis lubricant.

SUPPORT BEAM

Removal and Installation

1. Raise the rear of the vehicle and position safety stands under the rear end of the frame.
2. Remove the axle shafts from both rear axles.
3. Back off the brake adjustment at both wheels.
4. Remove the wheel and drum assemblies from both axles with a wheel dolly.
5. Disconnect the brake air lines from the brake actuators.
6. Remove the backing plate attaching bolts and nuts and remove the backing plates from both axles.
7. Position a jack under each axle housing.
8. Remove the saddle cap attaching nuts and remove the saddle caps.
9. On RU suspensions only: Cut the center of the support beam bar near the bushings and remove the center section of the bar. **Caution must be used if any burning is done during this operation as some of these beams are aluminum and some are nodular iron. These metals can easily become brittle with heat at quite low temperatures. The forged steel beam is not as sensitive.**
10. Position a jack under the center of the support beam and separate the beam ends from the axles.

Two types of beam end attachments are used (Fig. 5). Removal of the two types is as follows:

Tube type—The tube can be removed by removing the nuts and placing a spacer bushing between one

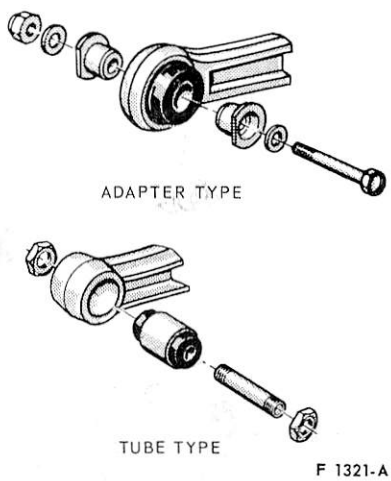

FIG. 5 Beam End Attaching Methods

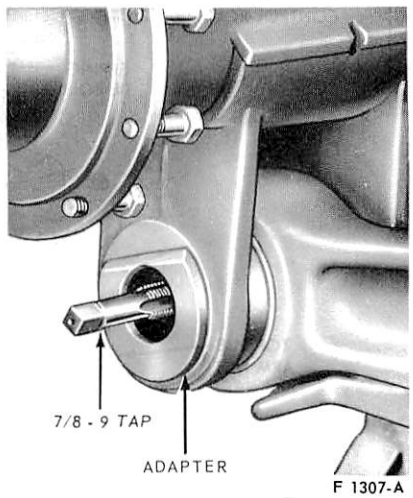

FIG. 6 Threading the Beam

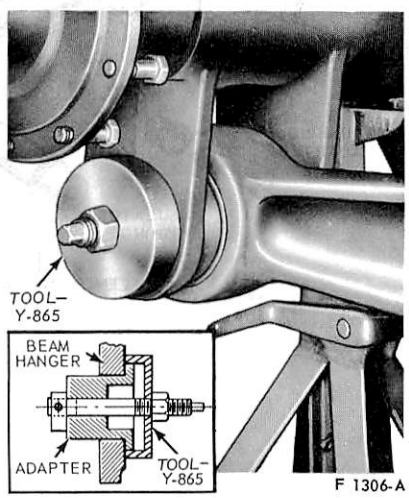

FIG. 7 Removing Beam Adapter

nut and the beam hanger. Then, tighten the nut to pull the tube loose. Another method is to saw through the tube along the inside surface of the beam hanger with a hack saw.

Adapter type—Remove the adapter bolt and nut. Then, thread the beam adapter with a 7/8-9 tap (Fig. 6).

Install puller tool OTCY865 in the adapter and remove the adapter from the axle and support beam (Fig. 7).

Remove the other adapter from the axle and support beam with a hammer and drift.

11. On RU suspensions, remove the beam from the vehicle. On SR and RT suspensions, pull the beam away from the vehicle and support beam bar.
12. After cleaning, coat the beam end openings and the outside of the bushings with ball joint grease. Then, install the bushings in the beam (Figs. 8 and 9).
13. On SR and RT suspensions, if installing a new beam, it may be necessary to weld the end cap on the center bushing.
14. Raise brackets. Attach the beam to the axles as follows:

Tube type—Apply a thin coat of ball joint grease to the tube. Insert the tube through the beam hanger and beam end bushing. Apply SAE-20 oil to the tube threads and install the nuts (one on each end of the tube). When both ends of the beam are attached to the axles, torque the tube nuts to specification (at the end of this Part).

Adapter type—Apply a thin coat of ball joint grease to the outside surface of the adapters and the ID of the bushings. Install the adapters through the beam hanger and into the beam end bushing. **The flats on the adapters must be in a vertical position (Fig. 5). Install the bolt, washers, and nut. Apply SAE-20 oil to the bolt threads. A washer must be under both the bolt head and the nut.** When both ends of the beam are attached to the axles, torque the nut to specification (at the end of this Part).

15. Position the brake backing plates to the axles and install the attaching bolts. Torque the bolts to specification.
16. Connect the air brake lines to the brake actuators.
17. Install the wheel and drum assemblies on the axles and install the axle shafts.
18. Adjust the brakes and lower the vehicle, aligning the support beam saddle with the center insulator bushing.
19. Install the saddle caps and torque the attaching nuts to specification. **The weight of the vehicle must be on the wheels when the saddle caps are tightened.**

EQUALIZING BEAM—RT 441 AND RT 444 SUSPENSIONS

After new ball sockets are pressed into the equalizing beams, the sockets must be counterbored prior to installing the washers and bolts. Use a 1 1/8 inch cutter and counterbore to a depth of 3/32 inch; then, insert four 1 inch washers top and bottom on both ends of the beam as shown in Figure 10. Install the bolts and lock nuts and torque to 45-50 ft-lb.

SADDLE AND/OR BUSHINGS

SR SUSPENSION (RS TANDEM SUSPENSION SIMILAR)

Removal and Installation

1. Raise the rear of the vehicle and position safety stands under the rear end of the frame.
2. Remove the axle shafts from both rear axles.
3. Back off the brake adjustment at both wheels.
4. Remove the wheel and drum assemblies from both axles with a wheel dolly.
5. Position jacks under the beam to support the beam and remove the saddle caps.
6. Lower the beam and remove the spring bracket to saddle attaching nuts (Fig. 2).
7. Lower the saddle on the beam and remove the saddle and insulators from the vehicle.
8. Remove the saddle insulator bushing retainer clamps.
9. Place the saddle in an arbor press and remove the bushings with Tool T57L-4614-A.
10. Clean the saddle bushing bores with solvent and remove any burrs.
11. Lubricate the bushings and saddle bore with ball joint grease C1AZ-19590-B and install them in the saddle with the washer first in the bore.
12. Install the bushing retainer clamps and torque the nuts to specification.
13. Position the saddle to the spring brackets (Fig. 2) and install the washers and attaching nuts. Torque the nuts to specification.
14. Raise the beam to seat the saddle over the beam and install the wheel and drum assemblies.
15. Adjust the brakes and install both axle shafts.
16. Lower the vehicle (be sure the saddle is seated on the support beam bushing) and install the saddle caps. Torque the nuts to specification with the weight of the vehicle on the wheels.

SUPPORT BEAM BUSHING AND/OR BAR

Removal and Installation

1. Remove the two saddle caps from each support beam.
2. Raise the vehicle frame and place safety stands under the frame.
3. Place a jack between the support beam and the spring or saddle and force the support beam down from the saddle until the bushings clean the saddle.
4. RU Series—Cut the support beam bar near each support beam bar bushing and remove the center section of the support beam bar. **Caution must be used if any burning is done during this operation as some of these beams are aluminum and some are modular iron. These metals can easily become brittle with heat at quite low temperatures. The forged steel beam is not as sensitive.**
5. All except RU Series—Cut the outside end off each support beam bushing. Observe the caution in step 4. Then, remove the support beams and bushings.
6. Position the puller tool shown in Fig. 9 and remove the bushing from each beam.
7. Lubricate the outside of each bushing and the bushing bore in each beam with white lead.
8. Install the bushings in the beams with the tools shown in Fig. 9. Then, remove the tools.
9. Install a new support beam bar in the bushings. Lubricate the bar end and bushing ID with ball joint grease C1AZ-19590-B. All except RU Series. Install the bushing end caps and weld the caps in the bushings.
10. Raise the axles so that the saddles rest on the support beam bushings and remove the safety stands from under the vehicle.
11. Lower the axles and check the alignment of the saddles on the bushings. Install the saddle caps and torque the attaching nuts to specification. **The axles must be in the operation position when the saddle caps are tightened.**

SUPPORT BEAM END BUSHING

Removal and Installation

1. Raise the rear of the vehicle and

place support blocks under the frame behind the rear axle.
2. Remove the axle shafts and back-off the brake adjustment.
3. Remove the wheel and drum from the truck with a wheel dolly.
4. Disconnect the brake air line from the actuator.
5. Remove the backing plate attaching nuts and bolts and remove the backing plate.
6. Position jacks under both axle housings and separate the beam end from the axle hanger.

Two types of beam end attachments are used (Fig. 5). Removal of the two types is as follows:

Tube type—The tube can be removed by removing the nuts and placing a spacer bushing between one nut and the beam hanger. Then, tighten the nut to pull the tube loose. Another method is to saw through the tube along the inside surface of the beam hanger with a hack saw.

Adapter type—Remove the adapter bolt and nut. Then, thread the beam adapter with a 7/8-9 tap (Fig. 6).

Install puller Tool OTCY865 in the adapter and remove the adapter from the axle and support beam (Fig. 7).

Remove the other adapter from the axle and support beam with a hammer and drift.

7. Place a jack between the support beam and the end of the spring and fork the beam down to clear the hanger bracket on the axle (Fig. 11).
8. Trim the rubber from the bushing on the inboard side of the support beam.
9. Position the tool OTC KIT Y850A to the beam and bushing and remove the bushing from the support beam (Fig. 8).
10. Lubricate the beam opening and the bushing with white lead.
11. Position the bushing to the beam and install the bushing in the beam with the tools shown in Fig. 8.
12. Remove the bushing tools from the beam and remove the jack between the beam and spring or saddle.
13. Position the beam to the axles. Attach the beam to the axle as follows:

Tube type—Apply a thin coat of ball joint grease C1AZ-19590-B to he tube. Insert the tube through the beam hanger and beam end bushing. Apply SAE-20 oil to the tube threads and install the nuts (one on each end of the tube). When both ends of the beam are attached to the axles, torque the tube nuts to specification (at the end of this Part).

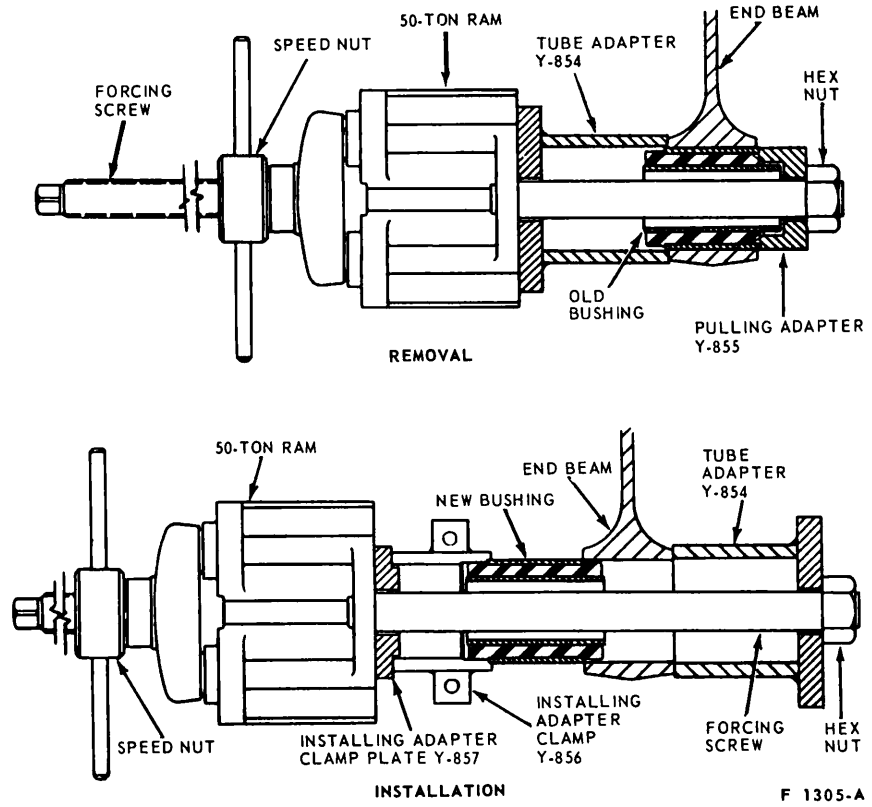

FIG. 8 Beam End Bushing Tools

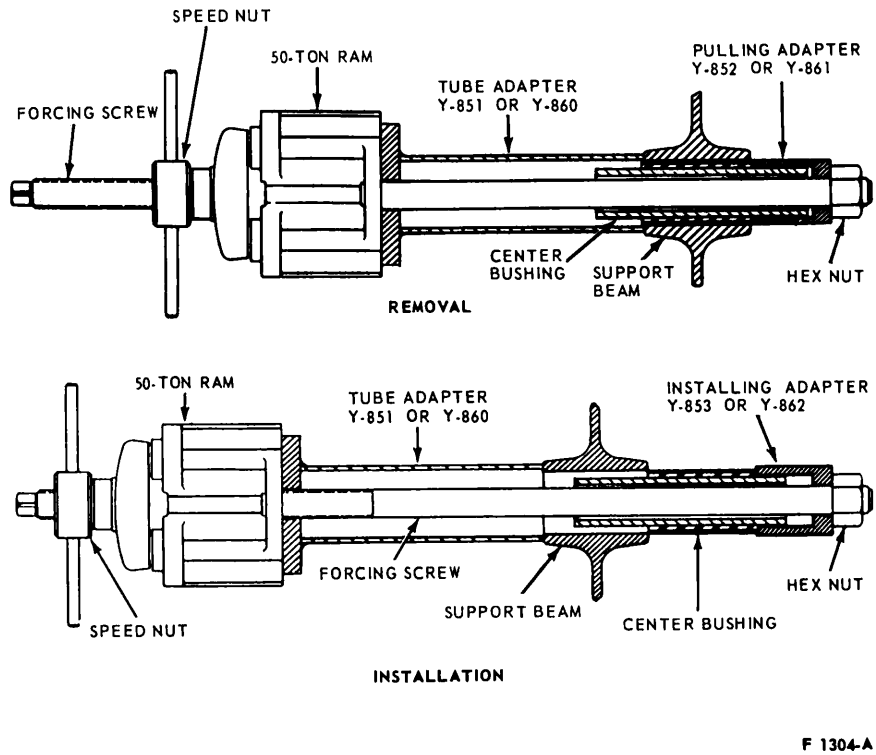

FIG. 9 Beam Center Bushing Tools

Adapter type—Apply a thin coat of ball joint grease C1AZ-19590-B to the outside surface of the adapters and the inside diameter of the bushing. Install the adapters through the beam hanger and into the beam end bushing. **The flats on the adapters must be in a vertical position (Fig. 5). Install the bolt, washers, and nut. A washer must be under both the bolt head and the nut.** When both ends of the beam are attached to the axles, torque the nut to specification (at the end of this Part).

14. Position the brake backing plate to the axle and install the attaching bolts and nuts. Torque the nuts to specification.
15. Connect the brake air line to the actuator.
16. Install the wheel and hub and drum on the axle and install the axle shaft.
17. Adjust the brakes and lower the vehicle.

TORQUE ARM

Removal and Installation

1. Remove the cotter pin from the torque arm stud at the axle bracket if so equipped.
2. Remove the castellated or lock nut attaching the torque arm stud to the axle bracket.
3. Position a jack under the differential carrier to prevent the axle from tipping.
4. Push the torque arm stud from the axle bracket with Tool OTC1002-L.
5. Remove two nuts attaching the torque arm bracket to the frame crossmember and remove the torque arm and bracket from the vehicle.
6. Position the torque arm and the torque arm bracket to the frame crossmember and install the attaching nuts. Torque the nuts to specification.
7. Position the torque arm to the axle bracket and install the attaching nut. Torque the nut to specification and install the cotter pin if a castellated nut is used.
8. Remove the jack from under the differential carrier.

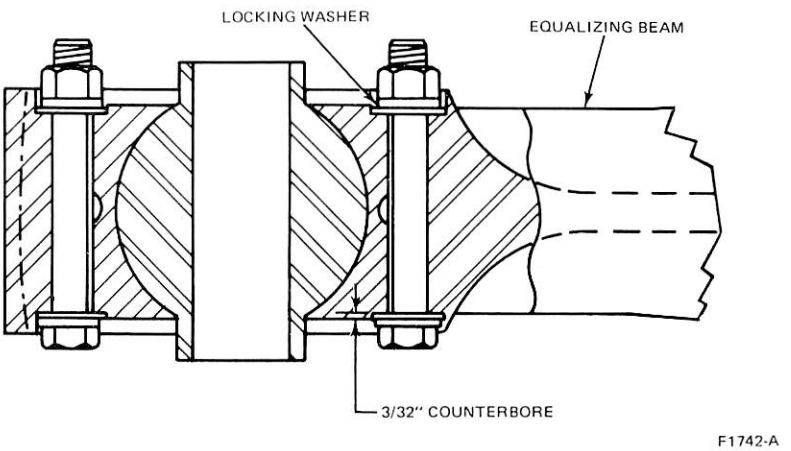

FIG. 10 Locking Beam Sockets—RT 441 and RT 444 Suspensions

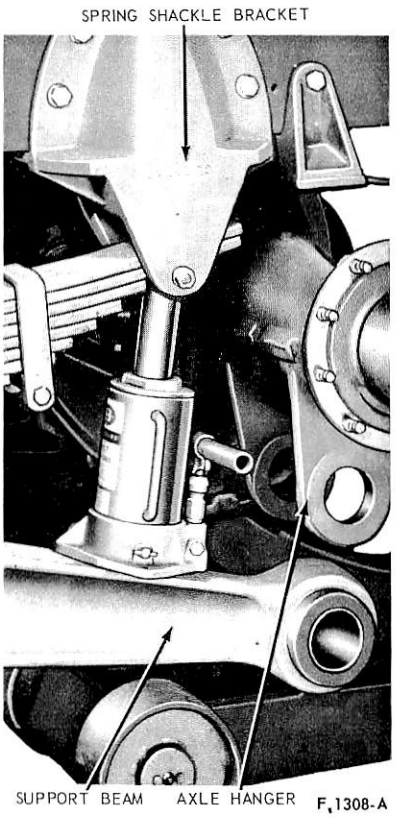

FIG. 11 Forcing Support Beam Down

SPECIFICATIONS

TANDEM SUSPENSION TORQUE LIMITS (FT-LBS)

Hendrickson							
Description	**RU-RUE-RT**	**RS**	**SR**	**Description**	**RU-RUE-RT**	**RS**	**SR**
Beam & Adaptor to Axle	220-300	220-300	220-300	Torque Arm to Axle	220-300	220-300	220-300
Spring Brackets to Frame	220-300	–	220-300	Cap to Saddle	220-300	220-300	220-300
Shackle Pin Lock Nut	75-105	–	–	Hanger Assembly to Frame	–	150-205	–
Axle Bumper Lock Nut	220-300	220-300	220-300	Hanger Assembly to Saddle Assembly	–	220-300	–
Torque Arm to Bracket to Crossmember	150-205	150-205	150-205	Spring Bracket to Saddle Assembly	–	–	150-205

CF1718-A

PART 14-41 Rear Suspension — Reyco 101 Tandem

Applies To WT-9000 Models Only

COMPONENT INDEX	Page	COMPONENT INDEX	Page
ADJUSTMENTS		ADJUSTMENTS - Cont.	
Eccentric Bolt	41-03	Rear Axle to Frame	41-02
Front Drive Axle to Rear Drive Axle	41-03	DESCRIPTION	41-01

DESCRIPTION

REAR SUSPENSION—TANDEM

This suspension has four conventional stacked leaf springs. The eccentric bushings of the torque leaves assure more positive axle spacing. Rubber pads in the rear spring hangers absorb spring shocks when the vehicle is driven unloaded. See Fig. 1.

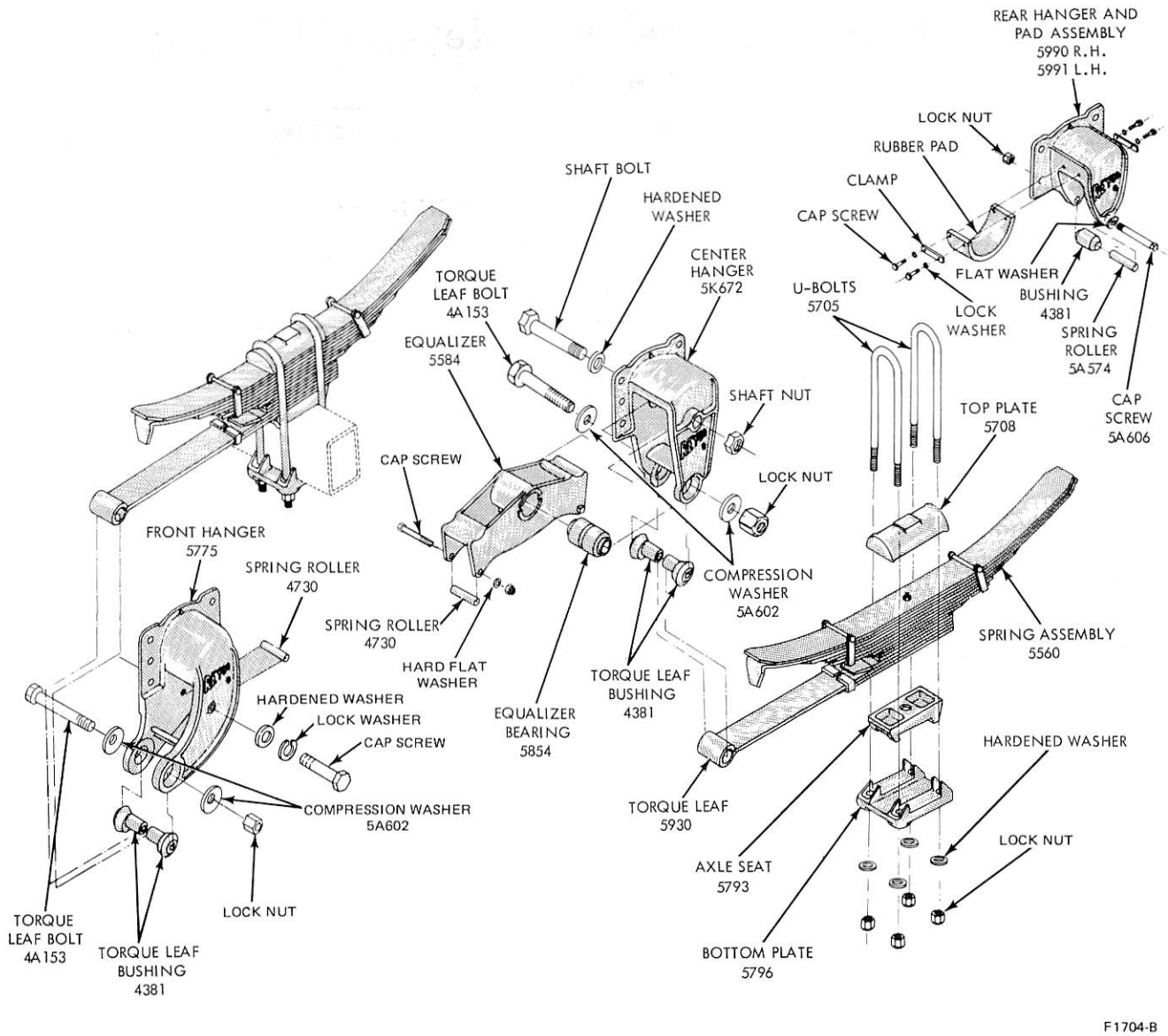

FIG. 1 Reyco 101 Tandem Suspension—Disassembled

ADJUSTMENTS

REAR AXLE TO FRAME

1. Determine a point on the frame rail that will permit clearance for measuring device to contact the frame and run perpendicular. This must be done on both sides of the vehicle (the distance is optional but must be the same on both sides). See Fig. 2.
2. To set one of the rear axles perpendicular to the frame rail, attach a string (or cord) to some object behind the rear axle (the brake chamber air line, for example).
3. Position two 1 x 2 x 2 inch blocks on the rear wheel rim bead, one on the forward side of the rim and one on the rear side.
4. Draw the string around behind the tire across the tread at approximately axle center point.
5. Pull the string tight and aligned so it just contacts both the rearward and forward blocks.
6. Keeping the string in this position (just contacting the blocks), move to the position on the frame rail determined in Step 1.
7. Record distance A.
8. Repeat the procedure on the other side of the vehicle.
9. Move the truck to permit the wheels to rotate 180 degrees and again record the readings on both sides. This will determine the existence of a bent wheel.
10. If the readings differ, the bent wheel should be replaced. If the readings are the same, proceed with the axle alignment.
11. The two distances A (left and right sides) should be the same. If they are not the same, the rear drive axle housing should be adjusted by loosening the eccentric bolt nuts and rotating the bolt to reposition the axle housing (Fig. 3). This should be done to acquire equal distances at A (Fig. 2).

FRONT DRIVE AXLE TO REAR DRIVE AXLE

1. After the rear axle is adjusted perpendicular to the frame, the forward drive axle should be set parallel to the rear drive axle.
2. A deep center-to-center trammel bar should be used to check the distances on both sides of the vehicle.
3. If the distance is not the same on both sides (and within the 50 inch plus or minus 1/8 inch specification), the eccentric bolt on the forward drive axle suspension should be adjusted to acquire an equal distance between axle centers on both sides.

ECCENTRIC BOLT

1. The vehicle should always be on a level floor area when performing either of the alignment procedures.
2. The vehicle (under power) should be rocked back and forth several times to free up and center all suspension joints.
3. Loosen the nut on the torque bolt approximately three full turns and tap the end of the torque bolt. Also tap the end of the spring behind the front hanger casting.
4. To adjust, place a wrench on the torque bolt. Place the vehicle in drive with the brakes engaged and gently disengage the clutch. The torque bolt will move with ease to the desired point.
5. Remember that the bolt is turned in the opposite direction to the desired movement of the axle.
6. The maximum adjustment is 7/16 inch on each side of the axle. Care should be taken to determine just how far the bolt should be turned to obtain the desired movement.
7. After adjusting, torque the radius leaf locknut to 150-205 ft-lb.

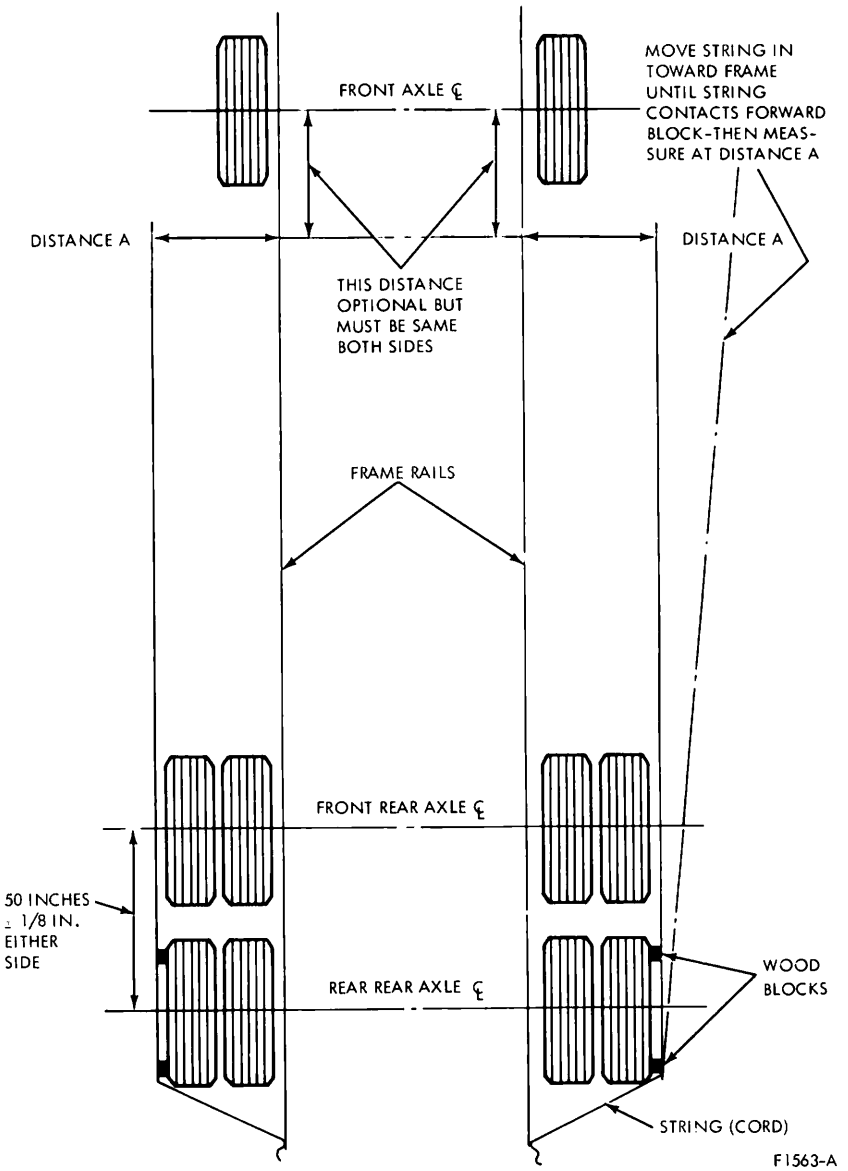

FIG. 2 Reyco Tandem Suspension Alignment Procedures

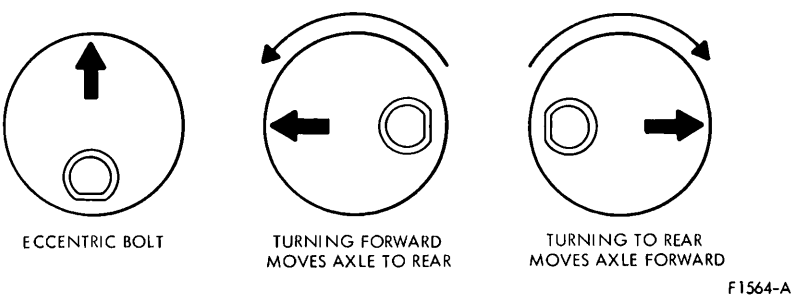

FIG. 3 Eccentric Bolt Arrow Positions

Driving Axles and Drive Shafts

GROUP 15

Page

PART 15-01
General Driving Axle and Drive Shaft Service 15-01-01
PART 15-05
Integral Carrier Axle–Dana 15-05-05
PART 15-10
Removable Carrier Axle–Ford 15-10-01
PART 15-15
Single Speed Single Reduction Axle–Eaton 15-15-01
PART 15-16
Single Speed Single Reduction Axle–Rockwell 15-16-01
PART 15-20
2–Speed Double Reduction Axle–Eaton 15-20-01
PART 15-30
Front Driving Axle–44-1F Dana 15-30-01
PART 15-31
Front Driving Axle–44-7F Dana 15-31-01
PART 15-32
Front Driving Axle–44-6BF Dana 15-32-01

Page

PART 15-33
Front Driving Axle–Rockwell 15-33-01
PART 15-40
Traction–Lok Limited Slip Differential–Ford 15-40-01
PART 15-41
No Spin Locking Differential–DAP 15-41-01
PART 15-42
Limited Slip Differential–Dana 15-42-01
PART 15-50
Tandem Axle–Eaton 15-50-01
PART 15-51
Tandem Axle–Rockwell 15-51-01
PART 15-60
Drive Shaft–Single Snap Ring Type U-Joint 15-60-01
PART 15-62
Drive Shaft–Single Bearing Cap and Bolt Type U-Joint 15-62-01
PART 15-66
Drive Shaft- Double Cardan Type U-Joint 15-66-01

PART 15-01 General Driving Axle and Drive Shaft Service

Applies To All Series

COMPONENT INDEX	Page	COMPONENT INDEX	Page
BEARING CUPS		PINION RETAINER	
Cleaning and Inspection	01-12	Cleaning and Inspection	01-13
CARRIER		PINION AND RING GEAR TOOTH CONTACT - ALL EXCEPT DANA	
Cleaning and Inspection-After Disassembly	01-12	Adjustments	01-07
Cleaning and Inspection-Before Disassembly	01-12	Shim Selection	01-07
CONE AND ROLLER ASSEMBLIES		REAR AXLE	
Cleaning and Inspection	01-12	Identification	01-02
DIFFERENTIAL BEARING ADJUSTERS		Lubrication	01-11
Cleaning and Inspection	01-12	REAR AXLE COMPANION FLANGE-FORD AXLES	
GEAR TOOTH CONTACT PATTERN CHECK		Runout Check	01-05
All Except Ford	01-01	REAR WHEEL BEARING	
Ford Axles	01-02	Removal and Installation	01-11
Shim Changes	01-05	RING GEAR	
LOCKOUT CONTROL-VACUUM OPERATED-TANDEM POWER DIVIDER		Cleaning and Inspection	01-12
Leakage Test	01-06	Removal and Installation	01-10
PINION BEARING EATON AND ROCKWELL AXLES		SPECIFICATIONS	01-14
Pre-Load Adjustment	01-08	STRAIGHT-AIR SHIFT SYSTEM-EATON 2-SPEED TANDEM	
		Test	01-06
		UNIVERSAL JOINT FLANGE	
		Cleaning and Inspection	01-13

ADJUSTMENTS

Certain rear axle and drive line trouble symptoms are also common to the engine, transmission, wheel bearing, tires, and other parts of the vehicle. For this reason, be sure that the cause of the trouble is in the rear axle before adjusting, repairing or replacing any of the parts. Reference to the Truck Diagnosis Manual can be very helpful.

On F-100 through F-350 vehicles, certain trouble symptoms may be caused by limited-slip differentials. To determine whether these vehicles are equipped with conventional or limited-slip differentials, check the vehicle rating plate and the axle ratio tag.

Location of the axle Identification Code on the Rating Plate is shown in Fig. 1. Refer to specifications for a complete listing.

TOOTH CONTACT PATTERN CHECK (ALL EXCEPT FORD)

Paint the gear teeth and roll a pattern as described in Adjustments. After diagnosing the tooth pattern as described here, make the appropriate adjustments.

The correct tooth contact pattern is considered to be the final check on pinion depth and backlash adjustments. Backlash adjustments, however, must be within the limits given in Fig. 10.

Fig. 2 shows typical Dana patterns, and Fig. 3 shows typical Eaton and Rockwell patterns.

Due to minor differences existing between individual gear sets, these patterns should be considered as typical only and should be used as a guide rather than a rigid standard. The drive pattern is rolled on the convex side of

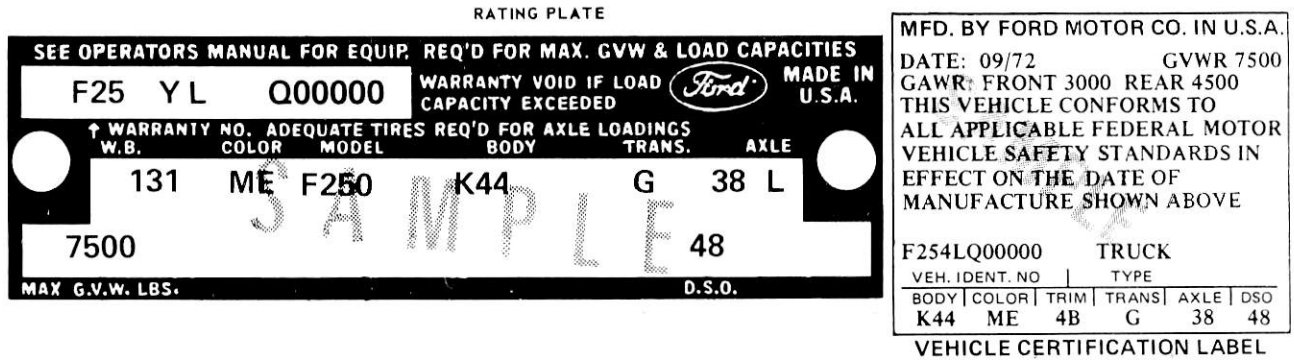

FIG. 1 Truck Rating Plate—Rear Axle Code Location

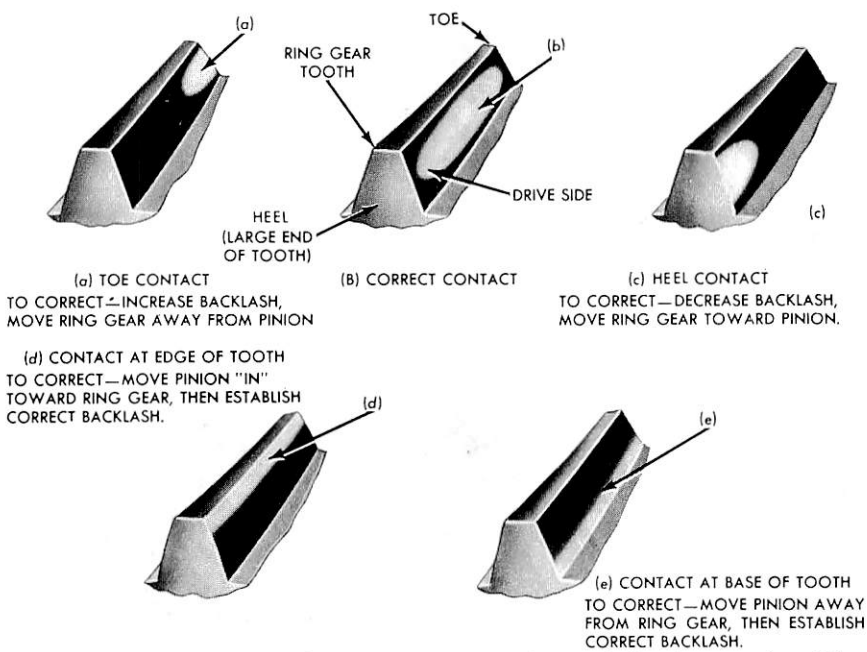

NOTE: *Contact patterns (a), (c), (d) and (e) indicate* ***Incorrect*** *placement of shims and will result in noise and gear failure. Pattern (b) shows* ***Correct*** *contact pattern. The above ring gear tooth contact patterns would be made under* ***Load*** *conditions only (actual operation). Do not attempt to check a new installation for correct contact under* ***No Load*** *conditions.* TOOTH CONTACT WILL BE CORRECT AS SHOWN AT (B) IF SHIMS HAVE BEEN PROPERLY INSTALLED.

E 1730-A

FIG. 2 Typical Gear Tooth Contact Patterns—Dana

the tooth, and the coast pattern is rolled on the concave side.

In general, desirable tooth patterns should have the following characteristics:

1. The drive pattern should be fairly well centered on the tooth.
2. The coast pattern should be centered on the tooth but may be slightly toward the toe.
3. Some clearance between the pattern and the top of the tooth is desirable.
4. There should be no hard lines where the pressure is high.

The pattern movements with changes in backlash and pinion depth are typical of all axle gears, hypoid or spiral bevel.

The movement of tooth contact patterns can be summarized as follows:

a. Decreasing backlash moved the ring gear closer to the pinion:

Drive pattern (convex side of gear) moves slightly lower and toward the toe.

Coast pattern (concave side of gear) moves lower and toward the toe.

b. Increasing backlash moves the ring gear away from the pinion.

Drive pattern moves slightly higher and toward the heel.

Coast pattern moves higher and toward the heel.

c. Thinner shim with the backlash constant moves the pinion closer to the ring gear:

Drive pattern moves deeper on the tooth (flank contact) and slightly toward the toe.

Coast pattern moves deeper on the tooth and toward the heel.

d. Thicker shim with the backlash constant moves the pinion further from the ring gear:

Drive pattern moves toward the top of the tooth (face contact) and toward the heel.

Coast pattern moves toward the top of the tooth and slightly toward the toe.

If the patterns are not correct, make the changes as indicated. The pinion need not be disassembled to change a shim.

GEAR TOOTH CONTACT PATTERN CHECK (FORD AXLES)

When rolling a tooth pattern, use the special compound (tube) packed with each service ring gear and pinion set.

Paint all gear teeth and roll a pattern as described in Adjustments. After diagnosing the tooth pattern as explained here, make the appropriate adjustments. If making a final gear tooth contact pattern check, it is

necessary to recognize the fact that there are three different types of gear set, hunting, non-hunting and partial non-hunting. Each type is determined by the number of teeth in the gears. The non-hunting and partial non-hunting types can be identified by the paint timing marks on the pinion and ring gear teeth.

ACCEPTABLE TOOTH PATTERNS (FORD AXLES)

Figure 4 shows acceptable tooth patterns all for axles. Any combination of drive and coast patterns will be acceptable.

In general, acceptable tooth patterns should have the following characteristics:

1. The drive pattern should be fairly well centered on the tooth.
2. The coast pattern should be fairly well centered on the tooth.
3. Some clearance between the pattern and the top of the tooth is desirable.
4. There should be no hard lines where the pressure is high.

The individual gear set need not conform exactly to the ideal pattern in order to be acceptable. **Any combination of drive and coast patterns shown in Fig. 4 are acceptable.**

Hunting Gear Set

In a hunting-type gear set, any one pinion gear tooth comes into contact with all ring gear teeth. In this type, several revolutions of the ring gear are required to make all possible gear combinations.

Non-Hunting Gear Set

In a non-hunting type gear set, any one pinion gear tooth comes into contact with only a few ring gear teeth. In this type, only one revolution of the ring gear is required to make all possible tooth contact combinations. **Any combination of drive and coast patterns shown in Fig. 4 are acceptable.**

Partial Non-Hunting Gear Set

In a partial non-hunting type gear set, any one pinion tooth comes into contact with only part of the ring gear teeth, but more than one revolution of the ring gear is required to make all possible gear tooth combination. Any

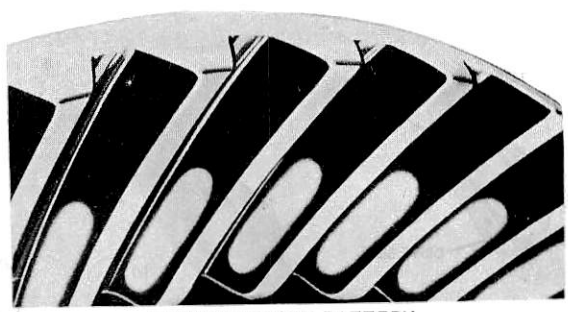

CORRECT TOOTH PATTERN
THIS PATTERN PROVIDES PROPER GEAR MESH AND AXLE PERFORMANCE.
ALL ADJUSTMENTS MUST BE MADE TO SECURE THIS TYPE OF PATTERN.

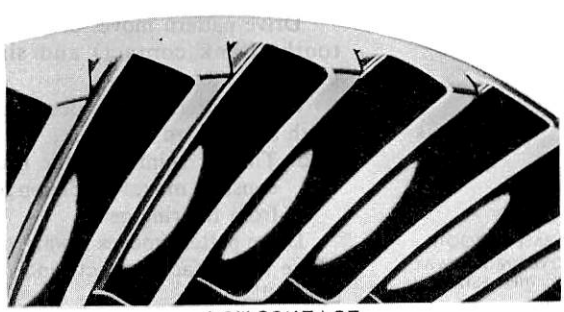

LOW CONTACT
THE PINION IS IN TOO FAR.
ADD SHIMS, AND READJUST BACKLASH.

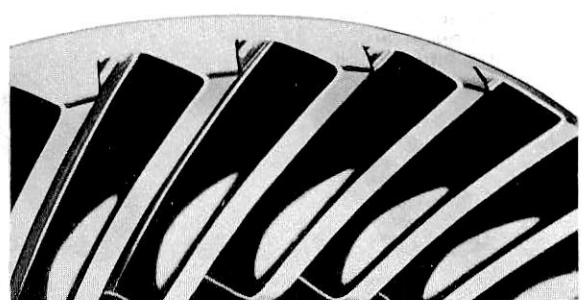

HIGH CONTACT
THE PINION IS OUT TOO FAR.
REMOVE SHIMS, AND READJUST BACKLASH.

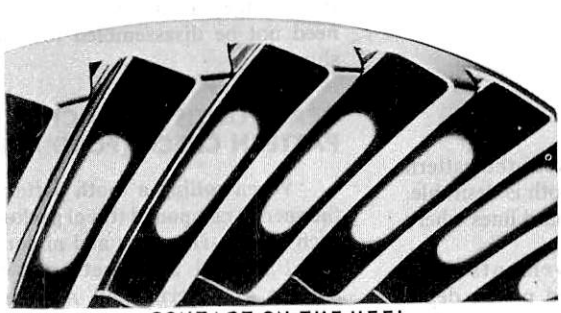

CONTACT ON THE HEEL
TOO MUCH BACKLASH.
MOVE RING GEAR TOWARD PINION.

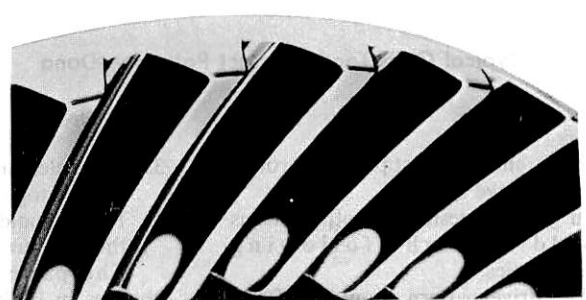

CONTACT ON THE TOE
NOT ENOUGH BACKLASH.
MOVE RING GEAR AWAY FROM PINION.

E 1772-A

FIG. 3 Eaton and Rockwell Gear Tooth Contact Patterns

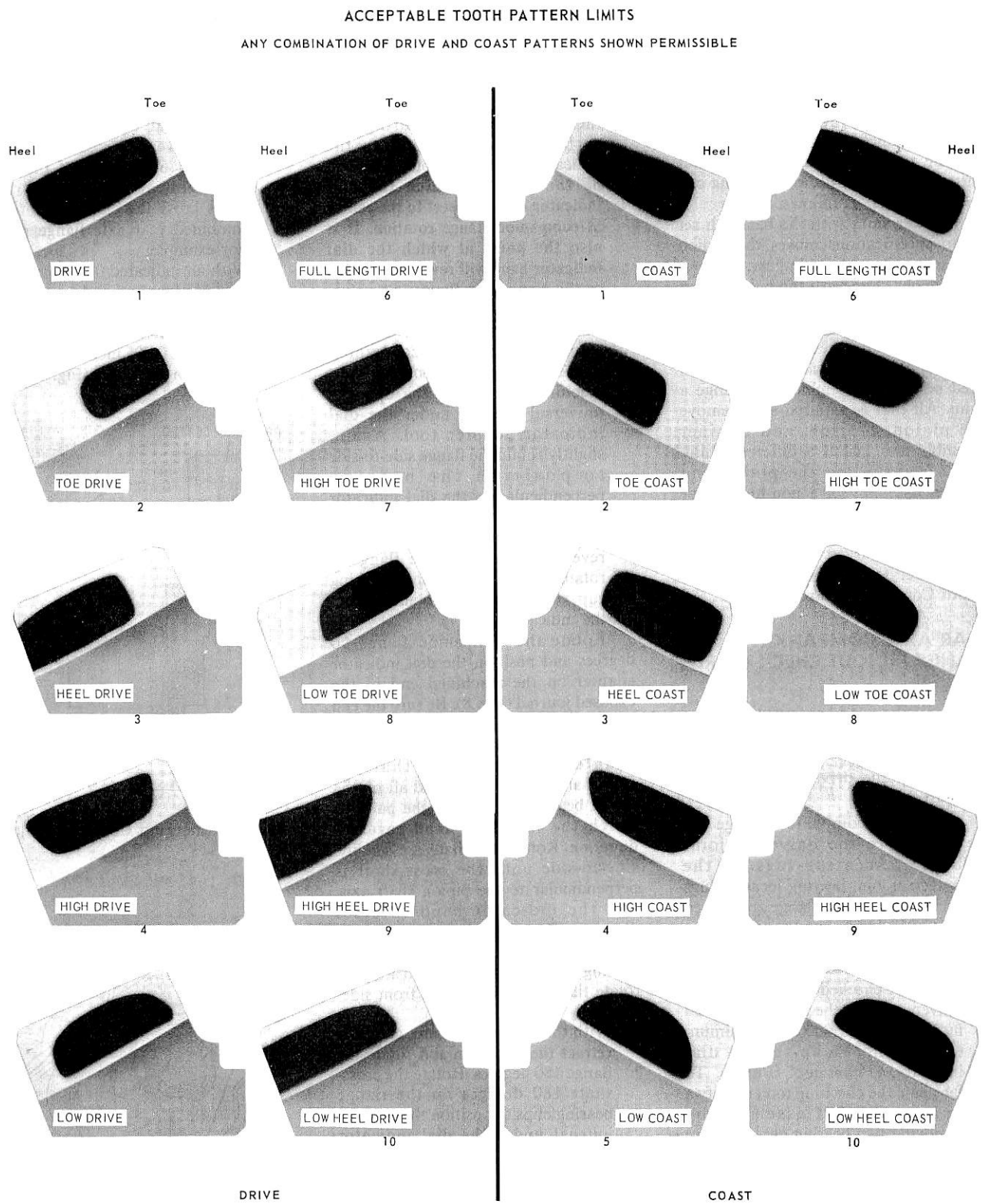

E 1680-A

FIG. 4 Typical Gear Tooth Contact Patterns—Ford

combination of drive and coast patterns shown in Fig. 4 are acceptable.

SHIM CHANGES

Since each gear set rolls a characteristic pattern, the patterns shown in Fig. 4 are considered acceptable and should be used as a guide. The drive pattern is rolled on the convex side of the tooth, and the coast pattern is rolled on the concave side.

The movement of tooth contact patterns with changes in shimming can be summarized as follows:

1. Thicker shim with the backlash set to specifications moves the pinion further from the ring gear.
2. Thinner shim with the backlash set to specifications moves the pinion closer to the ring gear.

If the patterns are not correct, make the changes as indicated. The pinion need not be disassembled to change a shim. All that is required is to remove the pinion, bearing, and retainer assembly and install a different shim. When reinstalling the pinion and retainer assembly of a non-hunting or partial non-hunting gear set, be sure that the marked tooth on the pinion indexes between the marked teeth on the ring gear. Refer to Pinion and Ring Gear Tooth Contact Adjustment.

REAR AXLE COMPANION FLANGE RUNOUT CHECK (FORD AXLES)

1. Raise the vehicle on a hoist that supports the rear axles (twin-post hoist).
2. Remove the drive shaft assembly (Part 15-60).
3. Check the companion flange for damage to the universal joint bearing locating lugs. If the universal joint bearing locating lugs on the companion flange are shaved (worn) or damaged, replace the companion flange (Fig. 5).
4. The rear axle companion flange runout is checked with a modified universal joint (checking tool) a dial indicator with 1.000 inch minimum travel, and a cup-shaped dial indicator adapter tool (Fig. 6). To fabricate the checking tool, modify a universal joint assembly by removing two bearing cups that are opposite each other, and cutting or grinding off one of the universal joint bearing flanges (Fig. 6).
5. Install the cup-shaped adapter on the dial indicator stem. Install the dial indicator on the pinion retainer or pinion nose bumper bracket. Position the indicator to allow an indication at the ends of the universal joint bearing cups and the remaining exposed journal of the cross-shaft.
6. Turn the companion flange so that the dial indicator cup-type adapter rests on the machined surface of the bearing cup (Fig. 6). Rotate the companion flange side-to-side slightly to obtain a reading indicating that the bearing cup surface is perpendicular to the indicator cup-type adapter. **This will be the point at which the dial indicator cup is closest to the center of companion flange rotation. It is also the point at which the dial indicator hand will reverse direction as the companion flange is turning.** Set the dial indicator to zero.
7. Carefully retract the dial indicator stem and rotate the companion flange 180 degrees to position the machined surface of the opposite universal bearing under the dial indicator adapter tool. Again, slightly rotate the flange side-to-side to position the bearing perpendicular to the dial indicator adapter. Again, this is the point at which the indicator hand will reverse direction as the flange is rotated. Record the flange bearing cup runout reading obtained from the indicator (Fig. 7).

Rotate the companion flange 90 degrees and position the dial indicator adapter on the machined end of the exposed journal (Fig. 8). **Be sure the end surface of the exposed journal is perpendicular to he indicator cup-type adapter.** This requires that the crossshaft be moved fore and aft on the flange bearing cups. **Note the point at which the indicator hand reverses direction.** Rotate the flange assembly side-to-side until the cross-shaft is perpendicular to the pinion shaft axis, and the indicator hand reverses direction. Zero, the dial indicator and check the zero point again by slightly moving the cross-shaft fore and aft, then rotate the companion flange from side-to-side.

8. With the indicator at zero, carefully retract the dial stem and rotate the flange 180 degrees. Rotate the cross-shaft 180 degrees on the flange bearing cups to position the exposed journal under the dial indicator adapter. Rock the cross-shaft fore and aft and the companion flange side-to-side to establish the point at which the indicator hand reverses direction. This will determine the drive shaft universal cross-shaft runout. Record this reading (Fig. 8).
9. **Repeat steps 5 through 8 at least three times and average the indicator readings obtained (Fig. 7).**
10. To determine the total (combined) companion flange runout, it will be necessary to use the combined runout chart (Fig. 9). Position a straight edge at the amount of flange bearing cup runout indicated on the left hand column of the chart. Position another straight edge vertically at the amount of drive shaft universal cross-shaft runout indicated on the top of the chart. The point at which the straight edges cross the chart indicates the combined rear axle flange runout. For example:

With an indicated 0.003 inch flange bearing cup runout and an indicated 0.004 inch universal cross-shaft runout (Fig. 8), the combined companion flange runout will be 0.005 inch as indicated in the square on the chart (Fig. 9).

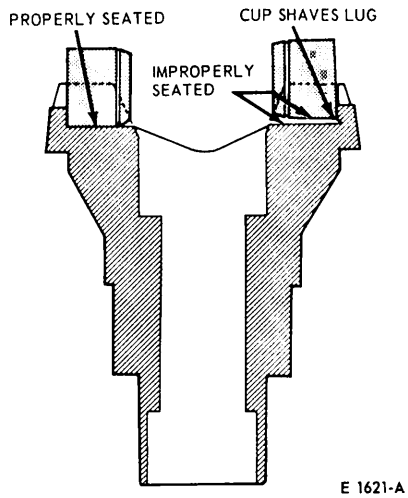

FIG. 5 Checking Companion Flange

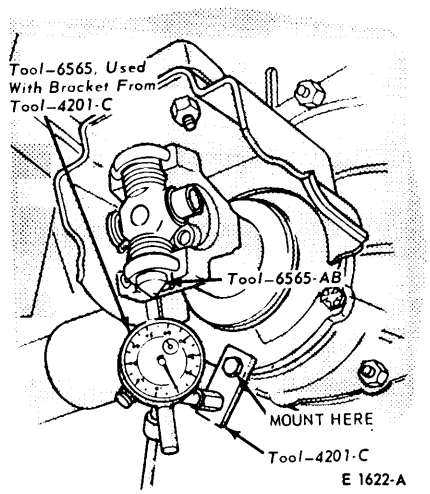

FIG. 6 Flange Bearing Cup Runout Check

11. If the reading obtained in Step 10 exceeds specifications, reposition the companion flange 180 degrees on the pinion shaft and repeat steps 1 through 11.
12. If the repeat readings still exceed specifications, reposition the flange an additional 90 degrees on the pinion shaft and check the runout (Steps 4 through 10).
13. If the runout is still excessive, replace the companion flange and check the runout. If necessary, rotate the new flange on the pinion shaft until an acceptable runout is obtained.

If excessive runout is still evident after replacement of the companion flange, it will be necessary to replace the ring and pinion gear, and repeat the above checks until runout is within specifications.

14. Install the drive shaft assembly (Part 15-60). **Make sure the universal joint bearing cups are properly positioned between the companion flange lugs.**
15. Lower the vehicle. Road test the vehicle. If drive shaft vibrations are evident during the road test, remove the drive shaft from the companion flange and rotate it 180 degrees. Road test the vehicle again.

REAR AXLE COMPANION FLANGE RUNOUT CHECK (DANA AXLES)

1. Raise the vehicle on a hoist that supports the rear axles (twin-post hoist).
2. Remove the drive shaft assembly (Part 15-60).
3. Check the companion flang for damage to the universal joint bearing locating lugs. If the universal joint bearing locating lugs on the companion flange are shaved (worn) or damaged, replace the companion flange (Fig. 5).
4. Install the drive shaft assembly (Part 15-60). Make sure the universal joint bearing cups are properly positioned between the companion flange lugs.
5. Lower the vehicle. Road test the vehicle. If drive shaft vibrations are evident during the road test, remove the drive shaft from the companion flange and rotate it 180 degrees. Road test the vehicle again.

TANDEM INTER-AXLE DIFFERENTIAL VACUUM OPERATED LOCKOUT CONTROL-LEAKAGE TEST

Place the vehicle on level ground with the parking brake released and the transmission in neutral. Start the engine with the valve control knob pulled out (the power divider differential locked out).

Accelerate the engine for a few seconds, release the accelerator, and turn off the ignition switch. Immediately measure the distance between the face of the lockout cylinder mounting bracket and the center of the push rod yoke to the lever pin. Then after ten minutes, measure the distance again. If the distance has not increased, the system may be considered vacuum tight. However, if the distance has increased, a vacuum leak exists in the system. First check all the connections. After all the hoses and the pipe connections have been checked and tightened, test the system again. If the vacuum leaks still exist, check the control valve and check valve assembly, and the power divider lockout cylinder in the order given.

Indicator Reading	Flange Bearing Cup Runout—Inch	Driveshaft Universal Cross-Shaft Runout—Inch
1	0.004	0.005
2	0.002	0.004
3	0.003	0.003
Average	0.003	0.004

CE1943-A

FIG. 7 Flange Bearing Cup and Cross-Shaft (v2) Runout Averaging Chart—Typical Readings

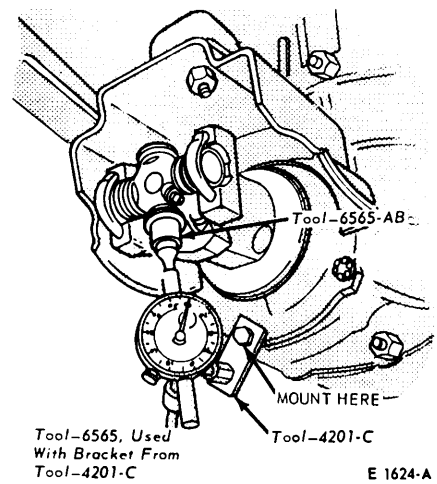

FIG. 8 Cross-Shaft Runout Check

EATON 2-SPEED TANDEM STRAIGHT-AIR SHIFT SYSTEM

A simple method for quickly locating troubles in the system can be accomplished by listening for possible air leaks and for sound which would indicate shift unit operation. Proceed as follows:

Turn ignition switch "ON" to energize and open solenoid valve. Move shifter knob to "HI". In this position, air pressure should be present in the entire system. Check for air leaks. With shifter knob in "LO", air pressure should be present only up to the shifter valve.

To check axle for shifting, operate shifter knob back and forth from "LO" to "HI". If the shift unit is operating, a definite reaction will be evident by sound of parts movement.

If air pressure is satisfactory and shift unit does not operate, it should be disassembled and repaired or replaced.

LOCKOUT

Inter-axle differential lockout will operate only when axles are in low range. With lockout engaged, air pressure is present from cab lockout valve through lockout control valve to lockout cylinder. Check for air leaks with lockout engaged. **If vehicle is in a standing position and power divider lockout does not operate, rock or drive vehicle back and forth to make certain the forward axle has completed the shift to low range before attempting to make any repairs.**

SPEEDOMETER ADAPTERS

To locate troubles in adapter operation, trace electrical circuit from ignition switch through circuit breaker, pressure switches to adapters. Also make sure adapter ground connection is satisfactory.

Flange Bearing Cup Runout	Drive Shaft Universal Cross-Shaft Runout—Inch								
	0.000	0.001	0.002	0.003	0.004	0.005	0.006	0.007	0.008
0.000	0.000	0.001	0.002	0.003	0.004	0.005	0.006	0.007	0.008
0.001	0.001	0.0013	0.0022	0.0032	0.0042	0.0051	0.0061	0.0071	0.0081
0.002	0.002	0.0022	0.0027	0.0037	0.0045	0.0053	0.0062	0.0072	0.0082
0.003	0.003	0.0032	0.0036	0.0042	0.005	0.0058	0.0067	0.0077	0.0085
0.004	0.004	0.0042	0.0045	0.005	0.0057	0.0064	0.0072	0.0081	0.009
0.005	0.005	0.0051	0.0053	0.0058	0.0063	0.0071	0.0078	0.0087	0.0094
0.006	0.006	0.0061	0.0062	0.0068	0.0072	0.0078	0.0085	0.0092	0.010
0.007	0.007	0.0071	0.0073	0.0075	0.0081	0.0087	0.0093	0.0099	0.0103
0.008	0.008	0.0081	0.0082	0.0087	0.009	0.0094	0.010	0.0104	0.011

The total (combined) companion flange runout is located in the square where the columns containing the flange bearng cup runout and universal cross shaft runout readings intersect.

CE1944-A

FIG. 9 Companion Flange Combined Runout Chart

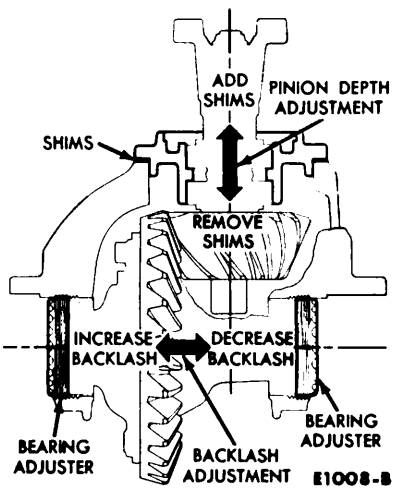

FIG. 10 Pinion and Ring Gear Tooth Contact Adjustment—Except Dana

PINION AND RING GEAR TOOTH CONTACT ADJUSTMENTS (ALL EXCEPT DANA)

Two adjustments affect pinion and ring gear tooth contact. They are pinion depth and backlash (Fig. 10).

The pinion depth adjusting shims are installed between the pinion bearing retainer or cage and the carrier housing; therefore, adding shims would move the pinion out away from the ring gear, and removing shims would move the pinion in toward the ring gear.

The bearing adjusters locate the differential and ring gear assembly in the carrier housing. Tightening the bearing adjuster on the ring gear side of the carrier moves the differential and ring gear into the pinion to decrease backlash. Tightening the bearing adjuster on the pinion side of the carrier moves the ring gear away from the pinion to increase backlash. To move the ring gear away from, or toward, the pinion, loosen one adjuster and tighten the other adjuster the same amount.

SHIM SELECTION

Individual differences in matching the carrier housing and the gear set requires a shim between the pinion bearing retainer sleeve and the carrier housing to locate the pinion for correct tooth contact with the ring gear. In order to adjust the shim pack to the correct thickness for a given gear seat, each pinion gear is marked with an adjustment number (individual variation from nominal dimension) such as the 10 marking (Rockwell) and the 3 marking (Eaton) shown in Fig. 11.

Shim thickness for Ford gears is determined by the gear pattern check. Add or remove shims from the original or nominal shim pack, as required, until a proper gear pattern is established. Adding shims will move the pinion away from the ring gear and removing shims will move the pinion toward the ring gear.

If the original ring gear and pinion are used in reassembly, use the original shim pack removed during disassembly.

When replacing a ring gear and pinion, it should be noted that the original factory installed shim is of the correct thickness to adjust for individual variations in both the carrier housing dimension and in the original gear set dimensions; therefore, to select the correct shim thickness for the new gear set to be installed, follow these steps:

1. Measure the thickness of the **original shim** with a micrometer.
2. Note the shim adjustment number on both old pinion and new pinion.
3. Refer to Fig. 12 to determine the correct amount of shim thickness change. The amount shown in Fig. 9, under the old pinion shim adjustment number and in line with the new pinion number is the amount of **change that should be made to the original shim thickness if the old pinion is marked 14, for example, and the new pinion is marked -5, the table indicates that 0.019 inch of shim stock should be removed for the original shim pack.**

If the original shim pack was lost or if a new carrier housing is being installed (Eaton axles only), substitute a **nominal** shim for the original, and follow the foregoing procedure for a trial buildup, see Specifications in this manual. If any further shim change is necessary, it will be indicated in the tooth pattern check.

In the case of a Rockwell axle with a lost **original** shim pack or new carrier installation, install a 0.0250.030 inch shim pack for a trial build-up, and run a tooth pattern. The tooth pattern will indicate how much this shim pack should be increased or decreased.

In any Rockwell axle, the shim pack should consist of at least three shims one of which should be thin. Position the thin shim next to the carrier.

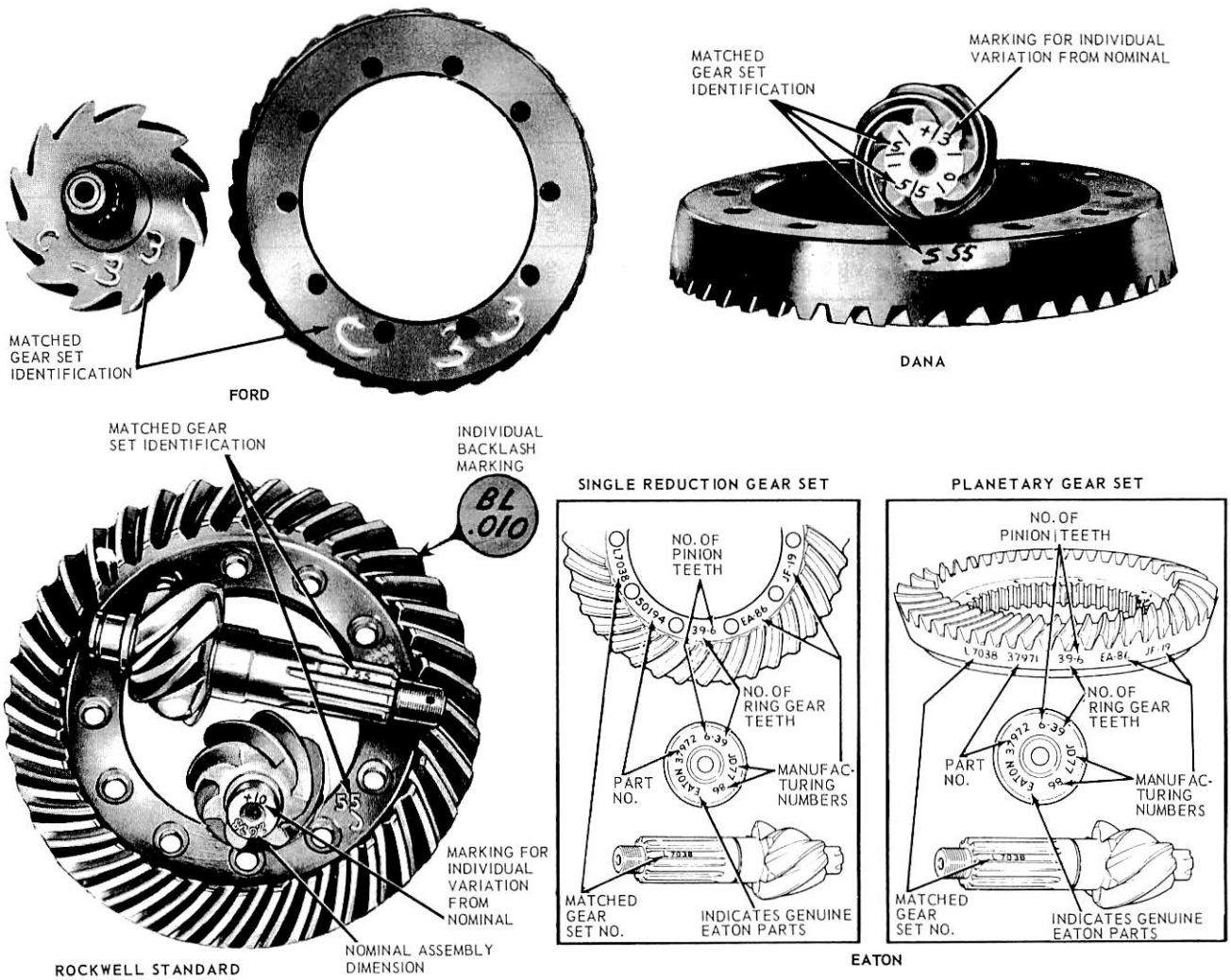

E 1766-A

FIG. 11 Typical Pinion and Ring Gear Set Marking

DIFFERENTIAL BEARING PRELOAD AND BACKLASH—ALL EATON AXLES, ROCKWELL STANDARD SINGLE REDUCTION AXLE

1. Mesh the ring gear and pinion with a slight amount of backlash.
2. Set the differential bearing adjusters in the carrier bearing pocket threads, so that they just contact the bearing cups.
3. Carefully position the bearing caps on the carrier. Match the marks made when the caps are removed.
4. Install the hardened flat washers (if so equipped), bearing cap bolts or stud nuts, and alternately tighten them to specified torque. The bolts must be torqued to specifications to be sure that the bearing cups and adjusters are seated. Check the adjusters for freedom of movement as the bolts are tightened. If the adjusters do not turn freely, remove the bearing caps and again inspect for damaged threads or incorrectly positioned caps.
5. On a Rockwell single reduction axle, the adjusters and bearing cups should move easily with the caps tightened to specified torque. On an Eaton axle, loosen the bearing cap bolts or stud nuts until the adjusters and bearing cups can be moved easily.
6. Alternately tighten the bearing adjusters until there is some backlash between the ring gear and pinion and there is some preload on the bearings (Fig. 13). While the bearings are preloaded, rotate the ring gear several turns in each direction to seat the bearing rollers in the cups. **This bearing roller seating is important.**
7. Loosen the bearing adjusters until they are clear of the bearing cups, then tighten them until they just touch the bearing cups.
8. Install a dial indicator on the carrier housing with the button against the back face of the ring gear (Fig. 13).
9. Adjust the differential end play to zero without preloading the differential bearings.
10. From a zero end play and zero preload condition, tighten each bearing adjusting nut one notch to preload the bearings.

New Pinion Marking	OLD PINION MARKING																														
	-15	-14	-13	-12	-11	-10	-9	-8	-7	-6	-5	-4	-3	-2	-1	0	+1	+2	+3	+4	+5	+6	+7	+8	+9	+10	+11	+12	+13	+14	+15
-15	+.030	+.029	+.028	+.027	+.026	+.025	+.024	+.023	+.022	+.021	+.020	+.019	+.018	+.017	+.016	+.015	+.014	+.013	+.012	+.011	+.010	+.009	+.008	+.007	+.006	+.005	+.004	+.003	+.002	+.001	0
-14	+.029	+.028	+.027	+.026	+.025	+.024	+.023	+.022	+.021	+.020	+.019	+.018	+.017	+.016	+.015	+.014	+.013	+.012	+.011	+.010	+.009	+.008	+.007	+.006	+.005	+.004	+.003	+.002	+.001	0	-.001
-13	+.028	+.027	+.026	+.025	+.024	+.023	+.022	+.021	+.020	+.019	+.018	+.017	+.016	+.015	+.014	+.013	+.012	+.011	+.010	+.009	+.008	+.007	+.006	+.005	+.004	+.003	+.002	+.001	0	-.001	-.002
-12	+.027	+.026	+.025	+.024	+.023	+.022	+.021	+.020	+.019	+.018	+.017	+.016	+.015	+.014	+.013	+.012	+.011	+.010	+.009	+.008	+.007	+.006	+.005	+.004	+.003	+.002	+.001	0	-.001	-.002	-.003
-11	+.026	+.025	+.024	+.023	+.022	+.021	+.020	+.019	+.018	+.017	+.016	+.015	+.014	+.013	+.012	+.011	+.010	+.009	+.008	+.007	+.006	+.005	+.004	+.003	+.002	+.001	0	-.001	-.002	-.003	-.004
-10	+.025	+.024	+.023	+.022	+.021	+.020	+.019	+.018	+.017	+.016	+.015	+.014	+.013	+.012	+.011	+.010	+.009	+.008	+.007	+.006	+.005	+.004	+.003	+.002	+.001	0	-.001	-.002	-.003	-.004	-.005
-9	+.024	+.023	+.022	+.021	+.020	+.019	+.018	+.017	+.016	+.015	+.014	+.013	+.012	+.011	+.010	+.009	+.008	+.007	+.006	+.005	+.004	+.003	+.002	+.001	0	-.001	-.002	-.003	-.004	-.005	-.006
-8	+.023	+.022	+.021	+.020	+.019	+.018	+.017	+.016	+.015	+.014	+.013	+.012	+.011	+.010	+.009	+.008	+.007	+.006	+.005	+.004	+.003	+.002	+.001	0	-.001	-.002	-.003	-.004	-.005	-.006	-.007
-7	+.022	+.021	+.020	+.019	+.018	+.017	+.016	+.015	+.014	+.013	+.012	+.011	+.010	+.009	+.008	+.007	+.006	+.005	+.004	+.003	+.002	+.001	0	-.001	-.002	-.003	-.004	-.005	-.006	-.007	-.008
-6	+.021	+.020	+.019	+.018	+.017	+.016	+.015	+.014	+.013	+.012	+.011	+.010	+.009	+.008	+.007	+.006	+.005	+.004	+.003	+.002	+.001	0	-.001	-.002	-.003	-.004	-.005	-.006	-.007	-.008	-.009
-5	+.020	+.019	+.018	+.017	+.016	+.015	+.014	+.013	+.012	+.011	+.010	+.009	+.008	+.007	+.006	+.005	+.004	+.003	+.002	+.001	0	-.001	-.002	-.003	-.004	-.005	-.006	-.007	-.008	-.009	-.010
-4	+.019	+.018	+.017	+.016	+.015	+.014	+.013	+.012	+.011	+.010	+.009	+.008	+.007	+.006	+.005	+.004	+.003	+.002	+.001	0	-.001	-.002	-.003	-.004	-.005	-.006	-.007	-.008	-.009	-.010	-.011
-3	+.018	+.017	+.016	+.015	+.014	+.013	+.012	+.011	+.010	+.009	+.008	+.007	+.006	+.005	+.004	+.003	+.002	+.001	0	-.001	-.002	-.003	-.004	-.005	-.006	-.007	-.008	-.009	-.010	-.011	-.012
-2	+.017	+.016	+.015	+.014	+.013	+.012	+.011	+.010	+.009	+.008	+.007	+.006	+.005	+.004	+.003	+.002	+.001	0	-.001	-.002	-.003	-.004	-.005	-.006	-.007	-.008	-.009	-.010	-.011	-.012	-.013
+1	+.016	+.015	+.014	+.013	+.012	+.011	+.010	+.009	+.008	+.007	+.006	+.005	+.004	+.003	+.002	+.001	0	-.001	-.002	-.003	-.004	-.005	-.006	-.007	-.008	-.009	-.010	-.011	-.012	-.013	-.014
0	+.015	+.014	+.013	+.012	+.011	+.010	+.009	+.008	+.007	+.006	+.005	+.004	+.003	+.002	+.001	0	-.001	-.002	-.003	-.004	-.005	-.006	-.007	-.008	-.009	-.010	-.011	-.012	-.013	-.014	-.015
-1	+.014	+.013	+.012	+.011	+.010	+.009	+.008	+.007	+.006	+.005	+.004	+.003	+.002	+.001	0	-.001	-.002	-.003	-.004	-.005	-.006	-.007	-.008	-.009	-.010	-.011	-.012	-.013	-.014	-.015	-.016
-2	+.013	+.012	+.011	+.010	+.009	+.008	+.007	+.006	+.005	+.004	+.003	+.002	+.001	0	-.001	-.002	-.003	-.004	-.005	-.006	-.007	-.008	-.009	-.010	-.011	-.012	-.013	-.014	-.015	-.016	-.017
-3	+.012	+.011	+.010	+.009	+.008	+.007	+.006	+.005	+.004	+.003	+.002	+.001	0	-.001	-.002	-.003	-.004	-.005	-.006	-.007	-.008	-.009	-.010	-.011	-.012	-.013	-.014	-.015	-.016	-.017	-.018
-4	+.011	+.010	+.009	+.008	+.007	+.006	+.005	+.004	+.003	+.002	+.001	0	-.001	-.002	-.003	-.004	-.005	-.006	-.007	-.008	-.009	-.010	-.011	-.012	-.013	-.014	-.015	-.016	-.017	-.018	-.019
-5	+.010	+.009	+.008	+.007	+.006	+.005	+.004	+.003	+.002	+.001	0	-.001	-.002	-.003	-.004	-.005	-.006	-.007	-.008	-.009	-.010	-.011	-.012	-.013	-.014	-.015	-.016	-.017	-.018	-.019	-.020
-6	+.009	+.008	+.007	+.006	+.005	+.004	+.003	+.002	+.001	0	-.001	-.002	-.003	-.004	-.005	-.006	-.007	-.008	-.009	-.010	-.011	-.012	-.013	-.014	-.015	-.016	-.017	-.018	-.019	-.020	-.021
-7	+.008	+.007	+.006	+.005	+.004	+.003	+.002	+.001	0	-.001	-.002	-.003	-.004	-.005	-.006	-.007	-.008	-.009	-.010	-.011	-.012	-.013	-.014	-.015	-.016	-.017	-.018	-.019	-.020	-.021	-.022
-8	+.007	+.006	+.005	+.004	+.003	+.002	+.001	0	-.001	-.002	-.003	-.004	-.005	-.006	-.007	-.008	-.009	-.010	-.011	-.012	-.013	-.014	-.015	-.016	-.017	-.018	-.019	-.020	-.021	-.022	-.023
-9	+.006	+.005	+.004	+.003	+.002	+.001	0	-.001	-.002	-.003	-.004	-.005	-.006	-.007	-.008	-.009	-.010	-.011	-.012	-.013	-.014	-.015	-.016	-.017	-.018	-.019	-.020	-.021	-.022	-.023	-.024
-10	+.005	+.004	+.003	+.002	+.001	0	-.001	-.002	-.003	-.004	-.005	-.006	-.007	-.008	-.009	-.010	-.011	-.012	-.013	-.014	-.015	-.016	-.017	-.018	-.019	-.020	-.021	-.022	-.023	-.024	-.025
-11	+.004	+.003	+.002	+.001	0	-.001	-.002	-.003	-.004	-.005	-.006	-.007	-.008	-.009	-.010	-.011	-.012	-.013	-.014	-.015	-.016	-.017	-.018	-.019	-.020	-.021	-.022	-.023	-.024	-.025	-.026
-12	+.003	+.002	+.001	0	-.001	-.002	-.003	-.004	-.005	-.006	-.007	-.008	-.009	-.010	-.011	-.012	-.013	-.014	-.015	-.016	-.017	-.018	-.019	-.020	-.021	-.022	-.023	-.024	-.025	-.026	-.027
-13	+.002	+.001	0	-.001	-.002	-.003	-.004	-.005	-.006	-.007	-.008	-.009	-.010	-.011	-.012	-.013	-.014	-.015	-.016	-.017	-.018	-.019	-.020	-.021	-.022	-.023	-.024	-.025	-.026	-.027	-.028
-14	+.001	0	-.001	-.002	-.003	-.004	-.005	-.006	-.007	-.008	-.009	-.010	-.011	-.012	-.013	-.014	-.015	-.016	-.017	-.018	-.019	-.020	-.021	-.022	-.023	-.024	-.025	-.026	-.027	-.028	-.029
	0	-.001	-.002	-.003	-.004	-.005	-.006	-.007	-.008	-.009	-.010	-.011	-.012	-.013	-.014	-.015	-.016	-.017	-.018	-.019	-.020	-.021	-.022	-.023	-.024	-.025	-.026	-.027	-.028	-.029	-.030

CE1986-B

FIG. 12 Drive Pinion Adjusting Shim Thickness Change—Inches (All except Dana)

11. Mount the indicator to check the pinion and ring gear backlash (Fig. 14). Check the backlash at four equally-spaced points on the ring gear.
12. To reduce backlash loosen the pinion side adjuster and tighten the ring gear side adjuster the same number of notches, in order to maintain the preload. To increase backlash, perform the same operation in reverse.

When moving the adjusters, the final movement should always be made in a tightening direction. For example, if one adjuster is to be loosened one notch, loosen it two notches, then tighten it one. This procedure makes certain that the adjuster is contacting the bearing cup, and that the cup will not shift after being put in service.

13. On the Rockwell single reduction axle, the backlash should be set to the same adjustment as before disassembly, if the original gears are being used. If new gears are being installed, adjust to the **BL marking on the ring gear (Fig. 11), and run a tooth pattern check. If the pattern is unsatisfactory at the marked setting, adjust the backlash to the best tooth contact pattern with the limits given in Specifications.**
14. On Eaton axles, adjust the backlash to the best tooth contact pattern within the limits given in Specifications.

PINION BEARING PRELOAD ADJUSTMENT—EATON AND ROCKWELL AXLES

There are two methods of checking pinion preload adjustment.

In one method, the pinionand bearing retainer are completely assembled without the oil seal, and the pinion shaft nut is tightened to specified torque. The preload on the opposed, tapered bearings is then checked by measuring the torque required to rotate the bearings. This can be done by holding the bearing retainer and turning the pinion shaft, or holding the pinion shaft and turning the pinion bearing retainer. The suggested procedure is to clamp the universal joint flange in a vise, and wrap a strong cord around the pinion bearing retainer. Attach a pound pull scale to the cord. Note the pull required to keep the bearing retainer rotating. The pull required to start the retainer moving is disregarded. The reading on the pull-scale multiplied by one-half the diameter (radius) of the bearing retainer at the point the cord is wrapped (in inches) is the in-lb torque.

Pinion bearing preload torque specifications for all axles are given in Specifications.

Pinion bearing preload on these axles is adjusted by installing spacers or various lengths. A shorter spacer increases preload and a longer spacer decreases preload. Usually the original spacer is installed for a trial build-up. Since the original spacer has no identifying mark, it must be measured with a micrometer to determine its length.

The other method of checking pinion bearing preload is to assemble the pinion and bearing retainer, except for the universal joint flange and pinion shaft nut and flat washer. A pinion bearing cone replacer tool is placed over the pinion shaft so that pressure from the press ram can be brought to bear on the tapered roller bearing cones and the bearing spacer. The assembly is then put under a press (Fig. 11). See Specifications at end of this part. While the proper pressure (in tons) is being applied by the press ram, check the torque required to rotate the pinion retainer (Fig. 15). Use a strong cord and pound pull-scale to check the torque.

Note the pull required to keep the bearing retainer rotating. Disregard the pull required to start the retainer moving. The reading on the pull-scale multiplied by one-half the diameter (radius) of the bearing retainer at the point cord is wrapped (in inches) is the in-lb torque.

RING GEAR REPLACEMENT

If a riveted ring gear is to be replaced, center punch the rivet heads on the ring gear end of the rivets. Drill through the rivet heads (Fig. 16) using a drill 1/32 inch smaller than the rivet body. Press out the rivets, then remove the ring gear.

Carefully examine the gear mounting surface and locating flange for high spots, which may have been caused by the old rivet removal. Remove any high spots with a flat hard stone.

Special bolts and nuts should be used instead of rivets to attach the new ring gear to the differential case.

On Eaton axles with riveted ring gears, be sure the bolts used to attach the new ring gear to the differential case are grade 8 bolts. These bolts can be identified by a 6-spoke marking forged on the head of the bolt. Torque to specifications.

Place the new ring gear on the differential case and insert the bolts through the ring gear and into the case.

The bolt heads are installed in the counterbore on the gear tooth side of the

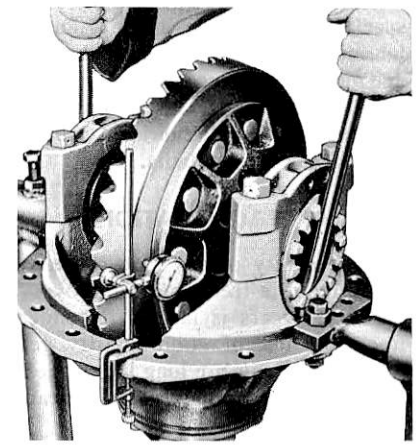

E 1774-A

FIG. 13 Differential End Play and Pre-Load Check

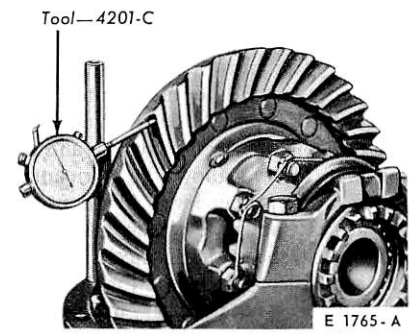

FIG. 14 Backlash Check

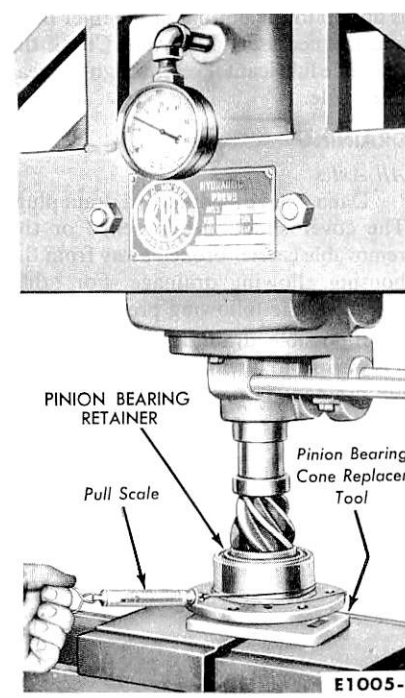

FIG. 15 Pinion Bearing Pre-Load Check

ring gear. The torque limits for these special bolts and nuts, apply to threads lubricated with engine oil. If the bolts and nuts are tightened while dry, add 10 to the limits. If the threads are lubricated with axle lubricant subtract 10 from the torque limits.

REAR AXLE LUBRICATION

The ability of any axle to deliver quiet trouble-free operation over a period of years is largely dependent upon the use of good quality gear lubricants. To insure long life for gears and bearings, use only gear lubricants specified.

Where magnetic drain plugs are used, the plugs should be cleaned or replaced each time the lubricant is changed.

All Axles Except Ford and Tandem

Remove the rear filler hole plug. The lubricant should be level with the bottom of the hole.

Tandem Drive Axles

The axle must be run first, then allowed to stand for 5 minutes. The power divider and the forward rear axle use the same lubrication system and the 5-minute interval allows the lubricant to settle to the proper levels in the power divider case and axle housing. After the 5 minutes, check the lubricant level in the rear filler hole in the forward rear axle only. It is not necessary to check the oil level in the power divider. If the level is up to the bottom of the filler hole of the forward rear axle, the power divider is also adequately lubricated. If the level is not up to the bottom of the filler hole, add the necessary lubricant. Check the rear axle lubricant level through the rear filler hole.

DRAINING

All Axles

Dana axles do not have a drain plug. The cover should be loosened or the removable carrier broken away from the housing allowing drainage. For other axles, use the following procedure:

If possible, drain the lubricant when it is warm and it will run freely, allowing full drainage in minimum time. This is especially desirable in cold weather.

To drain, unscrew the plug at the bottom of the housing and allow sufficient time for all the old oil to run out. On tandem drive axles, it is also necessry to unscrew the plug at the bottom of the power divider for drainage of lubricant in the power divider.

FILLING

Single Reduction Axles—Ford Axle

With the filler hole in the housing cover, fill to the bottom of the filler hole. If the filler hole is in the carrier casting, also fill to the bottom of the filler hole.

To check these axles for proper lubricant level, the filler plug should be backed out slowly. If seepage occurs around the threads of the filler plug, the plug should immediately be turned back in to avoid any drainage. This condition indicates that the specified amount of lubricant is present in the axle.

OTHERS

Fill the axle through the rear filler hole until oil flows from the bottom of the hole. After filling the axle with the specified amount of lubricant, install the oil filler hole plug.

2-Speed and Planetary Double Reduction Axles

Fill the axle through the rear filler hole with the specified amount of lubricant (lubricant should be at the level on the bottom of the filler hole), then install the filler hole plug. If the carrier assembly oil channels are dry, one pint of lubricant should be added through the front filler hole.

Tandem Drive Axles

Fill both axles with the specified amount until the lubricant is level with the bottom of the rear filler hole, and then add the specified amount to the inter-axle differential power divider through the filler hole located in the inter-axle differential power divider case.

Eaton D-Series Tandem drive Axles

Fill the forward drive axle until the oil is level with the bottom of the filler hole in the rear cover. Then, add two pints through the forward filler hole

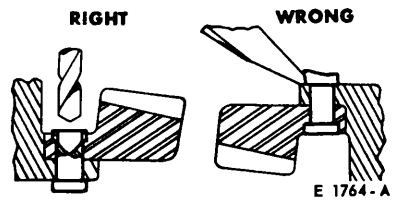

FIG. 16 Removing Ring Gear Rivets

located slightly offset to the right in the top portion of differential carrier. **Do not use the rear hole at the top of the differential carrier as an oil filler hole. Fill the rear axle in accordance with instructions for single reduction, 2-speed or planetary double reduction, depending on the type of axle used.**

REAR WHEEL BEARING AND SEAL REMOVAL AND INSTALLATION

Two types of rear wheel bearing assemblies are used in Ford truck axles. In the semi-floating type axles used in the light series a single outer bearing is used, and is held in place by a retainer. This bearing is attached to the axle shaft and part of the vehicle load is carried on the axle shaft. Refer to Part 11-11 for Removal and Installation details. In the full floating type axle used in the heavier series, double tapered roller bearings are mounted on the axle housing. Vehicle load is carried on the housing and not the shaft. The shaft can therefore be removed without disturbing the bearing.

Wheel bearings of the light Series, semi-floating axles are lubricated at assembly with a special lubricant, and require no further maintenance. A seal is installed behind the bearing to prevent axle lubricant leakage to the bearing. **Replace this seal whenever the hub and drum are removed from the axle. See Part 11-11.**

On all the full-floating axle wheel hubs with tapered roller bearings, a seal is installed behind the inner bearing to keep the wheel bearing lubricant from the brake lining and brake drum. See Part 11-14.

CLEANING AND INSPECTION

INSPECTION BEFORE DISASSEMBLY OF CARRIER

An inspection of the adjustments and parts as the carrier is disassembled can assist in learning the cause of the trouble and in determining what corrections are needed.

Mount the carrier in a holding fixture. Wipe the lubricant from the internal working parts and visually inspect them for damage. Rotate the gears to see if there is any roughness which could indicate worn or damaged bearings or chipped gear. Look carefully at the surface of the gear teeth for any scoring, flaking, or signs of abnormal wear.

Set up a dial indicator (Fig. 11) and check blacklash at several points around the ring gear. Backlash limits for each axle are given in Fig. 12.

If no obvious misadjustment or damage is noted, inspect the gear tooth contact. Coat the gear teeth with the special compound furnished with each service ring gear and pinion (Fig. 17). Too fluid a mixture will run and smear. Too dry a mixture cannot be squeezed out from between the teeth. As shown in Fig. 18, rotate the ring gear back and forth (use a box wrench on the ring gear attaching bolts for a lever), until a clean tooth contact pattern is obtained.

On the larger axles (Fig. 17), it may be desirable to roll a pattern by turning the pinion gear with a wrench on the pinion shaft nut. A sharper pattern will be obtained if a flat steel bar is held lightly against the ring gear to act as a brake.

Certain types of gear tooth contact patterns on the ring gear indicate incorrect adjustment. A noise condition caused by incorrect adjustment can often be corrected by readjusting the gears. Typical patterns and the necessary corrections are shown in Figs. 1 and 2. Gear tooth runout can be detected by an erratic pattern on the teeth. If ring gear runout is suspected, mount a dial indicator to measure the runout of the back face of the ring gear (Fig. 19).

INSPECTION AFTER DISASSEMBLY OF CARRIER

Thoroughly clean all parts. **Synthetic seals must not be soaked or washed in cleaning solvents. Use only clean solvent to wash the bearings. Oil the bearings immediately after cleaning to prevent rusting. A visual inspection of parts will detect any major wear or damage. Clean the inside of the carrier and carrier housing, before rebuilding and assembling the parts. Inspect individual parts as outlined below.**

Gears

Examine the pinion and ring gear teeth for scoring or signs of excessive wear. The pattern taken during disassembly should be helpful in judging if gears can be reused. Worn gears cannot be rebuilt to correct a noisy condition. Gear scoring and flaking are the result of excessive shock loading or the use of an incorrect lubricant. Scored gears cannot be reused.

Examine the teeth and thrust surfaces of the differential gears. Wear on the hub of the differential side gears can cause a chucking noise known as chuckle, when the vehicle is operated at low speeds. Wear of splines, thrust surfaces or thrust washers can contribute to excessive drive line backlash.

Bearing Cups

Check the bearing cups for rings, scores, galling, or erratic wear patterns. The pinion cups must be solidly seated. Check by attempting to insert a 0.0015 inch feeler gauge between the cups and the bottom of their bores.

Cone and roller Assemblies

When operated in the cups, the cone and roller assemblies must turn without any roughness. Examine the roller ends for wear. Step-wear on the roller ends indicates the bearings did not have enough preload, or the rollers were slightly cocked.

Differential Bearing Adjusters

Temporarily install the bearing caps and test the fit of the bearing adjusters in their threads. The adjusters on a Rockwell axle should turn easily when the caps are tightened to specifications.

The faces of the adjusters that contact the bearing cups must be smooth and square. Polish these with a fine abrasive on a flat surface. Replace the adjusters or examine the threads in the carrier if their fit is not proper. **Be sure the bearing caps are on the side they were machined to fit.**

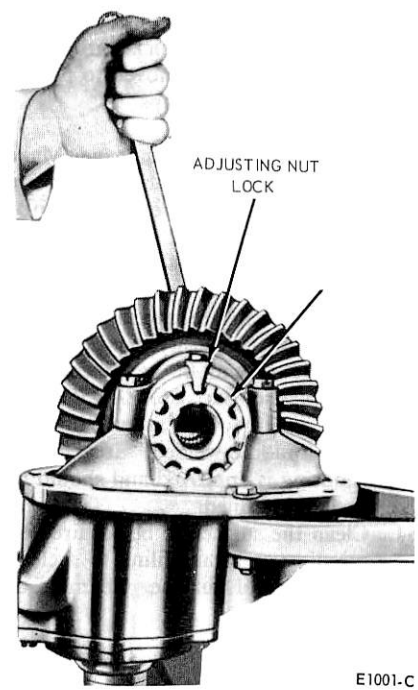

FIG. 18 Gear tooth contact Pattern Check—Ford

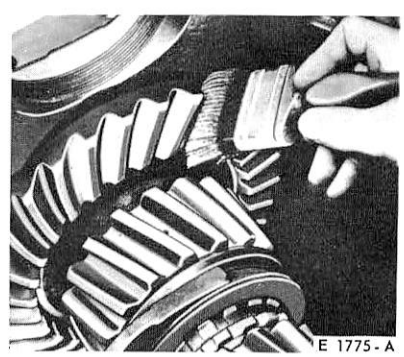

FIG. 17 Rear Wheel Hub—Ford Semi-Floating Axle

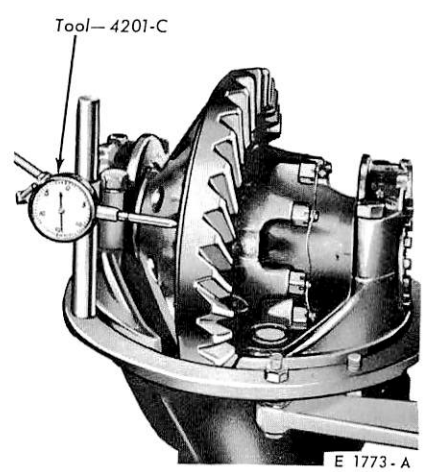

FIG. 19 Ring Gear runout Check—Typical

Universal Joint Flange

Be sure the gears of the flange have not been damaged in removing the drive shaft or in removing the flange from the axle. The end of the flange that contacts the oil slinger or pinion front bearing or flange, must be smooth. Polish this face if necessary. Roughness aggravates backlash noises, and causes wear on the slinger with a resultant loss in pinion bearing preload.

Pinion Retainer

Inspect visually for damage. Be sure the pinion bearing cups are seated. Be sure there are no chips or burrs on the mounting flange. Clean all lubricant passages. If the pinion bearing cups were removed, examine the bores in the retainer carefully. Any nicks or burrs in these bores must be removed to permit proper seating of the cups.

Carrier Housing

Inspect visually for damage. Make sure the differential bearing bores are smooth and the threads are not damaged. Remove any nicks or burrs from the mounting surfaces of the carrier housing.

Axle lubricant leakage in Dana axle housings, due to porosity, sand holes, or small cracks, can be repaired with metallic plastic (part C6AZ-19554-A).

Only repairs to the cast axle housing and the "puddle-welded" area of the axle housing is approved and should be repaired as outlined:

1. Clean the surface to be repaired by grinding or rotary filing to a clean bright metal surface. Chamfer or undercut the hole or porosity to a greater depth than the rest of the cleaned surface. Solid metal must surround the hole. Openings larger than 1/4 inch should not be repaired using metallic plastic.

   Openings in excess of 1/4 inch can be drilled, tapped and plugged using common tools. Clean the repair area thoroughly. Metallic plastic will not stick to a dirty or oily surface.
2. Mix the metallic plastic base and hardener as directed on the container. Stir thoroughly until uniform.
3. Apply the repair mixture with a suitable clean tool, (putty knife, wood spoon, etc.) forcing the epoxy into the hole or porosity.
4. Allow the repair mixture to harden. This can be accomplished by two methods -heat cure with a 250 watt lamp placed 10 inches from the repaired surface, or air dry for 10-12 hours at temperatures above 50 degrees F.
5. Sand or grind the repaired area to blend with the general contour of the surrounding surface.
6. Paint the surface to match the rest of the axle housing.

Further information on the above procedure is available in Group 21, Part-01 in Volume II of the Truck Shop Manual.

Differential Case

Make sure the hubs where the bearings mount are smooth. Check the fit of the differential gears in the counterbores. Examine carefully the thrust surfaces, which are sometimes damaged when the bearings are removed. If the bearing assemblies do not seat firmly on the hubs, failure is certain. Be sure the mating surfaces of the two parts of the case and the face of the ring gear attaching flange are smooth and free from nicks or burrs.

Ring Gear Runout

If the ring gear runout check during disassembly exceeded specifications, the condition may be caused by a warped gear, a distorted or damaged case, or by excessively worn differential bearings.

To determine the cause of the excessive runout, assemble the differential case **without the ring gear,** and make the checks outlined in the following paragraphs.

Press the differential side bearings on the case hubs, and install the case in the differential carrier. Install the bearing caps and torque the cap bolts to specifications. Mount a dial indicator, and then check the runout of the case flange and ring gear pilot. If the runout does not now exceed specifications, install a new ring gear to the case. If the runout at either point is excessive, the gear is probably true and the condition is due to either the case or differential side bearings.

Install new differential side bearings on the case hubs and install the case in the carrier. Check the case runout. If the runout is still excessive, repair or replace the case.

SPECIFICATIONS

REAR AND FRONT DRIVING AXLE LUBRICANT CAPACITIES

Single-Speed Axle

Make and Model	Approximate Capacity (Pints) ① U.S. Measure	Imperial Measure
Ford All	5	4-1/8
Dana 441F	3-1/2	3
Dana 60 and 60-3E	6	5
Dana 70	6-1/2	5-3/8
Dana 44-6CF & 44-6CFHD (Front Axles)	3-3/4 ②	3
Dane 44-7F (Front Axle)	4-1/2 ③	3-3/4
Eaton 17101, 17121 ⑤	31	26
Eaton 18101, 18121 ⑤	33-1/2	27-1/2
Eaton 18301 ⑤	33	27-1/2
Eaton 19121 ⑤	35-1/2	29-1/2
Rockwell C-100 & D-100 ⑤	12-1/2	10-3/8
Rockwell F-106 ⑤	13-1/2	10-7/8
Rockwell H-170 ⑤	26-1/2	21-5/8
Rockwell R-171B ⑤	44-1/2	37-1/2
Rockwell Q-246A ⑤ ⑥	36	30
Rockwell FDS-75 ④	13	10-7/8

① Quantities listed are approximate. Axle should be filled until lubricant is level with bottom of filler hole with vehicle in normal operating position
② F-250 4-Wheel Drive
③ F-100 4-Wheel Drive

Two-Speed Axle

Make and Model	Approximate Capacity (Pints) ① U.S. Measure	Imperial Measure
Eaton 15201 ⑤ ⑥	17	14-1/8
Eaton 16244 ⑤ ⑥	22-1/2	18-3/8
Eaton 17201, 17221 ⑤ ⑦	31	26
Eaton 18201, 18221 ⑤ ⑥	33-1/2	27-1/2
Eaton 19221 ⑤ ⑥	36	29-1/2
Rockwell Q346A ⑦	34	28-1/2
Rockwell RT-341-A ⑥	34	28-1/2

④ 4-Wheel Drive
⑤ Add one pint of lubricant to front filler in carrier assembly when new or reconditioned drive unit is installed. This quantity is included in the capacities shown.
⑥ If hubs have been removed an additional 1/2 pint of axle lubricant must be added Add lubricant through the axle vent.
⑦ If hubs have been removed an additional 1 pint of axle lubricant must be added. Add lubricant through the axle vent.
⑧ If hubs have been removed an additional 1-1/2 pints of axle lubricant must be added. Add lubricant through the axle vent.
⑨ Fill to bottom of Filler hole.

All locking front axles add 2 oz. Friction Modifier EST-M2C118-A.
All locking rear axles add 4 oz. Friction Modifier EST-M2C118-A.

TANDEM AXLES REAR AND FRONT DRIVING AXLE LUBRICANT CAPACITIES

Make and Model		Approximate Capacity (Pints) ① U.S. Measure	Imperial Measure
Eaton 30DSC ② 30DTC, 30DPC	Forward	28	23-3/8
	Rearward	27	22-1/2
	Power Divider	2	1-5/8
Eaton 34DSC 34DPC, 34DTC 34DSE, 34DTE 34DPE ③	Forward	32-1/2	27
	Rearward	32	26-3/4
	Power Divider	2	1-5/8
Eaton 38DSC 38DTC, 38DSE, 38DPE ④	Forward	34	28-1/4
	Rearward	31	26
	Power Divider	2	1-5/8

① Add two pints of lubricant to the inter-axle differential housing in addition to the specified amount when a new or reconditioned drive unit is installed.
② If hubs have been removed an additional 1/2 pint of axle lubricant must be added. Add lubricant through the axle vent.

Make and Model		Approximate Capacity (Pints) ① U.S. Measure	Imperial Measure
Eaton 42DPB, 42DPD ④	Forward	29	24
	Rearward	29	24
Rockwell SLHD ③	Forward	32-1/2	27
	Rearward	32	26-5/8
	Power Divider	2	1-5/8
Rockwell SHHD ④	Forward	32	26-3/4
	Rearward	28	23-3/8
	Power Divider	2	1-5/8
Rockwell SQHD ④	Forward	34	28-1/2
	Rearward	31	26
	Power Divider	2	1-5/8

③ If hubs have been removed an additional 1 pint of axle lubricant must be added. Add lubricant through the axle vent.
④ If hubs have been removed an additional 1-1/2 pints of axle lubricant must be added. Add lubricant through the axle vent.

CE2169-C

REAR AXLE IDENTIFICATION

Type	Code	Model
Ford Single Speed	02,03,04,05,08 09,10,11,12,17,18	
Ford Single Speed Locking Axle	A2,A3,A5 B8,B9,H1,H2,H3	
Dana Single Speed	31,33,35,36 24,25,37,38 22,23,27,28,36	– 60 70
Dana Single Speed Locking Axle	C1,C3,C5,C6 B4,C7,C8 D7	– 60 70
Rockwell Single Speed Single Reduction	30,32,34 41,42,44 62,64,66 H1,H2,H3,H4,H5,H6,H7,H8,H9 52,53,54,55	C-100 D-100 F-106 R-171 H-170
Eaton Single Speed Single Reduction	GG,AG,BG,HG,CG,DG,EG,FG AK,FK DK,GK,EK,BK,CK DQ,CQ EQ,FQ,GQ,HQ,IQ	19121 18101 18121 17101 17121
Eaton Two Speed Single Reduction	E1,E2,E3 F1,F2,F3 BB,CB,HB DB,FB,GB,EB BH,CH,DH EH,FH,GH,HH EP,GP,AP,HP,BP,CP,DP,EP	16244 15201 18201 18221 17201 17221 19221
Rockwell Tandem Single Speed Single Reduction	B1,B2,B3,B4,B5,B6,B7,B8,B9,B0,BA D1,D2,D3,D4,D5,D6,D7,D8,D0,DA W3,W4,W5	SLHD SQHD SHHD
Eaton Tandem Single Speed Single Reduction	AC,BC,CC,DC,EC,FC,GC,HC GF,HF,IF,KF LF,JF,BF,CF,DF,EF,FF F1,G1,A1,B1,H1,C1 D1,E1,J1,K1	30D SC 34D SE 34D SC 38D SC 38D SE
Eaton Tandem Single Speed Double Reduction	BN,CN,DN,EN,FN GN AR,BR,CR,DR,ER,FR GR AV,CV,DV BV AD,BD,CD,DD	34D PC 34D PE 38D PC 38D PE 42D PB 42D PD 30D PC
Eaton Tandem Two Speed Single Reduction	AW,BW,DW,KW,IW FW,GW,HW	34D TC 34D TE
Eaton Tandem Two Speed Double Reduction	CL,DL,EL,FL	30D TC
Eaton Tandem Three Speed Single Reduction	AZ,BZ JT	38D TC 34D TE
Eaton Tandem Three Speed Double Reduction	HT,AT,BT,IT	34D TC-3

CE 1971-C

PART 15-05 Integral Carrier Axle-Dana

Applies To Econoline E300, F-250-350 and P-Series 350-400

COMPONENT INDEX	Page	COMPONENT INDEX	Page
AXLE SHAFT		PINION	
End Play Check	05-03	Depth Adjustment	05-04
		Depth Gauge Assembly	05-05
		Disassembly and Overhaul	05-03
DESCRIPTION	05-01	Shim Pack (Thicknesses)	05-04
DIFFERENTIAL (Complete)		REAR AXLE	
Cleaning and Inspection	05-04	Removal and Installation	05-03
DIFFERENTIAL BEARINGS		RING GEAR	
Cleaning and Inspection	05-05	Backlash Adjustment	05-07
End Play Measurement	05-04	Cleaning and Inspection	05-05
Preload Adjustment	05-06	SPECIFICATIONS	05-09

DESCRIPTION

F-250-F-350, E-300, P-350-P-400 AXLES DANA

Four models of Dana rear axles are used in regular production or are available as options on the light trucks.

The regular Model 60 2-pinion full-floating rear axle is used on the F-250 4 x 2 and 4 x 4 trucks, with standard and limited-slip types available. The Model 60 is also used on the P-350, with or without limited-slip differential.

Model 60-3E is used on Econoline E-300.

The Model 70 4-pinion full-floating rear axle is used on the F-350. It is also used on the P-350 and P-400.

This model 70 is of two piece case design and is used for limited slip applications.

Another model 70 axle of 2 pinion design has a one piece case and is used for conventional applications. For this axle, follow model 60 service procedures.

For identification and application of the model 70 axles refer to Fig. 1.

The above axles are of the integral carrier-housing, hypoid gear type, in which the centerline of the drive pinion is mounted below the centerline of the ring gear (Fig. 2).

2-Pinion Design	4-Pinion Design	Ratio	Usage
D2TA-GZA	D0TA-CB	3.73	F-350
D2TA-HAA	D0TA-CD	4.10	F-350
D2TA-HCA	D0TA-BZ	4.56	F-350
D2TA-HDA	D0TA-BT	4.88	P350/P400

CE2395-A

FIG. 1 Axle Identification and Application

The integral pinion gear and shaft is supported by two opposed tapered roller bearings which are assembled in the forward side of the carrier housing. Pinion locating shims, installed between the rear bearing cup and the cup seat, control the drive pinion depth adjustment. The pinion bearing preload is controlled by shims located between the pinion front bearing and the shoulder on the drive pinion shaft.

The differential case assembly is supported by two opposed tapered roller (side) bearings and cups, which are retained in the housing by removable caps. Shims, installed between each differential side bearing and the shoulder on the case, perform three functions: they take up the differential case side clearance; they adjust the backlash between ring gear and pinion; and they establish differential side bearing preload.

A cover on the rear of the carrier housing provides access for inspection, removal and installation of the differential assembly and drive pinion. A metal tag, stamped with the gear ratio plus the number of teeth on the ring gear and pinion, is secured to the housing by one of the cover bolts.

Vehicles equipped with limited-slip differential assemblies will have the letters L-S stamped on the metal tag.

Models 60, 60-3E and 70 (Fig. 2) have full-floating axle shafts, meaning that loads are borne by the axle housing and the shafts can be removed without disturbing the wheel bearings, which are double tapered roller bearings.

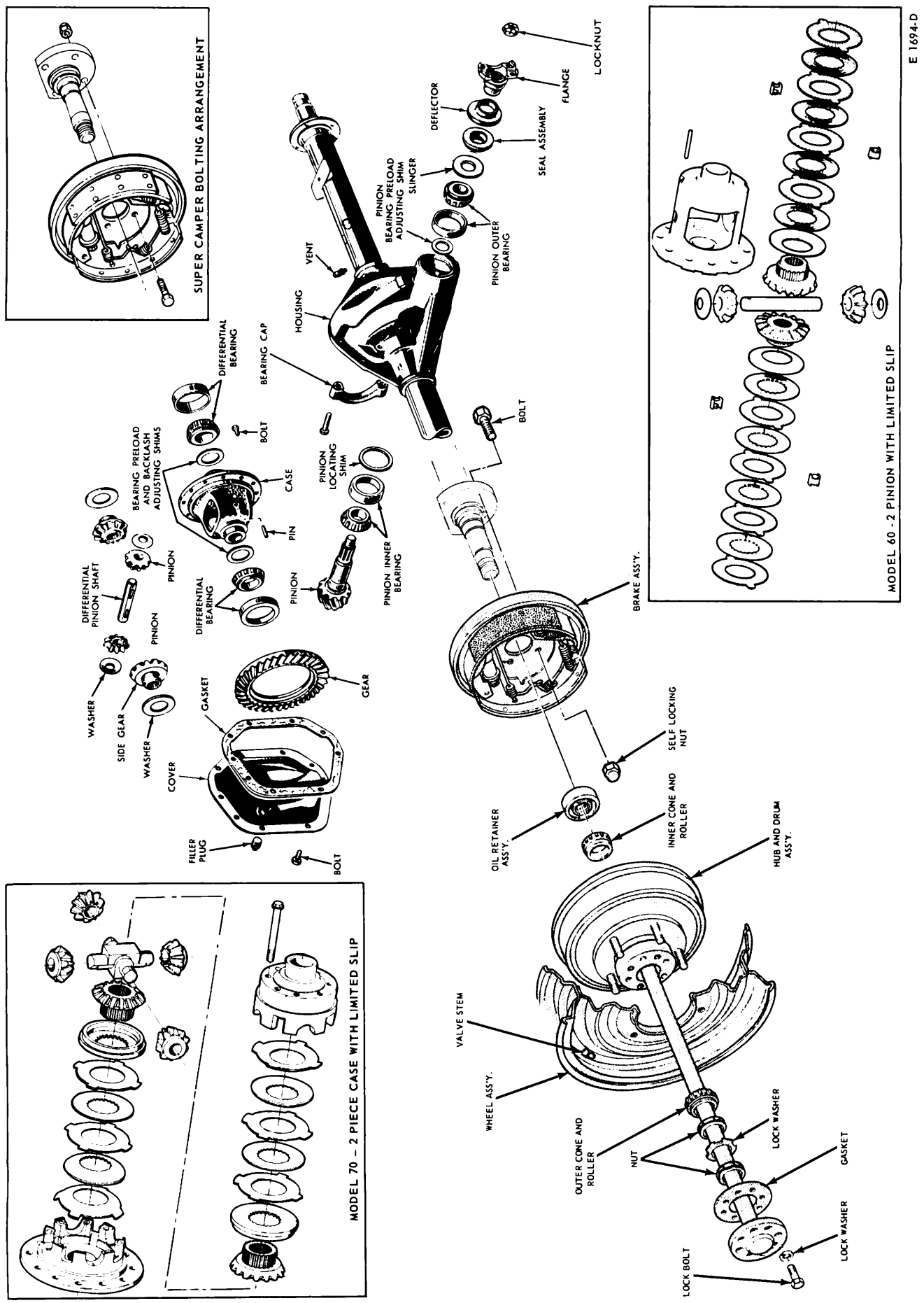

FIG. 2 Typical Model 60 and 70 Locking/Non-Locking Rear Axle—Dana

ADJUSTMENTS

Axle shafts, wheel hubs, wheel hub bearings, and the wheel hub grease seals can be replaced without removing the differential assembly from the axle housing or the rear axle assembly from the vehicle.

The axle shafts, wheel hub, bearing and grease seals may be replaced, lubricated, or adjusted as outlined in Part 11-14.

REMOVAL AND INSTALLATION

REAR AXLE

Removal

1. Loosen the wheel stud nuts and the axle shaft retaining bolts.
2. Disconnect the rear shock absorbers from the rear axle, and unclamp the rear stabilizer bar. Then raise the rear end of the vehicle frame until the weight is off the rear springs. Place safety stands under the frame in this position.
3. Disconnect the flexible hydraulic line at the frame and disconnect the axle vent hose at the axle connection.
4. Disconnect the parking brake cable (if so equipped) at the equalizer, and remove the cables from the cable support brackets.
5. Disconnect the drive shaft from the rear U-joint flange.
6. Remove the nuts from the spring clips (U-bolts), and remove the spring seat caps.
7. Roll the axle from under the vehicle, and drain the lubricant. Remove the wheels. Mount the axle in a work stand. To remove axle shafts, hubs and drums refer to Group 11, Part 14.

Installation

1. Apply a coating of ESA-M1C75-B lubricant to the lip surface; then, replace the hub inner grease seal. Refer to Group 11, Part 14 for hub and bearing installation; (use new axle shaft gaskets) then, install the axle shafts through the housing ends so that they will spline to the differential side gears. Install the shaft retaining bolts and lockwashers.
2. After installing rear wheels, roll the axle assembly under the vehicle.
3. Install the spring clips (U-bolts) and spring seat caps. Torque the nuts to 165-185 ft-lbs.
4. Connect the rear shock absorbers, and clamp the stabilizer bar in position.
5. Lower the vehicle to the floor. Connect the drive shaft to the rear universal joint flange.
6. Connect and adjust the parking brake cables (if so equipped).
7. Connect the hydraulic brake hose and bleed the brakes. Also connect the axle vent hose to the axle fitting.
8. Fill the axle with the proper grade and amount of lubricant.

DISASSEMBLY AND ASSEMBLY

PINION, DRIVE GEAR AND DIFFERENTIAL REPAIR

Except for the overhaul procedures on the differential case itself, the overhaul procedures given here apply to both the conventional, locking and limited-slip differential axles. Overhaul procedures for the limited-slip differential case assembly are given in Part 15-42.

Disassembly

1. Remove the rear axle from the vehicle as outlined in Removal and Installation.
2. Clean around the differential housing cover, and remove it. Discard the cover gasket. Remove the differential bearing caps.
3. Install the housing spreader Tool 4000-D, or Tool 4000-C (Fig. 3), making sure the tool hold-down clamp screws are tight if Tool 4000-C is used. Spread the housing until the differential assembly can be forced out with a small pry bar. **Do not spread the housing more than 0.020 inch to remove the differential assembly. Loosen the spreader thread immediately after lifting out the differential assembly to prevent springing the housing.**
4. If the differential bearings are to be removed use T53T-4221-C.

A shim pack will be found behind each differential bearing cone. These shim packs control differential bearing preload and pinion and ring gear backlash. When the differential bearing cones are removed, these shim packs are usually damaged by the puller jaws and should be replaced with new shims. Measure each shim pack, shim by shim, and write down the total thickness and location of each pack.

If the axle is equipped with a

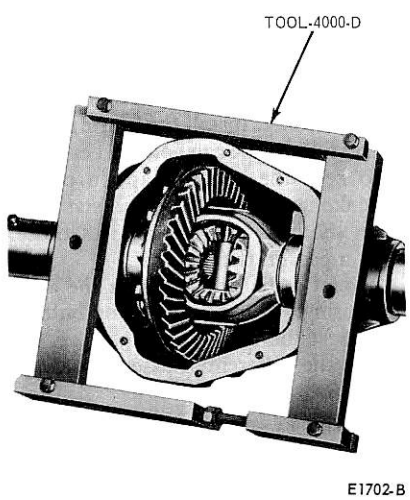

FIG. 3 Spreading Axle Housing

limited-slip differential, see part 15-42 for service procedures.

5. Remove the ring gear from the differential case. With a punch, drive out the differential pinion shaft locking pin. remove the differential pinion shaft (Fig. 4), differential pinions, and thrust washers. Remove the side gears and thrust washers. Rotate the side gears to permit the pinion gears to turn to the opening of the case.
6. If the pinion rear bearing cone is to be replaced, use the type of tool shown in Fig. 5.
7. Attach a slide hammer puller tool to the pinion outer bearing cone and remove the bearing cone, slinger, and oil seal from the housing.
8. Clean and inspect the axle parts as given in Part 15-01.

ASSEMBLY OF CONVENTIONAL DIFFERENTIAL

1. Lubricate; then install the side gears and thrust washers, pinions and thrust washers,and the pinion shaft in the differential case. To do this easily; assembly the side gears and thrust washers, hold them in place, then position the pinion gears to hold the side gears in place. Install the differential shaft locking pin. Peen metal of the case over the pin to lock it in place.
2. Install the ring gear on the differential case, and torque the attaching bolts to specification.

DIFFERENTIAL BEARING END PLAY MEASUREMENT

1. Press the differential bearings onto the case without shims (Fig. 6). The bearing must bottom on the case shoulder.
2. Place the cups on the differential bearings and install the assembly in the housing. Install the bearing caps and tighten the cap bolts just enough to keep the bearing caps in place. Make sure that the letters stamped on the caps are the same as those stamped on the carrier.
3. Mount a dial indicator on the axle housing, with the indicator button against the ring gear (Fig. 7).
4. Pry the differential assembly away from the dial indicator, using a screwdriver between the bearing cup and the case, and set the indicator at zero. Pry the differential assembly toward the indicator (Fig. 8) and note the indicator reading. This reading indicates the amount of shims needed behind the differential side bearings to take up the total clearance between the differential bearing cups and the case. Record this reading.
5. Remove the bearing caps and lift the differential assembly from the housing. **Do not install shims under the differential bearings at this time. The total-clearance reading obtained in the above step must be integrated with a second reading to be obtained after the pinion has been installed and pinion depth has been adjusted. The two readings are used to calculate the shim thickness necessary to obtain proper differential bearing pre-load and ring gear backlash, as well as end play adjustment.**

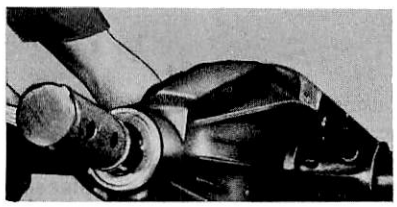

FIG. 4 Removing Pinion Shaft

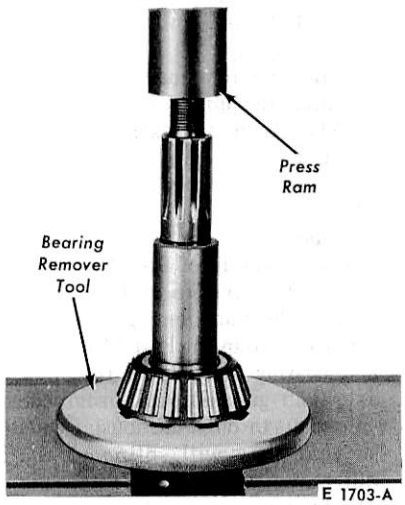

FIG. 5 Removing Pinion Bearing Cone

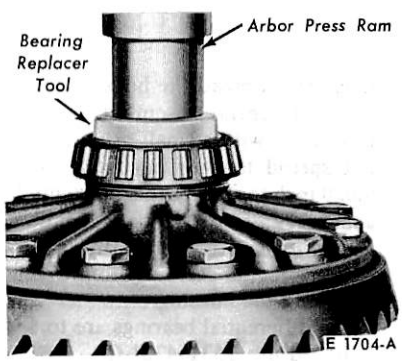

FIG. 6 Installing Differential Bearing

DRIVE PINION INSTALLATION AND DEPTH ADJUSTMENT

If the pinion bearing cups were removed, install them as shown in Fig. 9.

As in all other axles, two separate adjustments affect pinion and ring gear tooth contact. They are pinion depth (location) and backlash. On all other truck axles, the locating shim pack is installed between the pinion retainer and the carrier. On Dana axles, the pinion locating shim pack is installed between the pinion rear bearing cup, and the carrier housing (Fig. 10). Therefore, **adding** shims moves the pinion **toward** the ring gear; removing shims moves the pinion away from the ring gear.

Estimated Shim Pack

If the original gear set is being installed, install the pinion with the original shim pack and check the pinion location with a depth gauge.

If the ring gear and pinion is being replaced, note that the original factory installed (pinion locating) shim is of the correct thickness to adjust for individual variations in both the carrier housing dimension and in the original gear set

dimension. Therefore, to estimate the correct shim thickness for the new gear set to be installed, follow these steps:

1. Measure the thickness of the **original pinion locating shim** with a micrometer.
2. Note the shim adjustment number on both the old pinion and the new pinion. Each pinion gear is marked with an adjustment number such as the marking in Fig. 11, Part 15-01.

Refer to specifications for the correct amount of shim thickness change. The amount that is shown under the new pinion shim adjustment number and in line with the old pinion number is the amount of change that should be made to the **original** shim pack was made to the **original** shim thickness.

If the old pinion is marked 4, for example, and the new pinion is marked -2, the table indicates that 0.006 inch of shim stock should be added to the **original** shim pack.

If the **original** shim pack was not lost or if a new axle housing is being installed, substitute a **nominal** 0.030 inch shim for the **original,** and repeat the foregoing steps for a trial build-up.

If any further shim change is necessary, it will be indicated in the depth gauge check.

A new ring gear and pinion should always be installed in an axle as a matched set (never separately). **Be sure that the same matching number appears on both the drive pinion and the ring gear.** Note the number S55 in Fig. 11, Part 15-01.

Install the pinion with the estimated shim pack, and check the pinion location with a depth gauge as outlined in the following procedure.

Depth Gauge Check

1. Install the pinion locating shim pack and pinion bearing cups. Refer to Specifications for proper tool application.
2. Press the rear bearing onto the pinion shaft.
3. Position the pinion and rear bearing assembly by inserting it from the inner side of the axle housing. Position the front bearing cone (without preload shim pack) and the universal joint flange on the pinion shaft. Press all these parts into place under a press or with a flange replacer tool.
4. Install the pinion shaft flat washer and nut, and torque the nut until pinion bearing preload is between 20-40 in-lbs. As the nut is torqued, rotate the pinion shaft in both directions to seat the bearing rollers. If required, add or subtract shims to obtain 20-40 in-lbs. Torque the nut to specifications.

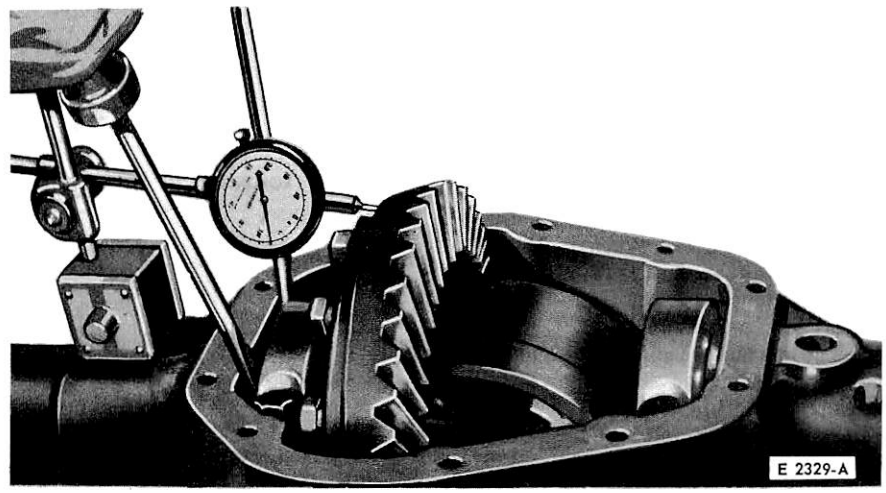

FIG. 7 Checking Differential End Play—First Step

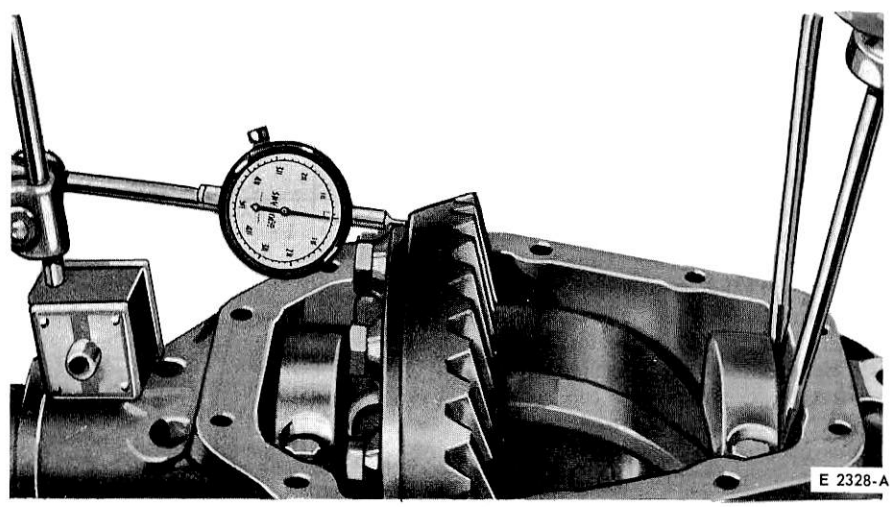

FIG. 8 Checking Differential End Play—Final Step

5. Check the pinion bearing preload (Fig. 11). Disregard the torque required to start the pinion rotating. The specified torque of 10 to 30 in-lbs refers to the torque required to keep the pinion rotating after it has been started.

After the pinion is installed in the housing and the bearing preload is within limits, check the depth setting (actual assembly dimension) with the gauge shown in Fig. 12.

Place the gauge shaft and discs in the differential bearing pockets and securely tighten the bearing caps.

6. Attach the dial indicator to its holder and place it on the higher step of the gauge block. Place the gauge block squarely on the pinion gear and squarely against the gauge shaft.

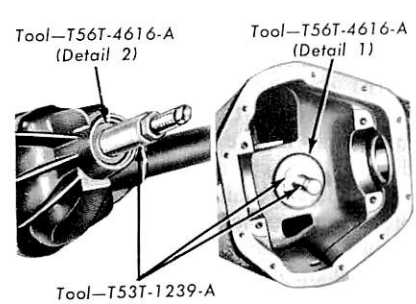

FIG. 9 Installing Pinion Bearing Cup—Models 60 and 70

7. With the indicator button resting on the proper step of the gauge block, set the dial face to read zero. Swing the indicator (Fig. 12) to the highest point on the gauge shaft and note the reading at the highest point. **The highest point on the gauge shaft is the point of highest indicator reading while the indicator hand is moving clockwise. When the hand reverses and starts moving counterclockwise, the highest point has been passed.**

The indicator reading at the highest point on the gauge shaft shows the actual assembly dimension with reference to the nominal assembly dimension. The nominal assembly 3.125 inches for Models 60 and 60-3E, and 3.500 inches for Model 70 axle. The nominal dimension is the distance from the ground surface on the pinion gear rear face to the centerline of the ring gear. The highest point on the installed gauge shaft is exactly 1/2 inch higher than the ring gear centerline. The installed gauge block step heights are exactly 1/2 inch greater than the nominal assembly dimensions for each axle.

When the gauge block is resting on a zero-marked pinion installed exactly at the nominal assembly dimension, the top of the gauge block and the highest point on the gauge shaft are exactly the same distance from the pinion gear rear face. In this case, the indicator, having been set at zero on the gauge block, will read zero when moved to the highest point on the gauge shaft. A plus or minus reading on the indicator at the highest point on the gauge shaft indicates, therefore, that the actual assembly dimension is not the same as the nominal assembly dimension. The plus and minus indicator readings are translated directly into plus and minus variations from the nominal assembly dimension.

The indicator reading at the highest point on the gauge shaft must correspond with the pinion gear marking, if the actual assembly dimension is correct. For example, a pinion marked minus 3 is installed at the proper depth when the indicator reads minus 3 at the highest point on the gauge shaft. Likewise, a pinion marked plus 3 is installed at the proper depth when the indicator reads plus 3 at the highest point on the gauge shaft.

A plus reading (clockwise from zero) at the highest point on the gauge shaft with a zero-marked pinion, means that the actual assembly dimension is too great in the amount of the plus reading. To correct, add shims in thousandths of an inch that correspond to the plus reading. For example, an indicator reading of plus 10 with a zero-marked pinion means that 0.010 inch in shims must be added to the rear bearing cup pack. The **addition** of shims will move the pinion gear closer to the ring gear and **decrease** the actual assembly dimension (Fig. 10).

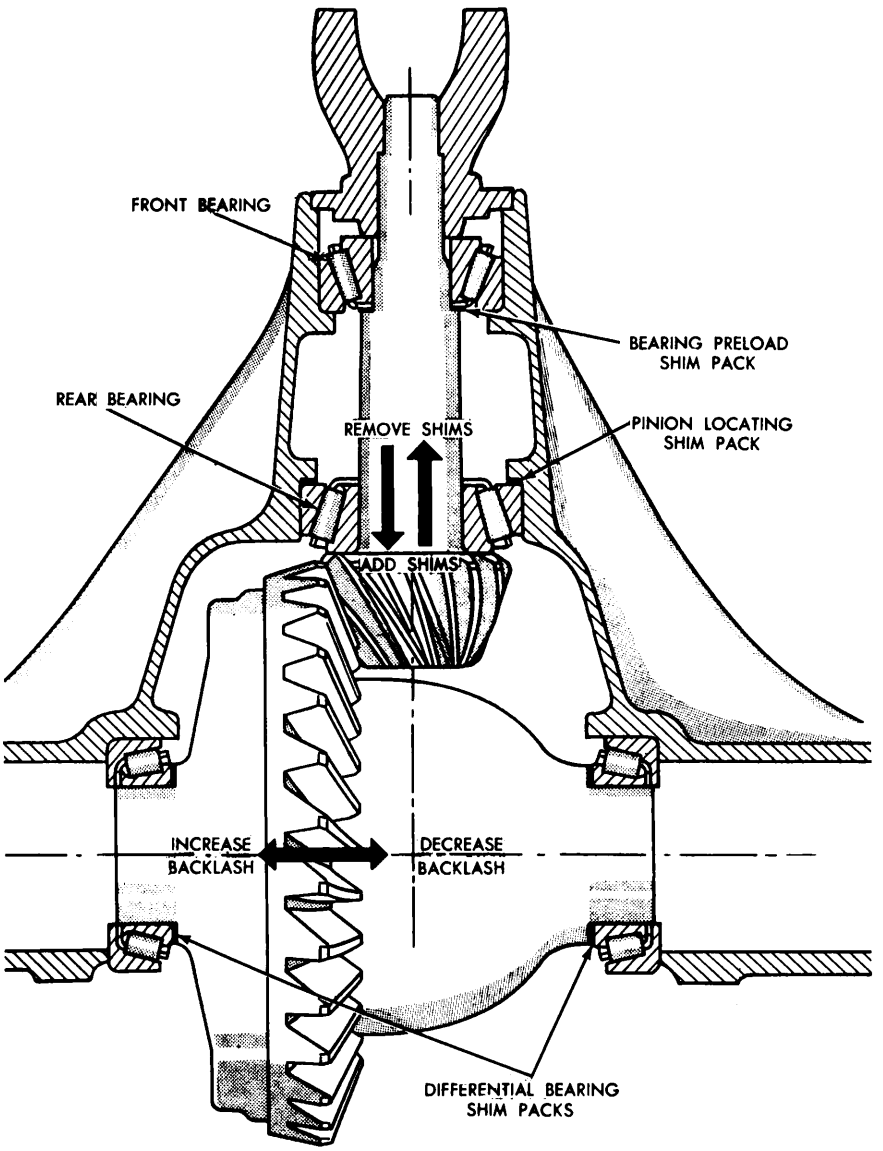

FIG. 10 Pinion and Ring Gear Tooth contact Adjustments

Likewise, a minus reading (counterclockwise from zero) at the highest point on the gauge shaft with a zero-marked pinion, means that the actual assembly dimension is deficient in the amount of the minus reading. To correct, remove shims in thousandths on an inch equal to the minus reading. This will increase the actual assembly dimension.

Whenever the pinion rear bearing cup shim pack is changed, install the pinion and recheck the pinion depth.

8. After the pinion depth has been adjusted and checked, remove the universal joint flange and front bearing. Add or subtract from the original front pinion bearing preload shim pack, the same amount in thousandths of an inch that was added or subtracted from the shim pack behind the rear bearing cup (Fig. 10). Install the bearing preload shim pack, the outer bearing, the universal joint flange, washer and nut. Torque the flange nut to 250-270 ft-lbs on all models.
9. Check the pinion bearing preload (Fig. 11). The preload should be 20-40 in-lbs. Add shims to decrease preload and remove shims to increase preload.

If the original bearing preload shim pack has been lost, or there is reason to believe that it was not correct, install a 0.065 inch shim pack for a trial build-up. Check the pinion bearing preload and adjust as necessary to obtain 20-40 in-lbs preload.

10. When the pinion bearing preload is correct, remove the universal joint flange. Install the oil slinger on the outer side of the front pinion bearing and install the grease seal. Refer to Specifications for the proper seal installer tool.

DIFFERENTIAL BEARING PRELOAD AND RING GEAR BACKLASH ADJUSTMENT

1. Refer to the reading taken in step 4 under Differential Bearing End Play Measurement. This reading (taken before the pinion was installed) represents the total clearance between the differential side bearing cups and the case.
2. Again install the differential assembly in the housing (this time with the pinion installed), and tighten the bearing caps lightly. Install the dial indicator with the button against the back face of the ring gear. Move the differential and ring gear assembly tight against the pinion gear, and then set the dial indicator to zero. Move the differential and drive gear assembly toward the indicator, and note the reading.
3. This reading indicates the amount of shims necessary to take up the clearance between the bearing cup and the case at the **ring gear side of** the differential assembly. Subtract this reading from the previously recorded total reading to obtain the amount of shims necessary to take up the clearance between the bearing cup and the case at the **pinion side** of the differential. Increase this pinion-side shim pack by an additional 0.015 to 0.020 inch in order to provide correct bearing preload and backlash. EXAMPLE (Fig. 13): Total clearance previously recorded....0.070 inch Less reading in foregoing step 2 (Amount of shims necessary to take up clearance at ring gear side)....0.038 inch Shims necessary to tatake up clearance at pinion side-0.032 inch Plus 0.015 inch shims for preload and backlash....0.015 inch Total amount of shims at pinion side....0.047 inch.
4. Remove the bearing caps, and lift the differential assembly from the housing. Remove the differential side bearings, and install the proper amount of shims on each side of the differential case. Press the side bearings onto the case until they are firmly seated against the shims.
5. Install the housing spreader, spread the housing not more than 0.020 inch, and install the differential assembly. Install the bearing caps, and remove the spreader. Install and torque the cap bolts to specification.
6. Install a dial indicator to check the backlash at four equally spaced points around the ring gear. The backlash must be held to 0.004-0.009 inch and cannot vary more than 0.002 inch between positions checked. If the backlash does not fall within these specifications, change the shim packs behind both differential side bearings, as required.
7. Check gear tooth contact pattern as given in Part 15-01.
8. Position a new gasket on the rear face of the axle housing, and install the rear cover and ratio identification tag. Torque the cap screws to 30-40 ft-lbs.
9. Place new gaskets on the axle shafts, and install the axle shafts. Install the retaining bolts and lockwashers. Torque the bolts to 60-70 ft-lbs.
10. Install he rear axle on the vehicle as outlined in Adjustments under Rear Axle Installation.

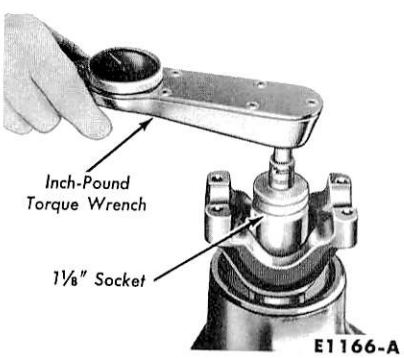

FIG. 11 Checking Pinion Bearing Preload

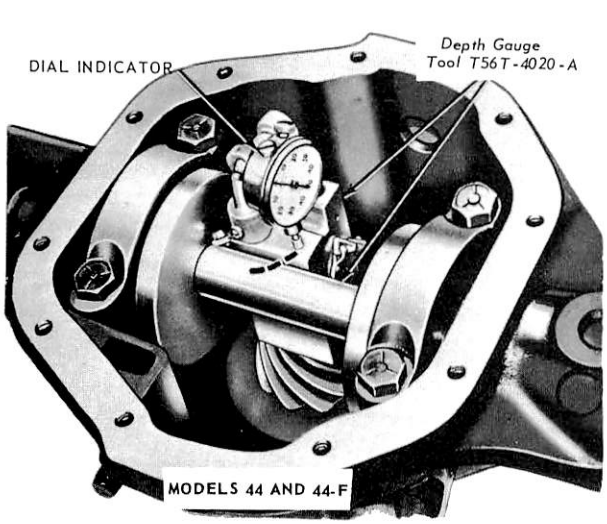

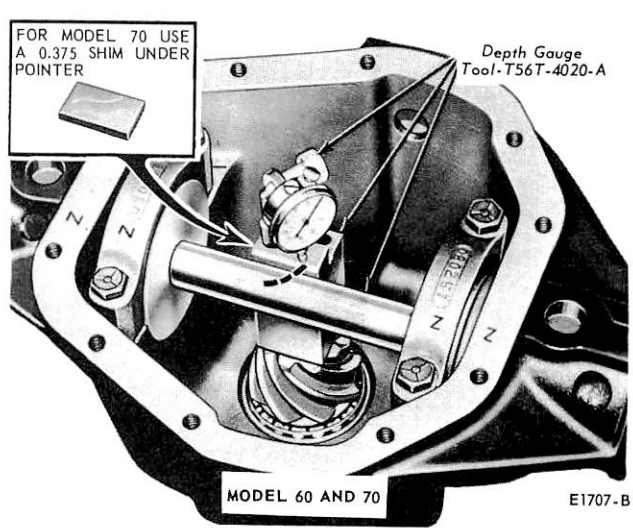

FIG. 12 Pinion Depth Gauge

SPECIFICATIONS

DRIVE PINION ADJUSTING SHIM THICKNESS CHANGES–DANA									
Old Pinion Marking	New Pinion Marking								
	-4	-3	-2	-1	0	+1	+2	+3	+4
+4	+0.008	+0.007	+0.006	+0.005	+0.004	+0.003	+0.002	+0.001	0
+3	+0.007	+0.006	+0.005	+0.004	+0.003	+0.002	+0.001	0	-0.001
+2	+0.006	+0.005	+0.004	+0.003	+0.002	+0.001	0	-0.001	-0.002
+1	+0.005	+0.004	+0.003	+0.002	+0.001	0	-0.001	-0.002	-0.003
0	+0.004	+0.003	+0.002	+0.001	0	-0.001	-0.002	-0.003	-0.004
-1	+0.003	+0.002	+0.001	0	-0.001	-0.002	-0.003	-0.004	-0.005
-2	+0.002	+0.001	0	-0.001	-0.002	-0.003	-0.004	-0.005	-0.006
-3	+0.001	0	-0.001	-0.002	-0.003	-0.004	-0.005	-0.006	-0.007
-4	0	-0.001	-0.002	-0.003	-0.004	-0.005	-0.006	-0.007	-0.008

DANA AXLE ADJUSTMENTS						
Description	Axle Model		Description	Axle Model		
	60 & 60-3E	70		60 & 60-3E	70	
	Inch			Inch		
Backlash Between Ring Gear and Pinion	0.004-0.009	0.004-0.009	Pinion Bearing Preload	20-40 in-lbs	20-40 in-lbs	
Backlash Maximum Variation Between Teeth	0.003	0.003				

DANA AXLE TORQUE LIMITS–(FT.LBS)					
	Axle Model			Axle Model	
Description	60	70	Description	60	70
Pinion Shaft Nut	250-270	250-270	Oil Filler Plug	25-50	25-50
Differential Bearing Cap Bolts	80-90	80-90	U-Joint Bolts	15-20	15-20
Ring Gear Attaching Bolts	110-115	110-115	Cover to Housing Bolts	30-40	30-40

CE2174-C

PART 15-10 Removable Carrier Axle—Ford

Applies to Bronco, Econoline E-100, E-200 and F-100

COMPONENT INDEX	Page	COMPONENT INDEX	Page
AXLE HOUSING		PINION AND PINION RETAINER	
Removal and Installation	10-06	Disassembly and Overhaul	10-07
AXLE SHAFTS		Removal and Installation	10-07
Removal and Installation	10-06	PINION OIL SEAL	
DIFFERENTIAL BEARINGS AND RING GEAR		Removal and Installation	10-04
Adjustments	10-12	PINION SPACER (COLLAPSIBLE)	
DIFFERENTIAL CASE		Checking Preload	10-05
Disassembly and Overhaul	10-07	Checking End Play	10-11
Removal and Installation	10-07	RING GEAR	
PILOT BEARING		Disassembly and Overhaul	10-07
Disassembly and Overhaul	10-08	SPECIFICATIONS	10-13
PINION BEARING CUPS		UNIVERSAL JOINT FLANGE	
Removal and Installation	10-08	Removal and Installation	10-05
		WHEEL BEARINGS AND SEALS	
		Removal and Installation	10-01

DESCRIPTION AND OPERATION

DESCRIPTION

The Ford conventional rear axle (Fig. 1 and Fig. 2) is used on the F-100, Bronco and Econoline (E-100 and E-200) Series. If a limited-slip differential is desired on a F-100 truck, a Traction-Lok (See Part 15-05) differential is available as optional equipment.

The rear axle is of the banjo housing, hypoid gear type, in which the centerline of the pinion is mounted below the centerline of the ring gear (Fig. 1).

The pinion gear and the pinion bearings are assembled in a pinion retainer which is bolted to the carrier. The pinion is straddle mounted; that is, it is supported by bearings both in front of and to the rear of the pinion gear. Two opposed tapered roller bearings support the pinion shaft in front of the pinion gear A straight roller (pilot) bearing supports the pinion shaft at the rear of the pinion gear. Pinion and ring gear tooth contact is adjusted by adding or removing shims from between the pinion retainer and the carrier housing.

The differential assembly is mounted on two opposed tapered roller bearings, which are retained in the carrier by removable caps. The entire carrier assembly is bolted to the axle housing.

Ball bearing assemblies (rear wheel bearings) are pressed onto the outer ends of the axle shafts and set in the outer ends of the axle housing. These bearings support the semi-floating axle shafts at the outer ends. The inner ends of the shafts spline to the differential side gears. Bearing retainer plates hold the shafts in the housing. The left and right axle shafts are not interchangeable, the left shaft being shorter than the right.

A metal tag stamped with the model designation and gear ratio is secured to all Ford-produced axles under one of the carrier-to-housing bolts (Fig. 3). It is important to use the model designation for obtaining the correct replacement parts.

REAR AXLE SHAFT, WHEEL BEARING AND OIL SEAL REMOVAL AND INSTALLATION

The rear axle shafts, wheel bearings, and oil seal can be replaced without removing the differential assembly from the axle housing.

Synthetic wheel bearing seals are used. Removal and insertion of rear axle shafts must be performed with caution. The entire length of the shaft (including spline) up to the seal journal must pass through the seal without cutting of the seal element during axle removal or installation will result in early seal failure. **Synthetic seals must not be cleaned, soaked, or washed in cleaning**

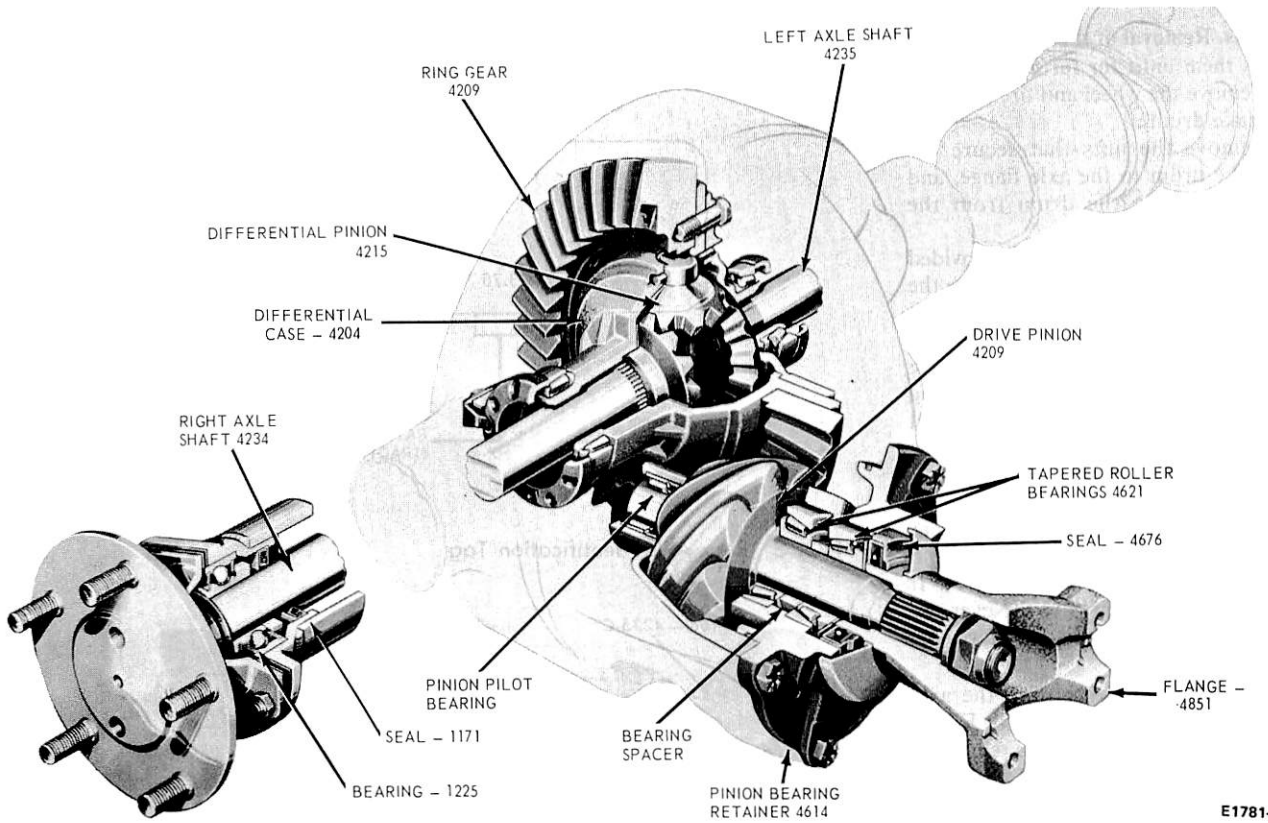

FIG. 1 Rear Axle—Ford

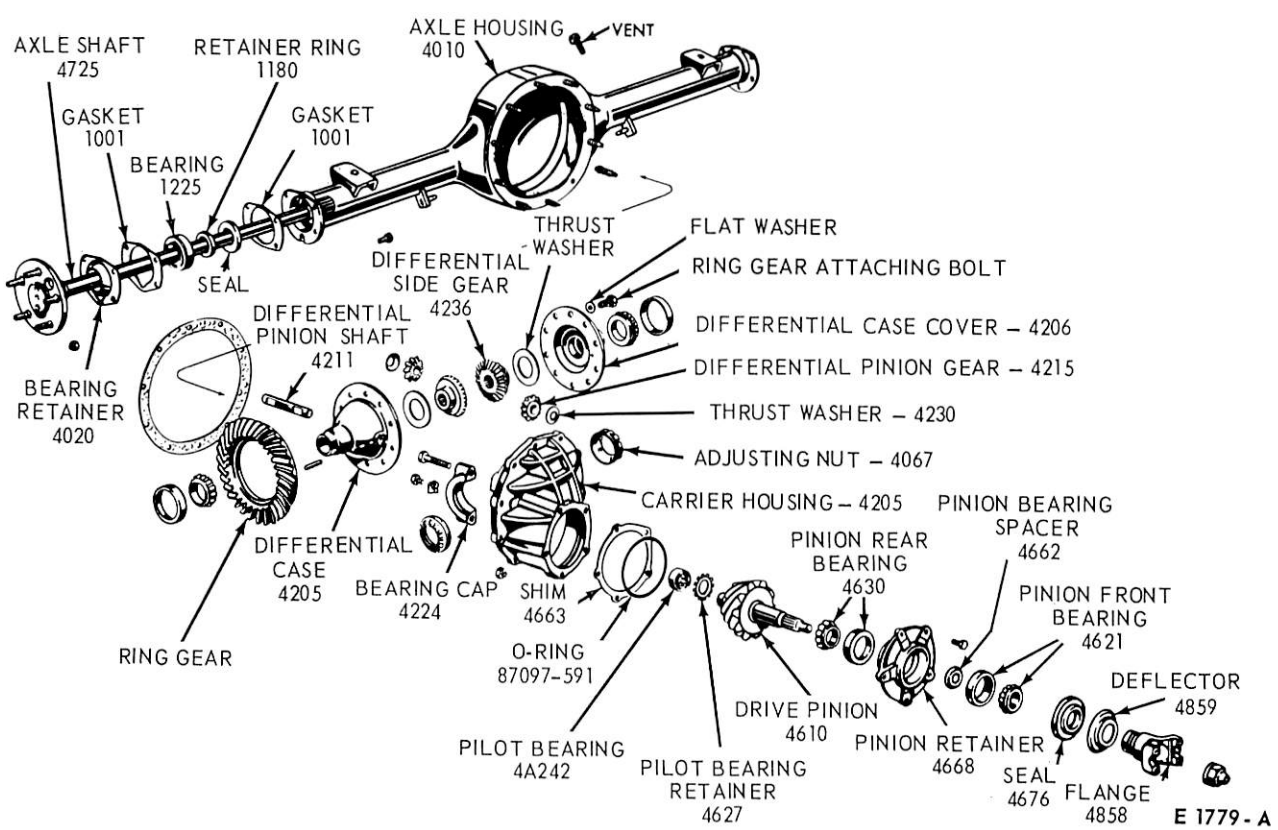

FIG. 2 Rear Axle—Ford—Disassembled

solvents. Removal of the wheel bearings makes them unfit for further use.

1. Remove the wheel and tire from the brake drum.
2. Remove the nuts that secure the brake drum to the axle flange, and then remove the drum from the flange.
3. Working through the hole provided in each axle shaft flange, remove the nuts that secure the wheel bearing retainer plate. Then pull the axle shaft assembly out of the axle housing (Fig. 4). **The brake backing plate must not be dislodged. Install one nut to hold the plate in place after the axle shaft is removed.**
4. If the rear wheel bearing is to be replaced, loosen the inner retainer ring by nicking it deeply with a cold chisel in several places (Fig. 5). It will then slide off easily. Never use heat to do this. To do so will weaken the parts.
5. Remove the bearing from the axle shaft with the tool shown in Fig. 7.
6. **Whenever a rear axle shaft is replaced, the oil seal must be replaced. Remove the seal with Tool 1175-AB and a slide hammer (Fig. 6).**
7. Inspect the machined surface of the axle shaft and the axle housing for rough spots or other irregularities which would affect the sealing action of the oil seal. Check the axle shaft splines for burrs, wear or damage. Carefully remove any burrs or rough spots. Replace worn or damaged parts.
8. Lightly coat wheel bearing bores with axle lubricant.
9. Place the retainer plate on the axle shaft, and press the new wheel bearing on the shaft with the tool shown in Fig. 7. **Do not attempt to press on both the bearing and the inner retainer ring at the same time.**
10. Using the bearing installation tool (Tool 1225-DA) press the bearing inner retainer ring on the shaft until the retainer seats firmly against the bearing. Never use heat to do this. To do so will weaken the parts.
11. Install the new oil seal with tools shown in Fig. 8. Wipe a small amount of oil-resistant sealer on the outer edge of the seal before it is installed. **Do not put sealer on the sealing lip.**
12. Place a new gasket between the housing flange and the backing plate, and then carefully slide the axle shaft into the housing so that the rough forging of the shaft will not damage the oil seal. Start the axle splines into the side gear, and push the shaft in until the bearing bottoms in the housing.
13. Install the bearing retainer plate and the nuts that secure it. Torque the nuts to specifications.
14. Install the brake drum and the drum attaching (tinnerman) nuts.
15. Install the wheel and tire on the drum.

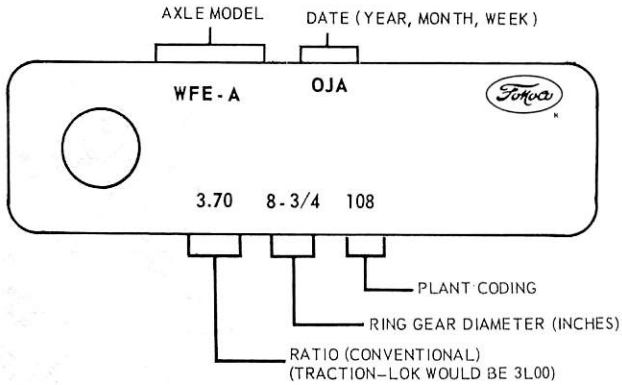

FIG. 3 Rear Axle Identification Tag

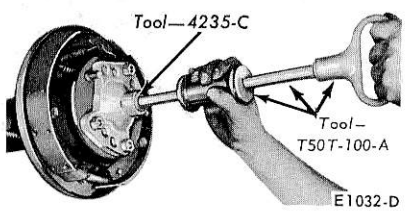

FIG. 4 Removing Axle Shaft

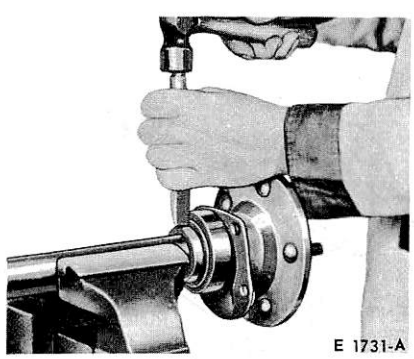

FIG. 5 Removing Rear Wheel Bearing Retainer Ring

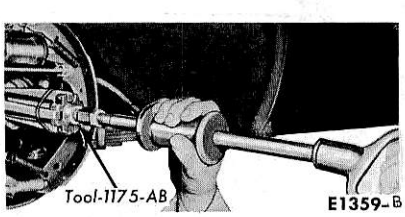

FIG. 6 Removing Rear Wheel Bearing Oil Seal

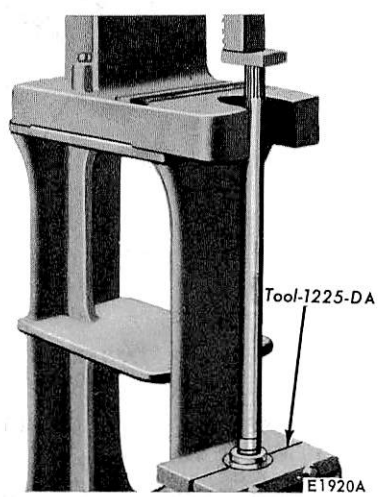

FIG. 7 Removing Rear Wheel Bearing

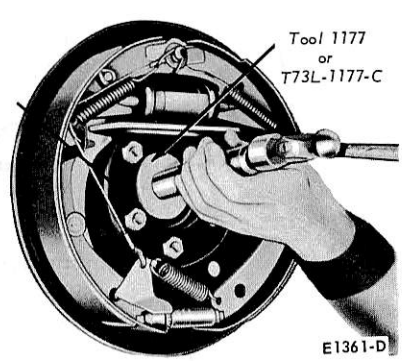

FIG. 8 Installing Rear Wheel Bearing Oil Seal

DRIVE PINION OIL SEAL REMOVAL AND INSTALLATION

COLLAPSIBLE SPACER

Synthetic seals must not be cleaned, soaked or washed in cleaning solvent.

The drive pinion oil seal can be replaced without removing the differential carrier assembly from the axle housing.

1. Raise the vehicle and install safety stands. Remove both rear wheels and brake drums.
2. Make scribe marks on the drive shaft end yoke and the axle U-joint flange to insure proper position of the drive shaft at assembly (Fig. 9). Disconnect the drive shaft from the axle U-joint flange. **Be careful to avoid dropping the loose universal joint bearing cup.** Hold the cups on the spider with tape. Mark the cups so that they will be in their original position in relation to the flange when they are assembled. Remove the drive shaft from the transmission extension housing. Install an oil seal replace tool in the transmission extension housing to prevent transmission fluid leakage. Refer to the transmission Group for the appropriate tool.
3. Install an in-lb torque wrench on the pinion nut. Record the torque required to maintain rotation of the pinion shaft through several revolutions.
4. Scribe the pinion shaft and the U-joint flange inner surface for assembly realignment. While holding the flange with the tool shown in Fig. 10 remove the integral pinion nut and washer.

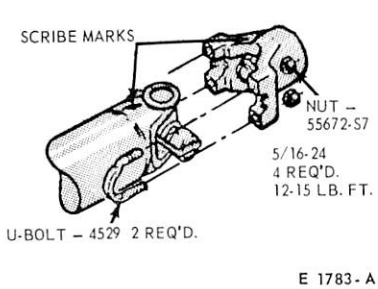

FIG. 9 Drive Shaft-to-U-Joint Connections

5. Clean the pinion bearing retainer around the oil seal. Place a drain pan under the seal, or raise the front of the vehicle higher than the rear.
6. Using the tool shown in Fig. 11, remove the U-joint flange.
7. Using the tool shown in Fig. 12, remove the drive pinion oil seal.
8. Clean the oil seal seat.
9. Coat the outer edge of the new seal with a small amount of oil resistant sealer. **Do not put any of the sealer on the sealing lip.** Install the seal in the retainer, using the applicable tool shown in Fig. 13.
10. Check splines on the pinion shaft to be sure they are free of burrs. If burrs are evident, remove them by using a fine crocus cloth, working in a rotational motion, then wipe clean. Apply a small amount of lubricant to U-joint splines.
11. Install the U-joint flange using the tool shown in Fig. 14.
12. Install a new integral nut and washer on the pinion shaft. (Apply a small amount of lubricant on the washer side of the nut).
13. Hold the flange with the tool shown in Fig. 10 while the nut is being tightened.
14. Tighten the pinion shaft nut, rotating the pinion occasionally to insure proper bearing seating, and take frequent preload readings until the preload is at the original recorded reading established in Step 3.

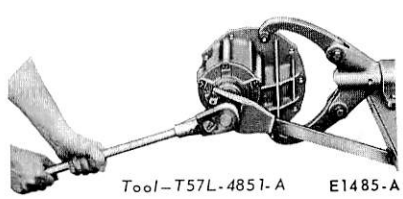

FIG. 10 Removing Pinion Shaft Nut

15. After original preload has been reached, tighten the pinion nut slowly, until an additional preload of 8 to 14 in-lb over the original reading is reached. (The preload should not exceed 8 to 14 in-lb over the original reading, or bearing failure may result).

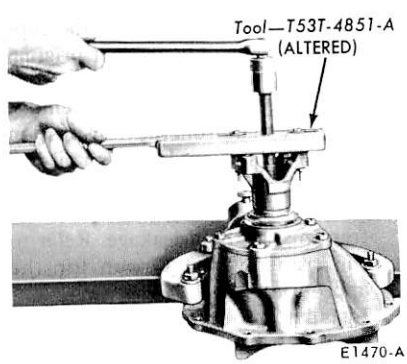

FIG. 11 Removing U-Joint Flange

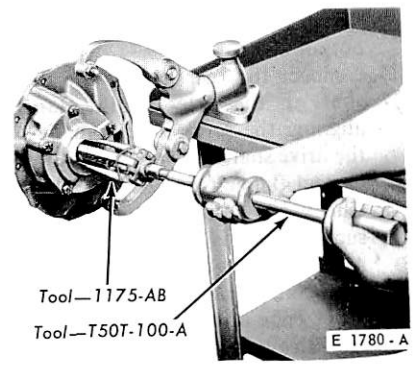

FIG. 12 Removing Pinion Seal

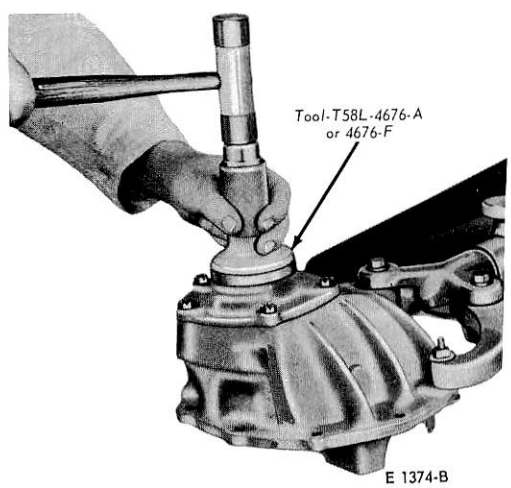

FIG. 13 Installing Pinion Seal

Under no circumstances should the pinion nut be backed off to lessen preload. If this is done, a new pinion bearing spacer must be installed. In addition, the U-joint flange must never be hammered on, or power tools used.

16. Remove the oil seal replacer tool from the transmission extension housing. Install the front end of the

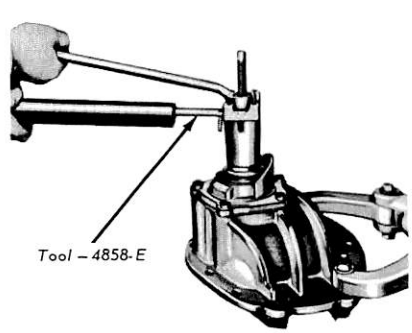

FIG. 14 Installing U-Joint Flange

drive shaft on the transmission output shaft.

17. Connect the rear end of the drive shaft to the axle U-joint flange, aligning the scribe marks made on the drive shaft end yoke and the axle U-joint flange (Fig. 9).
18. Check the lubricant level. **Make sure the axle is in running position. Add whatever amount of specified lubricant is required to reach the lower edge of the filler plug hole if the filler hole is in the cover.**

If the filler hole is in the carrier casting, the lubricant level should be at the bottom of the filler hole.

19. Install the brake drum and the drum attaching nuts.
20. Install the wheels and tires on the drums.

SOLID SPACER

The drive pinion oil seal can be replaced without removing the differential carrier assembly from the axle housing.

1. Make scribe marks on the drive shaft end yoke and the axle U-joint flange to insure proper position of the drive shaft at assembly (Fig. 9). Disconnect the drive shaft from the axle U-joint flange. **Be careful to avoid dropping the loose universal joint bearing cups.** Hold the cups on the spider with tape. Mark the cups so that they will be in their original position in relation to the flange when they are assembled. Remove the drive shaft from the transmission extension housing. Install an oil seal replacer tool in the transmission extension housing to prevent transmission leakage. Refer to the transmission Group for the appropriate tool.
2. Make punch marks on the end of the pinion shaft and the U-joint flange inner surface for realignment. While holding the flange with the tool shown in Fig. 10 remove the integral pinion nut and washer.
3. Clean the pinion bearing retainer around the oil seal. Place a drain pan under the seal, or raise the front of the vehicle higher than the rear.
4. Using the tool shown in Fig. 11 remove the U-joint flange.
5. Using the tool shown in Fig. 12 remove the drive pinion oil seal.
6. Clean the oil seal seat.
7. Install the new seal in the retainer, using the applicable tool shown in Fig. 13.
8. Check splines on the pinion shaft to be sure they are free of burrs. If burrs are evident, remove them with a fine crocus cloth, working in a rotational motion, then wipe clean. Apply a small quantity of lubricant to U-Joint splines.
9. Install the U-joint flange using the tool shown in Fig. 14.
10. Install a new integral attaching nut and washer on the pinion shaft.
11. Tighten the pinion attaching nut, rotating the pinion several times to seat the bearing, then torque the pinion nut to 180-200 ft-lbs. Hold the flange with the tool shown in Fig. 10 while the nut is being tightened.
12. Remove the oil seal replacer tool from the transmission extension housing. Install the front end of the drive shaft on the transmission output shaft.
13. Connect the rear end of the drive shaft to the axle U-joint flange, aligning the scribe marks made on the drive shaft end yoke and the axle U-joint flange (Fig. 9).
14. Check the lubricant level, and add whatever amount of specified lubricant is necessary to reach the lower edge of the filler plug hole. Make sure the axle is in running position when the level is checked.

ORIGINAL U-JOINT FLANGE (IN VEHICLE REMOVAL AND INSTALLATION)

Use procedure as outlined under Drive Pinion Oil Seal Removal and Installation.

Synthetic seals must not be cleaned, soaked or washed in cleaning solvent.

INSTALLATION OF A NEW UNIVERSAL JOINT FLANGE (IN VEHICLE-COLLAPSIBLE SPACER)

1. Raise the vehicle and install safety stands. Remove both rear wheels and brake drums.
2. Disconnect the drive shaft from the axle U-joint flange. **Be careful to avoid dropping the loose universal joint bearing cups. Hold the cups on the spider with tape.** Mark the cups so that they will be in their original position in relation to the flange when they are assembled. Remove the drive shaft from the transmission extension housing. Install an oil seal replacer tool in the transmission extension housing to prevent transmission fluid leakage. Refer to the transmission Group for the appropriate tool.
3. Install a in-lb torque wrench on the pinion nut. Record the torque required to maintain rotation of the pinion shaft through several revolutions.
4. **While holding the flange with the tool shown in Fig. 10, remove the integral pinion nut and washer.**
5. Clean the pinion bearing retainer around the oil seal. Place a drain pan under the seal, or raise the front of the vehicle higher than the rear. **Synthetic seals must not be cleaned, soaked or washed in cleaning solvent.**
6. Using the tool shown in Fig. 11, remove the U-joint flange.
7. Check splines on the pinion shaft to be sure they are free of burrs. If burrs are evident, remove them by using a fine crocus cloth, working in a rotational motion, then wipe clean. Apply a small amount of lubricant to U-joint splines.
8. Install the U-joint flange using the tool shown in Fig. 14.
9. Install a new integral nut and washer on the pinion shaft. (Apply a small amount of lubricant on the washer side of the nut).
10. Hold the flange with the tool shown in Fig. 9 while the nut is being tightened.
11. Tighten the pinion shaft nut, rotating the pinion occasionally to insure proper bearing seating, and take frequent preload readings until the preload is at the original recorded reading established in Step 3.
12. After original preload has been reached, tighten the pinion nut slowly, until an additional preload of 8 to 14 in-lb over the original reading is reached. (The preload should not exceed 8 to 14 in-lb over the original reading, or bearing failure may result.)

Under no circumstances should the pinion nut be backed off to lessen preload. If this is done, a new pinion bearing spacer must be installed. In addition, the U-joint flange must never be hammered on, or power tools used.

13. Remove the oil seal replacer tool from the transmission extension housing. Install the front end of the drive shaft on the transmission output shaft.
14. Connect the rear end of the drive shaft to the axle U-joint flange, aligning the scribe marks made on the drive shaft end yoke and the axle U-joint flange (Fig. 9).
15. Check the lubricant level. **Make sure the axle is in running position. Add whatever amount of specified lubricant is required to reach the lower edge of the filler plug hole if the filler hole is in the cover.**

If the filler hole is in the carrier casting, the lubricant level should be at the bottom of the filler hole.

INSTALLATION OF A NEW UNIVERSAL JOINT FLANGE (IN VEHICLE-SOLID SPACER)

1. Disconnect the drive shaft from the axle U-joint flange. **Be careful to avoid dropping the loose universal joint bearing cups.** Hold the cups on the spider with tape. Mark the cups so that they will be in their original position in relation to the flange when they are assembled. Remove the drive shaft from the transmission extension housing. Install an oil seal replacer tool in the transmission extension housing to prevent transmission leakage. Refer to the transmission Group for the appropriate tool.
2. While holding the flange with the tool shown in Fig. 10, remove the integral pinion nut and washer.
3. Clean the pinion bearing retainer around the oil seal. Place a drain pan under the seal, or raise the front of the vehicle higher than the rear.
4. Using the tool shown in Fig. 11, remove the U-joint flange.
5. Check splines on the pinion shaft to be sure they are free of burrs. If burrs are evident, remove them by using a fine crocus cloth, working in a rotational motion, then wipe clean. Apply a small amount of lubricant to U-joint splines.
6. Install the U-joint flange using the tool shown in Fig. 14.
7. Install integral attaching nut and washer on the pinion shaft.
8. Tighten the pinion attaching nut, rotating the pinion several times to seat the bearing, then torque the pinion attaching nut to 180-220 ft-lbs. Hold the flange with the tool shown in Fig. 11 while the nut is being tightened.
9. Remove the oil seal replacer tool from the transmission extension housing. Install the front end of the drive shaft on the transmission output shaft.
10. Connect the rear end of the drive shaft to the axle U-joint flange.
11. Check the lubricant level, and add whatever amount of specified lubricant is necessary to reach the lower edge of the filler plug hole. Make sure the axle is in running position when the level is checked.

REMOVAL AND INSTALLATION

CARRIER ASSEMBLY

Removal

1. Raise the vehicle on a hoist and remove the two rear wheel and tire assemblies.
2. Remove the two brake drums (3 Tinnerman nuts at each drum) from the axle shaft flange studs. If difficulty is experienced in removing the drums, back off the brake shoes as explained in Part 12-02.
3. **Working through the hole provided in each axle shaft flange, remove the nuts that secure the rear wheel bearing retainer plate. Pull each axle shaft assembly out of the axle housingusing axle shaft remover, Tool 4235-C (Fig. 4). Care must be exercised to prevent damage to oil seal, if so equipped. Any roughing or cutting of the seal element during removal or installation can result in early seal failure.** Install a nut on one of the brake carrier plate attaching bolts to hold the plate to the axle housing after the shaft has been removed. **Whenever a rear axle shaft is replaced, the wheel bearing oil seals must be replaced. Remove the seals with Tool 1175AB.**
4. Make scribe marks on the drive shaft end yoke and the axle U-joint flange to insure proper position at assembly. Disconnect the drive shaft at the rear axle U-joint, remove the drive shaft from the transmission extension housing. Install oil seal replacer Tool T57P-7657-A in the housing to prevent transmission leakage.
5. Place a drain pan under the carrier and housing, remove the carrier attaching nuts, and drain the axle. Remove the carrier assembly from the axle housing.

Installation

1. Synthetic wheel bearing seals must not be cleaned, soaked or washed in cleaning solvent. Clean the axle housing and shafts using kerosene and swabs. To avoid contamination of the grease in the sealed ball bearings, do not allow any quantity of solvent directly on the wheel bearings. Clean the mating surfaces of the axle housing and carrier.
2. Position the differential carrier on the studs in the axle housing using a new gasket between carrier and housing. Install the carrier-to-housing attaching nuts, and torque to specifications.
3. Remove the oil seal replacer tool from the transmission extension housing. Position the drive shaft so that the front U-joint slip yoke splines to the transmission output shaft.
4. Connect the drive shaft to the axle U-joint flange, aligning the scribe marks made on the drive shaft end yoke and the axle U-joint flange during the removal procedure (Fig. 6). Install the U-bolts and nuts and torque to specifications.
5. Wipe a small amount of an oil-resistant sealer on the outer edge of each seal before it is installed. **Do not put any of the sealer on the sealing lip. Install the oil seals in the ends of the rear axle housing with tool shown in Fig. 8.**
6. Install the two axle shaft assemblies in the axle housing. Care must be exercised to prevent damage to the oil seals. The shorter shaft goes into the left side of the housing.

When installing an axle shaft, place a new gasket between the housing flange and the brake backing plate, and carefully slide the axle shaft into the housing so that the rough forging of the shaft will not damage the oil seal. Start the axle splines into the differential side gear, and push the shaft in until the bearing bottoms in the housing.

7. Install the bearing retainer plates on the attaching bolts on the axle housing flanges. Install the nuts on the bolts and torque to specifications.
8. Install the two rear brake drums and the drum attaching nuts.
9. Install the rear wheel and tire assemblies.
10. If the rear brake shoes were backed off, adjust the brakes as outlined in Part 12-01.
11. Fill the rear axle with specified lubricant.

AXLE HOUSING

Removal

1. Remove the carrier assembly from the axle housing as outlined in the foregoing procedure.
2. Position safety stands under the rear frame members, and support the axle housing with either a floor jack or hoist.
3. Disengage the brake line from the clips that retain the line to the axle housing.

4. Disconnect the vent tube from the rear axle housing.
5. Remove the brake backing plate assemblies from the axle housing, and support them with wire. Do not disconnect the brake line.
6. Disconnect each rear shock absorber from the mounting bracket stud on the axle housing.
7. Lower the rear axle slightly to reduce some of the spring tension. At each rear spring, remove the spring clip (U-bolt) nuts, spring clips, and spring seat caps.
8. Remove the rear axle housing from under the vehicle.

Installation

If the axle housing is new, install a new vent. The hose attaching portion must face toward the front of the vehicle.

1. Install new rear wheel bearing oil seals in the ends of the rear axle housing with tools shown in Fig. 8. If leather-type wheel bearing service seals are to be installed, soak the new rear wheel bearing oil seals in SAE 10 oil for 1/2 hour before installation.
2. Position the rear axle housing under the rear springs. Install the spring clips (U-bolts), spring seat caps, and nuts. **Torque the spring clip nuts evenly to specifications.**
3. If a new axle housing is being installed, remove the bolts that attach the carrier plate and bearing retainer from the old housing flanges. Position the bolts in the new housing flanges to hold the brake backing plates in position. Install the backing plates with new gaskets between the housing flange and the brake backing plate.
4. Connect the vent tube to the axle housing.
5. Position the brake line to the axle housing, and secure with the retaining clips.
6. Raise the rear axle housing and springs enough to allow connecting the rear shock absorbers to the mounting bracket studs on the axle housing.
7. Install the carrier assembly and the two axle shaft assemblies in the axle housing as outlined in this section.

DISASSEMBLY AND ASSEMBLY

DISASSEMBLY

After mounting the carrier in a holding fixture, perform the Inspection before Disassembly of Carrier as explained in Part 15-01, under Adjustments. Then disassemble the carrier as outlined in the following procedures. A disassembled view of the rear axle assembly is shown in Fig. 2.

REMOVAL AND DISASSEMBLY OF DIFFERENTIAL CASE

1. Mark one differential bearing cap and the mating bearing support with punch marks to help position the parts properly during assembly of the carrier. Also, mark one of the bearing adjusting nuts and the carrier with scribe marks for proper location during assembly.
2. Remove the adjusting nut locks, bearing caps, and adjusting nuts. Then lift the differential assembly out of the carrier.
3. Remove the differential bearings with the tool shown in Fig. 15.
4. Mark the differential case, cover, and ring gear for assembly in the original position.
5. Remove the bolts that attach the ring gear to the differential case. Press the gear from the case or tap it off with a soft-faced hammer.
6. With a drift drive out the differential pinion shaft lock pin (Fig. 16), and separate the 2-piece differential case.
7. Drive the pinion shaft out with a brass drift (Fig. 17).
8. Remove the gears and thrust washers (Fig. 38).

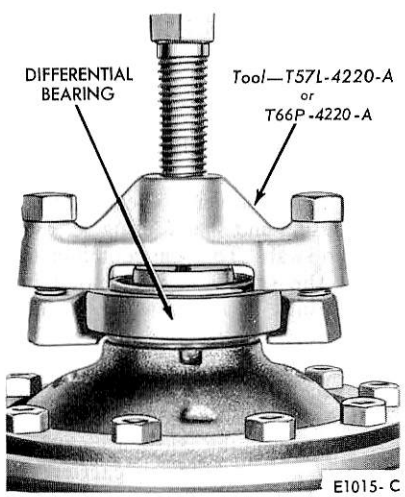

FIG. 15 Removing Differential Bearing

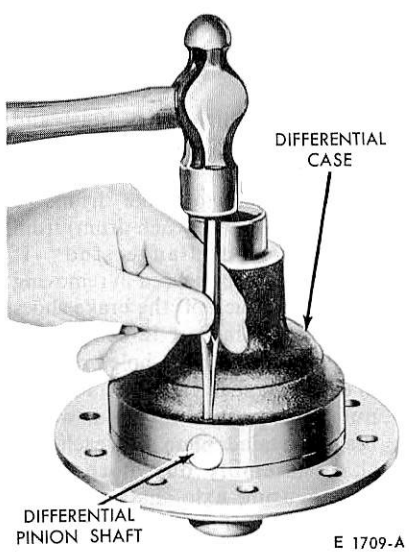

FIG. 16 Removing Differential Pinion Shaft Lock Pin

REMOVAL AND DISASSEMBLY OF DRIVE PINION AND BEARING RETAINER

1. Turn the carrier assembly upright and remove the pinion shaft nut (Fig. 10).
2. Remove the U-joint flange from the pinion shaft (Fig. 11).
3. Remove the pinion seal (Fig. 12).
4. Remove the pinion, bearing, and retainer assembly from the carrier housing (Fig. 30). Measure the shim thickness with a micrometer. Record this original shim thickness. If a new gear set is installed during assembly, a new shim will have to be installed. The original shim thickness is one of the factors necessary in determining the new shim thickness. **Extreme care must be taken not to damage the**

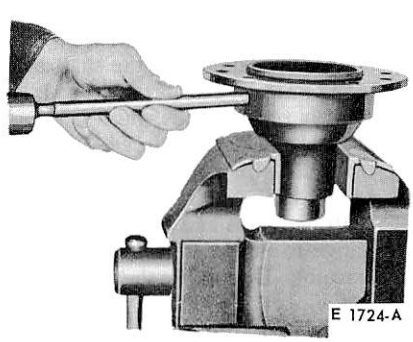

FIG. 17 Driving Out Differential Pinion Shaft

MOUNTING surfaces of the retainer and carrier.

5. Place a protective sleeve (hose) on the pinion pilot bearing surface. Press the pinion shaft out of the pinion front bearing cone (Fig. 18).
6. Press the pinion shaft out of the pinion rear bearing cone (Fig. 19).

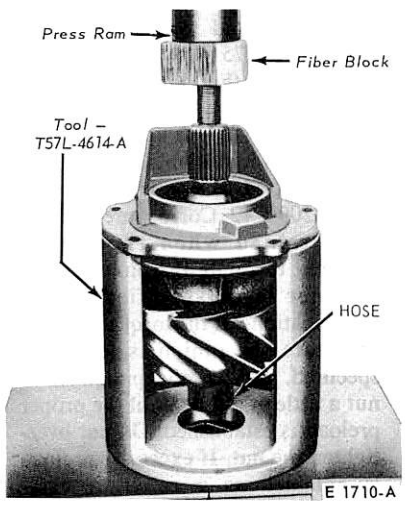

FIG. 18 Removing Pinion Front Bearing Cone

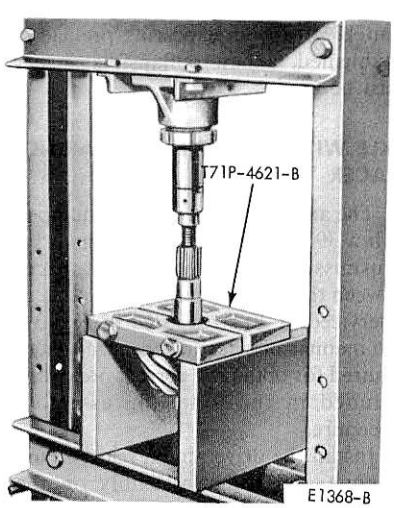

FIG. 19 Removing Pinion Rear Bearing Cone

PARTS REPAIR OR REMOVAL AND INSTALLATION

Clean and inspect all the parts as outlined in Part 15-01, under Adjustments. Before assembling the carrier, repair or remove and install all parts as indicated by the inspection.

The principal replacement operations are covered in the following procedures. All other repair or removal and installation operations are performed during Cleaning and Inspection Part 15-01, Adjustments, or during the Assembly of the Carrier in this Section.

PILOT BEARING

1. Remove the pilot bearing as shown in Fig. 20. Drive out the pilot bearing and the bearing retainer together.
2. Drive the new bearing in until it bottoms as shown in Fig. 21.
3. Using the same tool, install a new pilot bearing retainer with the concave side up.

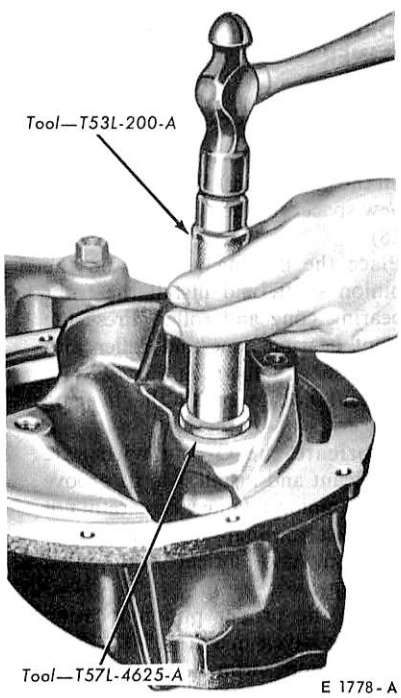

FIG. 20 Removing Pilot Bearing

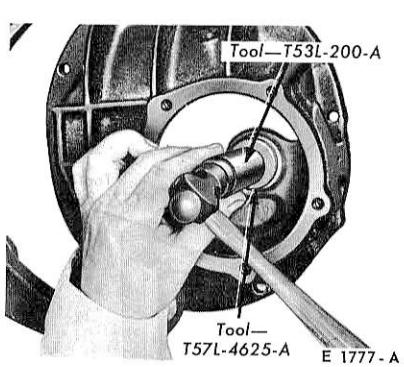

FIG. 21 Installing Pilot Bearing

PINION BEARING CUPS

Do not remove the pinion bearing cups from the retainer unless the cups are worn or damaged. The flange and pilot of the retainer are machined during manufacture by locating on these cups after they are installed in their bores. If the cups are worn or damaged, they should be replaced.

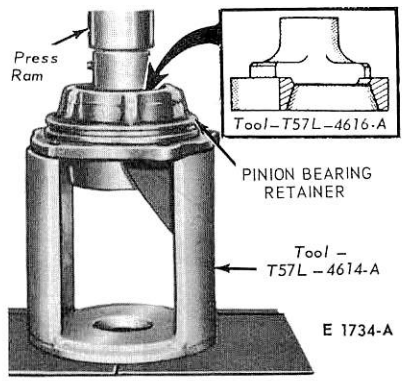

FIG. 22 Removing Pinion Front Bearing Cup

Remove the cups as shown in Figs. 22 and 23.

After the new cups are installed (Figs. 24 and 25), make sure they are seated in the retainer by trying to insert a 0.0015-inch feeler gauge between the cup and the bottom of the bore.

Whenever the cups are replaced, the cone and roller assemblies should also be replaced.

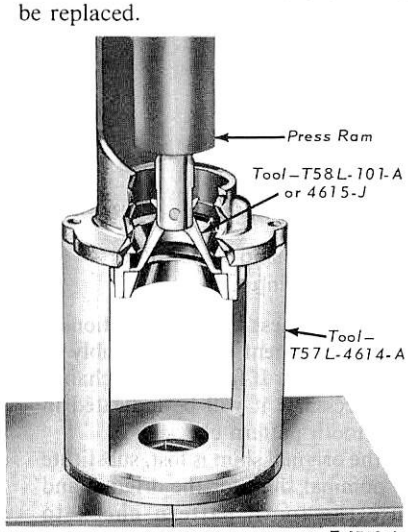

FIG. 23 Removing Pinion Rear Bearing Cup

ASSEMBLY

DRIVE PINION AND RING GEAR SET

When replacing a ring gear and pinion, note that the original factory installed shim is of the correct thickness to adjust for individual variations in both the carrier housing dimension and in the original gear set dimension. Therefore, to select the correct shim thickness for the new gear set to be installed, follow these steps:

1. Use a micrometer to measure the thickness of the original shim removed from the axle and use the

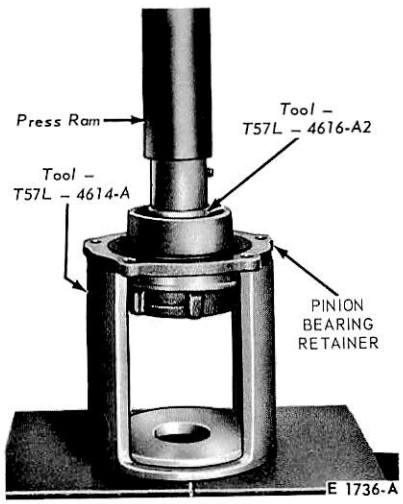

FIG. 24 Installing Pinion Front Bearing Cup

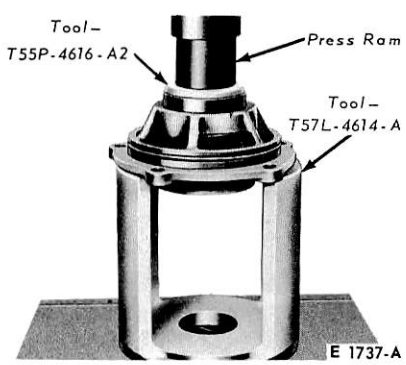

FIG. 25 Installing Pinion Rear Bearing Cup

same thickness upon installation of the replacement carrier assembly or drive pinion. If further shim change is necessary, it will be indicated in the tooth pattern check.

2. If the original shim is lost, substitute a nominal shim for the original and use the tooth pattern check to determine if further shim changes are required. Nominal shim thicknesses is indicated in Specifications.

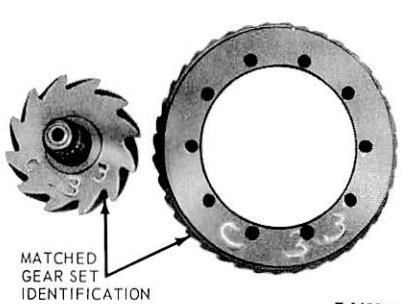

FIG. 26 Pinion and Ring Gear Markings

A new ring gear and pinion should always be installed in an axle as a matched set (never separately). **Be sure the same identifying (matching) number, painted in white, appears on the bolt hole face of the ring gear and on the head of the drive pinion (Fig. 26).**

3. After determining the correct shim thickness as explained in the foregoing steps, install the new pinion and ring gear as outlined under Assembly.

ASSEMBLY AND INSTALLATION OF DRIVE PINION AND BEARING RETAINER

COLLAPSIBLE SPACER

1. Install the pinion rear bearing cone on the pinion shaft (Fig. 27). Place a new spacer on the pinion shaft (Fig. 28).
2. Place the bearing retainer on the pinion shaft, and install the front bearing cone and roller. Press the front bearing cone and roller into position as shown in Fig. 29. Be careful not to crush the bearing spacer.
3. Lubricate the O-ring with axle lubricant and install it in its groove in the pinion retainer. Be careful not to twist it. Snap the O-ring into position. Also lubricate both pinion bearings.
4. Select the proper pinion locating shim as given in Part 15-01. Place the proper shim on the carrier housing and install the pinion and

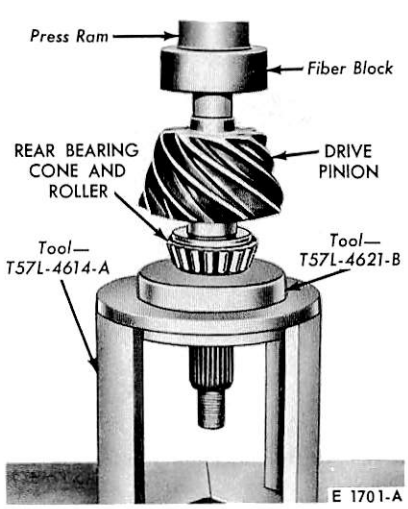

FIG. 27 Installing Pinion Rear Bearing Cone

retainer assembly, being careful not to pinch the O-ring (Fig. 30).

5. Install the pinion retainer attaching bolts. Torque the bolts to specification.
6. Install a new pinion oil seal in the bearing retainer (Fig. 13).
7. Install the U-joint flange (Figs. 14 and 28).
8. Start a new integral nut and washer on the pinion shaft. Apply a small amount of lubricant to the washer side of the nut.
9. Hold the flange with the tool shown in Fig. 10, and torque the pinion shaft nut to 175 ft-lbs. ***Do not exceed* 175 ft-lbs at this time.**
10. Check the pinion bearing preload as shown in Fig. 31. If an in-lb torque wrench is not available Tool 4209-C may be used in combination with Tool 4209-C12. Correct preload will be obtained when the torque required to rotate the pinion in the retainer is as specified in the Specifications. If the torque required to rotate the pinion is less than specified, tighten the pinion shaft nut a little at a time until the proper preload is established. **Do not overtighten the nut. If excessive preload is obtained as a result of overtightening, replace the collapsible bearing spacer.**

Do not back off the pinion shaft nut to establish pinion bearing preload. If the torque on the pinion shaft nut is less than 175 ft-lbs after bearing preload is established, a new collapsible spacer must be used.

AXLE WITH SOLID PINION BEARING SPACER

The axle, used on a vehicle equipped with a 390 CID engine and standard transmission, employs a solid spacer between the pinion bearings. The spacer is serviced in 20 sizes listed in Fig. 31. The manner of selecting the size spacer required for obtaining correct preload is included in the following assembly procedure.

1. Install the drive pinion rear bearing cone and roller assembly on the pinion shaft as shown in Fig. 32.
2. Select a new solid spacer of a larger size (0.485 inch thick), and slide it over the pinion shaft against the rear bearing.

The pinion bearing preload can be accurately measured only when the pinion shaft nut is torqued to 180-220 ft-lbs. If a spacer smaller than required were used, the specified 180-220 ft-lbs torque would damage the bearings. For this reason, the largest spacer should be tried first. Then, if the bearings are too loose, the size of the spacer can be decreased until the correct preload is obtained.

3. Position the bearing retainer and cup assembly on the pinion shaft and

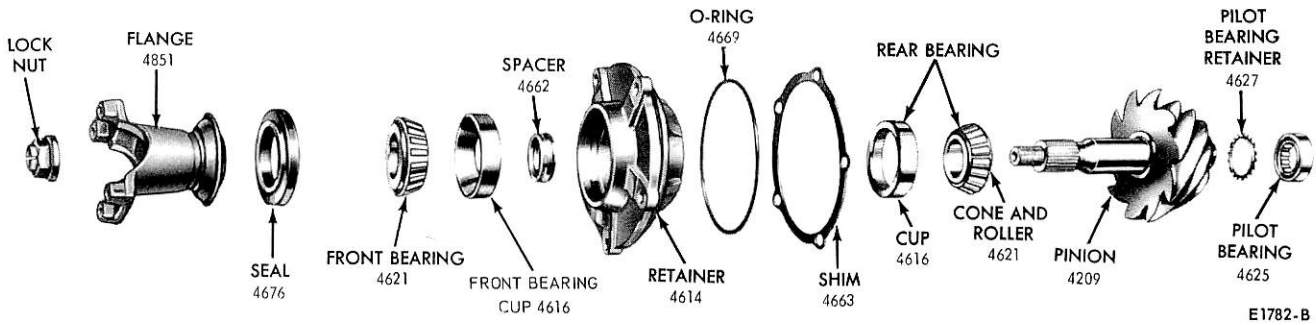

FIG. 28 Pinion and Bearing Retainer

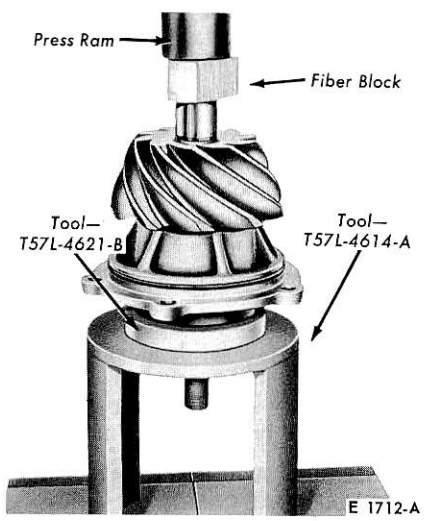

FIG. 29 Installing Pinion Front Bearing

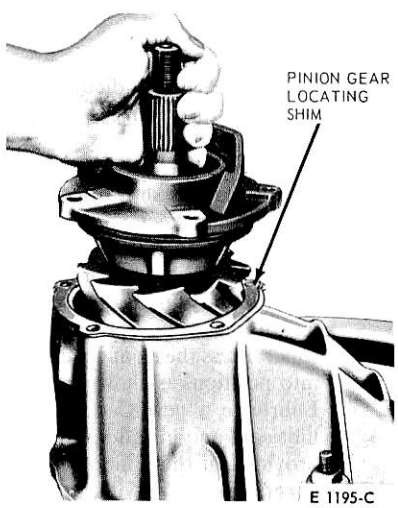

FIG. 30 Removing Or Installing Pinion and Retainer Assembly

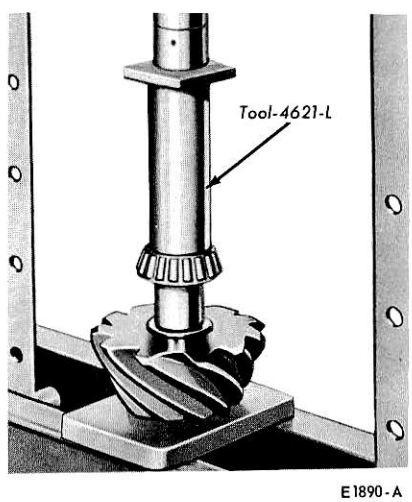

FIG. 32 Installing Pinion Rear Bearing Cone

install the front bearing cone and roller. Press the front cone and roller assembly into position, as shown in Fig. 29.

4. Mount the retainer in a holding fixture as shown in Fig. 33, and place the slinger over the pinion shaft and against the front bearing.
5. Install the U-joint flange with the tool shown in Fig. 14.
6. Hold the flange with the tool shown in Fig. 33, and install the old pinion shaft nut. Using a ft-lb torque wrench, torque the nut to 180-220 ft-lbs. While tightening the nut, rotate the bearing retainer to determine the existence of any bearing preload which will be indicated by a slight drag in the rotation of the retainer.

DETERMINING SPACER SIZE FROM PRELOAD READING

1. If bearing drag indicates a preload condition exists, apply an in-lb torque wrench to the pinion nut as shown in Fig. 34 and read the torque required to turn the shaft. Effort should be 12-1/2 to 32-1/2 in-lbs.
2. If preload is the correct value, proceed with assembly procedure given in Final Assembly of Pinion and Retainer, which follows.
3. If preload exists, but is below specification, select the correct spacer from Fig. 31 and install,

AS END PLAY READS (10/1000 inch) USE THIS SPACER	.0	1	2	3	4	5	6	7	8	9	10	11	12	13	14	15
	0.481	0.480	0.479	0 78	0.478	0.476	0.474	0.474	0.472	0.472	0.470	0.470	0.468	0.468	0.466	0.465
If there is no end play and preload on the bearings exists:																
IF PRELOAD READS (in-lbs.) USE THIS SPACER	2-11 0.482	12-20 0.483	21-30 0.484	31-45 0.485												

CE1950-A

FIG. 31 Solid Spacer Selection

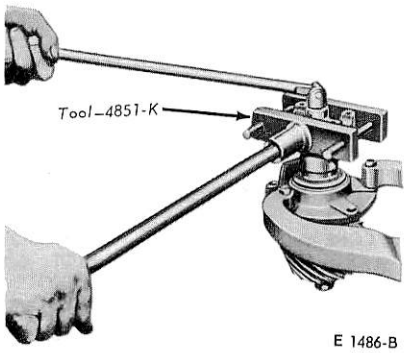

FIG. 33 U-Joint Flange Holding Tool

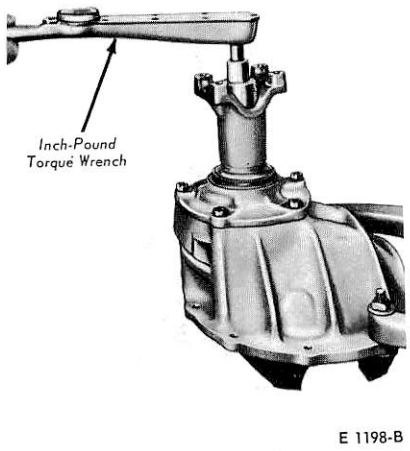

FIG. 34 Pinion Bearing Preload Check

completing assembly as shown in Final Assembly of Pinion and Retainer.

DETERMING SPACER SIZE FROM END PLAY READING

1. If no perceptible preload is felt when rotating the pinion shaft, install a dial indicator as shown in Fig. 35, so that the indicator point is resting on the end of the pinion gear shaft (companion flange end).
2. Use both hands to squeeze the pinion shaft and the bearing retainer together (Fig. 36). Record the end play reading shown on the dial indicator.
3. Disassemble the pinion shaft and retainer and install the correct spacer as shown in Fig. 31.
4. Proceed with assembly of the pinion shaft and retainer as directed in **Final Assembly of Pinion and Retainer.**

FINAL ASSEMBLY OF PINION AND RETAINER

1. Install the drive pinion rear bearing

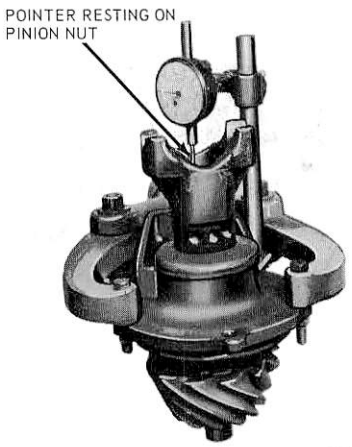

FIG. 35 End Play Indicator Installation

cone and roller assembly on the pinion shaft as shown in Fig. 32.
2. Slide the correct spacer over the pinion shaft against the rear bearing.
3. Position the bearing retainer and cup assembly on the pinion shaft and install the front bearing cone and roller. Press the front cone and roller into position, as shown in Fig. 14.
4. Lubricate a new O-ring with axle lubricant and install it in the groove provided in the pinion retainer. **Be careful not to twist the O-ring. Install it by snapping it into place.**
5. Place the proper shim on the carrier housing and install the pinion and retainer assembly, being careful not to pinch the O-ring (Fig. 30).
6. Install the pinion retainer bolts. Torque the bolts to specification.
7. Place the slinger over the pinion shaft and against the front bearing.
8. Install a seal in the bearing retainer, (Fig. 37).

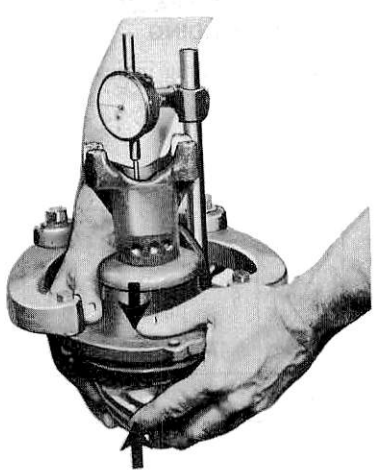

FIG. 36 Checking Pinion End Play

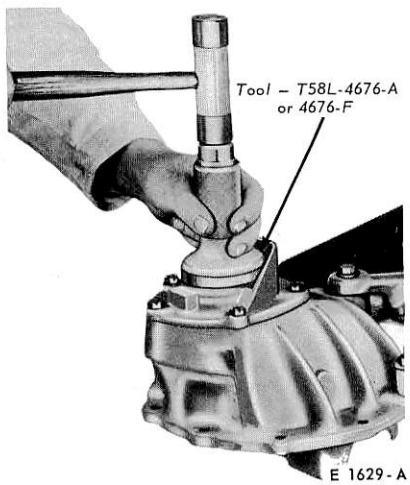

FIG. 37 Installing Oil Seal

9. Start a new integral nut and washer on the pinion shaft.
10. Hold the companion flange with the tool shown in Fig. 33 and torque the pinion nut to specifications (200 ft-lbs).
11. With a new seal installed, pinion bearing preload should now read 17 to 32 in-lbs for new pinion bearings and new seal, or 8 to 14 in-lbs for original bearings and a new seal.

ASSEMBLY AND INSTALLATION OF DIFFERENTIAL CASE

1. Place a side gear thrust washer in the differential case bore (Fig. 38). **Lubricate all differential parts liberally with axle lubricant during assembly.**
2. With a soft-faced hammer, drive the pinion shaft into the case only far enough to retain a pinion thrust washer and pinion gear.
3. Place the second pinion and thrust washer in position, and drive the pinion shaft into place. **Carefully line up the pinion shaft lock pin holes.**
4. Place the second side gear and thrust washer in position (Fig. 38), and install the cover on the differential case. Install the pinion shaft lock pin. A pinion or axle shaft spline can be inserted in the side gear spline to check for free rotation of the differential gears.
5. Insert tow 7/16 (N.F.) bolts two inches long through the differential case flange, and thread them three or four turns into the ring gear as a guide in aligning the ring gear bolt holes. Press or tap the ring gear into position.
6. Install and tighten the ring gear bolts evenly, and torque them alternately across the gear to

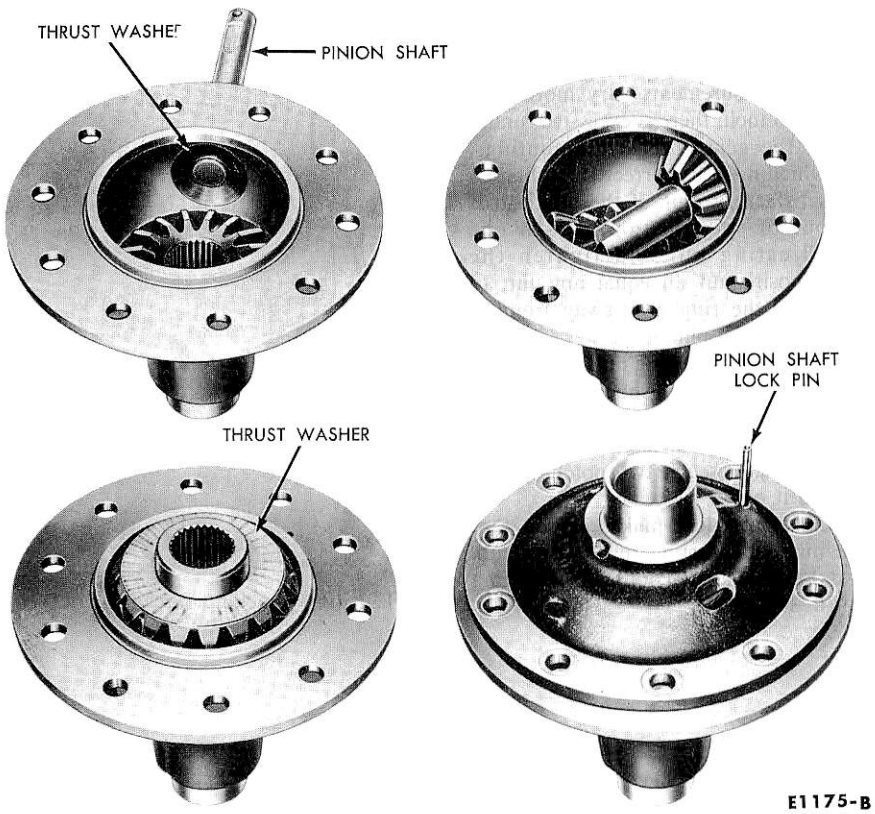

FIG. 38 Assembly of Differential Case

specification.

7. If the differential bearings have been removed, press them on as shown in Fig. 39.
8. Apply a thin coating of lubricant on the bearing bores in the carrier so that the differential bearing cups will move easily. Place the cups on the bearings and set the differential case assembly in the carrier.
9. Slide the assembly along the bores until a slight amount of backlash is felt between the gear teeth.
10. Set the adjusting nuts in the bores so that they just contact the bearing cups. The nuts should be engaged about the same number of threads on each side.
11. Carefully position the bearing caps on the carrier. Match the marks made when the caps were removed.
12. Install the bearing cap bolts and alternately torque them to 70-80 ft-lbs.
13. If the adjusting nuts do not turn freely as the cap bolts are tightened, remove the bearing caps and again inspect for damaged threads or incorrectly positioned caps. Tightening the bolts to the specified torque is done to be sure that the cups and adjusting nuts are seated.
14. Adjust the backlash between the ring gear and pinion and the differential bearing preload as outlined in the following procedure.

BACKLASH AND DIFFERENTIAL BEARING PRELOAD ADJUSTMENT

1. Loosen the cap bolts, then tighten them to only 35 ft-lbs torque before making adjustments. **The left adjusting nut is onthe ring gear side of the carrier. The right nut is on the pinion side. Tightening the left nut moves the ring gear into the pinion to decrease backlash, and tightening the right nut moves the ring gear away.**
2. Loosen the right nut until it is away from the cup (Fig. 40). Tighten the left nut until the ring gear is just forced into the pinion with no backlash. (Recheck the right nut at this time to be sure it is still loose). Tighten the right nut two notches

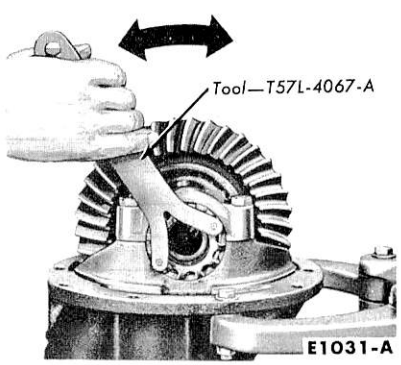

FIG. 40 Backlash Adjustments

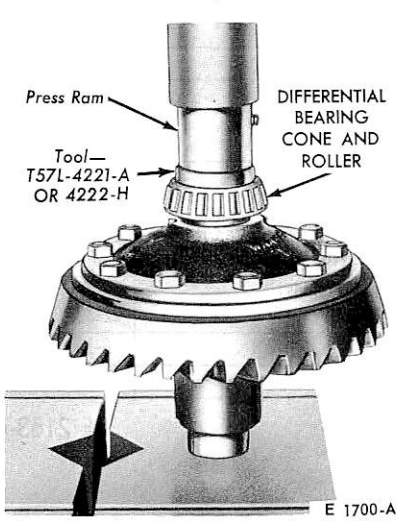

FIG. 39 Installing Differential Bearing

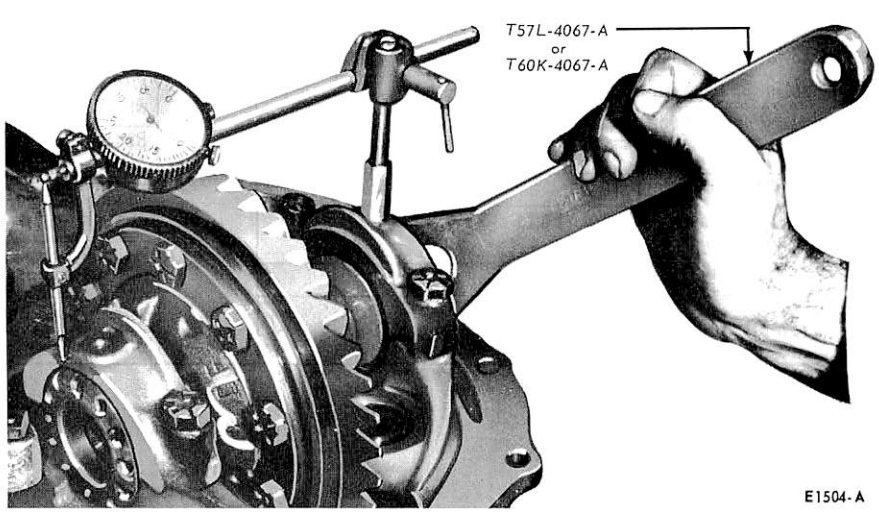

FIG. 41 Adjusting Side Bearing Preload

beyond the position where it first contacts the bearing cup. Rotate the ring gear several revolutions in each direction while the bearings are loaded to seat the bearings in their cups. **This step is important.**

3. Again loosen the right nut to release the preload. If there is any backlash between the gears, tighten the left nut just enough to remove this backlash. Install a dial indicator (Fig. 41) and carefully tighten the right nut until it just contacts the cup. Set preload of 0.008 to 0.012 for new bearings and .005 to .008 for used bearings by spreading the case using the right nut. As preload is applied from the right-hand side, the ring gear is forced away from the pinion and usually results in the correct backlash. The specified backlash for all gears is 0.008 to 0.012 inch. Tighten the differential cap bolts to the specified 75-80 ft-lbs torque.
4. Measure the backlash as shown in Fig. 42. Measure the backlash on several teeth around the ring gear. If the measurements vary more than 0.003 inch, there is excessive runout in the gears or their mountings, which must be corrected to obtain a satisfactory unit. If the backlash is out of specification, loosen one adjusting nut and tighten the opposite nut an equal amount, to move the ring gear away from or toward the pinion.

   When the adjusting nuts are moved, the final movement should always be made in a tightening direction. For example, if one nut has to be loosened one notch, loosen it two notches; then tighten it one.

   This procedure makes certain that the nut is contacting the bearing cup, and that the cup will not shift after being put in service.
5. Check the gear tooth contact as outlined in Specifications.

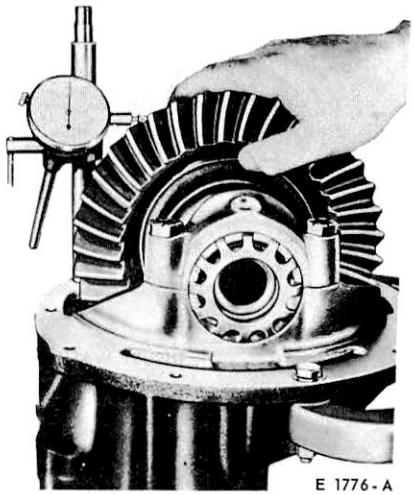

FIG. 42 Checking Backlash

SPECIFICATIONS

TRACTION-LOK DIFFERENTIAL SHIM PACK THICKNESS CHART

Feeler Gauge Reading (Inches)①	Remove Shim(s) From Nominal	Total Req'd Shim Pack Thickness (Inches)②	Feeler Gauge Reading (Inches)①	Remove Shim(s) From Nominal	Total Req'd Shim Pack Thickness (Inches)②
0.001-0.002	None	0.050	0.028-0.032	0.030	0.020
0.003-0.007	0.005	0.045	0.033-0.037	0.035	0.015
0.008-0.012	0.010	0.040	0.038-0.042	0.040	0.010
0.013-0.017	0.015	0.035	0.043-0.047	0.045	0.005
0.018-0.022	0.020	0.030	0.048-0.050	0.050	0.000
0.023-0.027	0.025	0.025			

① With clutch hub, shims and clutch plates compressed 10-15 ft.-lbs.
②Service shims are available in 0.010 inch and 0.005 inch thicknesses.

FORD AXLE TORQUE LIMITS (FT. LBS.)

Description	Ft-Lbs
Differential Bearing Cap Bolts	70-85
Differential Bearing Adjusting Nut Lock	12-25
Carrier to Housing Stud Nuts'	30-40
Pinion Retainer to Carrier Bolts	30-45
Ring Gear Attaching Bolts	65-80
Rear Axle Shaft Bearing Retainer Bolts	
Light Duty	30-40
Heavy Duty	50-70
① This rotating torque may fluctuate up to 40 ft. lbs.	

Description	Ft-Lbs
Minimum torque required to turn axle shaft and side gear with one wheel on the ground (Traction-Lok)	40
Bench Check with new plates Original plates (Traction-Lok)	100 to 250 ① 40 Minimum
Minimum Torque Required to Tighten Pinion Nut to Obtain Correct Pinion Bearing Preload	175
Pinion Bearing Preload (Inch-Pounds)	
New Bearings	22-32
Used Bearings	8-14
Oil Filler Plug	25-50

FORD REAR AXLE RATIOS GEAR AND CODE IDENTIFICATION

Ident. Tag	Ratio	Ring Gear Dia. (Inches)	Diff. Type ①	Ident. Tag	Ratio	Ring Gear Dia. (Inches)	Diff. Type ①
WDM-AJ1	3.50:1	9	C4	WEV-H	3.70:1	8 3/4	C2
WDM-T	3.50:1	8 3/4	C2	WEV-G	3.25:1	8 3/4	C2
WDM-U	3.70:1	8 3/4	C2	WEW-A	4.11:1	8 3/4	C2
WDM-W	3.50:1	9	C4	WEW-C	3.50:1	8 3/4	C2
WDM-AG1	3.00:1	9	C4	WEW-J	3.25:1	8 3/4	C2
WDM-AB1	4.11:1	9	C4	WEW-K	3.70:1	8 3/4	C2
WDM-AC	3.25:1	8 3/4	C2	WFE-A	3.70:1	8 3/4	T4
WDM-AH	3.25:1	9	C4	WFP-A2	4.11:1	8 3/4	T2
WDM-AF	3.25:1	8 3/4	C4	WFP-B2	3.50:1	8 3/4	T2
WEM-A2	4.11:1	8 3/4	C2	WFR-A2	4.11:1	8 3/4	T2
WEM-C2	4.57:1	9	C2	WFR-B2	3.50:1	8 3/4	T2
WEM-E2	3.50:1	8 3/4	C2				
WEV-A	3.50:1	8 3/4	C2				

①Type:
C2 - Conventional 2-Pinion
C4 - Conventional 4-Pinion
T2 - Traction-Lok 2-Pinion
T4 - Traction-Lok 4-Pinion

REAR AXLE ADJUSTMENTS—FORD

Description	Inch	Description	Inch
Backlash Between Ring Gear and Pinion	0.008–0.012	Nominal Locating Shim (Continued)	
Maximum Backlash Variation Between Teeth	0.003	Removable Carrier	0.015
Maximum Runout of Backface of Ring Gear	0.003	Shims Available (Steps of 0.001)	
Differential Side Gear Thrust Washer Thickness	0.030–0.032	Removable Carrier	0.010–0.029
Differential Pinion Gear Thrust Washer Thickness	0.030–0.032	Differential Bearing Preload (Case Spread)	
		New Bearings	0.008–0.012
		Original Bearings	0.003–0.005

CE2154-C

PART 15-15 Single Speed Single Reduction Axle-Eaton

Applies To 500-900 Series (Except F-750)

COMPONENT INDEX	Page	COMPONENT INDEX	Page
AXLE (COMPLETE)		DIFFERENTIAL CARRIER - Continued	
Description	15-01	Removal and Installation	15-02
Removal and Installation	15-02	PINION OIL SEAL	
DIFFERENTIAL CARRIER		Removal and Installation	15-02
Cleaning and Inspection	15-03	SPECIFICATIONS	15-06
Disassembly and Overhaul	15-03		

DESCRIPTION

Eaton Standard single-speed, single-reduction axles are installed as standard equipment on 500-9000 Series trucks. These axles are also used as the rearward rear axles on tandem single-speed, single-reduction units.

Since all of these axles are of the same basic design, the procedures given in this part apply to all unless otherwise noted.

DESCRIPTION

The axles are equipped with a straddle-mounted pinion. The opposed tapered-roller pinion bearings are press-fit installed on the drive pinion shaft. The straight-roller pilot bearing is pressed onto the inner end of the pinion (Fig. 1).

Shims of various thicknesses are installed between the pinion bearing retainer and the carrier housing. These shims provide a means for adjusting the pinion depth.

A spacer is installed between the inner and outer drive pinion bearings. This spacer is available in several thicknesses and is used to adjust the pinion bearing preload.

The four-pinion differential assembly is mounted in a two-piece case.

The tapered-roller differential side bearings are pressed onto the differential case hubs. The bearing cups are retained by the side bearing adjusters and by the side bearing caps. The side bearing adjusters thread into the bores formed by the bearing caps and the differential supports.

The axle shafts are full-floating, with the inner ends splined to the differential side gears. The axle shaft flanges are attached to the hubs with studs, lock washers, and nuts. The stud holes in the axle shaft flanges are taper reamed for the installation of split tapered dowels.

The differential carrier assembly may be removed while the axle is still installed in the vehicle.

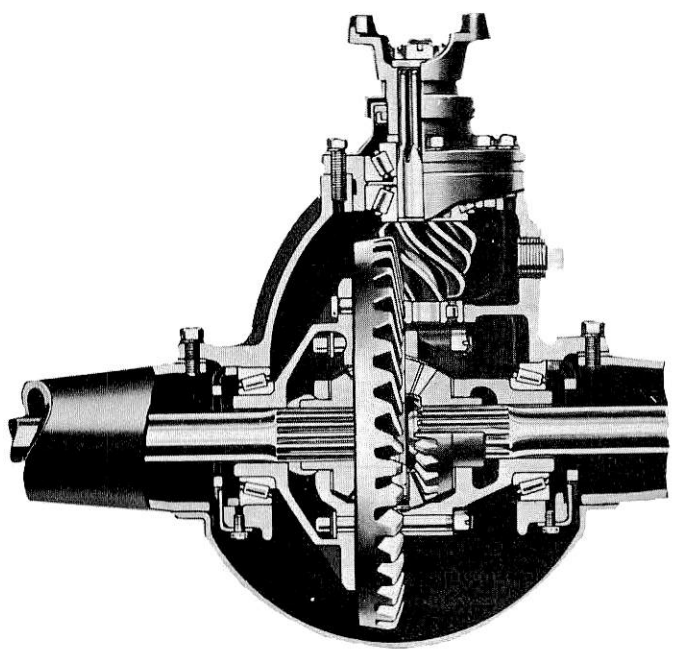

E2206-A

FIG. 1 Single-Speed Single-Reduction Axle

ADJUSTMENTS

Axle shafts, wheel hubs, wheel hub bearings, wheel hub grease seals, and the drive pinion oil seal can be replaced without removing the differential carrier assembly from the rear axle or the rear axle from the vehicle.

To lubricate, adjust, or replace the rear axle shafts, rear wheel hubs, bearings or grease seals, refer to Part 11-14.

DRIVE PINION OIL SEAL REMOVAL AND INSTALLATION

1. Disconnect the drive shaft from the rear universal joint pinion flange.
2. Hold the universal joint flange with the tool listed in Specifications. Remove the cotter pin, nut, and washer from the drive pinion shaft (Fig. 5).
3. Remove the flange using the tool listed in Specifications. Remove the bolts, which attach the oil seal retainer and pinion bearing retainer to the carrier. Remove the oil seal retainer and gasket.
4. Using the tool listed in Specifications, remove the oil seal from the retainer.
5. Coat the outside edge of a new oil seal with an oil-resistant sealer and press it into the oil seal retainer (Fig. 2). Apply a light coat of Lubriplate or similar lubricant to the contact areas of the seal and the pinion shaft.
6. Position the oil seal retainer and a new gasket against the pinion bearing retainer (Fig. 5 and 6). Install the bolts that attach the oil seal retainer and pinion bearing retainer to the differential carrier assembly and torque the bolts to specifications.
7. Install the universal joint flange, nut and washer using Tool-4851-A. Torque the nut to specifications and install the cotter pin.
8. Connect the drive shaft to the rear universal joint flange.
9. Check the lubricant level and fill if necessary as described under Adjustments in Part 15-01. Use the lubricant specified.

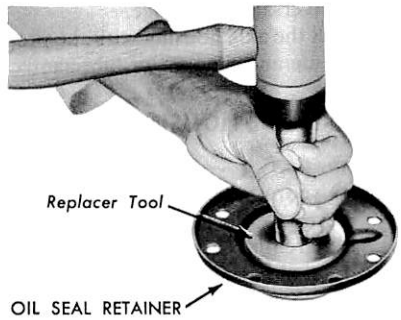

FIG. 2 Installing Drive Pinion Oil Seal

REMOVAL AND INSTALLATION

DIFFERENTIAL CARRIER

Removal

1. Drain and discard the axle lubricant.
2. Remove the axle shaft, stud nuts and lock washers.

If tapered dowels are installed in the axle shaft flange, hold a short drift firmly in the center of the axle shaft flange, and then strike it sharply to loosen the dowels. Remove the dowels and then remove the axle shaft.

Tapered dowels are not used at the axle shaft flange on most of the larger trucks. On these flanges, two puller threads are provided. Use one or both puller threads to remove the axle shafts (Refer to part 15-01).

3. Disconnect the drive shaft at the rear universal joint pinion flange.
4. Support the carrier assembly properly with a roller jack (Fig. 3). Then remove the carrier to housing stud nuts or bolts and lock washers.
5. Tighten the puller screws, when provided in the carrier, until the carrier is loosened from the housing. Carefully withdraw the carrier assembly from the axle housing, then back off the puller screws. Remove and discard the axle housing gasket.
6. Position the carrier on a transmission stand (Fig. 4) or in the open end of an oil drum approximately the same diameter as the carrier.

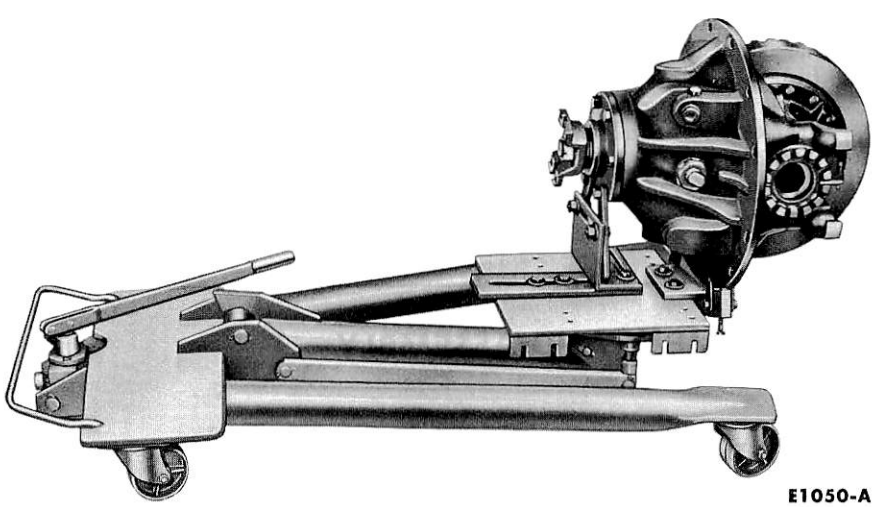

FIG. 3 Typical Differential Carrier Jack

Installation

1. Place a new carrier-to-housing gasket on the axle housing. **A dry gasket will prevent creeping between carrier and housing under heavy loads.**
2. Place the differential carrier assembly on a roller jack, and roll the carrier into position. Start the carrier into the housing with four capscrews (or stud nuts) equally spaced.
3. Tighten the capscrews (or nuts) alternately to draw the carrier squarely into the housing. Install the remaining carrier to housing lock washers and cap screws (or nuts), then torque to specification.
4. Install new gaskets on the wheel hubs, then install the axle shafts. Install the dowels, lock washers and stud nuts. Torque the nuts to specification.
5. Connect the drive shaft at the rear

universal joint flange.
6. Fill the axle housing with the proper grade and amount of lubricant.

REAR AXLE HOUSING

Removal

1. Disconnect the drive shaft and remove the axle shafts and differential carrier as outlined in the foregoing procedure.
2. Disconnect the rear shock absorbers from the spring seal caps or shock absorber brackets. Then raise the rear end of the vehicle frame until the weight is off the rear springs. Place safety stands under the frame in this position.
3. Disconnect the flexible hydraulic brake hose or air lines at the frame or frame crossmember.
4. Remove the nuts from the spring clips (U-bolts), and remove the spring seat caps and shock absorber brackets.
5. Roll the axle housing and rear wheels from underneath the vehicle.
6. Remove the wheels from the axle housing.

Installation

1. After installing the rear wheels, roll the axle assembly under the truck.
2. Install the spring clips (U-bolts), spring seat caps and shock absorber brackets. Torque the nuts to specifications.
3. Connect the rear shock absorbers.
4. Connect the hydraulic brake hose and bleed the brakes. If the axle is equipped with air brakes, connect the air lines.
5. Lower the vehicle to the floor. Install the differential carrier and axle shafts, and connect the drive shaft to the rear U-joint flange as outlined in the Removal procedure under Differential Carrier.

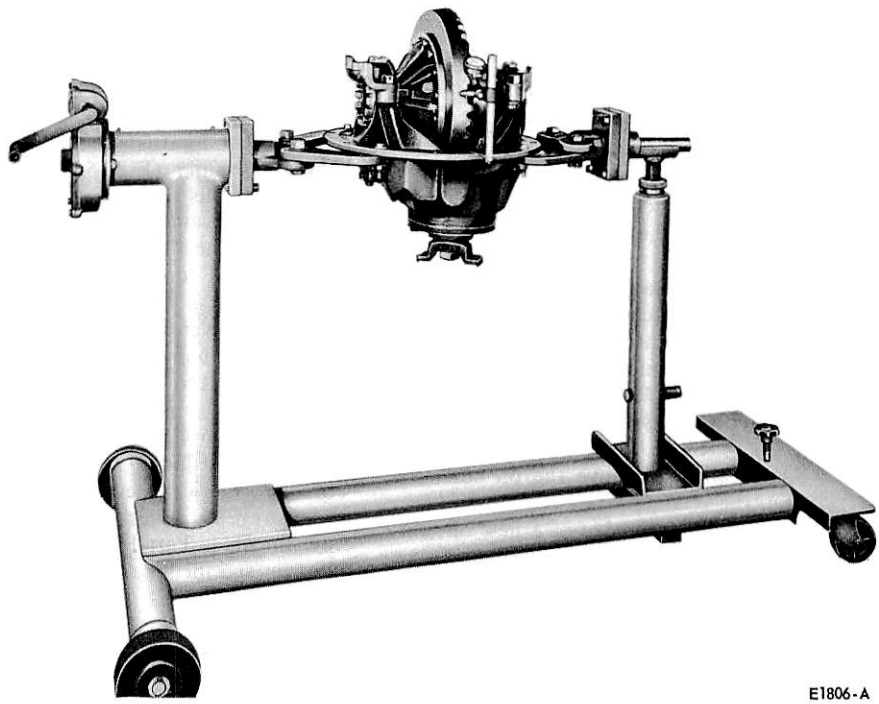

E1806-A

FIG. 4 Typical Differential Carrier Repair Stand

DISASSEMBLY AND ASSEMBLY

DIFFERENTIAL CARRIER

Disassembly

1. Inspect the axle before disassembly as given in Part 15-01.
2. Remove the oil distributor pipe plug, spring and the oil distributor from the carrier, if so equipped (Fig. 5).
3. Loosen the thrust block lock nut and screws, if so equipped, and then back out the clearance between thrust block and ring gear.
4. Mark one differential bearing cap and the corresponding carrier leg with a punch. These marks are to be used as a guide when installing the bearing caps.
5. Remove the adjuster locks.
6. Remove the bearing cap bolts and the bearing caps. Then lift the differential assembly out of the carrier.
7. Clamp the assembly in a vise equipped with soft jaws. Then remove the differential side bearings with a suitable puller.
8. Mark the differential case halves with a punch before disassembling, as this will aid in aligning the case when reassembling. Remove the bolts or capscrews.
9. Separate the case halves, using a brass hammer if necessary, then remove the side gears, spider, pinions and thrust washers.
10. While holding the drive pinion shaft stationary at the flange, remove the cotter pin, nut and washer from the drive pinion shaft.
11. Remove the flange using Tool T65L-4851-A or a suitable puller. Remove the bolts, which attach the oil seal retainer and pinion bearing retainer to the carrier (Fig. 5). Remove the oil seal retainer.
12. Drive the pinion shaft assembly out from the rear.
13. With a micrometer, measure the shim or shims which were installed between the pinion bearing retainer and the carrier housing.
14. Press the pinion out of the front pinion bearing and bearing retainer. Press the rear bearing and spacer off the pinion shaft (Fig. 6).
15. With a micrometer, measure the pinion bearing spacer thickness.
16. Press the pilot bearing off the shaft.
17. If the pinion bearing cups are to be replaced, press them out as shown in Fig. 7.
18. Clean and inspect the parts as given

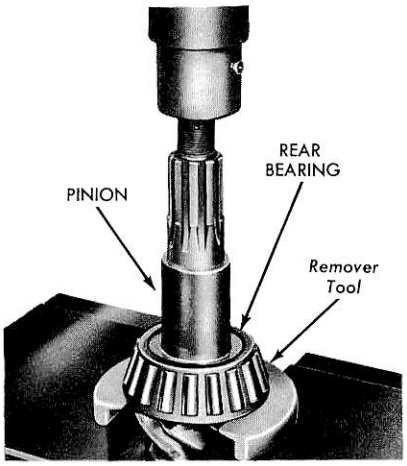

FIG. 6 Removing Pinion Rear Bearing Cone

in Part 15-01.

Assembly

1. Press the pinion pilot bearing on the pinion shaft. Stake the pinion shaft end in 4 places to hold the pilot bearing on (Fig. 8).
2. Press the pinion rear bearing on the shaft until seated against the back face of the pinion gear.
3. Press the pinion bearing cups in the bearing retainer (Fig. 9).
4. Install the pinion in the bearing retainer. Place the old spacer on the pinion shaft for a trial build-up. Install the pinion front bearing. Adjust and check the bearing preload as given in Part 15-01. Preload should be 15-35 in-lbs at correct torque on pinion bearing preload.
5. After the pinion bearing preload is adjusted, install a new oil seal. Install the gasket between the bearing retainer and the oil seal retainer. Install the universal joint flange.
6. If the pinion and ring gear set is being changed, adjust the shim thickness as given in Part 15-01.
7. Install the pinion and retainer assembly in the carrier housing using the correct shims. Install the capscrews, which attach the bearing retainer to the carrier housing. Torque the capscrews to specification.
8. If the ring gear is to be replaced, see Part 15-01, for the correct procedure.
9. Apply a coating of rear axle lubricant on the spider, pinions, side gears, and thrust washers, then assemble them in the ring gear half of the case. Align the punch marks and install the other half of the case. Install the retaining capscrews or the bolts and nuts, and torque to specification. Install the lock wire. Press the differential bearings on the case (Fig. 10).
10. Install the differential assembly and adjust the gear backlash and bearing preload as given in Part 15-01.
11. When the backlash and bearing preload are within limits, check the gear tooth contact pattern (Part 15-01).
12. Tighten the thrust block screw, if so equipped, until the thrust block touches the ring gear. Back off the screw at least 1/6 turn but not more than 1/4 turn to provide the proper clearance between the block and the ring gear. Tighten the lock nut while holding the screw in this position.
13. Install the oil distributor, if so equipped.

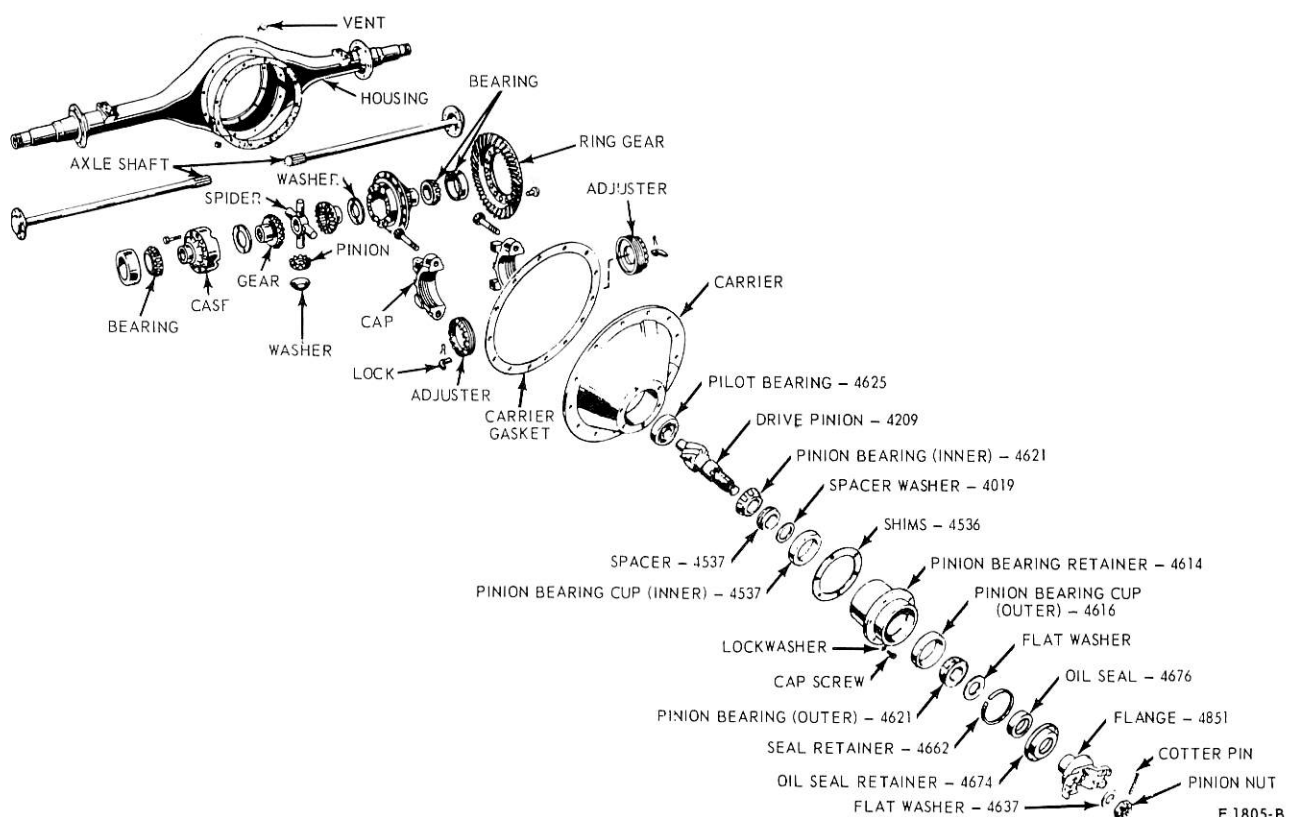

FIG. 5 Single-Speed Single-Reduction Axle

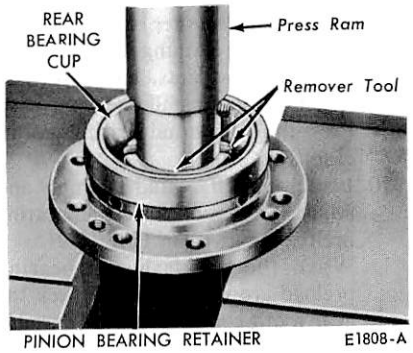

FIG. 7 Removing Pinion Bearing Cup

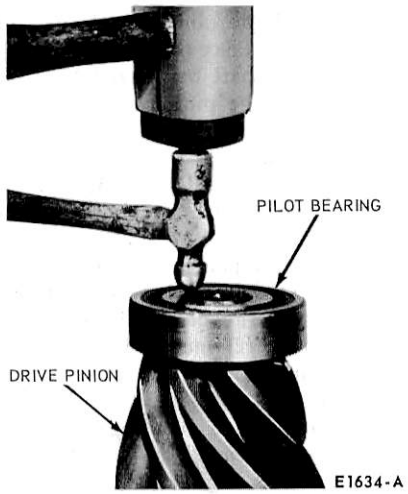

FIG. 8 Staking Pinion Pilot Bearing

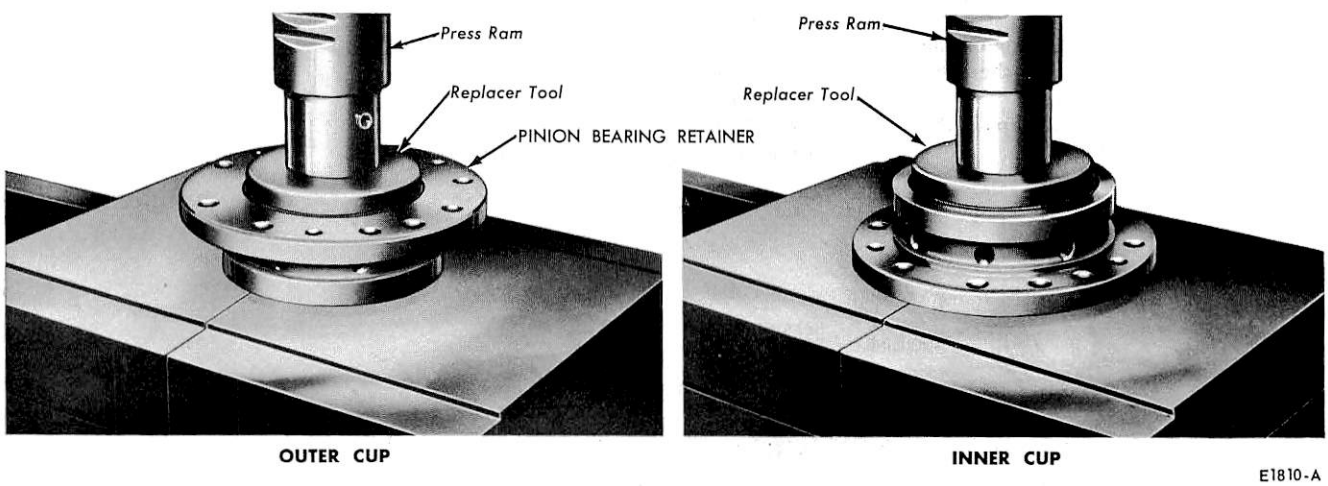

FIG. 9 Installing Pinion Bearing Cup

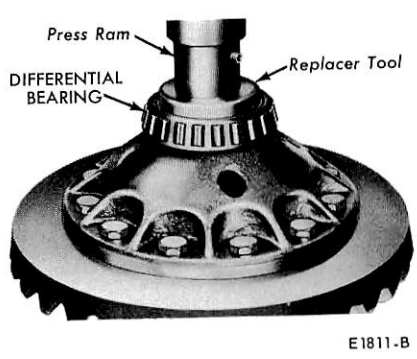

FIG. 10 Installing Differential Bearing

SPECIFICATIONS

TORQUE SPECIFICATIONS – EATON AXLES

Description		Ft-Lbs
Differential Bearing Adjuster Lock	Cap Screw 9/16-12 (Grade 5)	115–125
	Cap Screw 5/8-11 (Grade 5)	160–175
Differential Bearing Cap To Carrier	Cap Screw 5/8-11 (Grade 7)	150–170
	Cap Screw 11/16-11 (Grade 7)	210–250
	Cap Screw 13/16-10 (Grade 7)	320-380
Differential Carrier To Axle Housing	Cap Screw 7/16-14 (Grade 5)	45–55
	Cap Screw 1/2-13 (Grade 5)	75–85
	Cap Screw 5/8-11 (Grade 5)	160–175
	Stud Nut 5/8-18 (Grade 8)	220–240
Differential Case (Axle)	Cap Screw 7/16-14 (Grade 5)	45–55
	Cap Screw 7/16-14 (Grade 7)	55–65
	Cap Screw 1/2-13 (Grade 7)	85-105
	Cap Screw 9/16-12 (Grade 7)	135–155

Description		Ft-Lbs
Ring Gear To Differential Case	Bolt/Nut 7/16-20 (Grade 5)	50–60
	Bolt/Nut 1/2-20 (Grade 8)	90–100
	Bolt/Nut 5/8-18 (Grade 8)	190–200
Drive Pinion	Nut 1-20	220–350
	Nut 1 1/8-18	320–450
	Nut 1 1/4-12	400–600
	Nut 1 1/2-18	500–700
	Nut 1 3/4-12	550–850
Drive Pinion Bearing Cage To Carrier (or Power Divider Case)	Cap Screw 9/16-12 (Grade 5)	115–125
	Cap Screw 9/16-12 (Grade 7)	135–155
	Cap Screw 5/8-11 (Grade 5)	160–175
	Cap Screw 5/8-11 (Grade 7)	170–190
Inspection Cover To Axle Housing	Cap Screw 7/16-14 (Grade 3)	35–50
	Cap Screw 7/16-14 (Grade 5)	35-50
	Stud Nut 7/16-20 (Grade 8)	70–85

EATON AXLE DRIVE PINION ADJUSTMENT SPECIFICATIONS

Axle Models		Specifications for Drive Pinion Bearing Preload Adjustment				Drive Pinion Position Adjustment	
		Pinion Bearing Spacer Thickness	Drive Pinion Nut Torque Setting (ft-lbs)	Arbor Press Preload Pressure Setting (tons)	Spring Scale Reading (pounds) To obtain 15 to 35 in-lbs Torque	Pinion Bearing Cage Shim Pack	Depth Gauge Setting
SINGLE REDUCTION AXLES	17101, 17121	0.639	400–600	7-8	6-14	0.030+0.125 Spacer	4.2187
	18101, 18121	0.639	400–600	7-8	6-14	0.030+0.125 Spacer	4.2187
	19121	0.185	550–850	10-11	5-11	0.024	4.600

AXLE SHAFT FLANGE STUD NUT TORQUE LIMITS (ALL AXLES)

Thread Size	Torque Limits (Ft-Lbs)		Thread Size	Torque Limits (Ft-Lbs)
7/16-20	35-45		5/8-18	100-120
1/2-20	50-60		3/4-16	130-170 ①

① 160-200 Ft-Lbs on all 22000 pound and 23000 pound capacity axles.

CE 2204-B

PART 15-16 Single Speed Single Reduction Axle-Rockwell

Applies to 500-900 Series (Except F-750)

COMPONENT INDEX	Page	COMPONENT INDEX	Page
AXLE (COMPLETE)		DIFFERENTIAL CARRIER (Cont.)	
Description	16-01	Removal and Installation	16-02
Removal and Installation	16-03	PINION OIL SEAL	
DIFFERENTIAL CARRIER		Removal and Installation	16-02
Cleaning and Inspection	16-04		
Disassembly and Overhaul	16-03	SPECIFICATIONS	16-06

DESCRIPTION

Rockwell Standard single-speed, single-reduction axles are installed as standard equipment on 500-9000 Series trucks. These axles are also used as the rearward rear axles on tandem single-speed, single-reduction units.

Since all of these axles are of the same basic design, the procedures given in this part apply to all unless otherwise noted.

DESCRIPTION

The axles are equipped with a straddle-mounted pinion. The opposed tapered-roller pinion bearings are press-fit installed on the drive pinion shaft. The straight-roller pilot bearing is pressed onto the inner end of the pinion (Fig. 1).

Shims of various thicknesses are installed between the pinion bearing retainer and the carrier housing. These shims provide a means for adjusting the pinion depth.

A spacer is installed between the inner and outer drive pinion bearings. This spacer is available in several thicknesses and is used to adjust the pinion bearing preload.

The four-pinion differential assembly is mounted in a two-piece case.

The tapered-roller differential side bearings are pressed onto the differential case hubs. The bearing cups are retained by the side bearing adjusters and by the side bearing caps. The side bearing adjusters thread into the bores formed by the bearing caps and the differential supports.

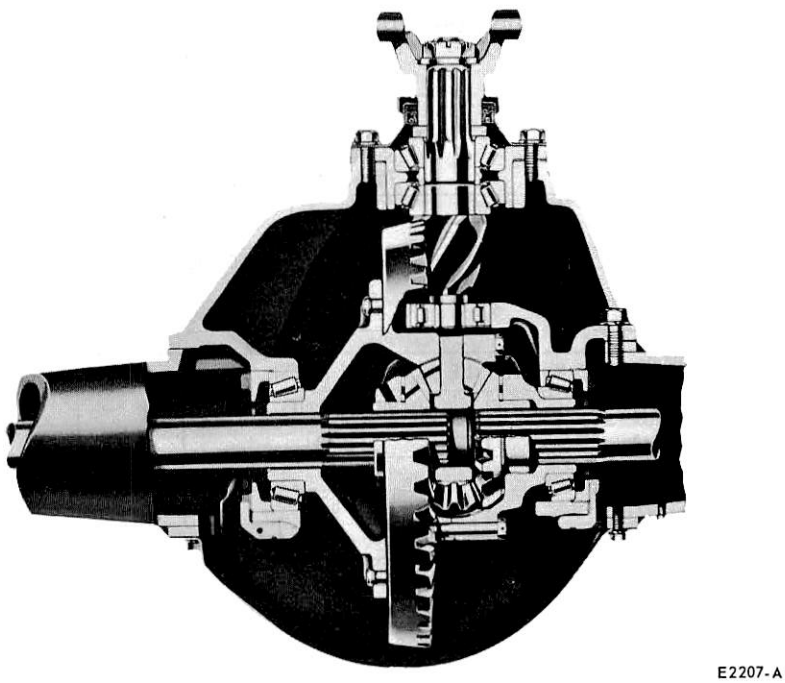

E2207-A

FIG. 1 Typical Single-Speed Single-Reduction Axles

The axle shafts are full-floating, with the inner ends splined to the differential side gears. The axle shaft flanges are attached to the hubs with studs, lock washers, and nuts. The stud holes in the axle shaft flanges are taper reamed for the installation of split tapered dowels.

The differential carrier assembly may be removed while the axle is still installed in the vehicle.

ADJUSTMENTS

Axle shafts, wheel hubs, wheel hub bearings, wheel hub grease seals, and the drive pinion oil seal can be replaced without removing the differential carrier assembly from the rear axle or the rear axle from the vehicle.

To lubricate, adjust, or replace the rear axle shafts, rear wheel hubs, bearings or grease seals, refer to Part 11-14.

DRIVE PINION OIL SEAL REMOVAL AND INSTALLATION

1. Disconnect the drive shaft from the rear universal joint pinion flange.
2. Hold the universal joint flange with the tool listed in Specifications. Remove the cotter pin, nut, and washer from the drive pinion shaft (Fig. 5).
3. Remove the flange using the tool listed in Specifications. Remove the bolts, which attach the oil seal retainer and pinion bearing retainer to the carrier. Remove the oil seal retainer and gasket.
4. Using the tool listed in Specifications, remove the oil seal from the retainer.
5. Coat the outside edge of a new oil seal with an oil-resistant sealer and press it into the oil seal retainer (Fig. 2). Apply a light coat of Lubriplate or similar lubricant to the contact areas of the seal and the pinion shaft.
6. Position the oil seal retainer and a new gasket against the pinion bearing retainer (Figs. 5 and 6). Install the bolts that attach the oil seal retainer and pinion bearing retainer to the differential carrier assembly and torque the bolts to specifications.
7. Install the universal joint flange, nut and washer using Tool-4851-A. Torque the nut to specifications and install the cotter pin.
8. Connect the drive shaft to the rear universal joint flange.
9. Check the lubricant level and fill if necessary as described under Adjustments in Part 15-01. Use the lubricant specified.

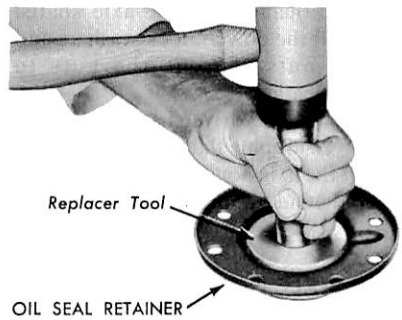

FIG. 2 Installing Drive Pinion Oil Seal

REMOVAL AND INSTALLATION

DIFFERENTIAL CARRIER

Removal

1. Drain and discard the axle lubricant.
2. Remove the axle shaft, stud nuts and lock washers.

If tapered dowels are installed in the axle shaft flange, loosen the dowels by holding a 1 1/2 inch diameter brass drift against the center of the axle shaft head, inside the circular driving lugs. Strike the drift a sharp blow with a 5 to 6 pound hammer or sledge. A 1 1/2 inch diameter brass hammer is an excellent and safe drift. **Do not hit the circular driving lugs on the shaft head. This could cause the lugs to shatter and splinter. Do not use chisels or wedges to loosen the shaft or dowels; this will damage the hub, shaft and oil seal.** Remove the dowels and then remove the axle shaft.

Tapered dowels are not used at the axle shaft flange on most of the larger trucks. On these flanges, two puller threads are provided. Use one or both puller threads to remove the axle shafts (Refer to Part 15-01).

3. Disconnect the drive shaft at the rear universal joint pinion flange.
4. Support the carrier assembly properly with a roller jack (Fig. 3). Then remove the carrier to housing stud nuts or bolts and lock washers.
5. Tighten the puller screws, when provided in the carrier, until the carrier is loosened from the housing. Carefully withdraw the carrier assembly from the axle housing, then back off the puller screws. Remove and discard the axle housing gasket.
6. Position the carrier on a transmission stand (Fig. 4).

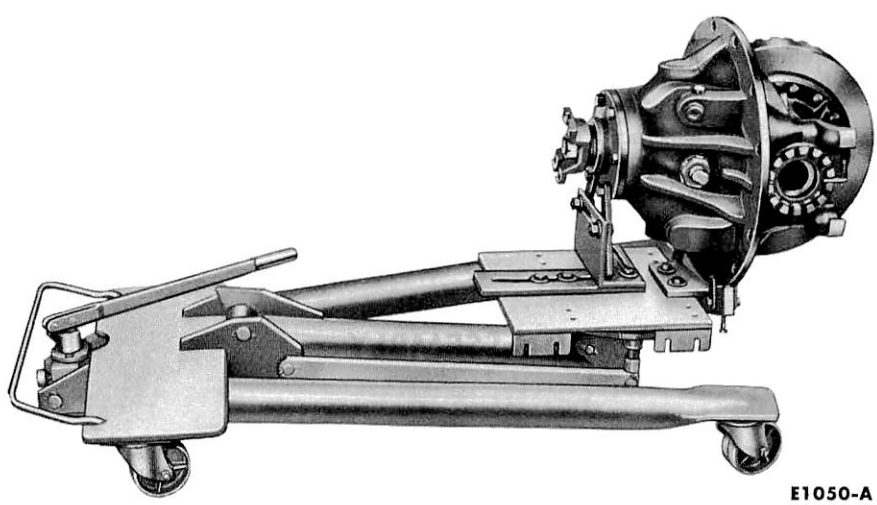

FIG. 3 Typical Differential Carrier Jack

Installation

1. Place a new carrier-to-housing gasket on the axle housing. **A dry gasket will prevent creeping between carrier and housing under heavy loads.**
2. Place the differential carrier assembly on a roller jack, and roll

the carrier into position. Start the carrier into the housing with four capscrews (or stud nuts) equally spaced.
3. Tighten the capscrews (or nuts) alternately to draw the carrier squarely into the housing. Install the remaining carrier to housing lock washers and capscrews (or nuts), then torque to specification.
4. Install new gaskets on the wheel hubs, then install the axle shafts. Install the dowels, lock washers and stud nuts. Torque the nuts to specification.
5. Connect the drive shaft at the rear universal joint flange.
6. Fill the axle housing with the proper grade and amount of lubricant.

REAR AXLE HOUSING

Removal
1. Disconnect the drive shaft.
2. Disconnect the rear shock absorbers from the spring seal caps or shock absorber brackets. Then raise the rear end of the vehicle frame until the weight is off the rear springs. Place safety stands under the frame in this position.
3. Disconnect the flexible hydraulic brake hose or air lines at the frame or frame crossmember.
4. Remove the nuts from the spring clips (U-bolts), and remove the spring seat caps and shock absorber brackets.
5. Roll the axle housing and rear wheels from underneath the vehicle. Remove the axle shafts and differential carrier as outlined in the foregoing procedure.
6. Remove the wheels from the axle housing.

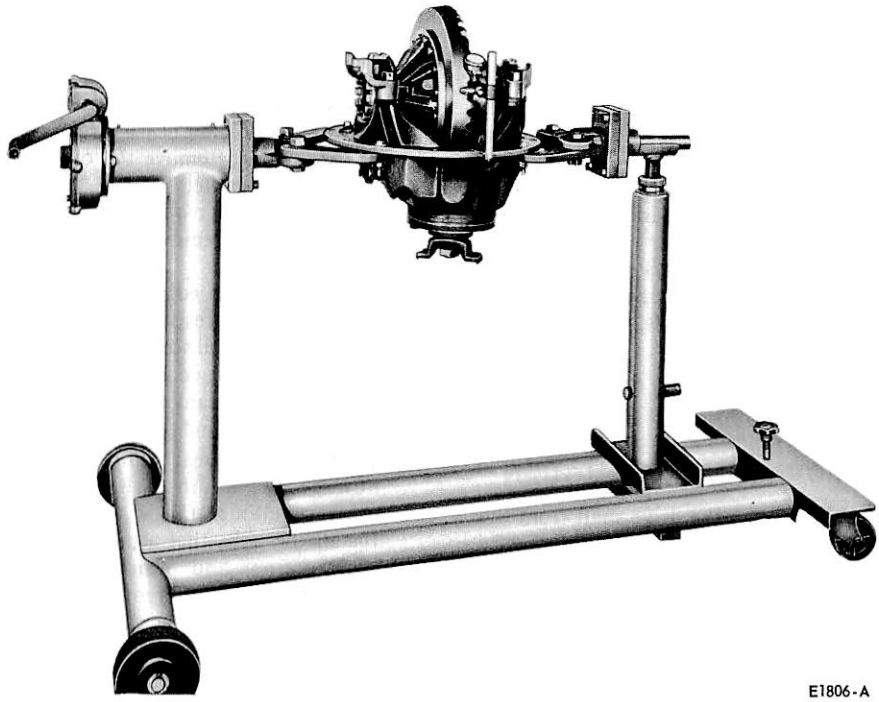
E1806-A

FIG. 4 Typical Differential Carrier Repair Stand

Installation
1. After installing the rear wheels, the axle shafts and the differential carrier, roll the axle assembly under the truck.
2. Install the spring clips (U-bolts), spring seat caps and shock absorber brackets. Torque the nuts to specifications.
3. Connect the rear shock absorbers.
4. Connect the hydraulic brake hose and bleed the brakes. If the axle is equipped with air brakes, connect the air lines.
5. Lower the vehicle to the floor. Install the differential carrier and axle shafts, and connect the drive shaft to the rear U-joint flange as outlined in the Removal procedure under Differential Carrier.

DISASSEMBLY AND ASSEMBLY

DIFFERENTIAL CARRIER

Disassembly
1. Inspect the axle before disassembly as given in Part 15-01.
2. Remove the oil distributor pipe plug, spring and the oil distributor from the carrier, if so equipped (Figs. 5 and 6).
3. Loosen the thrust block lock nut and screws, if so equipped, and then back out the thrust screw to provide clearance between the thrust block and ring gear when the differential is removed.
4. Mark one differential bearing cap and the corresponding carrier leg with a punch. These marks are to be used as a guide when installing the bearing caps.
5. Remove the adjuster locks.
6. Remove the bearing cap bolts and the bearing caps. Then lift the differential assembly out of the carrier.
7. Clamp the assembly in a vise equipped with soft jaws. Then remove the differential side bearings with a suitable puller.
8. Mark the differential case halves with a punch before disassembling, as this will aid in aligning the case when reassembling. Remove the bolts or capscrews.
9. Separate the case halves, using a brass hammer if necessary, then remove the side gears, spider, pinions and thrust washers.
10. While holding the drive pinion shaft stationary at the flange, remove the cotter pin, nut and washer from the drive pinion shaft.
11. **Remove the flange using Tool T65L-4851-A or a suitable puller. Remove the bolts, which attach the oil seal retainer and pinion bearing retainer to the carrier (Fig. 5). Remove the oil seal retainer.**

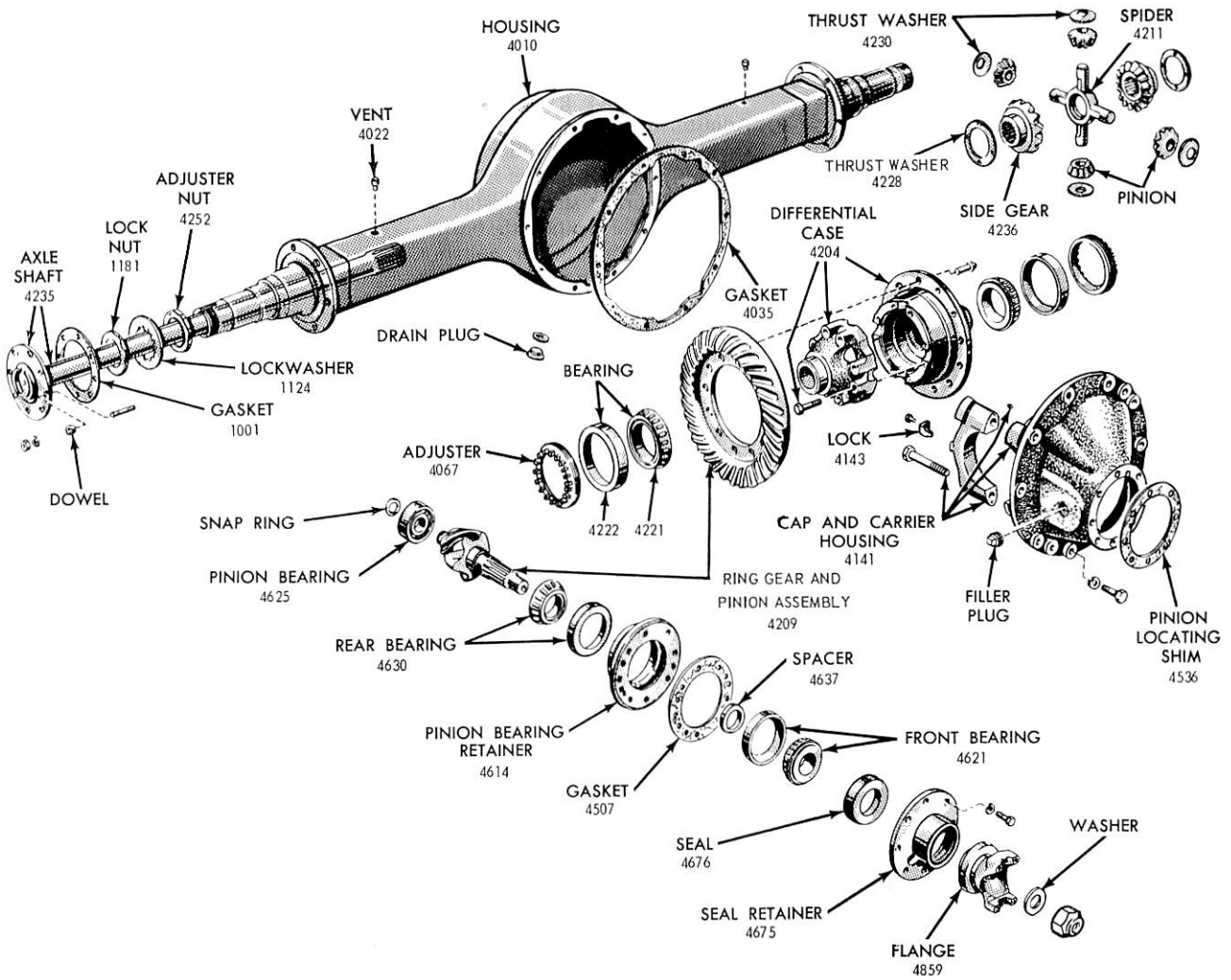

E1804-C

FIG. 5 Typical Single-Speed Single-Reduction Axle—Rockwell

12. On a Rockwell axle, install puller screws in the pinion bearing retainer. Tighten the screws evenly (3 to 5 turns each, one at a time) and pull the pinion and retainer assembly from the carrier housing. The use of a pinch bar will damage the shims. Driving the pinion from the inner end with a drift will damage the bearing locking groove.
13. With a micrometer, measure the shim or shims which were installed between the pinion bearing retainer and the carrier housing. Record this reading. No less than three shims are usually needed. Wire the shims together so they do not get misplaced, and to make assembly easier.
14. Press the pinion out of the front pinion bearing and bearing retainer. Press the rear bearing and spacer off the pinion shaft (Fig. 6).
15. With a micrometer, measure the pinion bearing spacer thickness.
16. On a Rockwell axle (Fig. 5) remove the snap ring that retains the pilot bearing on the pinion shaft. Press the pilot bearing off the shaft.
17. If the pinion bearing cups are to be replaced, press them out as shown in Fig. 7.
18. Clean and inspect the parts as given in Part 15-01.

Assembly

1. Press the pinion pilot bearing on the pinion shaft (with the large chamfer on the inner race toward the pinion teeth). On a Rockwell axle, install the pilot bearing retaining snap ring.
2. Press the pinion rear bearing on the shaft until seated against the back

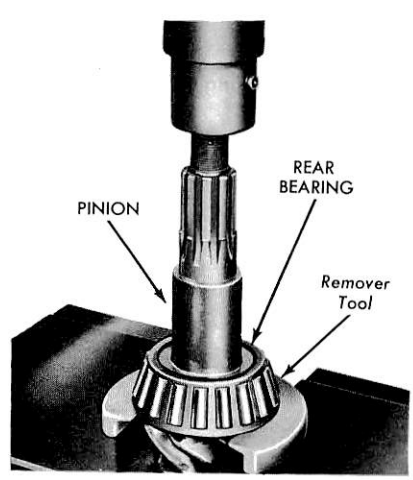

E1807-A

FIG. 6 Removing Pinion Rear Bearing Cone

face of the pinion gear.

3. Press the pinion bearing cups in the bearing retainer (Fig. 8).
4. Install the pinion in the bearing retainer. Place the old spacer on the pinion shaft for a trial build-up. Install the pinion front bearing. Adjust and check the bearing preload as given in Part 15-01.
5. After the pinion bearing preload is adjusted, install a new oil seal.

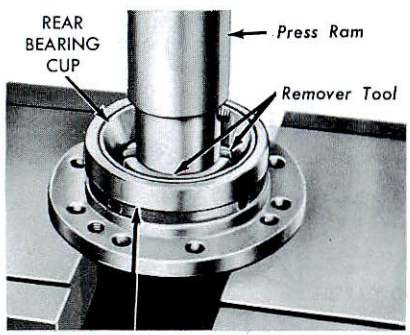

FIG. 7 Removing Pinion Bearing Cup

Install the gasket between the bearing retainer and the oil seal retainer. Install the universal joint flange.

6. If the pinion and ring gear set is being changed, adjust the shim thickness as given under Adjustments in Part 15-01.
7. Install the pinion and retainer assembly in the carrier housing using the correct shims. Install the capscrews, which attach the bearing retainer to the carrier housing. Torque the capscrews to specification.
8. If the ring gear is to be replaced, see Part 15-01 for the correct procedure.
9. Apply a coating of rear axle lubricant on the spider, pinions, side gears, and thrust washers, then assemble them in the ring gear half of the case. Align the punch marks and install the other half of the case. Install the retaining capscrews or the bolts and nuts, and torque to specification. Install the lock wire. Press the differential bearings on the case (Fig. 9).
10. Install the differential assembly and adjust the gear backlash and bearing preload as given in Part 15-01.
11. When the backlash and bearing preload are within limits (see Specifications) check the gear tooth contact pattern (Part 15-01).
12. Tighten the thrust block screw, if so equipped, until the thrust block touches the ring gear. Back off the screw at least 1/6 turn but not more than 1/4 turn to provide the proper (0.010-0.020) clearance between the block and the ring gear. Tighten the lock nut while holding the screw in this position.
13. Install the oil distributor, if so equipped.

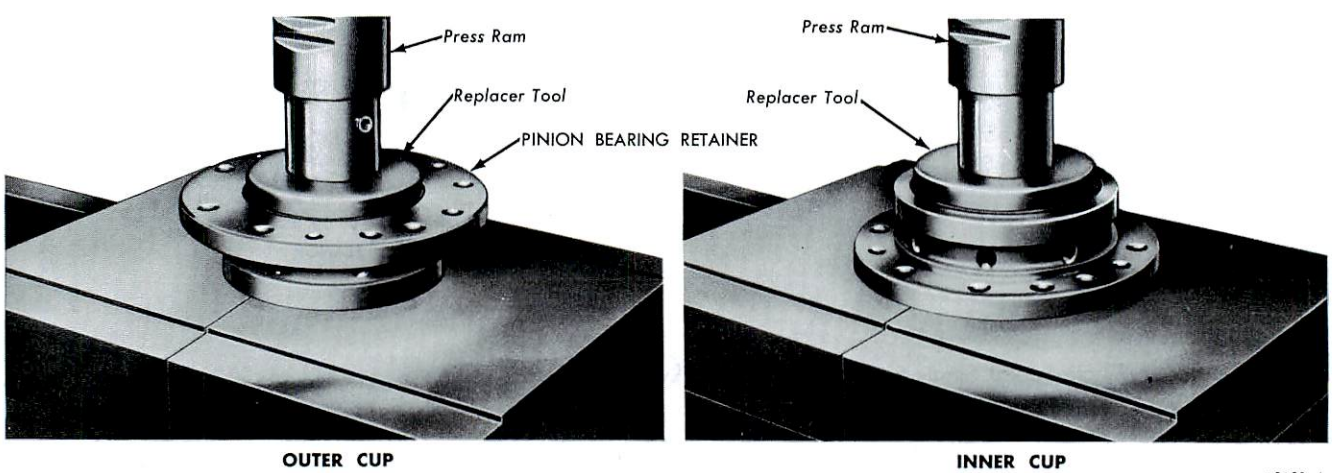

FIG. 8 Installing Pinion Bearing Cup

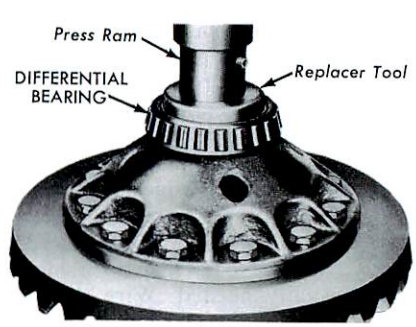

FIG. 9 Installing Differential Bearing

SPECIFICATIONS

BACKLASH BETWEEN RING GEAR AND PINION (ROCKWELL)

Axle	Backlash (Inch)	Drive Gear Runout (Inch)
Rockwell Single Speed Single Reduction	0.005-0.015	0.008 Maximum

ROCKWELL BEARING PRELOAD

Axle Model	Pinion Shaft Nut-Thread Size and Torque Limits Foot-Pounds (Prevailing Torque Nuts)		Press Ram Pressure for Preload Check (Tons)	Pinion and Cross Shaft Bearing Preload (Inch Pounds)	Differential Bearing Preload (Case Spread)
Single Speed Single Reduction	7/8x20	240-315	6	5-15	0.006-0.010
	1-20	500-600	6		
	1-1/4x18	800-1000	11		
	1-1/2x18	500-600	14		
	1-3/4x12	1000-1300	14		

TORQUE SPECIFICATIONS FOR ALL ROCKWELL STANDARD AXLES

Cap Screws or Stud Nuts			
Location	**Diameter**	**Threads per In.**	**Torque-Ft-Lbs Min.-Max.**
These torques are given according to diameter and threads per in. The torque will be the same for a specific size no matter where the bolt or cap screw is used on the axle	3/8	24	38-49
	3/8	16	33-43
	7/16	14	53-67
	7/16	20	59-75
	1/2	13	81-104
	1/2	20	92-118
	9/16	12	116-149
	9/16	18	130-167
	5/8	11	160-205
	5/8	18	185-235
	3/4	10	290-370
	3/4	16	320-415
	7/8	9	470-595
	7/8	14	510-655
	1	14	780-1000
Torques given apply to parts coated with machine oil for dry(as received) parts increase torques 10%; for parts coated with multi-purpose gear oil decrease torque 10%. Nuts on studs to use same torque as for driving stud.			

AXLE SHAFT FLANGE STUD NUT TORQUE LIMITS (ALL AXLES)

Thread Size	Torque Limits (Ft-Lbs)		Thread Size	Torque Limits (Ft-Lbs)
7/16-20	53-67		5/8-18	160-205
1/2-20	81-104		3/4-16	130-170 ①
			9/16-18	116-149
① 160-200- Ft-Lbs on all 22000 pound and 23000 pound capacity axles.				

CE2205-C

PART 15-20 2-Speed Double Reduction Axle-Eaton

Applies to All 500-9000 Series

COMPONENT INDEX	Page	COMPONENT INDEX	Page
AXLE HOUSING		DIFFERENTIAL CARRIER (Cont.)	
Removal and Installation	20-03	Removal and Installation	20-03
		ELECTRICAL SHIFT UNIT	
DIFFERENTIAL CARRIER		Disassembly and Overhaul	20-06
Cleaning and Inspection	20-05	Removal and Installation	20-03
Disassembly and Overhaul	20-04	SPECIFICATIONS	20-08

DESCRIPTION

Eaton 2-speed and double-reduction rear axles are available on 500-9000 series trucks. These axles are also used as the rearward axles on Eaton tandem 2-speed and double-reduction units.

DIFFERENTIAL CARRIER

Two-speeds and double-reduction are obtained in these axles by a planetary gear set which operates between the differential ring gear and the differential case.

In the two-speed axles, the planet gear set can be shifted into low speed (reduction) or into high speed (direct) (Fig. 1).

In the double-reduction tandem axles, the planet gear set is permanently locked in the low-speed position (Fig. 1).

Figure 2 shows the power flow through the axle. In the low-speed or double-reduction position, the drive pinion drives the planetary ring gear (first reduction). The planetary ring gear drives the planetary ppinions which are mounted on the differential case. Since the planetary sun gear is locked to the carrier housing and cannot turn, the planetary pinions are forced to walk around the sun gear. This walking around causes the differential case to rotate slower than the ring gear (second reduction). The differential case and spider pinions drive the side gears in the conventional way.

In a 2-speed tandem, the shift from low-speed to high-speed is made by unlocking the planetary sun gear from the carrier housing and locking it to the differential case. This causes the planetary gear set to rotate as a unit so that the second reduction is eliminated.

In a typical two-speed axle in low-speed operation, the drive from the transmission is reduced in the ratio of 5.57:1 between the drive pinion and the differential ring gear. The drive at the differential ring gear is further reduced by the planetary gear set operating between the differential ring gear and the differential case, hence double reduction.

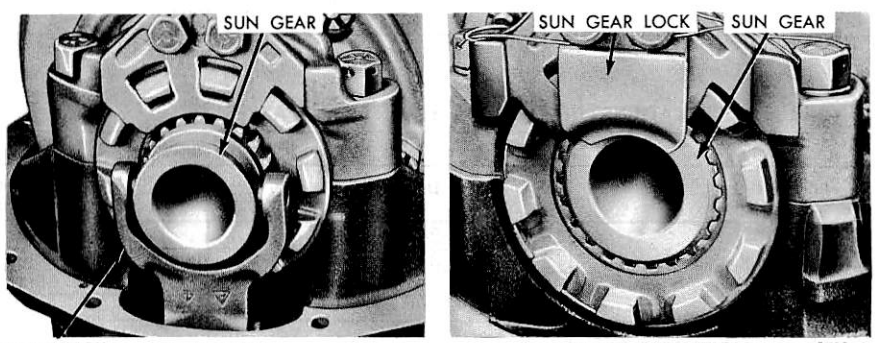

FIG. 1 Two-Speed and Double-Reduction Sun Gears

In high-speed operation, the planetary reduction is eliminated and the final axle drive ratio is now only that of the drive pinion and differential ring gear (5.57:1).

Axle Lube Filtering

An external filter with a reinforced paper element is used. Lubricant from the ring gear flows into the top of the filter, down through the element, and returns to the axle reservoir. Non-magnetic, as well as magnetic, particles are removed from the lubricant, promoting longer axle life. This by-pass filtering system does not affect Eaton axle forced-flow lubrication. Maintenance requires only the removal of one nut and the cover, to replace the element.

Also, a drain plug to which magnetic discs are attached is available. This provides an additional method of filtering metallic particles out of the axle lubricant.

ELECTRICAL SHIFT CONTROL

An electric shift control is used in conjunction with the two-speed axles.

The electric shift control system is composed of the control switch, the speedometer adapter, the axle shift unit, the circuit breaker, and the wiring harness.

The control switch, mounted on the gear shift lever (Fig. 3), has two positions-up for high axle range and down for low axle range. When the switch is in either of these positions, a slide-contact, attached to the control switch shaft, completes the circuit between the battery and the motor in the axle shift unit (Fig. 4).

The speedometer adapter is installed between the transmission and speedometer, and compensates for variations in the speed of the drive shaft between the high and low speed ranges of the axle. The adapter is held in the high range by a spring and in the low

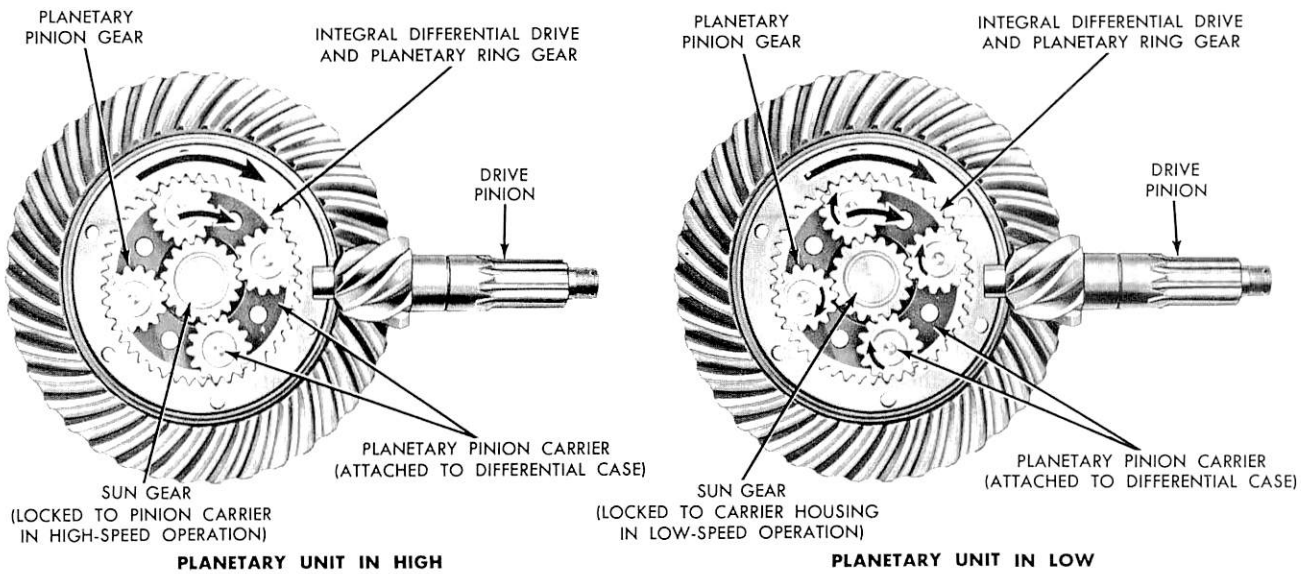

FIG. 2 Power Flow Planetary Two-Speed Axles

range by an electromagnet. The inner mechanism is prelubricated and sealed by the manufacturer. In the event of failure, the adapter is replaced as a unit.

The axle shift unit is mounted on the differential carrier. This unit contains a reversible electric motor which, when energized, shifts the axle into the desired range through the mechanism contained in the unit. The position of the mechanism in both axle ranges is shown in Fig. 5.

A circuit breaker protects the system against a short circuit. Should a short circuit occur, the breaker will intermittently de-energize the entire system until the trouble has been corrected.

High Speed Range

When the control button is placed in the up position, current is supplied to one field of the motor in the axle shift unit. This current turns the armature and the drive screw in a clockwise direction and moves the nut toward the bottom of the screw (Fig. 5).

When the nut has traveled far enough to wind the spring, a contact bumper on the nut breaks an electrical connection on the automatic switch, which de-energizes the motor and stops armature rotation. The nut is held at the end of its travel by a ball screw detent spring mounted on the front cover.

As the nut moves downward, the spring winding lever, which pivots on a

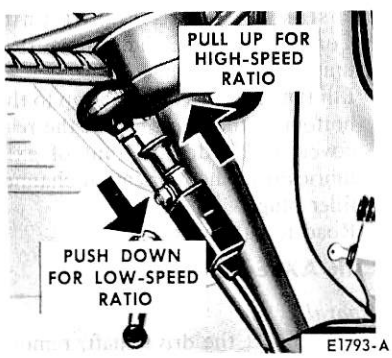

FIG. 3 Control Switch Gear Shift Lever

pin in the nut, winds the torsion spring. Thus the tension of the spring is increased, and in this position, the axle is ready to shift into the high speed ratio as soon as the load on the axle gear is relieved.

The torsion spring is assembled in the unit so that it is under 50 to 80 pounds pressure. When the spring is wound by the winding lever, this tension is increased to 90 to 150 pounds. This additional pressure is used to shift the axle. When the shift is completed, the ends of the spring come together, leaving the original tension in the spring. This preload tension holds the axle in either range.

Low Speed Range

When the button is placed in the down position, current is supplied to the

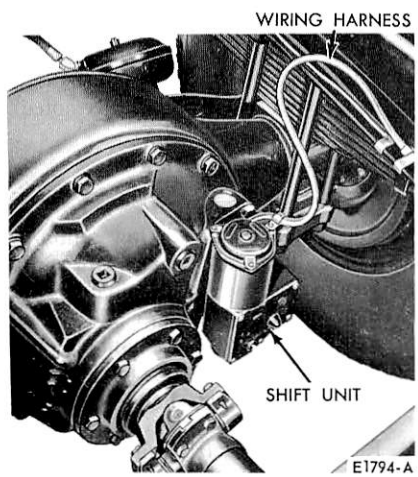

FIG. 4 Typical Axle Shift Unit Installation

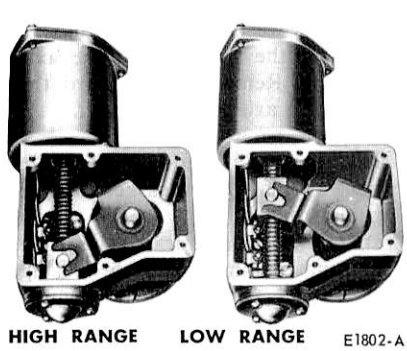

FIG. 5 Axle Shift Control Positions

other field of the motor and to the speedometer adapter. The current now causes the armature and screw to turn counterclockwise, and the nut travels toward the top of the screw (Fig. 5). This winds the torsion spring, for a shift to low range which is accomplished in the same manner as the shift to high range.

ADJUSTMENTS

Axle shafts, wheel hubs, wheel hub bearings, wheel hub grease seals, the electric shift unit, and the differential drive pinion oil seal can be replaced without removing the differential carrier assembly from the axle housing or the rear axle assembly from the vehicle.

The axle shafts, wheel hub, bearings, and grease seals may be replaced, lubricated, or adjusted as detailed under Adjustments in Part 15-01.

The drive pinion oil seal may be replaced as detailed in Part 15-15 under Adjustments.

The electric shift unit can be replaced or overhauled as described in the following sections.

REMOVAL AND INSTALLATION

The Eaton two-speed rear axle and the Eaton planetary double-reduction rear axle are of the same basic design and operation. The following procedures for Removal and Installation will apply to both axle designs except where specifically noted.

DIFFERENTIAL CARRIER

Removal

1. Shift the axle into the low ratio.
2. Drain and discard the axle lubricant.
3. Remove the axle shaft, stud nuts and lock washers. Strike the center of the axle shaft flange with a hammer and drift to loosen the tapered dowels. Remove the axle shafts from the housing.
4. Remove the electric shift unit from the carrier housing. Disconnect the drive shaft at the rear universal joint flange.
5. Support the carrier on a roller jack. Remove the carrier to housing bolts and lock washers (or stud nuts).
6. Remove the carrier from the axle housing. Remove and discard the carrier to axle housing gasket.

Installation

1. Install guide studs in the axle housing. Place a new gasket over the guide studs.
2. Install the carrier in the axle housing. As the carrier to housing bolts are installed, remove the guide studs. Torque the bolts (or nuts) to specifications.
3. Install the axle shafts through the housing ends so that they will spline to the differential side gears. Install the tapered dowels, lock washers, and axle shaft flange stud nuts.
4. Install the electric shift unit. Connect the drive shaft at the rear universal joint flange.
5. Fill the axle with lubricant up to the bottom of the filler hole in the rear cover, then add one pint of axle lubricant at the lubrication channel filler plug.
6. Road test the vehicle.

REAR AXLE HOUSING

Removal

1. Disconnect the drive shaft, remove the axle shafts, and remove the differential carrier as outlined in the foregoing procedure.
2. Disconnect the rear shock absorbers from the shock absorber lower attaching brackets, if so equipped. Then raise the rear end of the vehicle frame until the weight is off the rear springs. Place safety stands under the frame in this position.
3. Disconnect the flexible hydraulic hose on air line at the frame.
4. Remove the nuts from the spring clips (U-bolts), and remove the spring seats and lower shock absorber attaching brackets.
5. Roll the axle from under the vehicle. Remove the wheels.

Installation

1. After installing the rear wheels, roll the axle assembly under the vehicle.
2. Install the spring clips (U-bolts), spring seats, and shock absorber lower brackets and torque to specifications shown in Group 14-31.
3. Connect the rear shock absorbers. Lower the vehicle to the floor.
4. Connect the air line or hydraulic brake hose and bleed the brakes.
5. Install the differential carrier and axle shafts, and connect the drive shaft as outlined under Installation in the foregoing procedure.

ELECTRIC SHIFT UNIT

Removal

1. Disconnect the two wires which lead to the axle shift unit. Quick disconnects will be found between the second (from the rear) and third harness retainer clips on the left frame rail.
2. Remove the two shift unit housing to carrier stud nuts and lock washers, and remove the unit from the carrier (Fig. 4).

Installation

1. Position the lead wires on the housing terminals. **The red wire must be installed on the lower terminal. After wiring corrections have been made, cover the entire area of terminals and wire connectors with plastic resin sealer (C3AZ-19560-A), to prevent corrosion damage to terminal connections. Sealer should be firmly pressed in place by hand.**
2. Position the shift unit on the differential carrier studs with the torsion spring swivel block installed in the shift fork slot, then install the lock washers and stud nuts.
3. Tighten the stud nuts to specifications. Fill the shift unit, to

the level of the filler plug, with the correct lubricant.

4. Connect the motor wire at the quick disconnects, and install the harness clips on the frame rail.

DISASSEMBLY AND ASSEMBLY

DIFFERENTIAL CARRIER

Disassembly

1. Inspect the carrier before disassembly as given in Part 15-01.
2. After removing the oil distributor plug if so equipped, (Fig. 6), pull the oil distributor and spring out of the differential carrier.
3. Remove the shift fork shaft plugs, and remove the shaft.
4. Remove the shift fork seal and the shift fork from the housing. Pull the sliding clutch gear out of the differential carrier (Fig. 7).
5. Mark the right and left bearing adjusters with a punch to aid in relocating the adjustment when reassembling. Remove the lock wires from the differential bearing cap bolts, and remove the bolts.

Back off one bearing adjusting nut to relieve the bearing preload.

6. Remove the right and left bearing caps, bearing adjusters, and locks.
7. Lift the differential and planetary assembly out of the differential side

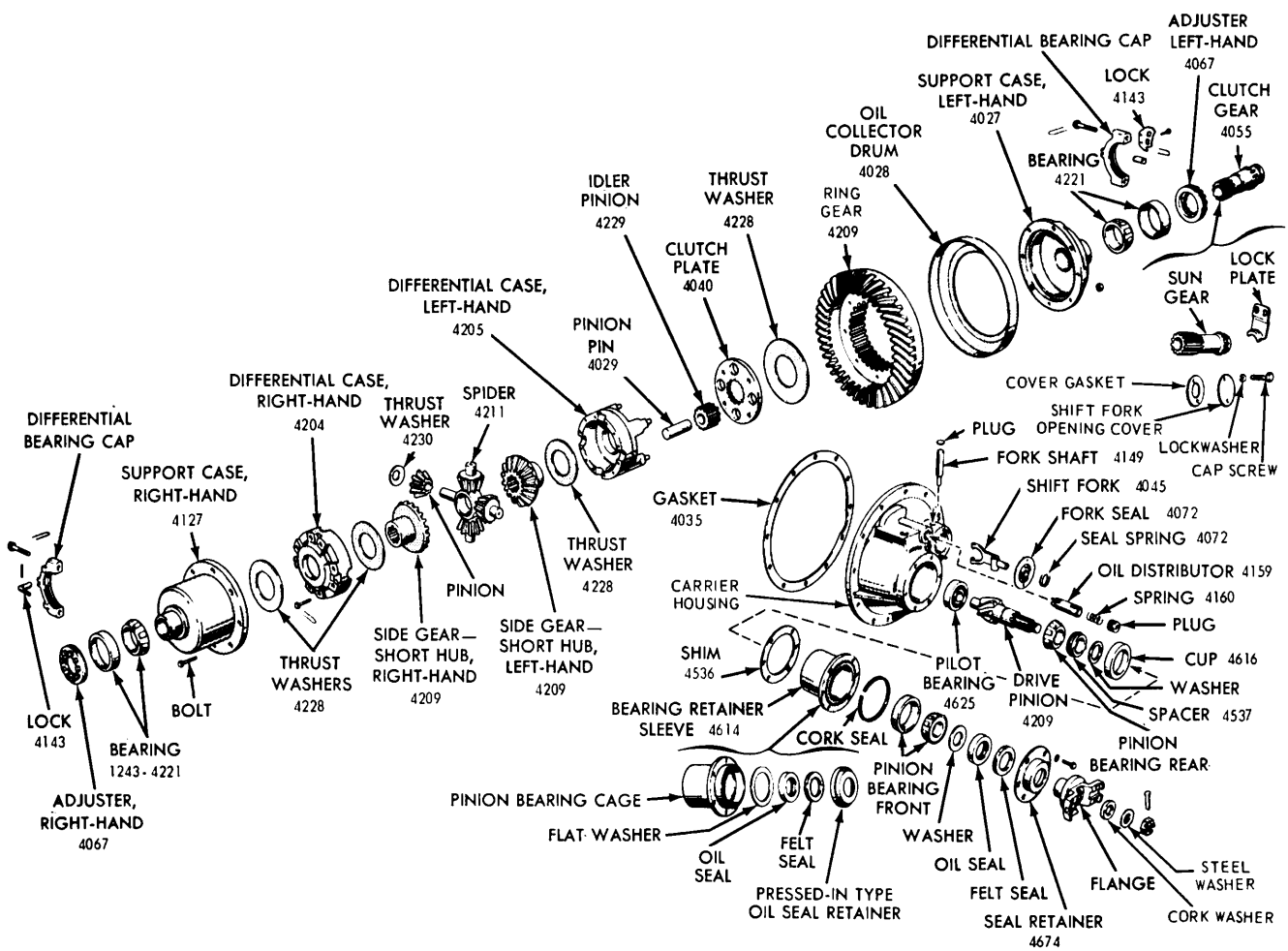

E 1801-C

FIG. 6 Eaton planetary Two-Speed or Double-Reduction Axle

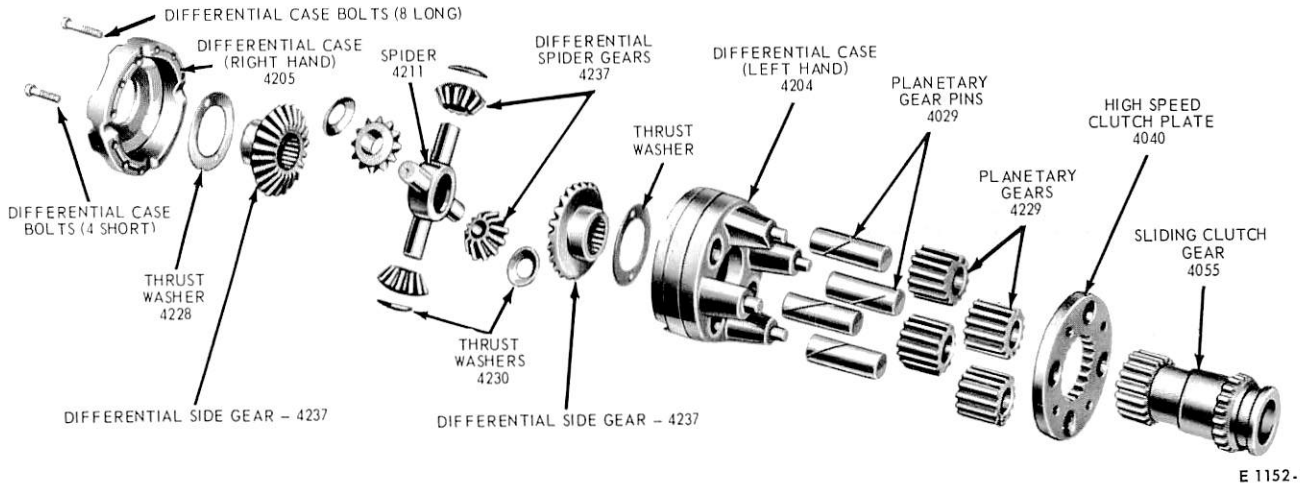

FIG. 7 Planetary and Differential Assembly

bearing cups.

8. Mark the right and left support cases so that they can be reassembled in the same relative position. Remove the lock wire and nuts from the bolts which hold the ring gear to the gear support cases. Remove the bolts.
9. Clamp the differential assembly in a soft-jaw vise with the ring gear end up.
10. Tap the ring gear with a soft hammer on the gear tooth side until the gear is free of the flange on the right support case (Fig. 6).
11. Lift the left support case, thrust washer, oil collector drum (if so equipped) and ring gear from the right support case.
12. Remove the high-speed clutch plate from the differential case by tapping on each side alternately with a soft hammer.
13. Remove the planetary gears and planetary gear pins.
14. **Lift the differential assembly out of the right support case. Remove the thrust washer from the support case. Mark the two pieces of the differential case for proper assembly.**
15. Remove the lock wire and capscrews from the differential assembly, and separate the right and left differential cases. Remove the differential side gears and thrust washers.
16. Remove the differential spider gears, thrust washers, and the differential spider (Fig. 7).
17. If the differential support case bearings are to be replaced, they may be removed with a drift (Fig. 8). Press on the new bearings so that the ram pressure is against the bearing inner race and not against the roller cage (Fig. 8).

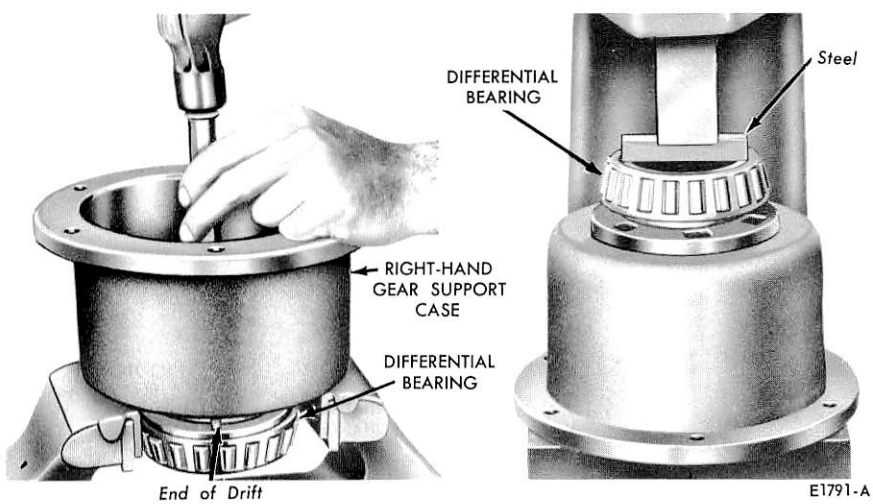

FIG. 8 Removing or Installing Differential Bearing

18. Hold the pinion shaft flange and remove the pinion shaft nut.
19. Remove the bolts that attach the pinion bearing sleeve to the carrier housing. With a drift, drive the pinion assembly out of the front of the carrier housing.
20. **Place the pinion assembly on a press bed and press the pinion shaft out of the pinion shaft flange and pinion shaft front bearing cone. Remove the bearing preload spacer from the pinion shaft.**
21. If the pinion rear bearing cone is to be replaced, remove the pilot bearing with the type of tool shown in Fig. 9. Then, remove the pinion rear bearing cone with the type of tool shown in Fig. 10.
22. If the pinion bearing cups are to be replaced they may be removed with a steel bar as shown in Fig. 11.
23. Inspect the parts as given in Part 15-01.

Assembly

1. Press the pilot bearing on the pinion shaft and stake the pinion shaft end at 4 points.
2. Press the pinion rear bearing onto the pinion shaft until seated.
3. To install a new bearing cup, place the pinion bearing retainer sleeve in a press and, using a steel bar, press the cup in the sleeve until it is seated against the recess in the sleeve (Fig. 11). Repeat this operation for the other cup.
4. Install the pinion in the bearing retainer sleeve. Place the old spacer on the pinion shaft for a trial build up. Install the spacer washer and the pinion front bearing.
5. Check and adjust the pinion bearing preload as given in Part 15-01.
6. Install a new oil seal in the seal retainer or bearing sleeve.
7. Press the universal joint flange on the pinion shaft. Install the flat

washer and nut. Tighten the nut to specifications.

8. If the pinion and ring gear are being replaced, adjust the shim pack between the pinion bearing sleeve and carrier housing as given in Part 15-01.
9. Install a new gasket in the pinion bearing sleeve, if so equipped.
10. Place the shim pack on the bearing sleeve and install the pinion and sleeve assembly in the carrier housing. Install the sleeve to housing bolts and lock washers. Tighten to specified torque.
11. Place the left half of the differential support case (Fig. 7) in a vise with the planetary side facing downward. Place one of the differential side gear thrust washers in position in the case. Place the differential left-hand side gear (with the short hub) in position in the case.

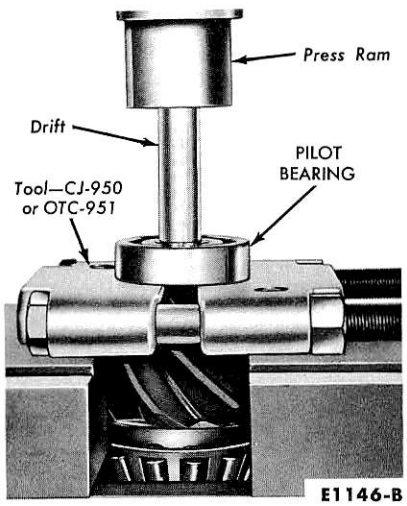

FIG. 9 Removing Pinion Pilot Bearing

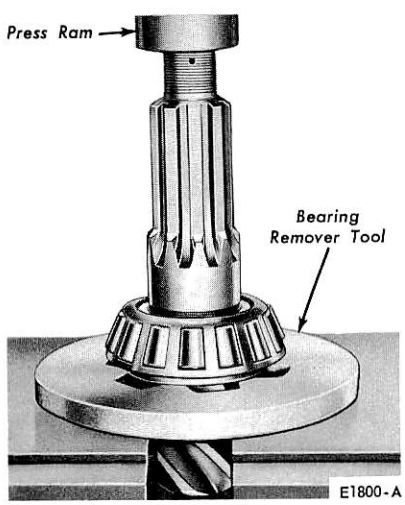

FIG. 10 Removing Pinion Rear Bearing Cone

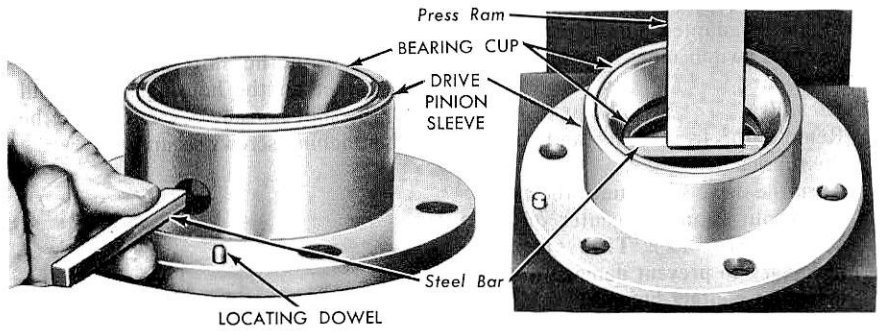

FIG. 11 Removing or Installing Pinion Bearing Cup

12. Install the four differential pinions and thrust washers on the differential spider, then place the spider in the differential case.

Place the right side gear and thrust washer on the differential pinions.

13. Place the right half of the differential case in position over the differential spider, then install the differential case bolts. Tighten them to the specified torque.
14. Place the differential assembly on the bench, and insert the four planetary gear pins in the holes in the differential case (Fig. 7).
15. Place the four planetary gears in position on the planetary gear pins. Position the high speed clutch plate on the planetary gear pins with the chamfered teeth facing the planetary gears. Tap the plate in place with a brass hammer.
16. Place the right gear support case in a vise with the bearing side facing downward. Position the gear support thrust washer in the case.
17. Place the differential assembly in the gear support case with the planetary end facing upward. Place the ring gear over the differential assembly, with the teeth on the ring gear facing downward, and mesh the planetary gears with the internal teeth on the ring gear.
18. Line up the bolt holes in the ring gear with the bolt holes in the gear support case. Place the oil collector drum (if so equipped) on the ring gear with the open side facing the gear. Prior to installing collector drum (ribbed type carriers only) bend tangs slightly to provide tension between drum and support case. Place the notches in the oil collector drum between the bolt holes in the ring gear.
19. Apply oil to each side of the high-speed clutch plate thrust washer, then position the washer on the high-speed clutch plate. Place the left gear support case on the ring gear, and line up the bolt holes in the ring gear and both gear support cases.

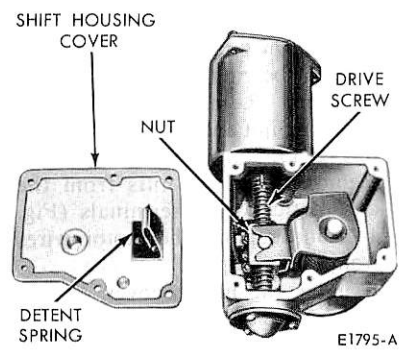

FIG. 12 Drive Screw Nut in Center Position

20. Install the bolts through the gear support cases with the bolt heads against the flange of the right gear support case. Install the nuts on the bolts, and tighten to specifications.
21. Install the differential assembly in the carrier housing and adjust backlash and preload as given in Part 15-01.
22. Check and adjust the gear tooth contact pattern as given in Part 15-01.
23. Install the sliding clutch gear, then position the shift fork on the sliding clutch gear. Install the shift fork shaft through the hole in the differential carrier and into the shift fork. Install the shift fork shaft plugs. Place the shift fork seal and retainer on the shift fork. Shift the axle into the low range.
24. Place the oil distributor and spring in position in the differential carrier. Install the oil distributor plug and gasket, if so equipped.

ELECTRIC SHIFT UNIT

The rear axle shift unit is the only part in the control system which can be

disassembled for repairs. The speedometer adapter, circuit breaker, and control switch must be replaced if failure occurs.

Disassembly

1. Remove the front cover and drain the lubricant.
2. Turn the drive screw until the drive screw nut is in the center of the screw (Fig. 12). **This step is necessary to prevent damage to the drive nut contact bumper.**
3. Pull the shaft out of the torsion spring assembly, then remove the assembly from the housing.
4. Remove the screws and lock washers which attach the drive screw bearing cover to the housing, and remove the cover and gasket.
5. Push down on the screw assembly until the bearing is forced out of the housing. Remove the bearing attaching nut and bearing as shown in Fig. 13.
6. Remove the lock nuts from the automatic switch terminals (Fig. 14), and remove the motor wires from the terminals.
7. Remove the motor cover screws, and remove the motor and the cover gasket from the housing.
8. Remove the jam nuts and fiber washers from the terminals at the rear of the housing. Remove the automatic switch center screw, and lift the switch out of the housing.
9. Mount the torsion spring and lever assembly in a vise as shown in Fig. 15. Turn the spring-winding lever clockwise, and pull outward to disengage the spring from the lever. Reverse this procedure to assemble the spring (Fig. 16).

Assembly

1. Position the automatic switch in the housing, and install the switch attaching screw. Install the fiber washers and jam nuts on the switch terminals at the rear of the housing.
2. Place the motor cover gasket on the housing, and install the motor and cover in the housing. Install the motor cover screws. Position the motor wires on the automatic switch terminals, and install the lock nuts.
3. Place the drive screw assembly in the housing, and install the drive screw bearing and the bearing retainer nut on the drive screw (Fig. 13). Tap the bearing into the bearing seat in the housing. Install the bearing cover gasket and cover on the housing.
4. Center the drive screw nut on the drive screw, making sure the contact bumper on the nut is toward the automatic switch.
5. Position the torsion spring assembly in the housing, then install the shaft.
6. Position the shift housing cover gasket on the housing, and install the shift housing cover. Tighten the attaching screws securely.

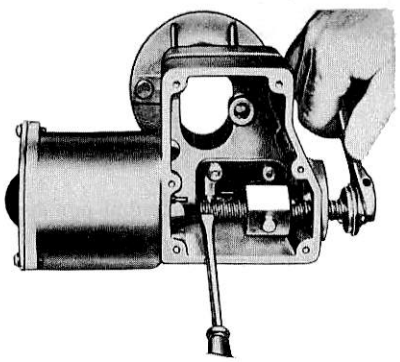

E1796-A

FIG. 13 Removing Drive Screw Bearing

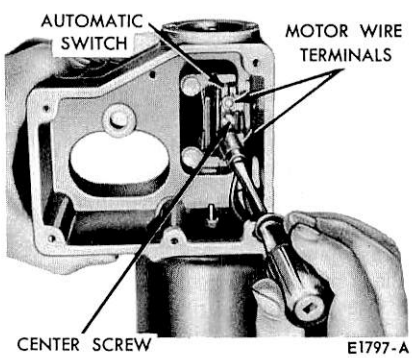

FIG. 14 Removing Motor Wire

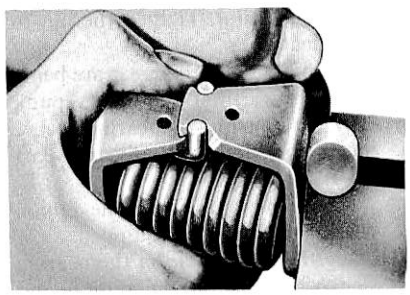

E1798-A

FIG. 15 Disassembly of Torsion Spring

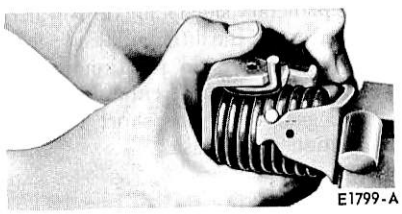

E1799-A

FIG. 16 Assembling Torsion Spring

SPECIFICATIONS

AXLE SHAFT FLANGE STUD NUT TORQUE LIMITS (ALL AXLES)

Thread Size	Torque Limits (Ft-Lbs)		Thread Size	Torque Limits (Ft-Lbs)
7/16-20	35-45		5/8-18	100-120
1/2-20	50-60		3/4-16	130-170 ①

① 160-200 Ft-Lbs on all 22000 pound and 23000 pound capacity axles.

BACKLASH BETWEEN RING GEAR AND PINION

Axle	Backlash (Inch)	Drive Gear Runout (Inch)
All Eaton	0.006-0.016	0.008 Maximum

EATON AXLE DRIVE PINION ADJUSTMENT SPECIFICATIONS

Axle Models		Specifications for Drive Pinion Bearing Preload Adjustment				Drive Pinion Position Adjustment	
		Pinion Bearing Spacer Thickness	Drive Pinion Nut Torque Setting (ft-lbs)	Arbor Press Preload Pressure Setting (tons)	Spring Scale Reading (pounds) To obtain 15 to 35 in-lbs Torque	Pinion Bearing Cage Shim Pack	Depth Gauge Setting
2-SPEED AXLES	13802, 15201	0.530	225-350	4-5	7-16	0.040+0.250	3.6244
	16802, 16244	0.528	325-450	5-6	7-16	0.043	4.125
	17201, 17221	0.638	400-600	7-8	6-14	0.037	4.062
	18201, 18221	0.638	400-600	7-8	6-14	0.037	4.4062
	19221	0.188	600-800	10-11	5-11	0.025	4.7812
PLANETARY DOUBLE REDUCTION AXLES	18301	0.638	400-600	7-8	6-14	0.037	4.4062

2 SPEED AXLES TORQUE SPECIFICATIONS

Torque Settings in ft-lbs unless otherwise specified

Description		Ft-Lbs		Description		Ft-Lbs
Differential Bearing Adjuster Lock	Cap Screw 9/16-12 (Grade 5)	115-125		Drive Pinion	Nut 1-20	220-350
	Cap Screw 5/8-11 (Grade 5)	160-175			Nut 1-1/8-18	320-450
Differential Bearing Cap To Carrier	Cap Screw 3/4-10 (Grade 7)	320-380			Nut 1-1/4-12	400-600
	Cap Screw 5/8-11 (Grade 7)	150-170			Nut 1-1/2-18	500-700
	Cap Screw 11/16-11 (Grade 7)	210-250			Nut 1-3/4-12	550-850
	Cap Screw 13/16-10 (Grade 7)	320-380		Drive Pinion Bearing Cage To Carrier	Cap Screw 9/16-12 (Grade 5)	115-125
	Cap Screw 7/8-9 (Grade 7)	425-500			Cap Screw 9/16-12 (Grade 7)	135-155
Differential Carrier To Axle Housing	Cap Screw 1/2-13 (Grade 5)	75-85			Cap Screw 5/8-11 (Grade 5)	160-175
	Cap Screw 5/8-11 (Grade 5)	160-175			Cap Screw 5/8-11 (Grade 7)	170-190
	Stud Nut 1/2-20 (Grade 8)	110-130		Inspection Cover To Axle Housing	Cap Screw 7/16-14 (Grade 3)	35-50
	Stud Nut 5/8-18 (Grade 8)	220-240			Cap Screw 7/16-14 (Grade 5)	45-55
Differential Case (Axle)	Cap Screw 7/16-14 (Grade 7)	55-65		Shift Units To Carrier (2-Speed)	Stud Nut 7/16-20 (Grade 5)	45-50
	Cap Screw 1/2-13 (Grade 7)	85-105			Stud Nut 7/16-20 (Grade 8)	55-65
	Cap Screw 9/16-12 (Grade 7)	135-155			Stud Nut 1/2-20 (Grade 5)	85-95
Ring Gear Support Case	Bolt/Nut 1/2-13 (Grade 7)	90-105		Cover Plate To Carrier (PDR) (At Shift Unit Opening)	Cap Screw 7/16-14 (Grade 5)	35-45
	Bolt/Nut 1/2-20 (Grade 7)	85-105				
	Bolt/Nut 9/16-18 (Grade 7)	130-150				
	Bolt/Nut 5/8-18 (Grade 7)	190-210		Oil Pickup Through To Carrier	Nylock Screw 1/4-20 (Grade 5)	35-50 in-lbs
	Locknut 5/8-18	165-190				

PART 15-30 Front Driving Axle — 441F Dana

Applies to Bronco Only

COMPONENT INDEX	Page	COMPONENT INDEX	Page
AXLE (COMPLETE)		PINION	
Removal and Installation	30-06	Depth Adjustment	30-10
AXLE SHAFT AND STEERING KNUCKLE		Depth Gauge Check	30-11
Removal and Installation	30-04	PINION OIL SEAL	
DESCRIPTION (AXLE)		Removal and Installation	30-06
DIFFERENTIAL (COMPLETE)			
Cleaning and Inspection	30-09	RING GEAR	
Disassembly and Overhaul	30-07	Back Lash Adjustment	30-13
DIFFERENTIAL BEARINGS		Cleaning and Inspection	30-09
Cleaning and Inspection	30-09		
End Play Measurement	30-10	SPECIFICATIONS	30-14
Preload Adjustment	30-09		

DESCRIPTION

DANA DESIGN FRONT FOUR-WHEEL DRIVE AXLE

A unique front wheel drive axle is provided on the Bronco vehicle. An open yoke is welded to the outer ends of the axle housing. This construction makes for a very strong spindle area. Power to drive the front wheels is transmitted through open Cardan-type universal joints. Ball and socket joints are now used. A new spindle bore seal is used. The seal is installed on the axle shaft rather than being retained in the spindle. Due to its' special design, the seal acts as a slinger as well as a seal (see Figs. 1 and 4).

The differential section of the Dana Model 441F axle is similar in design (but not in size) to the other Dana units used on Ford vehicles (Fig. 2). The differential carrier is integral with the axle housing. Adjustment of the side carrier bearings is accomplished by means of shims placed between the bearings and the differential case. The carrier side bearings are pre-loaded by the squeezing action of the housing. A spreader must be used (Fig. 12) on the axle housing to relieve the tension on the differential bearings and permit removal or installation of the differential. Pinion depth is controlled by a shim pack located to the rear of the pinion bearing. Pinion bearing preload is controlled by variable-size spacers. Where necessary, special service tools have been designed and are available to service the Dana axle used in the Bronco.

The front axle is of the integral carrier-housing, hypoid gear type, in which the centerline of the drive pinion is mounted below the centerline of the ring gear.

The integral pinion gear and shaft is supported by two opposed tapered roller bearings which are assembled in the forward side of the carrier housing. Pinion locating shims, installed between the rear bearing cup and the cup seat, control the drive pinion depth adjustment. The pinion bearing preload is controlled by shims located between the pinion front bearing and the shoulder on the drive pinion shaft.

The differential case assembly is supported by two opposed tapered roller (side) bearings and cups, which are retained in the housing by removable caps. Shims, installed between each differential side bearing and the shoulder on the case, perform three functions: they take up the differential case side clearance: they adjust the backlash between ring gear and pinion: and they establish differential side bearing preload.

A cover on the front of the carrier housing provides access for inspection, removal and installation of the differential assembly and drive pinion. A metal tag, stamped with the gear ratio plus the number of teeth on the ring gear and pinion, is secured to the housing by one of the cover bolts.

Vehicles equipped with limited-slip differential assemblies will have an additional metal tag identification attached to one of the cover bolts.

FRONT WHEEL DRIVE HUB-LOK HUB

The free-running hub is standard equipment for the Dana front axle of the Bronco. It is the internal locking type.

OPERATION

Lock Position

When the transfer case is to be shifted into the position for driving the front axle, the hub lock pointer on the center bar must point to the notch under

the word LOCK on the retaining plate. If the clutch teeth do not engage with the knob turned to this position, the clutch teeth are butted and a slight movement of the wheel in either direction will complete the lock. The front axle will now drive the wheel. Do not operate in four-wheel drive with the hubs disengaged.

Free Running Position

When the transfer case is to be shifted into the position for driving the rear axle only, turn the hub lock pointer on the center bar so it points to the notch under the word FREE on the retaining plate. This will disengage the clutch teeth and thus unlock the wheel hub from the axle shaft. The wheel will now turn free on the axle.

Be certain that the transfer case is shifted into 2-wheel drive position before disengaging the hub lock.

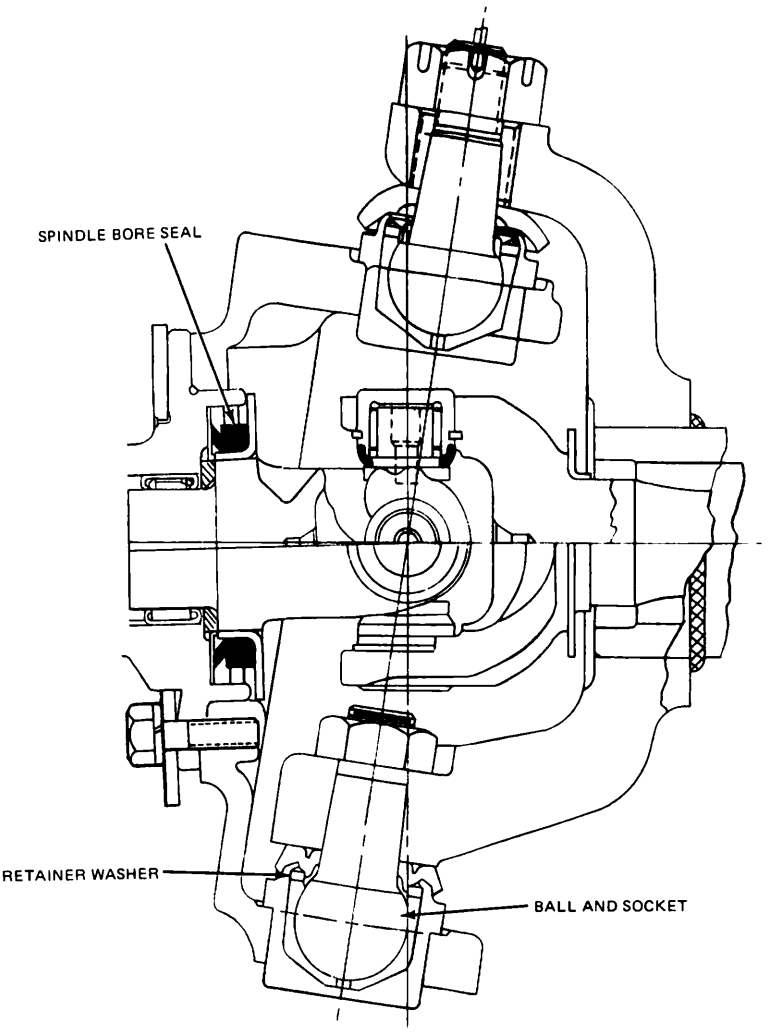

E2259-C

FIG. 1 Ball Joint and Seal Assemblies

REMOVAL AND INSTALLATION

FRONT AXLE SHAFT AND STEERING KNUCKLE

Removal

1. Raise the vehicle on a hoist.
2. Remove the front wheel free running hub; then remove the front wheel hub and drum as an assembly. Refer to Group 11 Part 12, for procedures.
3. Remove the capscrews that attach the brake backing plate and the spindle to the steering knuckle (housing). Remove the brake backing plate and secure it to one side to avoid damaging the brake hose. Carefully remove the spindle.
4. **Pull the axle shaft assembly from the axle housing, working the universal joint through the bore of the steering knuckle (Fig. 3). Use care to prevent damage to the seal. If it is bumped against the knuckle bore it can be damaged.** (At this point, the following parts can be replaced without further disassembly of the axle: axle shaft; universal joint; spindle bore seal and deflector, and spindle bore needle bearing.
5. To remove the steering knucle (housing), disconnect the steering connecting rod end from the steering knuckle.

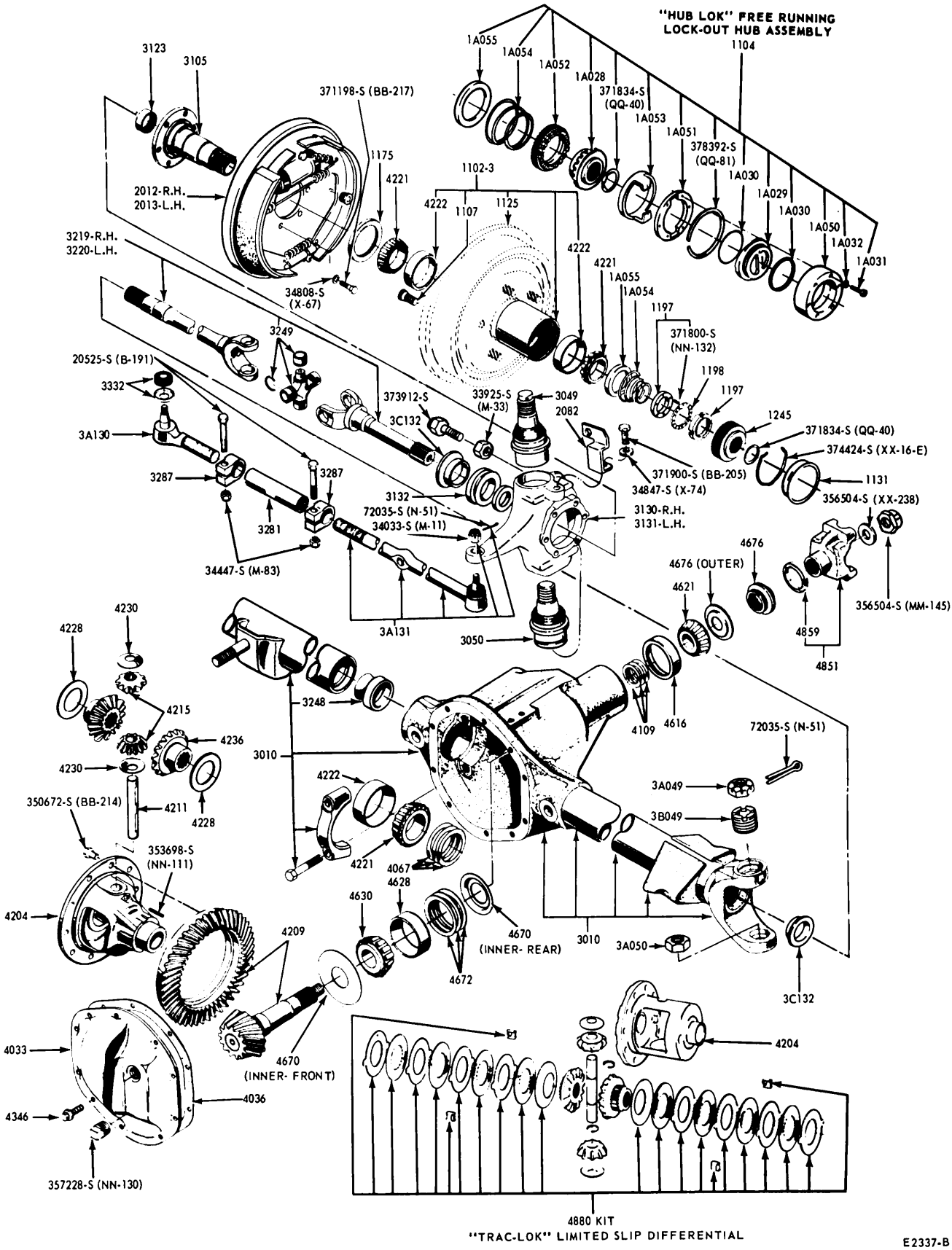

FIG. 2 Front Axle Assembly Complete Exploded View

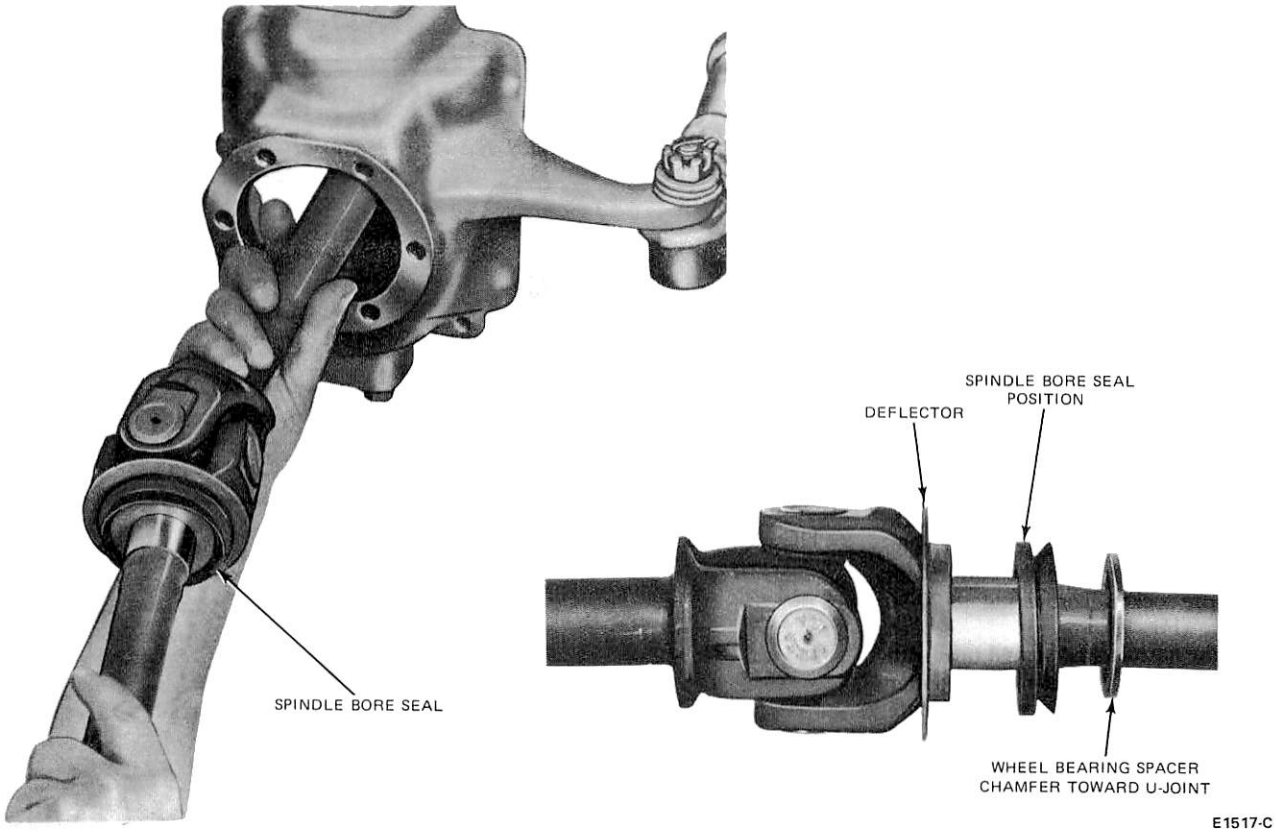

FIG. 3 Removing or Installing Axle Shaft—Typical

6. Remove cotter key from upper ball socket. Loosen the nuts from upper and lower ball sockets (Fig. 4). Discard nut from bottom socket after the knuckle breaks loose from the yoke. This nut is of the torque prevailing design and is not to be reused.
7. Remove knuckle from yoke. Assemble holding plate Tool 41395 and puller Tool 34123 with step nut Tool 27665 as shown. Tighten forcing screw to remove knuckle (Fig. 5).

In the event that the top socket should remain in the yoke, remove by hitting on top of the stud with a rawhide hammer. Discard the socket and remove and discard the adjusting sleeve.

8. Remove bottom socket by removing clamps and puller jaws from the T of the puller Tool 34123 using only the T forcing screw and step plate. Torque forcing screw to push out bottom socket. Discard socket.

Remove adjusting sleeve and discard. Use tool, spanner wrench T71T-3010-G.

9. If the top socket did not remain in the yoke, remove it from the knuckle (Fig. 6).

Installation

1. Place knuckle in vise and assemble bottom socket. Place new socket into knuckle making sure it is not cocked; place the driver over the socket; place forcing screw into driver as shown. Apply torque to screw and force socket into knuckle (Fig. 7).
2. Make sure socket shoulder is seated against knuckle. Use a .0015 feeler gauge between socket and knuckle. Feeler gauge is not to enter at minimum area of contact.
3. Assemble top socket into knuckle. Assemble holding plate onto backing plate screw. Tighten nuts snug. Place new socket into knuckle. Be sure socket is straight and not in a cocked position. Place driver over

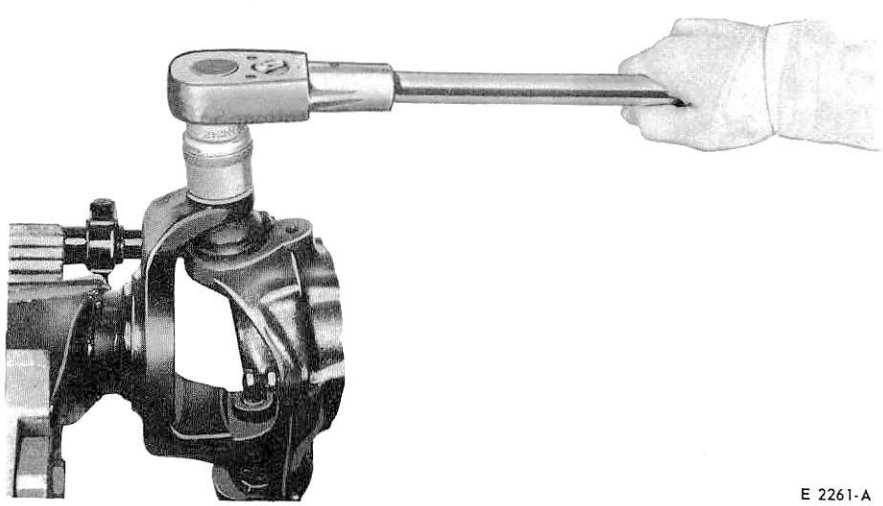

FIG. 4 Nut Removal

socket. Assemble puller tool exactly as shown (Fig. 8).

4. Make sure socket shoulder is seated against knuckle. Use a .0015 feeler gauge between socket and knuckle. Feeler gauge is not to enter at minimum area of contact.
5. Assemble new adjusting sleeve into top of yoke. Leave approximately two threads exposed. This will protect the threads in the yoke.
6. Assemble knuckle with sockets to yoke. Assemble new nut to bottom socket. Tighten nut finger loose. This will serve as a holding device.
7. **Place spanner wrench and step plate over adjusting sleeve. Locate puller exactly as shown, and turn forcing screw. This will pull the knuckle assembly into the yoke. With torque still applied, tighten the bottom nut on the socket. Torque nut to 70-90 ft-lbs (Fig. 9).**

If the bottom stud should turn with the nut, add more torque to the puller forcing screw since this will eliminate the turning of the stud because it should now be seated into the tapered hole of the yoke. Remove puller, step plate and holding plate.

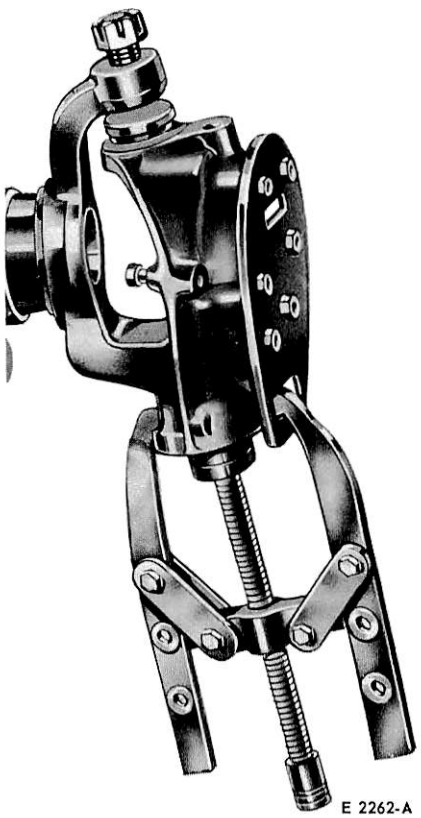

FIG. 5 Knuckle Removal

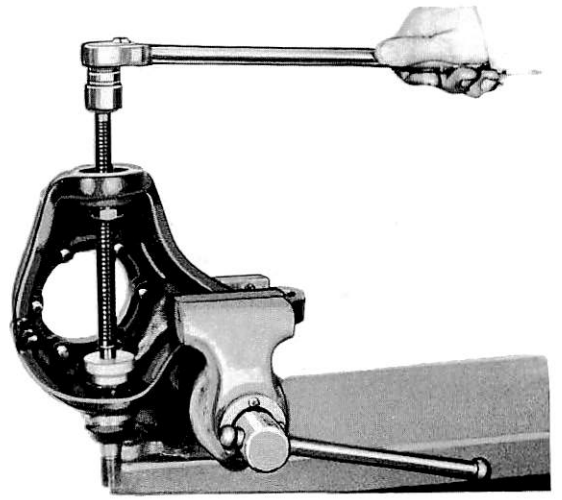

FIG. 6 Top Socket Removal

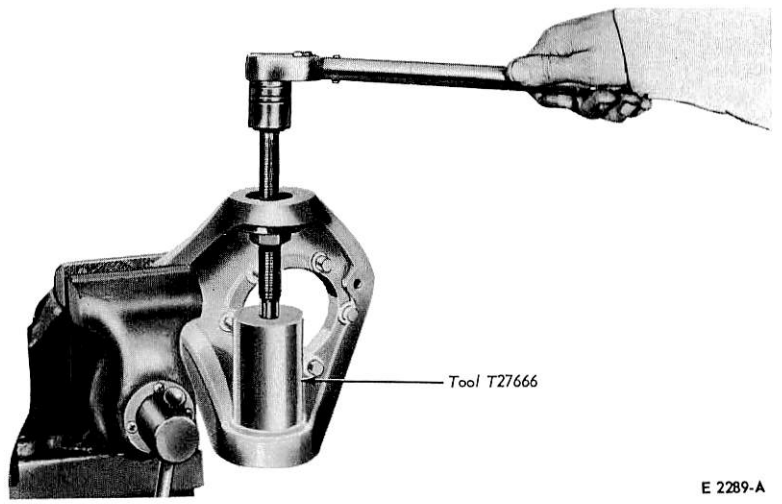

FIG. 7 Bottom Socket Installation

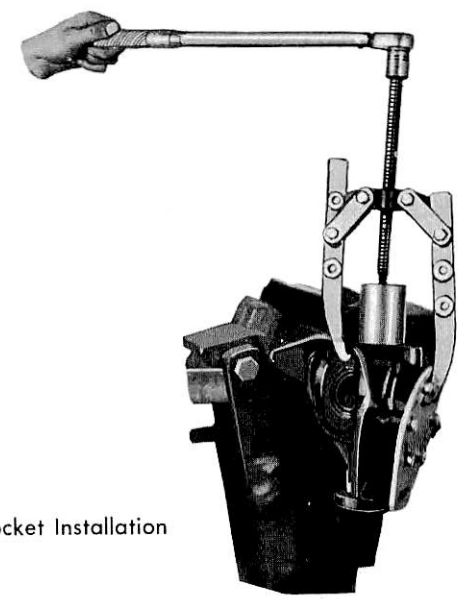

FIG. 8 Top Socket Installation

8. Torque adjusting sleeve to 40 ft-lbs using Tool T-27664. Remove spanner wrench.
9. Assemble top socket nut. Torque to 90 ft-lbs. Line up cotter key hole of stud with the castellation or slot of the nut. Tighten nut when it is being lined up with the hole of the stud. **Do not loosen nut.** Assemble a new cotter key. Before connecting the steering rod (tie rod) to the knuckle, the turning effort should be tested. The spring scale pull at the tie rod hole should not exceed 40 pounds. If the spring scale pull exceeds 40 pounds the ball joints should be replaced.
10. Connect the steering rod to the steering knuckle. Torque to specifications. After connecting the steering rod to the knuckle the turning effort should again be tested. For this test, the turning effort should not exceed 90 pounds.

If it now exceeds 90 pounds, disconnect the steering rod and check both knucles separately to decide which is causing the excess turning effort. If both knuckles now check 40 pounds or less, the excess turning effort is in the tie rod or drag link. Take corrective action; then proceed with the next step.

11. **Make sure seal and deflector are properly installed on the axle shaft assembly (see inset on Fig. 3 for assembly sequence, and position of parts). Assemble seal on shoulder of deflector. Position wheel bearing spacer, and apply a small amount of lubricant C1AZ-19590-B to the exposed face of the spacer; then slide the axle shaft back into the housing using care not to damage the seal.**
12. **Install the backing plate, lubricate the spindle using C1AZ-19590-B lubricant (See Fig. 10) and install the spindle and torque the retaining screws to 30-40 ft-lbs.**
13. **Install the wheel, hub and drum as an assembly. Then install the free running Hub-Lok hubs (refer to Group 11, Part 12).**
14. Fill the axle with the proper grade and quantity of lubricant, as required.

DRIVE PINION OIL SEAL

Removal

The drive pinion oil seal can be replaced without removing the axle assembly from the vehicle. Compounded or synthetic rubber seals do not require soaking. Apply a light coat of axle lubricant to the seal on the shaft contact area.

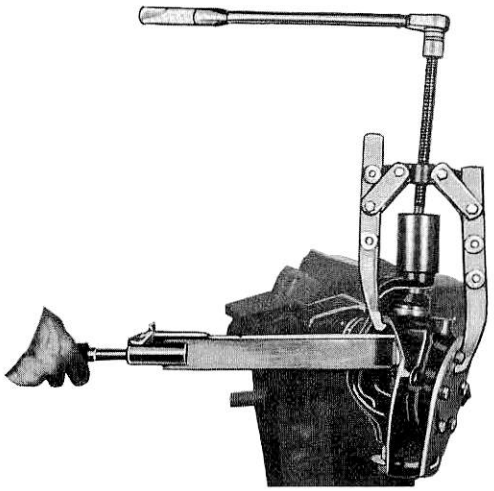

E 2290-A

FIG. 9 Assembly of Knuckle to Yoke

1. Raise the vehicle on a hoist or raise the front end of the vehicle with a jack. Install safety stands under the frame rails and lower the jack or hoist far enough to allow the axle to drop into the rebound position for working clearance.
2. Scribe marks on the companion flanges and U-joints for correct positioning at assembly, and remove the drive shaft.
3. Using Tool-4851-K to hold the pinion companion flange, remove the pinion shaft nut.
4. **Using Tool T53T-4851-A remove the companion flange.**
5. Using Tool-1175-AB, puller, in combination with slide hammer T50T-100-A, remove the pinion oil seal.

Installation

1. **Clean the pinion oil seal seat. Coat the seating edge of the new seal with a small amount of oil resistant sealer. Do not put sealer on the sealing lip. Drive the seal into the housing, using Tool T55P-5676-A.**
2. **Coat the inside of the pinion flange with a small quantity of rear axle lubricant and install the flange on the pinion shaft, using Tool-4858-E.**
3. Install the pinion attaching nut on the pinion shaft and torque it to 200-220 ft-lb.
4. Position the drive shaft in the original location, matching the previously made scribe marks, and install the attaching parts.
5. Torque the universal joint U-bolt attaching nuts to 15-20 ft-lb.
6. Raise the vehicle, remove the safety stands and then lower the vehicle to road position. Check the level of axle lubricant and add the specified lubriant as necessary.

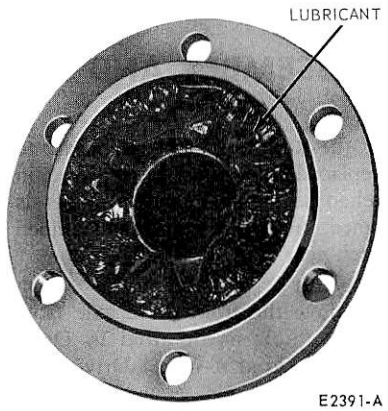

E2391-A

FIG. 10 Spindle Lubrication

DANA FOUR-WHEEL DRIVE FRONT AXLE

Removal

1. Raise the vehicle on a hoist or jack and install safety stands under the radius arm brackets.
2. Follow the procedure detailed in Front Axle Shaft and Steering Knuckle Removal and remove the front wheels, tires, brake drums, brake backing plates, spindles and axle shaft.
3. Remove the hydraulic brake line brackets from each end of the axle without breaking the hydraulic connection. Disengage the hydraulic lines from the axle clips. Tie the lines to the frame to keep them out of the working area.
4. Disconnect the steering tie rod at the knuckle connecting rod ends and tie it out of the working area.

Disconnect the axle stabilizer bar.

5. Disconnect the front drive shaft at the pinion companion flange and universal joint. Secure the drive shaft out of the working area.
6. Lower the vehicle onto the safety stands and place a jack under the axle to support it while disconnecting it from the radius arms.
7. Each radius arm and cap is numbered from 1 through 100 for proper assembly, since they are manufactured as matched pairs. Remove the bolts attaching the radius arms to the radius arm caps. Remove the rubber insulators and roll the axle from under the vehicle, using the jack positioned in Step 6, above.

Installation

1. Position the front drive axle under the vehicle, using a floor jack, and install the radius arms, insulators and caps to the axle. The numbers enscribed on cap and arm should agree and be matched together. Torque the attaching bolts to specifications, tightening them diagonally in pairs.
2. Raise the vehicle to working height and install the drive shaft to the pinion companion flange at the universal joint. Torque the universal joint U-bolt nuts to specifications.
3. Connect the axle stabilizer bar. Connect the steering tie rod to the steering knuckle by means of the steering connecting rod ends. Torque the attaching nuts to specifications and install cotter pins.
4. Follow the procedure detailed in Front Axle Shaft and Steering Knuckle Installation and install the axle shafts, spindles and brake backing plates.
5. Position the hydraulic brake lines and brackets and install the retaining clips.
6. Install the front brake drums, wheels and tires. Adjust the front wheel bearings to specifications. Install the dust cap or locking hub cap and the wheel cover on each front wheel.
7. Lower the vehicle to running position and fill the axle housing with the specified

DISASSEMBLY AND ASSEMBLY

If the Ring Gear and Pinion are to be replaced, they must be replaced in matched sets. When new gear set is obtained, check the markings stamped on each gear (Fig. 11).

Disassembly

1. Remove the front drive axle from the vehicle as detailed in Dana Design Front 4-Wheel Drive Axle Removal.
2. Clean around the differential housing cover, and remove it. Discard the cover gasket. Remove the differential bearing caps.
3. Install the housing spreader and adapter (Fig. 12) making sure the tool hold-down clamp screws are tight. Spread the housing until the differential assembly can be forced out with a small pry bar. Do not spread the housing more than 0.020 inch to remove the differential assembly. Loosen the spreader thread immediately after lifting out the differential assembly to prevent springing the housing.
4. If the differential bearings are to be removed, refer to Specifications for the proper tool.
   A shim pack will be found behind each differential bearing cone. These shim packs control differential bearing preload and pinion and ring gear backlash. When the differential bearing cones are removed, these shim packs are usually damaged by the puller jaws and should be replaced with new shims.

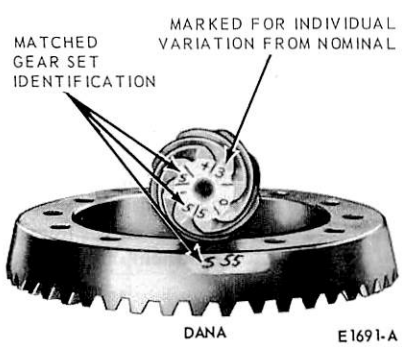

FIG. 11 Pinion and Ring Gear Markings—Dana

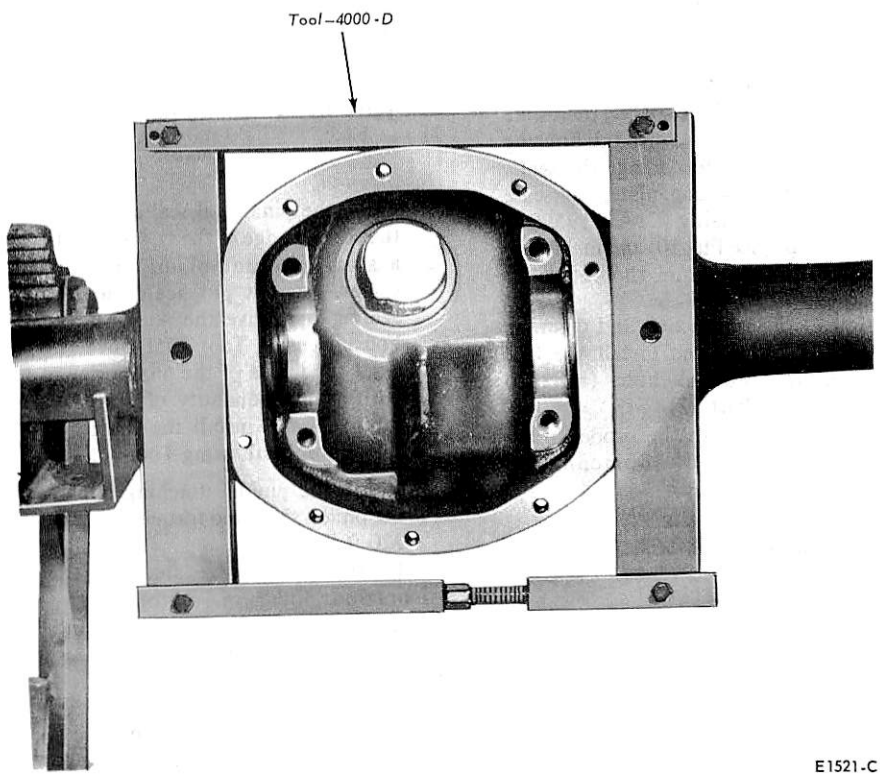

FIG. 12 Spreading Differential Housing

Measure each shim pack with a micrometer, shim by shim, and write down the total thickness and location of each pack.

5. Remove the ring gear from the differential case. With 2 screwdrivers remove differential pinion shaft locking rings. Remove the side gears and thrust washers. Steps 6, through 15 apply to limited slip (Trac-Lok) gear sets only. If working on a conventional differential, skip these steps.
6. To remove and install side gears, washers and clutch packs during disassembly and assembly requires special procedures and tooling. Use Kit T72L-4205-B (part of the 1972 Essential Kit, TKIT-1972, and also available separately). With this tooling it is necessary to use an appropriate step plate from the 1971 essential tool kit.

An axle shaft placed in a vise with the splines extending above the jaws of the vise not more than three inches, makes an excellent holding fixture after the case has been removed from the housing.

Position the Step Plate into the bottom side gear (Fig. 13). Apply grease to the centering hole of the Step Plate.

7. Position the Gear Rotating Tool into the top side gear (Fig. 14).
8. Lubricate the threads of the Forcing Screw and thread it into the Gear Rotating Tool. Guide the Forcing Screw into the Step Plate (Fig. 15).
9. Torque the Forcing Screw tight. This will move the side gears away from the differential pinion gears, and relieve the normal loaded condition. Using a piece of 0.030 thick shim or gauge stock, push out the differential spherical washers (Fig. 16).
10. Momentarily, loosen the Forcing Screw. **This step is very important to relieve the pressure of the clutch pack.**
11. Retighten the Forcing Screw until a very slight movement of the differential pinion gears is seen.
12. Slide the pawl of the Gear Rotating Tool (Fig. 17) between two of the side gear teeth. Pull the handle so the top side gear will rotate and also allow the differential pinion gears to rotate. Continue this until the differential pinion gears can be removed through the large openings in the case. When attempting to rotate the side gear, some tightening or loosening of the Forcing Screw will probably be required to permit the gear movement.
13. Retain the top side gear and clutch pack in the case with the hand and remove the Forcing Screw. Continue to hold the side gear and clutch pack and remove the Gear Rotating Tool (Fig. 18). Remove the top side gear and clutch pack. Keep the stack of plates and discs in exact order.
14. Turn the case so the flange, or ring gear side is up. As this is done, ease the Step Plate, side gear and clutch pack out of the case.
15. Remove the retainer clips from both clutch packs to allow separation of the discs and plates for cleaning and inspection. **Be sure to keep them in exact order** (Fig. 19).
16. Seals are installed in the axle housing near the differential bearings. If these seals are not to be replaced, pry them from the housing with a heavy screwdriver or similar tool.



FIG. 13 Step Plate in Position

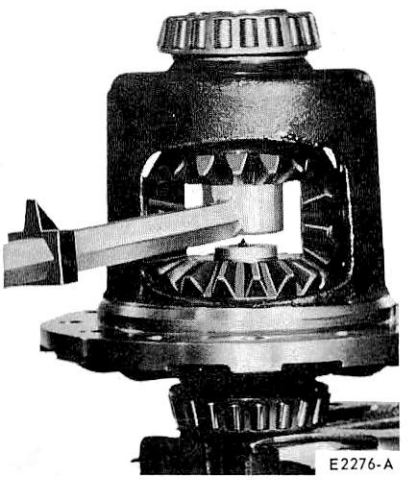

FIG. 14 Gear Rotating Tool in Position

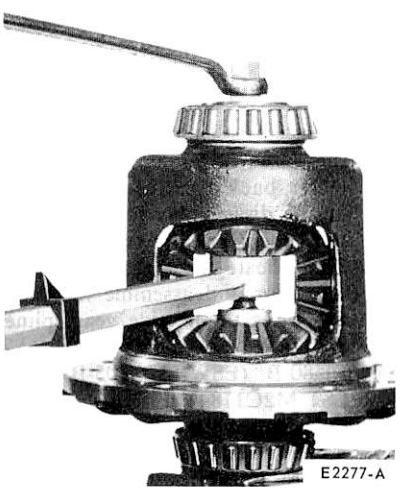

FIG. 15 Guiding the Forcing Screw into the Step Plate



FIG. 16 Removing Spherical Washers

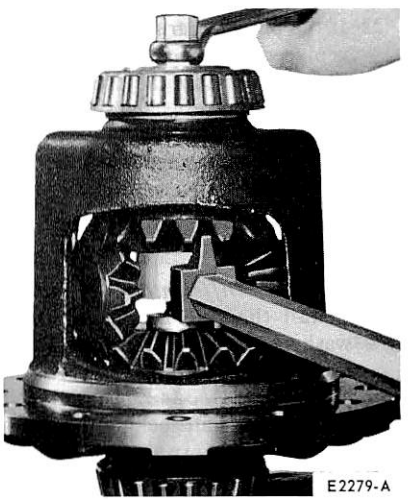

FIG. 17 Rotating Tool Pawl in Position

Use Tool T66T-3002-A to replace both seals at once. Position the seals in the respective bores and insert the tool, as shown in Fig. 20. Use a wrench to expand the tool until the seals are fully seated in the bores.

17. Hold the pinion shaft flange and remove the pinion shaft nut. Remove the flange.
18. Tap the pinion shaft out of the front bearing cone, using a rawhide mallet.
19. Remove the pinion bearing preload shim pack from the pinion shaft or from the housing.
20. If the pinion rear bearing cone is to be replaced, use the type of tool shown in Fig. 21.
21. Attach a side hammer puller tool to the pinion outer bearing cone and remove the bearing cone, slinger, and oil seal from the housing.
22. If the pinion bearing cups are to be replaced or the rear bearing cup removed for shim adjustment, refer to Specifications for the proper remover tools.
23. Clean and inspect the axle parts as detailed in Part 15-01.

ASSEMBLY

Conventional Differential

1. Install the side gears and thrust washers, pinions and thrust washers, and the pinion shaft in the differential case. Install the differential shaft locking pin.
2. Install the ring gear on the differential case, and torque the attaching bolts to specifications.

Trac-Lok Differential

1. Install the side gears and thrust washers. To do this, whether the original plates and discs or new ones are used, assemble them in exactly the same order as the originals. Refer back to illustrations used during disassembly for guidance in subsequent assembly operations.
2. Prelubricate the thrust face of the side gear and assemble the plates and discs to the side gear splines, prelubing each part with D2AZ-19580-B (ESW-M2C105-B) with EST-M2C118-A Friction Modifier Lubricant, both stacks.
3. Assemble the retainer clips to the ears of the plates. Make sure both clips are completely assembled or seated onto the ears of the plates. With the differential case positioned as shown, assemble the clutch pack and side gear into the case. Make sure the clutch pack stays assembled to the side gear splines, and that the retainer clips are completely seated into the pockets of the case. To prevent pack from falling out of the case, it will be necessary to hold them in place by hand while repositioning case on bench.
4. Reposition the case on the bench and assemble the step plate into the side gear. Apply a small amount of grease into the centering hole of the step plate.
5. Assemble the other clutch pack and side gear. Make sure the clutch pack stays assembled to the side gear

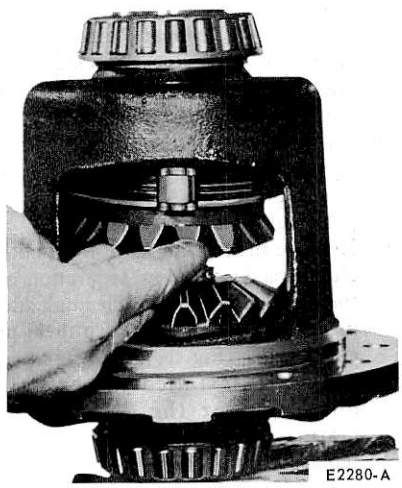

FIG. 18 Holding Clutch Pack

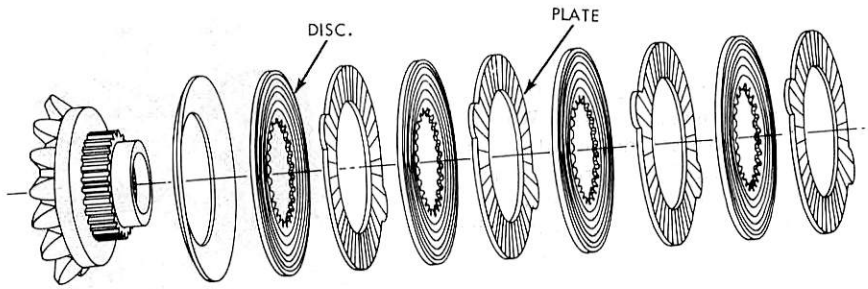

FIG. 19 Plates and Discs to Side Gear Exploded View

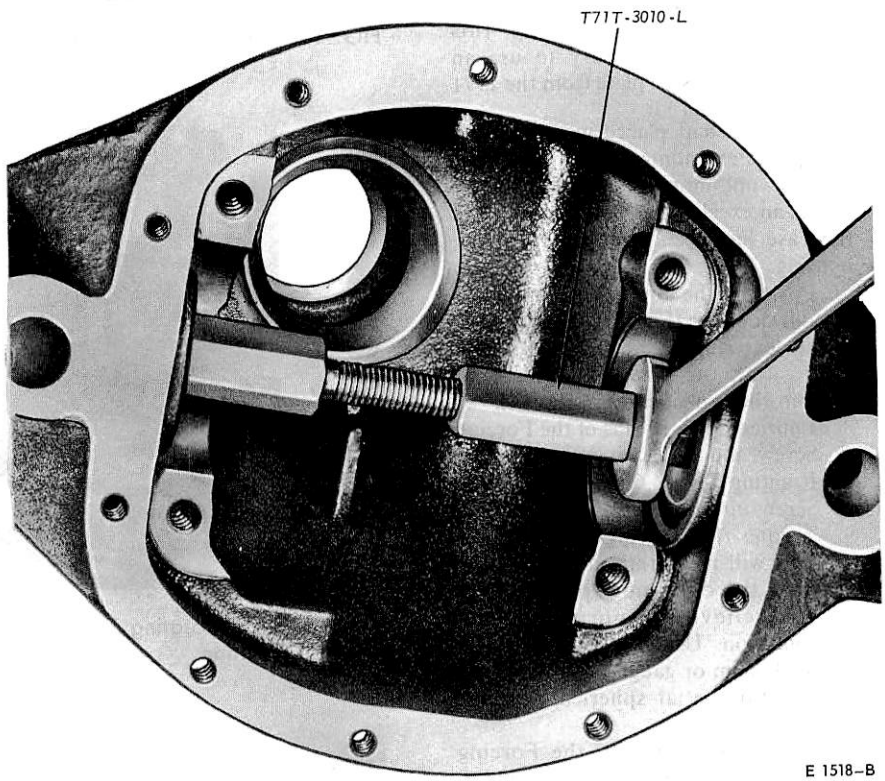

FIG. 20 Installing Inner Seals

splines, and that the retainer clips are completely seated into the pockets of the case.

6. Position the gear rotating tool into the top side gear and keep the side gear and rotating tool in position by holding with hand. Insert the forcing screw down through the top of case, and thread into the rotating tool until forcing screw contacts step plate.
7. With tools assembled to the case, position case onto the axle shaft (as a holding fixture) by aligning the splines of the side gear with those of the shaft.
8. Position both differential pinion gears opposite one another through the openings in the case. Be sure the holes of the gears are lined up with each other. Hold gears in place by hand.

Tighten forcing screw so that the side gears will move away from the differential pinion gears and relieve the loaded condition.

9. While holding the differential pinion gears in place, insert the pawl of the rotating tool between two of the side gear teeth. Pull on handle so that the top side gear will rotate and allow the differential pinion gears to rotate and enter into the case.

As mentioned under disassembly, it will probably be necessary to adjust the forcing screw by very slightly loosening or tightening until the required load is applied to allow the side gear and differential pinion gears to rotate.

10. Pull on tool until the handle hits the gear. Remove the pawl from between the gear teeth and reposition the handle and the pawl. Repeat the same operation until the holes of both differential pinion gears are lined up exactly with those of the case.

Prelubricate both sides of the pinion spherical washers with the specified lubricant.

11. Apply torque to the forcing screw to allow clearance to assemble the spherical washers.

Assemble washers into the case. Use a very small screwdriver to push washers into place. **Be sure the holes of the washers and gears are lined up exactly with those of the case.** Remove the forcing screw, rotating tool, and step plate.

Install the pinion shaft in the differential case. Install the differential shaft locking pin.

12. Install the ring gear on the differential case, and torque the attaching bolts to specifications.

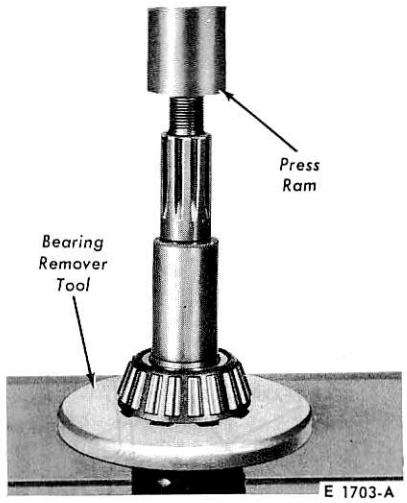

FIG. 21 Removing Pinion Bearing

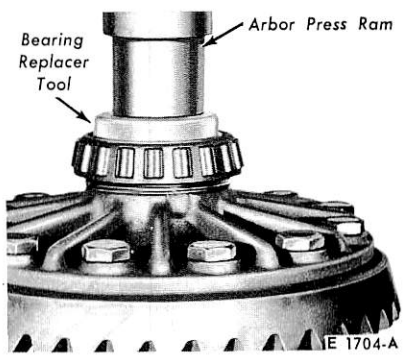

FIG. 22 Installing Differential Bearing

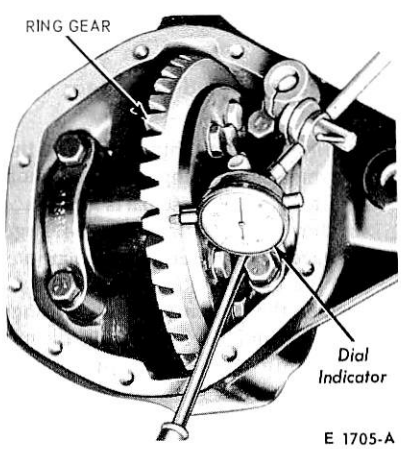

FIG. 23 Checking Differential End Play

Differential Bearing End Play Measurement— Conventional and Limited—Slip Differentials

1. Press the differential bearings onto the case without sims (Fig. 22). The bearings must bottom on the case shoulder.
2. Place the cups on the differential bearings and install the assembly in the housing. Install the bearing caps and tighten the cap bolts just enough to keep the bearing caps in place.
3. Mount a dial indicator on the axle housing, with the indicator button against the ring gear (Fig. 23).
4. Pry the differential assembly away from the dial indicator, using a screwdriver between the bearing cup and the case, and set the indicator at zero. Pry the differential assembly toward the indicator and note the indicator reading. This reading indicates the amount of shims needed behind the differential side bearings to take up the total clearance between the differential bearing cups and the case. Record this reading.
5. Remove the bearing caps and lift the differential assembly from the housing. Do not install shims under the differential bearings at this time. The total-clearance reading obtained in the above step must be integrated with a second reading to be obtained after the pinion has been installed and pinion depth has been adjusted. The two readings are used to calculate the shim thickness necessary to obtain proper differential bearing pre-load and ring gear back-lash, as well as end play adjustment.

Drive Pinion Installation and Depth Adjustment

As in all axles, two separate adjustments affect pinion and ring gear tooth contact, they are pinion depth (location) and backlash. On Dana axles, the pinion locating shim pack is installed between the pinion rear bearing cup and the carrier housing (Fig. 24). Therefore, adding shims moves the pinion toward the ring gear; removing shims moves the pinion away from the ring gear.

Estimated Shim Pack. If the original gear set is being installed, install the pinion with the original shim pack and check the pinion location with a depth gauge.

If the ring gear and pinion is being replaced, note that the original factory installed pinion locating shim is of the correct thickness to adjust for individual variations in both the carrier housing dimension and in the original gear set dimension. Therefore, to estimate the correct shim thickness for the new gear set to be installed, follow these steps:

1. Measure the thickness of the original pinion locating shim with a micrometer.
2. Note the shim adjustment number on both the old pinion and the new pinion. Each pinion gear is marked with an adjustment number.
3. Refer to specifications for the correct amount of shim thickness change. The amount that is shown under the new pinion shim adjustment number and in line with the old pinion number is the amount of change that should be made to the original shim thickness.

If the old pinion is marked 4, for example, and the new pinion is marked -2, the table indicates that 0.006 inch of shim stock should be added to the original shim pack.

If the original shim pack was lost or if a new axle housing is being installed, substitute a nominal 0.030 inch shim for the original, and repeat the foregoing steps for a trial build-up. If any further shim change is necessary, it will be indicated in the depth gauge check.

A new ring gear and pinion should always be installed in an axle as a matched set (never separately). Be sure that the same matching number appears on both the drive pinion and the ring gear.

Install the pinion with the estimated shim pack, and check the pinion location with a depth gauge as outlined in the following procedure.

Depth Gauge Check

1. Install the pinion locating shim pack and pinion bearing cups. Refer to Specifications for the proper tool.
2. Press the rear bearing onto the pinion shaft. Refer to Specifications for the proper tool.
3. Position the pinion and rear bearing assembly by inserting it from the inner side of the axle housing. Position the front bearing cone (without preload shim pack) and the universal joint flange on the pinion shaft. Press all these parts into place under a press or with a flange replacer tool. Refer to Specifications for the proper tool.
4. Install the pinion shaft flat washer and nut, and carefully torque the nut until pinion bearing preload is between 20-40 in-lbs. As the nut is torqued, rotate the pinion shaft in both directions to set the bearing rollers.
5. Check the pinion bearing preload (Fig. 25). Disregard the torque required to start the pinion rotating.

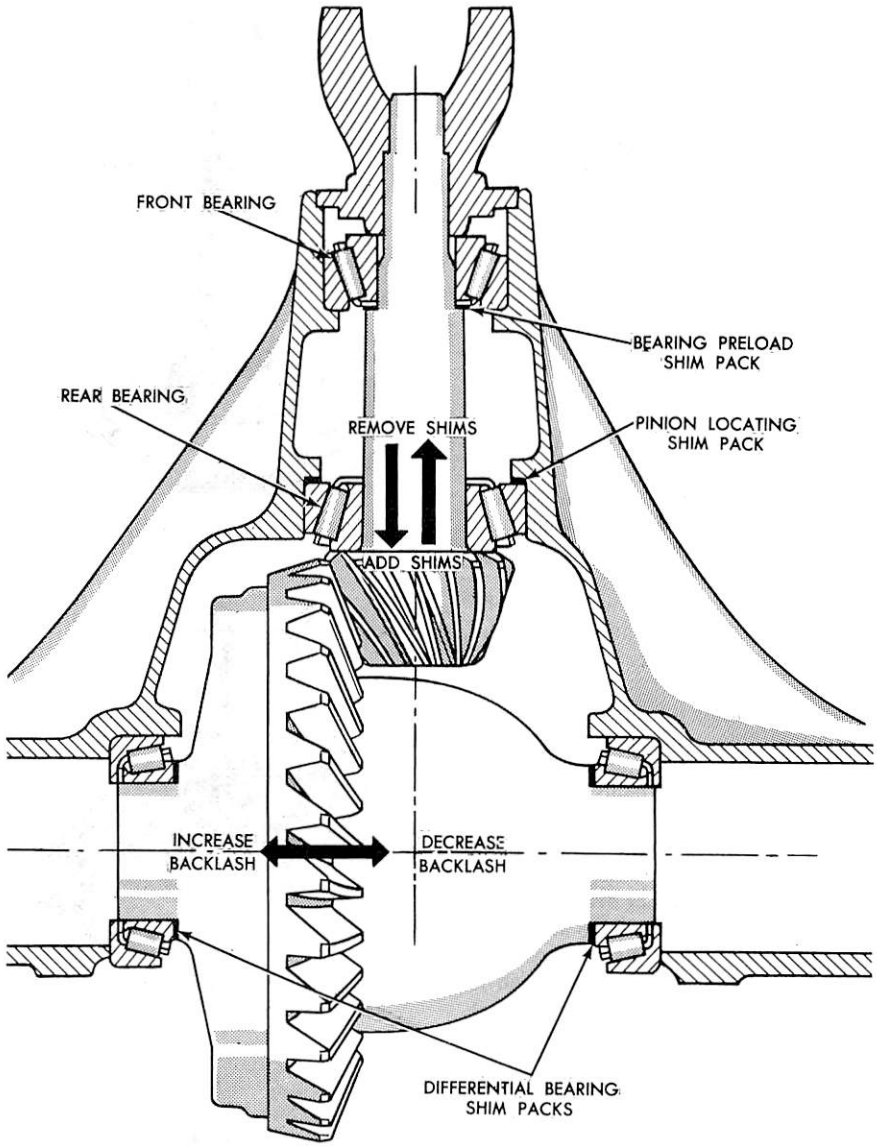

FIG. 24 Pinion and Ring Gear Tooth Contact

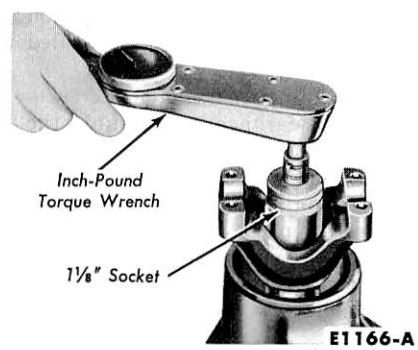

FIG. 25 Checking Pinion Bearing Pre-Load

The specified torque of 10 to 30 in-lbs refers to the torque required to keep the pinion rotating after it has been started.

With the pinion installed in the housing and the bearing preload within limits, check the depth setting (actual assembly dimension) with the gauge shown in Fig. 26.

Place the gauge shaft and discs in the differential bearing pockets and securely tighten the bearing caps.

6. Attach the dial indicator to its holder and place it on the gauge block. Place the gauge block squarely on the pinion gear and squarely against the gauge shaft.
7. With the indicator button resting on the flat of the gauge block, set the dial face to read zero. Swing the indicator (Fig. 26) to the highest point on the gauge shaft and note the reading at the highest point. The highest point on the gauge shaft is the point of highest indicator reading while the indicator hand is moving clockwise. When the hand reverses and starts moving counterclockwise, the highest point has been passed.

The indicator reading at the highest point on the gauge shaft shows the actual assembly dimension with reference to the nominal assembly dimensions for this axle is 2.625 inches. The nominal dimension is the distance from the ground surface on the pinion gear rear face to the center line of the ring gear. The highest point on the installed gauge shaft is exactly 1/2 inch higher than the ring gear centerline. The installed gauge block height is exactly 1/2 inch greater than the nominal assembly dimensions for the axle.

When the gauge block is resting on a zero-marked pinion installed exactly at the nominal assembly dimension, the top of the gauge block and the highest point on the gauge shaft are exactly the same distance from the pinion gear rear face. In this case, the indictor, having been set at zero on the gauge block, will read zero when moved to the highest point on the gauge shaft. A plus or minus reading on the indicator at the highest point on the gauge shaft indicates, therefore, that the actual assembly dimension is not the same as the nominal assembly dimension. The plus and minus indicator readings are translated directly into plus and minus variations from the nominal assembly dimension.

The indicator reading at the highest point on the gauge shaft must correspond with the pinion gear marking, if the actual assembly dimension is correct. For example, a pinion marked minus 3 is installed at the proper depth when the indicator reads minus 3 at the highest point on the gauge shaft. Likewise, a pinion marked plus 3 is installed at the proper depth when the indicator reads plus 3 at the highest point on the gauge shaft.

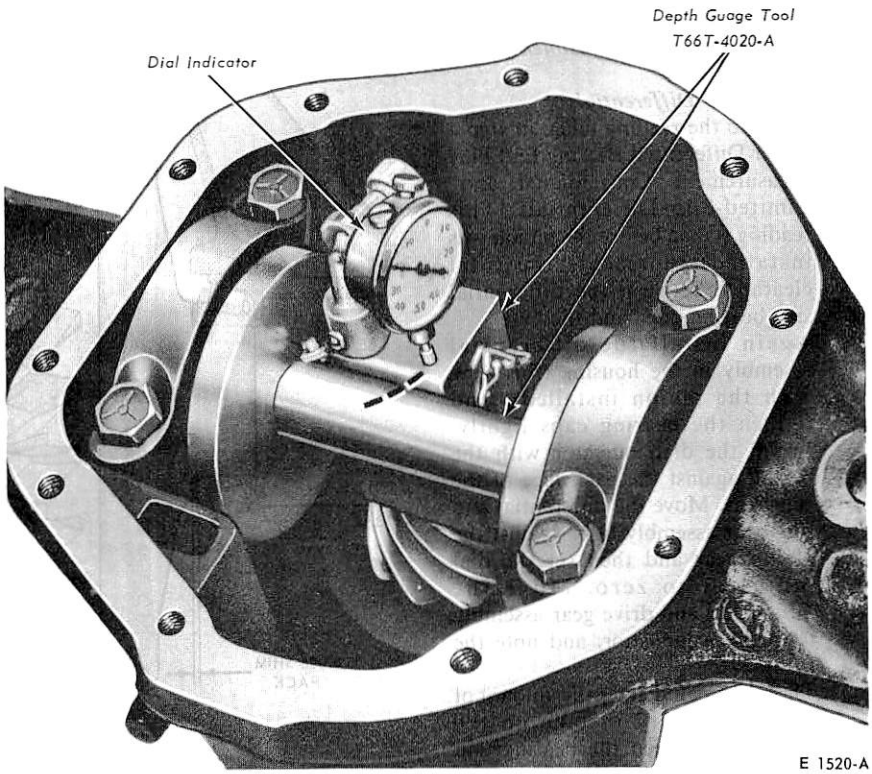

FIG. 26 Checking Pinion Depth

A plus reading (clockwise from zero) at the highest point on the gauge shaft with a zero-marked pinion, means that the actual assembly dimension is too great in the amount of the plus reading. To correct, add shims in thousandths of an inch that correspond to the plus reading. For example, an indicator reading of plus 10 with a zero marked pinion means that 0.010 inch in shims must be added to the rear bearing cup pack. The addition of shims will move the pinion gear closer to the ring gear and decrease the actual assembly dimension (Fig. 24).

Likewise, a minus reading (counterclockwise from zero) at the highest point on the gauge shaft with a zero marked pinion, means that the actual assembly dimension is deficient in the amount of the minus (-) reading. To correct, remove shims in thousandths of an inch equal to the minus reading. This will increase the actual assembly dimension.

Whenever the pinion rear bearing cup shim pack is changed, install the pinion and recheck the pinion depth.

8. **After the pinion depth has been adjusted and checked, remove the universal joint flange and front bearing. Add or subtract from the original front pinion bearing preload shim pack, the same amount in thousandths of an inch that was added or subtracted from the shim pack behind the rear bearing cup (Fig. 24). Install the bearing preload shim pack, the outer bearing, the universal joint flange, washer and nut. Torque the flange nut to 200-220 ft-lbs on all models.**
9. Check the pinion bearing preload (Fig. 25). The preload should be 20-40 inch-pounds. Add shims to decrease preload and remove shims to increase preload.

If the original bearing preload shim pack has been lost or there is reason to believe that it was not correct, install a 0.065-inch shim pack for a trial build-up. Check the pinion bearing preload and adjust as necessary to obtain 20-40 in-lbs preload on new bearings or 10-25 in-lbs on used bearings.

10. When the pinion bearing preload is correct, remove the universal joint flange. Install the oil slinger on the outer side of the front pinion bearing

and install the oil seal. Refer to Fig. 20 for the proper seal installer tool.

Differential Bearing Pre-Load and Ring Gear Backlash Adjustment—Conventional and Limited—Slip Differentials

1. Refer to the reading taken in step 4 under Differential Bearing End Play Measurement Conventional and Limited-Slip Differentials. This reading (taken before the pinion was installed) represents the total clearance between the differential side bearing cups and the case.
2. Again install the differential assembly in the housing (this time with the pinion installed), and tighten the bearing caps lightly. Install the dial indicator with the button against the back face of the ring gear. Move the differential and ring gear assembly tight against the pinion gear and then set the dial indicator to zero. Move the differential and drive gear assembly toward the indicator, and note the reading.
3. This reading indicates the amount of shims necessary to take up the clearance between the bearing cup and the case at the ring gear side of the differential assembly. Subtract this reading from the previously recorded total reading to obtain the amount of shims necessary to take up the clearance between the bearing cup and the case at the pinion side of the differential. Increase this pinion-side shim pack by an additional 0.015 to 0.020 inch in order to provide correct bearing preload and backlash. EXAMPLE (Fig. 27): Total Clearance previously recorded.....0.070 inch Less reading in foregoing step 2 (Amount of shims necessary to take up clearance at ring gear side) .....0.038 inch Shims necessary to take up clearance at pinion side.....0.032 inch Plus 0.015 inch shims for preload and backlash. Total amount of shims at pinion side..... 0.047 inch.

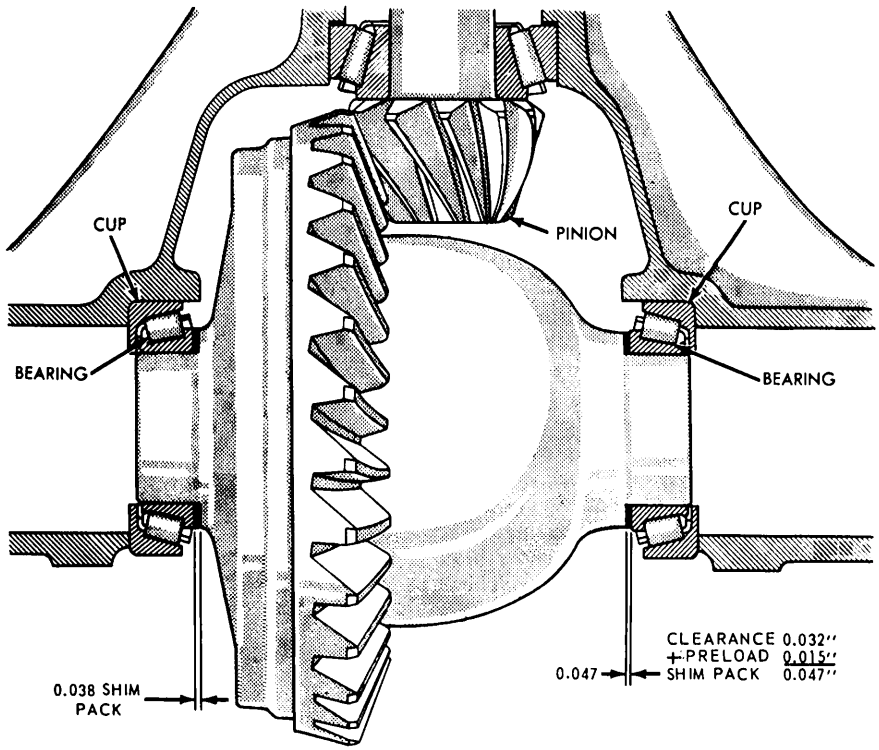

E 1716-A

FIG. 27 Differential Bearing Pre-Load and Ring Gear Backlash

4. Remove the bearing caps, and lift the differential assembly from the housing. Remove the differential side bearings, and install the proper amount of shims on each side of the differential case. Press the side bearings onto the case until they are firmly seated against the shims.
5. Install the housing spreader, spread the housing not more than 0.020 inch, and install the differential assembly. Install the bearing caps, and remove the spreader. Install and torque the cap bolts to specifications.
6. Install a dial indicator to check the backlash at four equally spaced points around the ring gear. The backlash must be held to 0.004-0.009 inch and cannot vary more than 0.002 inch between positions checked. If the backlash does not fall within these specifications, change the shim packs behind both differential side bearings, as required.
7. Check gear tooth contact pattern as given in Fig. 3 in Part 15-01.
8. Position a new gasket on the rear face of the axle housing, and install the rear cover and ratio identification tag. Torque the cap screws to 30-40 ft-lbs.
9. Install the axle in the vehicle according to the instructions under Removal and Installation.

DRIVE PINION ADJUSTING SHIM THICKNESS CHANGES DANA

Old Pinion Marking	New Pinion Marking								
	.4	.3	.2	.1	0	+1	+2	+3	+4
+4	+0.008	+0.007	+0.006	+0.005	+0.004	+0.003	+0.002	+0.001	0
+3	+0.007	+0.006	+0.005	+0.004	+0.003	+0.002	+0.001	0	−0.001
+2	+0.006	+0.005	+0.004	+0.003	+0.002	+0.001	0	−0.001	−0.002
+1	+0.005	+0.004	+0.003	+0.002	+0.001	0	−0.001	−0.002	−0.003
0	+0.004	+0.003	+0.002	+0.001	0	−0.001	−0.002	−0.003	−0.004
−1	+0.003	+0.002	+0.001	0	−0.001	−0.002	−0.003	−0.004	−0.005
−2	+0.002	+0.001	0	−0.001	−0.002	−0.003	−0.004	−0.005	−0.006
−3	+0.001	0	−0.001	−0.002	−0.003	−0.004	−0.005	−0.006	−0.007
−4	0	−0.001	−0.002	−0.003	−0.004	−0.005	−0.006	−0.007	−0.008

DANA AXLE ADJUSTMENTS

Description	Inch	Description	Scale Pull Lbs.
Backlash Between Ring Gear and Pinion	.004-.009	Steering Knuckle Turning Effort – Tie Rod Disconnected (1 Knuckle)	40
Backlash Maximum Variation Between Teeth	0.002		
Pinion Bearing Preload	20-40 in-lbs	Tie Rod Connected (2 Knuckles)	90

DANA AXLE TORQUE LIMITS – (FT-LBS)

Description	Ft-Lbs.	Description	Ft-Lbs.
Pinion Shaft Nut	200-220	Ball Joint Nut – Top	100
Differential Bearing Cap Bolts	70-90	– Bottom	80 ②
Ring Gear Attaching Bolts	45-65	Oil Fillter Plug	40
Cover to Housing Bolts	30-40	U-Joint Bolts	15-20
Spindle Nut to Wheel Hub – Inner	50 ①	Backing Plate and Spindle to Steering Knuckle Retaining Bolts	30-40
– Outer	80-100		

① Torque to 50 ft-lbs, then back off 90 degrees and rotate to closest pin-hole.
② A torque prevailing nut. Do not reuse.

CE2235-D

PART 15-31 Front Driving Axle - 44-7F Dana

Applies To F-100 Only

COMPONENT INDEX	Page	COMPONENT INDEX	Page
AXLE (COMPLETE) Removal and Installation	31-05	DIFFERENTIAL (COMPLETE) Disassembly and Assembly	31-06
AXLE SHAFT AND STEERING KNUCKLE Removal and Insatallation	31-05	PINION OIL SEAL Removal and installation	31-02
DESCRIPTION (AXLE)	31-01	SPECIFICATIONS	31-06

DESCRIPTION

F-100 4-WHEEL DRIVE FRONT AXLES—DANA

A unique front wheel drive axle is provided on the F-100 vehicle. An open yoke is welded to the outer ends of the axle housing. This construction makes for a very strong spindle area. Power to drive the front wheels is transmitted through open Cardan-type universal joints. Ball and socket joints are now used. A new spindle bore seal is used. The seal is installed on the axle shaft rather than being retained in the spindle. Due to its' special design, the seal acts as a slinger as well as a seal (see Figs. 1 and 2).

The differential section of the Dana Model 447F axle is similar in design (but not in size) to the other Dana units used on Ford vehicles (Fig. 3). The differential carrier is integral with the axle housing. Adjustment of the side carrier bearings is accomplished by means of shims placed between the bearings and the differential case. The carrier side bearings are pre-loaded by the squeezing action of the housing. A spreader must be used (Fig. 4) on the axle housing to relieve the tension on the differential bearings and permit removal or installation of the differential. Pinion depth is controlled by a shim pack located to the rear of the pinion bearing. Pinion bearing preload is controlled by variable-size spacers. Where necessary, special service tools have been designed and are available to service the Dana axle used in the F-100 vehicles.

The front axle is of the integral carrier-housing, hypoid gear type, in which the centerline of the drive pinion is mounted below the centerline of the ring gear.

The integral pinion gear and shaft is supported by two opposed tapered roller bearings which are assembled in the forward side of the carrier housing. Pinion locating shims, installed between the rear bearing cup and the cup seat, control the drive pinion depth adjustment. The pinion bearing preload is controlled by shims located between the pinion front bearing and the shoulder on the drive pinion shaft.

The differential case assembly is supported by two opposed tapered roller (side) bearings and cups, which are retained in the housing by removable caps. Shims, installed between each differential side bearing and the shoulder on the case, perform three functions: they take up the differential case side clearance: they adjust the backlash between ring gear and pinion: and they establish differential side bearing preload.

A cover on the front of the carrier housing provides access for inspection, removal and installation of the differential assembly and drive pinion. A metal tag, stamped with the gear ratio plus the number of teeth on the ring gear and pinion, is secured to the housing by one of the cover bolts.

Vehicles equipped with limited-slip differential assemblies will have an additional metal tag identification attached to one of the cover bolts.

FRONT WHEEL DRIVE HUB-LOK HUB

The optional free-running hub available for the Dana front axle is the internal locking type.

OPERATION

Lock Position

When the transfer case is to be shifted into the position for driving the front axle, the hub lock pointer on the center bar must point to the notch under the word LOCK on the retaining plate. If the clutch teeth do not engage with the knob turned to this position, the clutch teeth are butted and a slight movement of the wheel in either direction will complete the lock. The front axle will now drive the wheel. Do not operate in four-wheel drive with the hubs disengaged.

Free Running Position

When the transfer case is to be shifted into the position for driving the rear axle only, turn the hub lock pointer on the center bar so it points to the notch under the word FREE on the retaining plate. This will disengage the clutch teeth and thus unlock the wheel hub from the axle shaft. The wheel will now turn free on the axle.

Be certain that the transfer case is shifted into 2-wheel drive position before disengaging the hub lock.

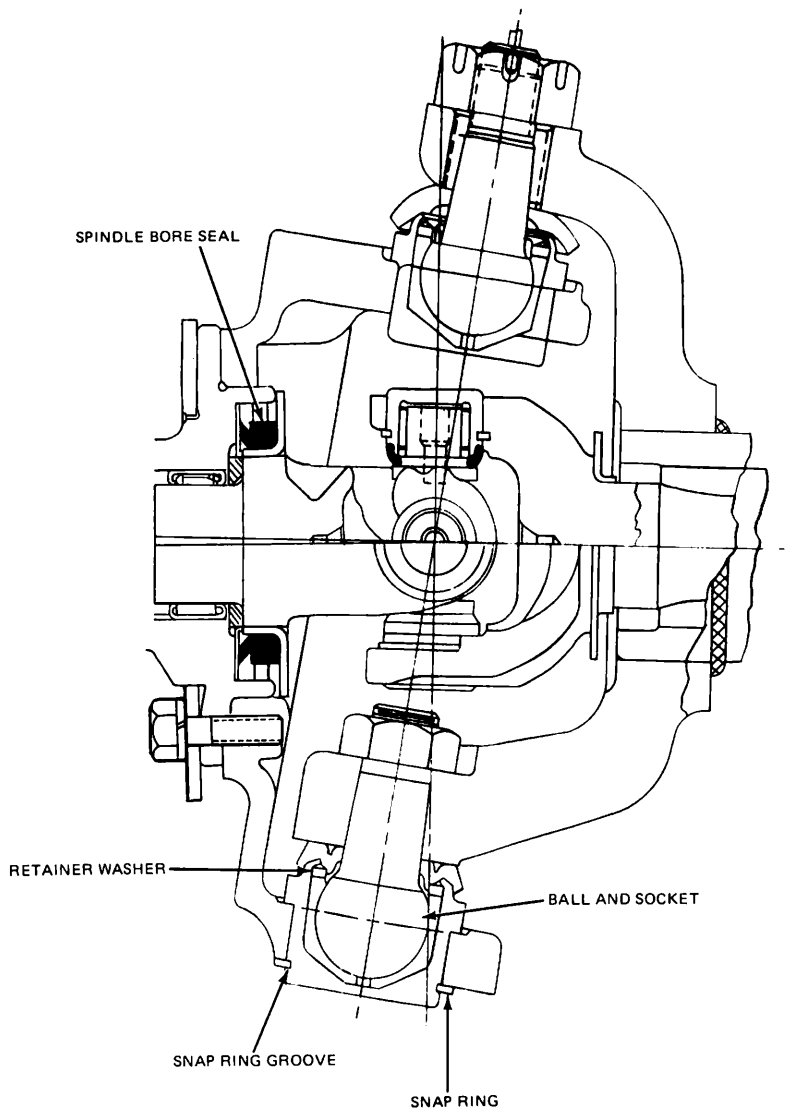

FIG. 1 Ball Joint and Seal Assemblies

FRONT WHEEL BEARING ADJUSTMENT

Front wheel bearing adjustment is covered in Part 11-12.

DRIVE PINION OIL SEAL

Removal

The drive pinion oil seal can be replaced without removing the axle assembly from the vehicle. Compounded or synthetic rubber seals do not require soaking in oil.

1. Raise the vehicle on a hoist or raise the front end of the vehicle with a jack. Install safety stands under the frame rails and lower the jack or hoist far enough to allow the axle to drop into the rebound position for working clearance.
2. Scribe marks on the companion flanges and U-joints for correct positioning at assembly, and remove the drive shaft.
3. Using Tool T57T-4851-B to hold the pinion companion flange, remove the pinion shaft nut.
4. Using Tool T56L-4851-C, remove the companion flange.
5. Using Tool-1175-AB, puller, in combination withslide hammer T50T-100-A, remove the pinion oil seal.

Installation

1. Clean the pinion oil seal seat. Coat the sealing edge of the new seal with a small amount of oil resistant sealer. **Do not put sealer on the sealing lip.** Drive the seal into the housing, using Tool T55P-4676-A.
2. Coat the inside of the pinion flange with a small quantity of lubricant (ESW-M2C105-B) D2AZ-19580-B, and install the flangs on the pinion shaft, using Tool-4858-B.
3. Install the pinion attaching nut on the pinion shaft and torque it to 200-220 ft-lb.
4. Position the drive shaft in the original location, matching the previously-made scribe marks, and install the attaching parts.

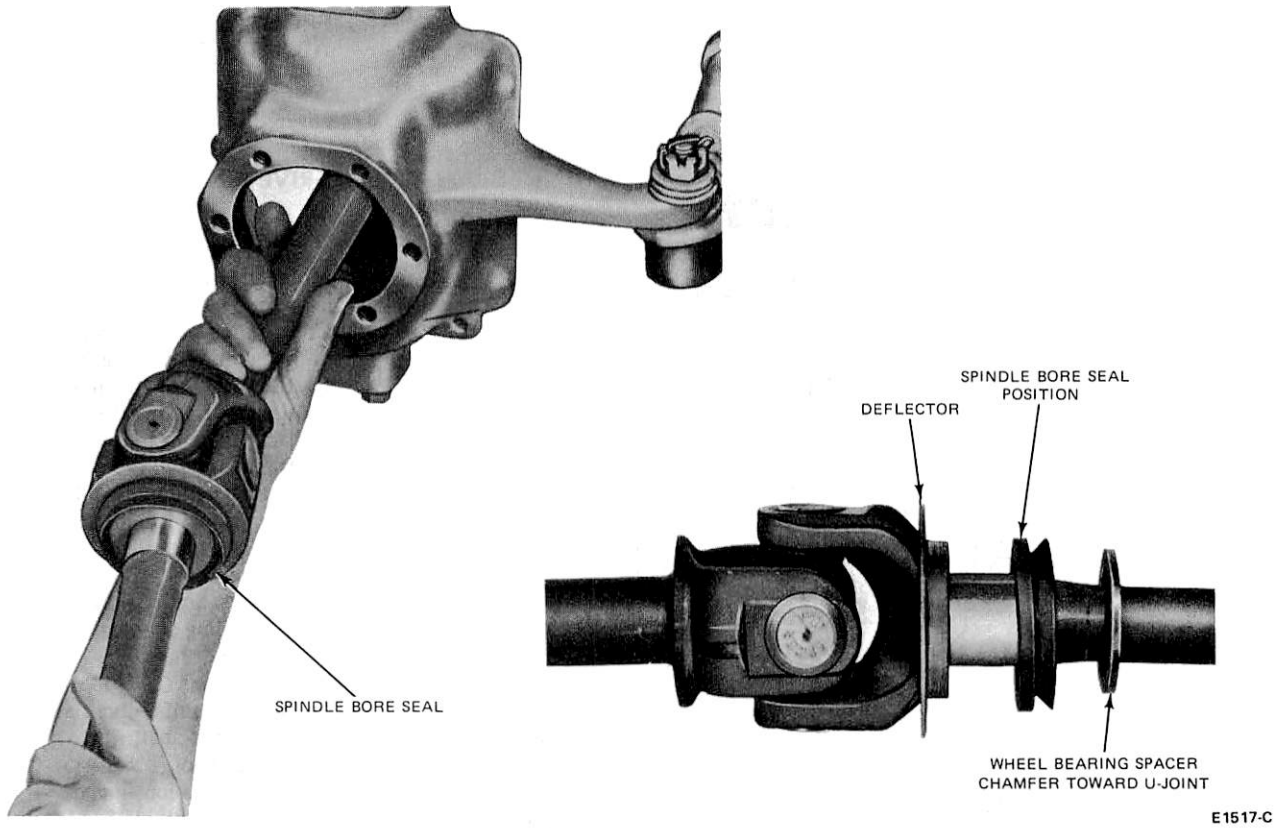

FIG. 2 Views of Seal Details

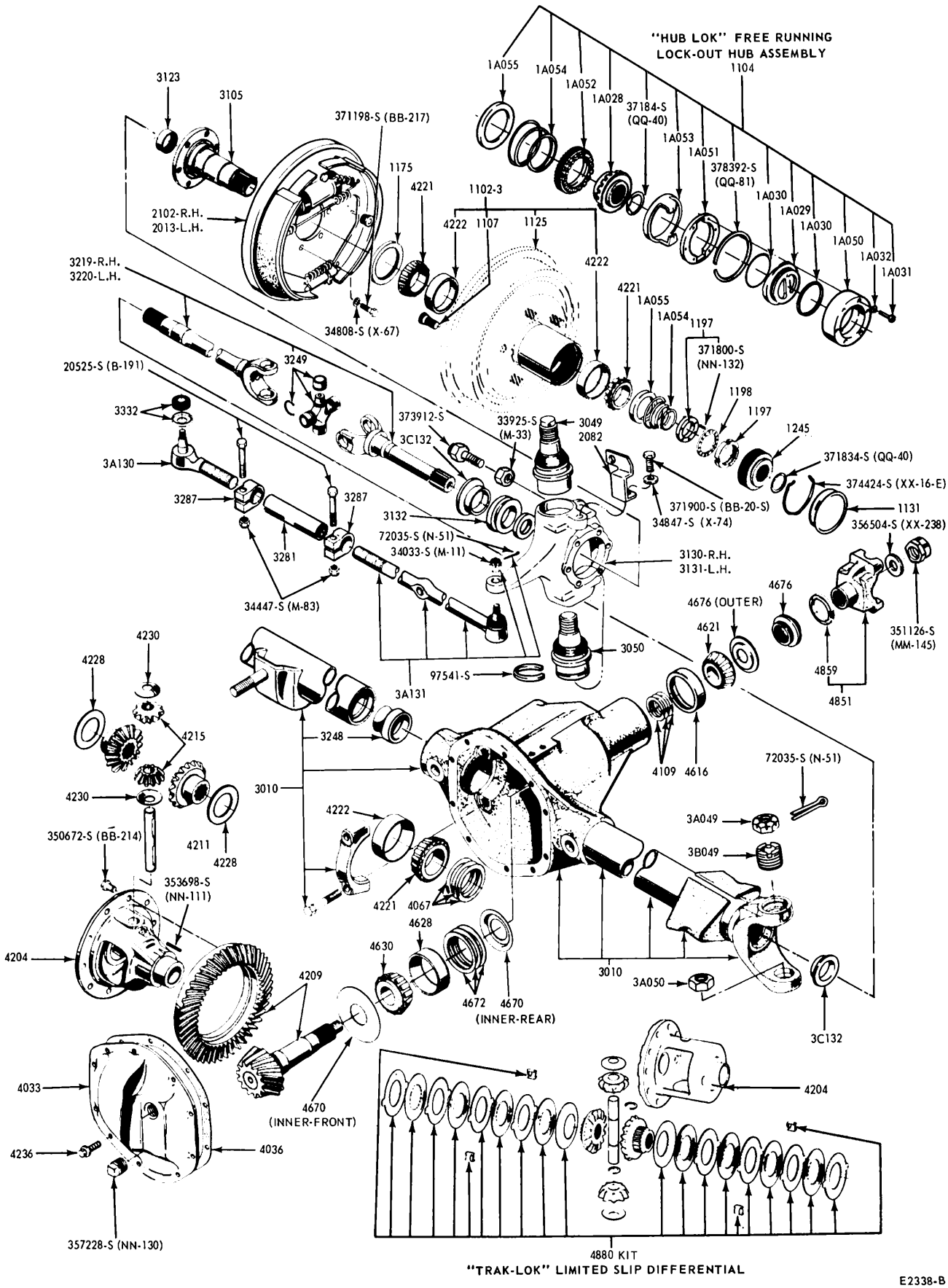

FIG. 3 Front Axle Assembly Complete—Exploded View

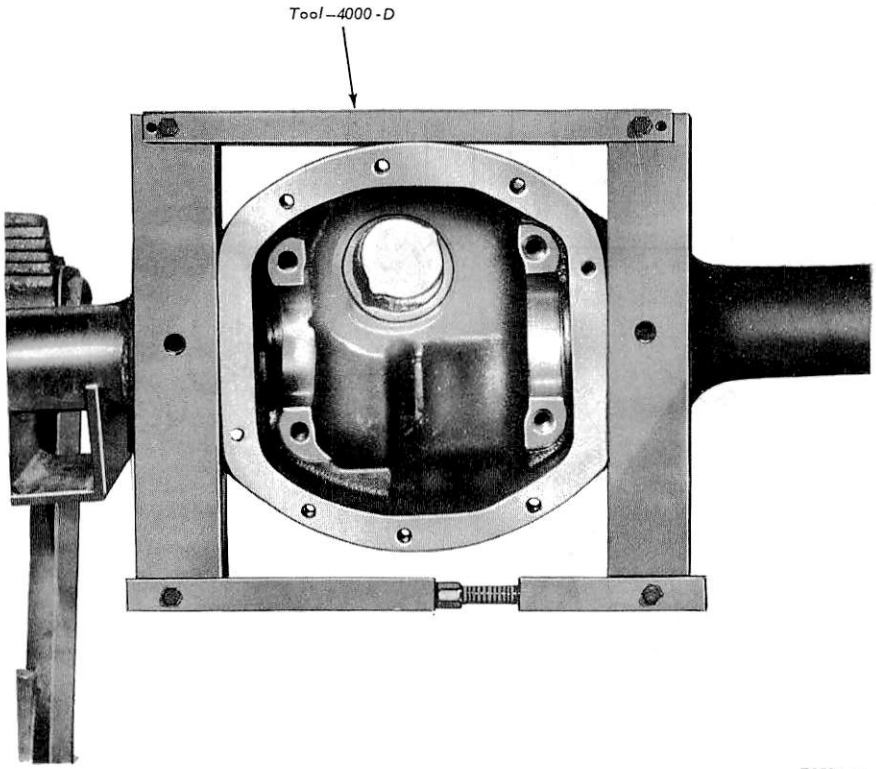

FIG. 4 Spreading Differential Housing

5. Torque the universal joint U-bolt attaching nuts to 15-20 ft-lb.
6. Raise the vehicle, remove the safety stands and then lower the vehicle to road position. Check the level of axle lubricant and add the specified lubricant as necessary.

REMOVAL AND INSTALLATION

FRONT AXLE SHAFT AND STEERING KNUCKLE

The removal and installation of these parts can be accomplished by following the step by step procedures in Part 15-30 under Removal and Installation, with just one exception. Under step 10 to remove the bottom socket it is necessary to first remove the snap ring at the bottom, for F-100 vehicles.

FRONT WHEEL DRIVE HUB-LOX HUB

Follow the procedures in Part 11-12.

F-100 4 x 4 FRONT AXLE HOUSING

Removal

1. Raise the vehicle on a hoist or jack and install safety stands under the radius arm brackets.
2. Follow the procedure detailed in Front Axle Shaft and Steering Knuckle Removal in Part 15-30, and remove the front wheels, tires, brake drums, brake backing plates, spindles and axle shafts.
3. Remove the hydraulic brake line brackets from each end of the axle without breaking the hydraulic connection. Disengage the hydraulic lines from the axle clips. Tie the lines to the frame to keep them out of the working area.
4. Disconnect the steering tie rod at the spindle connecting rod ends. Disconnect the axle stabilizer bar.
5. Disconnect the front drive shaft at the pinion companion flange and universal joint. Secure the drive shaft out of the working area.
6. Lower the vehicle onto the safety stands and place a jack under the axle to support it while disconnecting it from the radius arms.
7. Each radius arm and cap is marked for proper assembly, since they are manufactured as matched pairs (parts are numbered 1 through 100). Remove the bolts attaching the radius arms to the radius arm caps. Remove the rubber insulators and roll the axle from under the vehicle using the jack positioned in Step 6, above.

Installation

1. Position the front drive axle under the vehicle, using a floor jack, and install the radius arms, insulators and caps to the axle. Numbers on radius arm and cap should be alike and together. Torque the attaching bolts to specifications, tightening them diagonally in pairs.
2. Raise the vehicle to working height and install the drive shaft to the pinion companion flange at the universal joint. Torque the universal joint U-bolt nuts to specifications.
3. Connect the axle stabilizer bar. Connect the steering tie rod to the spindle arms by means of the steering connecting rod ends. Torque the attaching nuts to specifications and install the cotter pins.
4. Follow the procedure detailed in Front Axle Shaft and Spindle Arm Installation and install the axle

shafts, spindles and brake backing plates.
5. Position the hydraulic brake lines and brackets and install the retaining clips.
6. Install the front brake drums, wheels and tires. Adjust the front wheel bearings to specification (refer to Group 11, Part 12). Install the dust cap or locking hub cap and the wheel cover on each front wheel. If a dust cap is used, install it with a coat of non-hardening sealer on the sealing surface.
7. Lower the truck to running position and fill the axle housing with the specified lubricant.

DISASSEMBLY AND ASSEMBLY

PINION, DRIVE GEAR AND DIFFERENTIAL REPAIR

For major repair operations, refer to procedures outlined in Part 15-30, particularly for removing side gears and washers of limited slip axles from the differential gear case. For F-100 vehicles, when doing this operation use Kit T71T-4205-A (part of the 1971 Essential Kit), TKIT-1971-F or FX, and also available separately (See Disassembly and Assembly).

SPECIFICATIONS

DRIVE PINION ADJUSTING SHIM THICKNESS CHANGES DANA

Old Pinion Marking	New Pinion Marking								
	.4	.3	.2	.1	0	+1	+2	+3	+4
+4	+0.008	+0.007	+0.006	+0.005	+0.004	+0.003	+0.002	+0.001	0
+3	+0.007	+0.006	+0.005	+0.004	+0.003	+0.002	+0.001	0	−0.001
+2	+0.006	+0.005	+0.004	+0.003	+0.002	+0.001	0	−0.001	−0.002
+1	+0.005	+0.004	+0.003	+0.002	+0.001	0	−0.001	−0.002	−0.003
0	+0.004	+0.003	+0.002	+0.001	0	−0.001	−0.002	−0.003	−0.004
−1	+0.003	+0.002	+0.001	0	−0.001	−0.002	−0.003	−0.004	−0.005
−2	+0.002	+0.001	0	−0.001	−0.002	−0.003	−0.004	−0.005	−0.006
−3	+0.001	0	−0.001	−0.002	−0.003	−0.004	−0.005	−0.006	−0.007
−4	0	−0.001	−0.002	−0.003	−0.004	−0.005	−0.006	−0.007	−0.008

DANA AXLE ADJUSTMENTS

Description	Inch	Description	Scale Pull Lbs.
Backlash Between Ring Gear and Pinion	.004-.009	Steering Knuckle Turning Effort – Tie Rod Disconnected (1 Knuckle)	40
Backlash Maximum Variation Between Teeth	0.002		
Pinion Bearing Preload	20-40 in-lbs	Tie Rod Connected (2 Knuckles)	90

DANA AXLE TORQUE LIMITS – (FT-LBS)

Description	Ft-Lbs.	Description	Ft-Lbs.
Pinion Shaft Nut	200-220	Ball Joint Nut – Top	100
Differential Bearing Cap Bolts	70-90	– Bottom	80 ②
Ring Gear Attaching Bolts	45-65	Oil Filter Plug	40
Cover to Housing Bolts	30-40	U-Joint Bolts	15-20
Spindle Nut to Wheel Hub – Inner	50 ①	Backing Plate and Spindle to Steering Knuckle Retaining Bolts	30-40
– Outer	80-100		

① Torque to 50 ft-lbs, then back off 90 degrees and rotate to closest pin-hole.
② A torque prevailing nut. Do not reuse.

PART 15-32 Front Driving Axle - 44-6CF and 44-6CF HD 6CFHD - Dana

Applies to F-250 Only

COMPONENT INDEX	Page	COMPONENT INDEX	Page
AXLE (COMPLETE) Removal and Installation	32-04	DIFFERENTIAL (COMPLETE) Disassembly and Overhaul	32-04
AXLE SHAFT AND STEERING KNUCKLE Removal and Installation.....	32-01	PINION OIL SEAL Removal and Installation	32-03
DESCRIPTION (AXLE)	32-01	SPECIFICATIONS	32-05

DESCRIPTION

F-250 4-WHEEL DRIVE FRONT AXLES—DANA

Dana-design front-drive axles are provided for F-250 Ford trucks. Dana Model S 44-6CF and 44-6CF-HD are used on the F-250. The Dana Model 44-6CF and 44-6CF-HD used on the F-250 continues the use of the spherical, closed spindle and enclosed universal joint as in previous models.

Other than the unique parts required for front-wheel drive, these axles are mechanically identical to other Model 44 axles. It should be noted that the free running Hub-LOK hub is standard equipment.

ADJUSTMENTS

FRONT WHEEL BEARING ADJUSTMENT

Refer to Part 11-12 for front wheel bearing adjustment procedures.

FRONT AXLE SHAFT AND STEERING KNUCKLE

Removal

1. Raise the vehicle on a hoist.
2. Remove the front wheel free running hub; then remove the front wheel hub and drum as an assembly (Fig. 2). Refer to Group 11 and 12, for procedures.
3. Place a drain pan under the steering knuckle assembly (Fig. 1).
4. Remove the cap screws which retain the brake backing plate and spindle to the steering knuckle. Remove the brake backing plate and spindle (Fig. 3). **It is not necessary to disconnect the hydraulic brake flex line before removing the brake backing plate from the spindle. Support the brake backing plate so that the brake hose is not damaged.**
5. Remove the axle shaft.
6. Disconnect the steering drag link from the steering knuckle (Fig. 3).
7. Disconnect the spnindle connecting (tie) rod at both ends.
8. Remove the unitized seal from the steering arm (Fig. 1).
9. Remove the upper and lower king pin bearing caps and shims.
10. Remove the steering knuckle from the housing (Fig. 4). Remove the bearing cones.
11. If the bearing cups are to be removed from the housing, use the tool shown in Fig. 5.

Installation

1. If new seals are to be installed at the steering knuckle, place the new unitized seal assembly on the axle housing tube (Fig. 1). The seal assembly should be installed with the split up to prevent lubricant leakage.
2. Install the upper and lower king pin bearing cups in the axle housing yoke with handle T53L-200-A and driver T57P-4625-A.
3. Place the king pin bearing cones in the cups. Retain the lower bearing in place with multi-purpose lubricant C1AZ-19590-B
4. Place the steering knuckle over the yoke, and then install the lower and upper king pin bearing caps (Fig. 4). Install the old shims for a trial build-up. Torque the bearing cap bolts and stud nuts to specifications.
5. Check the steering knuckle bearing preload (Fig. 6). It should be between 5-10 ft.-lbs. for 6CF, and 10-15 ft.-lbs. for 6CFHD. Adjust the

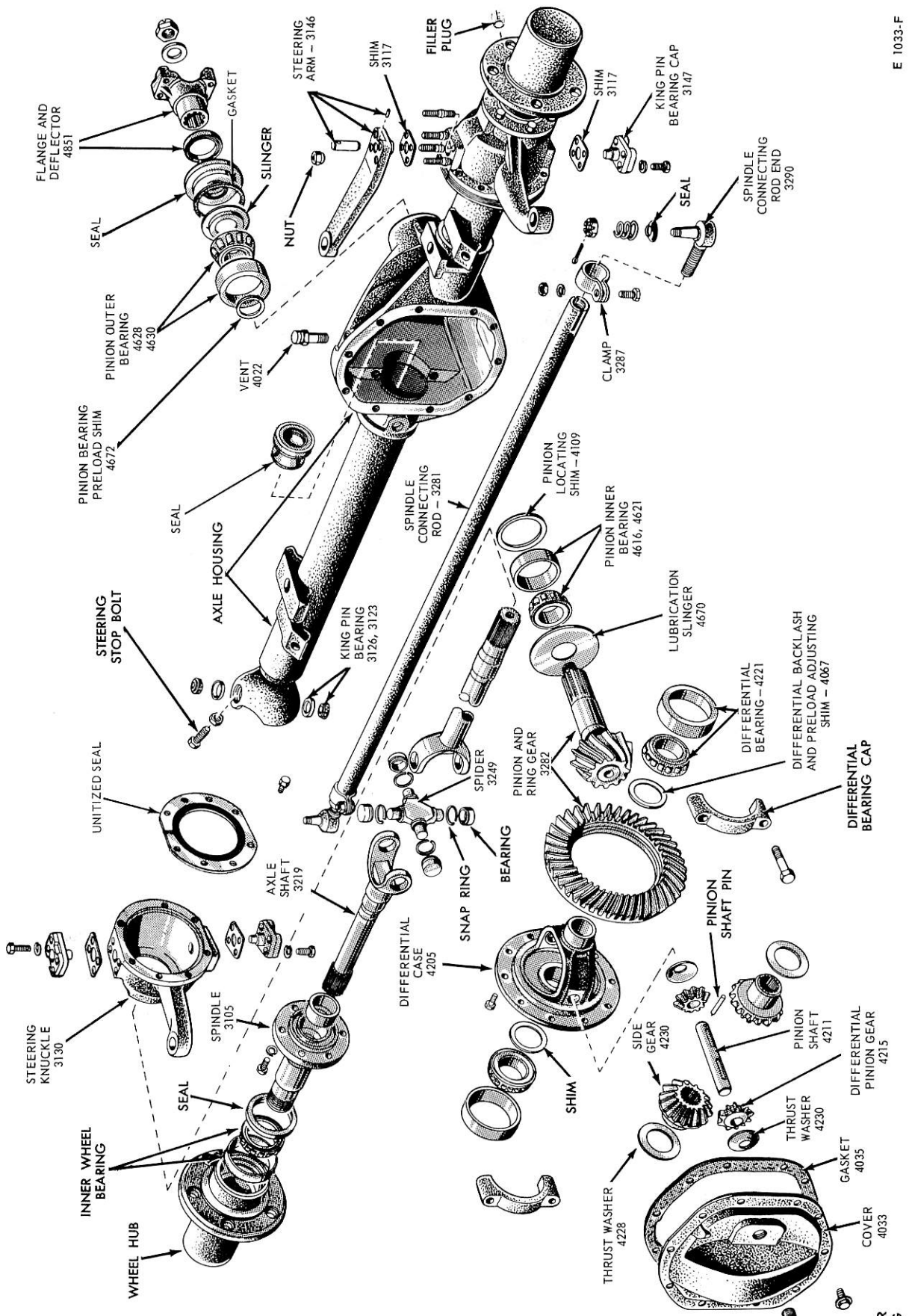

FIG. 1 Front Drive Axle Disassembled

shim thickness at the bearing caps, as required, to obtain the proper preload.

6. Install the knuckle seals as shown in Fig. 1 and torque the retaining screws to 10-15 ft.-lbs.
7. Connect the spindle connecting (tie) rod and the drag link.
8. Install the axle shaft.
9. Position the spindle and the brake backing plate on the steering knuckle, and then install the retaining cap screws. Torque the screws to 30-40 ft.-lbs. (Fig. 3). Install the oil baffle.
10. Install the wheel inner bearing cone on the spindle. Install the wheel hub and disc as an assembly; then install the free running Hub-Lok hubs (refer to Group 11, Part 12).
11. Fill the steering knuckle with the proper grade and amount of lubricant. Refer to Group 11, Part 12 for proper lubricant.

DRIVE PINION OIL SEAL

Removal

The drive pinion oil seal can be replaced without removing the axle assembly from the vehicle. Compounded or synthetic rubber seals do not require soaking.

1. Raise the vehicle on a hoist or raise the front end of the vehicle with a jack. Install safety stands under the frame rails and lower the jack or hoist far enough to allow the axle to drop into the rebound position for working clearance.
2. Scribe marks on the companion flanges and U-joints for correct positioning at assembly, and remove the drive shaft.
3. Using Tool T57T-4851-B to hold the pinion companion flange, remove the pinion shaft nut.
4. Using Tool T56L-4851-C, remove the companion flange.
5. Using Tool-1175-AB, puller, in combination with slide hammer T50T-100A, remove the pinion oil seal.

Installation

1. Clean the pinion oil seal seat. Coat the sealing edge of the new seal with a small amount of oil resistant sealer. **Do not put sealer on the sealing lip.** Drive the seal into the housing, using Tool T55P-4676-A.
2. Coat the inside of the pinion flange with a small quantity of rear axle lubricant and install the flange on the pinion shaft, using Tool-4858-B.
3. Install the pinion attaching nut on the pinion shaft and torque it to 200-220 ft-lbs.
4. Position the drive shaft in the original location, matching the previously-made scribe marks, and install the attaching parts.
5. Torque the universal joint U-bolt attaching nuts to 15-20 ft-lb.
6. Raise the vehicle, remove the safety stands and then lower the vehicle to road position. Check the level of axle lubricant and add the specified lubricant as necessary.

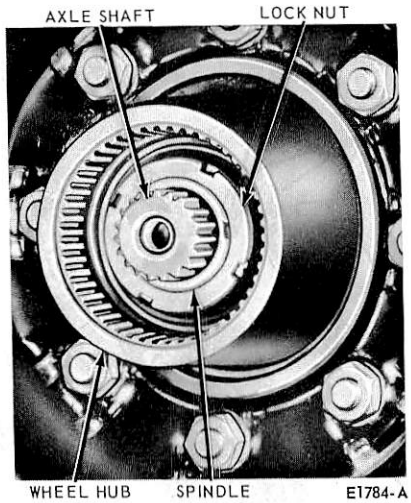

FIG. 2 Front Wheel Hub—4-Wheel Drive

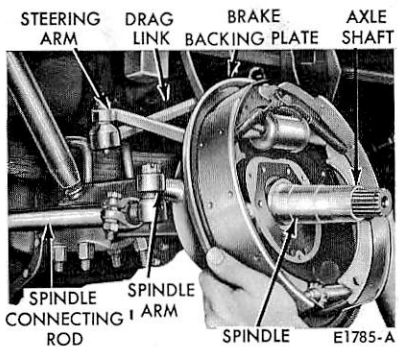

FIG. 3 Removing Brake Backing Plate

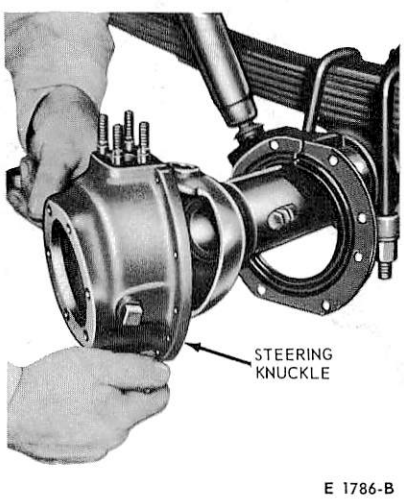

FIG. 4 Removing or Installing Steering Knuckle

FRONT WHEEL DRIVE HUB-LOK HUB

Front wheel drive free-running lock-out hub assemblies are standard on the F-250 4 x 4 model trucks.

An external design lock-out hub assembly is standard for the Model 446CFHD front drive axle. Refer to Part 11-12 for complete service procedures.

OPERATION—EXTERNAL TYPE

(Locked) Position

When the transfer case is to be shifted into the position for driving the front axle, turn the actuating knob so that it is aligned with the word lock stamped on the retainer cap. If the clutch teeth do not engage with the knob turned to this position, the clutch teeth are butted and a slight movement of the wheel in either direction will complete the lock. The front axle will now drive the wheel.

F-(Free) Position

When the transfer case is to be shifted into the position for driving the rear axle only, turn the actuating knob so that it is aligned with the word free stamped on the retainer cap. This will disengage the clutch teeth and thus unlock the wheel hub from the axle shaft. The wheel will now turn free on the axle. **Be certain that the transfer case is** shifted into 2-wheel drive position before disengaging the lock-out hub assembly.

Do not drive the vehicle with one hub engaged and the other disengaged.

Operation Internal Type Lock Position

When the transfer case is to be

shifted into the position for driving the front axle, the hub lock pointer on the center bar must point to the notch under the word LOCK on the retainer cap. If the clutch teeth do not engage with the knob turned to this position, the clutch teeth are butted and a slight movement of the wheel in either direction will complete the lock. The front axle will now drive the wheel. Do not operate in four-wheel drive with the hubs disengaged.

Free Position

When the transfer case is to be shifted into the position for driving the rear axle only, turn the hub lock pointer on the center bar so it points to the notch under the word FREE on the retainer cap. This will disengage the clutch teeth and thus unlock the wheel hub from the axle shaft The wheel will now turn free on the axle.

Be certain that the transfer case is lifted into 2-wheel drive position before disengaging the hub lock.

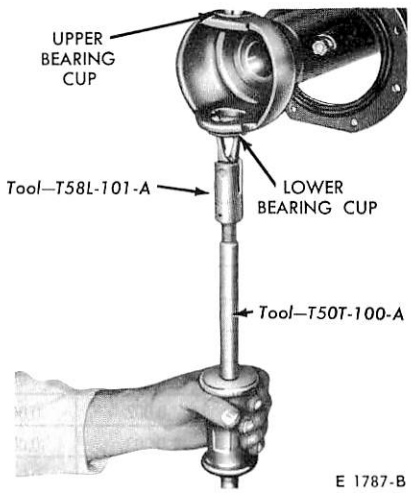

FIG. 5 Removing King Pin Bearing Cup

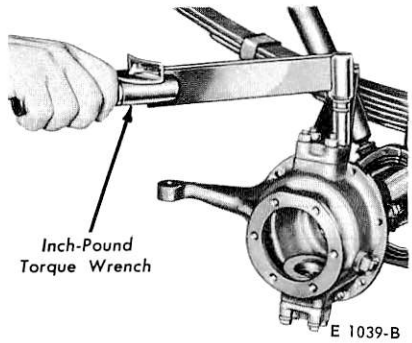

FIG. 6 Checking Steering Knuckle Bearing Preload

REMOVAL AND INSTALLATION

F-250 4 x 4 FRONT AXLE HOUSING

Removal

1. Raise the vehicle on a hoist so that no vehicle weight is supported by the front axle.
2. Remove the hubs, brake backing plates, axle shafts and steering knuckle as given in Front Axle Shaft and Steering Arm.
3. Disconnect both front axle shock absorbers at their lower ends.
4. Disconnect the front axle drive shaft at the pinion flange.
5. Support the front axle on a transmission jack, and then remove the spring clip (U-bolt) nuts and the spring seats.
6. Lower the axle assembly and roll it from under the truck.

Installation

1. Roll the axle under the vehicle and raise it so that the spring clips and spring seats can be installed.
2. Connect the front axle shock absorbers.
3. Connect the front axle drive shaft.
4. Complete the assembly as given in Front Axle Shaft and Steering Knuckle Removal and Installation.

DISASSEMBLY AND ASSEMBLY

PINION, DRIVE GEAR AND DIFFERENTIAL REPAIR

For major repair operations, refer to procedures outlined in Part 15-05, and 15-30, particularly for removing side gears and washers from the differential case. For F-250 vehicles, when doing this operation use Kit T-71T-4205-A (part of the 1971 Essential Kit), TKIT-1971-F or FX and also available separately (See Disassembly and Assembly).

SPECIFICATIONS

DRIVE PINION ADJUSTING SHIM THICKNESS CHANGES-DANA

Old Pinion Marking	New Pinion Marking								
	.4	.3	.2	.1	0	+1	+2	+3	+4
+4	+0.008	+0.007	+0.006	+0.005	+0.004	+0.003	+0.002	+0.001	0
+3	+0.007	+0.006	+0.005	+0.004	+0.003	+0.002	+0.001	0	-0.001
+2	+0.006	+0.005	+0.004	+0.003	+0.002	+0.001	0	-0.001	-0.002
+1	+0.005	+0.004	+0.003	+0.002	+0.001	0	-0.001	-0.002	-0.003
0	+0.004	+0.003	+0.002	+0.001	0	-0.001	-0.002	-0.003	-0.004
-1	+0.003	+0.002	+0.001	0	-0.001	-0.002	-0.003	-0.004	-0.005
-2	+0.002	+0.001	0	-0.001	-0.002	-0.003	-0.004	-0.005	-0.006
-3	+0.001	0	-0.001	-0.002	-0.003	-0.004	-0.005	-0.006	-0.007
-4	0	-0.001	-0.002	-0.003	-0.004	-0.005	-0.006	-0.007	-0.008

DANA AXLE ADJUSTMENTS

Description	Inch	Description	Ft-Lbs
Backlash Between Ring Gear and Pinion	.004-.009	Steering Knuckle Turning Torque (Starting)	
Backlash Maximum Variation Between Teeth	0.002	446CF	5-10
Pinion Bearing Preload	20-40 in-lbs	446CF-HD	10-15

DANA AXLE TORQUE LIMITS – (FT-LBS)

Description	Ft-Lbs	Description	446CF Ft-Lbs	446CF-HD Ft-Lbs
Pinion Shaft Nut	200-220	Ball Yoke Oil Seal Bolts	10-15	10-15
Differential Bearing Cap Bolts	70-90	Spindle Bearing Cap Bolts	30-40	80-90
Ring Gear Attaching Bolts	45-65	Spindle to Spindle Arm Bolts	30-40	80-90
Cover to Housing Bolts	30-40	Oil Filler Plug	40	40
Spindle Nut to Wheel Hub – Inner	50 ①	U-Joint Bolts	15-20	15-20
Outer	80-90	Backing Plate and Spindle to Steering Knuckle Retaining Bolts	30-40	30-40

① Torque to 50 ft-lbs, then back off 90 degrees and rotate to closest pin hole.

CE2402-A

PART 15-33 Front Driving AXLE - Rockwell

Applies to F-600 Only				
COMPONENT INDEX	Page		COMPONENT INDEX	Page
DESCRIPTION	33-01		REMOVAL AND INSTALLATION	33-02
DISASSEMBLY AND OVERHAUL	33-04		SPECIFICATIONS	33-09

DESCRIPTION

The Rockwell-Standard Front Driving Single Reduction Final Drive axle (Fig. 1) employs a heavy duty spiral bevel or hypoid pinion and gear. The differential and gear assembly is mounted on tapered roller bearings. The straddle mounted pinion has two tapered roller bearings in front of the pinion teeth which take the forward and reverse thrust and third bearing behind the pinion teeth to carry the radial load.

Single-Reduction Final Drives are available in a wide range of gear ratios and sizes to cover most operating conditions. The assemblies drive on the coast side.

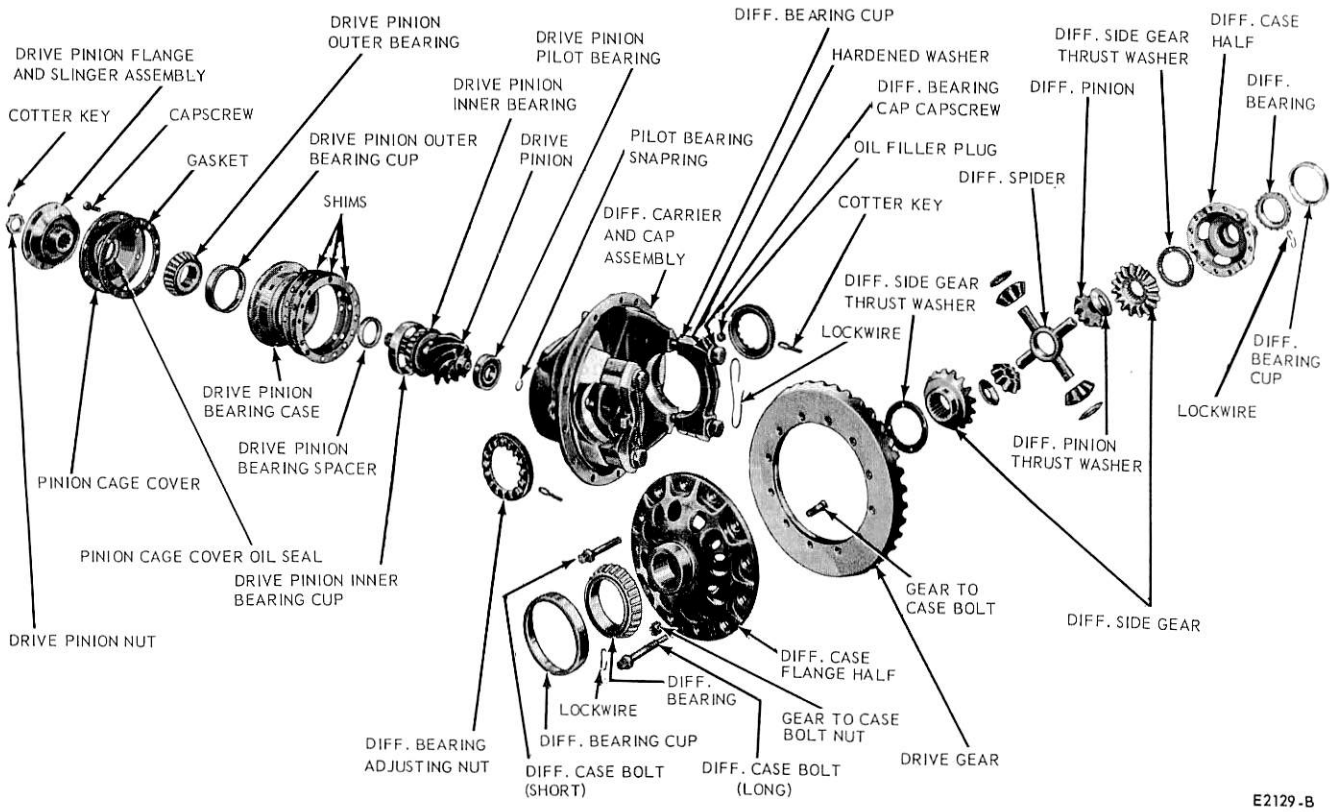

FIG. 1 Front Driving Axle Carrier—Exploded View

REMOVAL AND INSTALLATION

FRONT AXLE SHAFT AND STEERING KNUCKLE

Removal

1. Remove the axle shaft following steps 1 through 13, under Rockwell Four-Wheel Drive Front Axle Removal.
2. Remove the 4 upper bearing cap retaining screws (Figs. 2 and 6).
3. Raise the cap and steering arm and set aside. **Do not drop or lose the shims.**
4. Remove the bearing from the socket and set aside.
5. Remove the four lower bearing cap retaining screws (Figs. 2 and 6).
6. Remove the cap and bearing from the socket and set aside. **Do not drop or lose the shims.**
7. Remove the steering knuckle from the yoke.

Installation

1. Position the knuckle to the yoke.
2. Clean, lubricate and install the upper bearing.
3. Position the shims and bearing cap and steering arm to the knuckle and run in the retaining screws.
4. Clean, lubricate and position the lower bearing, then the shims and cap.
5. Run in the retaining screws.
6. Torque all upper and lower retaining screws to specifications.
7. Using a torque wrench, check the steering knuckle bearing preload.
8. Adjust the shim thickness at the bearing caps as required to bring the preload to specifications.

ROCKWELL FOUR-WHEEL DRIVE FRONT AXLE

Removal

1. Raise the vehicle and use adequate safety stands.
2. Remove the plug from the bottom of the axle housing and drain the lubricant. Replace the plug.
3. Disconnect the driveshaft at the pinion shaft.
4. Remove one front wheel from the brake drum and hub assembly.
5. Remove the outer hub cap retaining screws and remove the cap.
6. Remove the retaining lock ring (Fig. 3).
7. Remove the retaining screws and remove the splined drive plate.
8. Bend the tab of the lockwasher from the locknut and remove the locknut (Fig. 4).
9. Remove the lockwasher and **discard it, and remove the adjusting nut.**
10. Remove the drum and hub assembly from the axle spindle.
11. Remove the brake backing plate retaining screws and carefully lift out the backing plate and wire it up out of the way.
12. Remove the spindle positioning screw and remove the spindle (Fig. 5).
13. Remove the axle shaft from the housing (Fig. 6).
14. Repeat step 4 through 13 to remove the opposite axle shaft.
15. Remove the carrier to housing stud nuts and washers. Loosen two top nuts and leave on studs to prevent carrier from falling.
16. Break carrier loose from axle housing with rawhide mallet. A roller jack should be positioned and fastened to the carrier at this stage.
17. Remove the top nuts and washers and work the carrier free. A small pinch bar may be used to straighten the carrier in the housing bore. However, the end must be rounded to prevent indenting the carrier flange. A roller jack may be used to facilitate removal of the carrier.
18. Place the carrier in repair stand LRE-1730-A or other suitable holding fixture.
19. Prior to disassembly inspect the parts for defects, rotate the gears to test for roughness, and make pattern and backlash checks as a guide to any needed parts replacement. If the gears are not being replaced, the established backlash should be used at reassembly.

Installation

1. Remove all traces of old gasket material from the carrier and housing surfaces; then position a new gasket over the housing mounting studs.
2. Using a roller jack, ease the carrier into position in the housing bore.
3. Position two washers and run two nuts part way on to the studs to hold the carrier; then square up the carrier and align it properly with the housing.
4. Install the housing stud nuts and torque them to specifications.
5. Install one axle shaft in the housing (Fig. 6).
6. Install the spindle and secure it with the positioning screw (Fig. 4).
7. Position the brake backing plate, install the retaining screws and torque to specifications.
8. Carefully position the drum and hub assembly on the axle spindle, and run up the adjusting nut.
9. Using the adjusting nut make the wheel bearing adjustment (Refer to Part 11-12, Adjustments). Position a new lockwasher against the adjusting nut and apply a film of oil to the outer face of the lockwasher.
10. Run the lock nut against the lockwasher and torque it to specifications.
11. Bend one tab of the lockwasher over the adjusting nut.
12. Bend one tab of the lockwasher (in the opposite direction) over the lock nut (Fig. 4). **Use a blunt tool in steps 11 and 12 to avoid making any chips which could cause bearing damage.**
13. Apply Silastic Sealer to the front and rear mounting faces of the splined drive plate, position the drive plate and install the plate retaining screws and torque them to specifications.
14. Install the retaining lock ring (Fig. 3).
15. Position the outer hub cap and install the retaining screws and torque them to specifications.
16. Install the front wheel and torque the nuts to specifications.
17. Connect the drive shaft at the pinion shaft.
18. Repeat steps 5 through 16 for the appropriate axle shaft assembly.
19. Make sure that the housing drain plug has been installed and properly torque.
20. Fill the axle housing with the correct grade and quantity of lubricant.
21. Lower the vehicle.

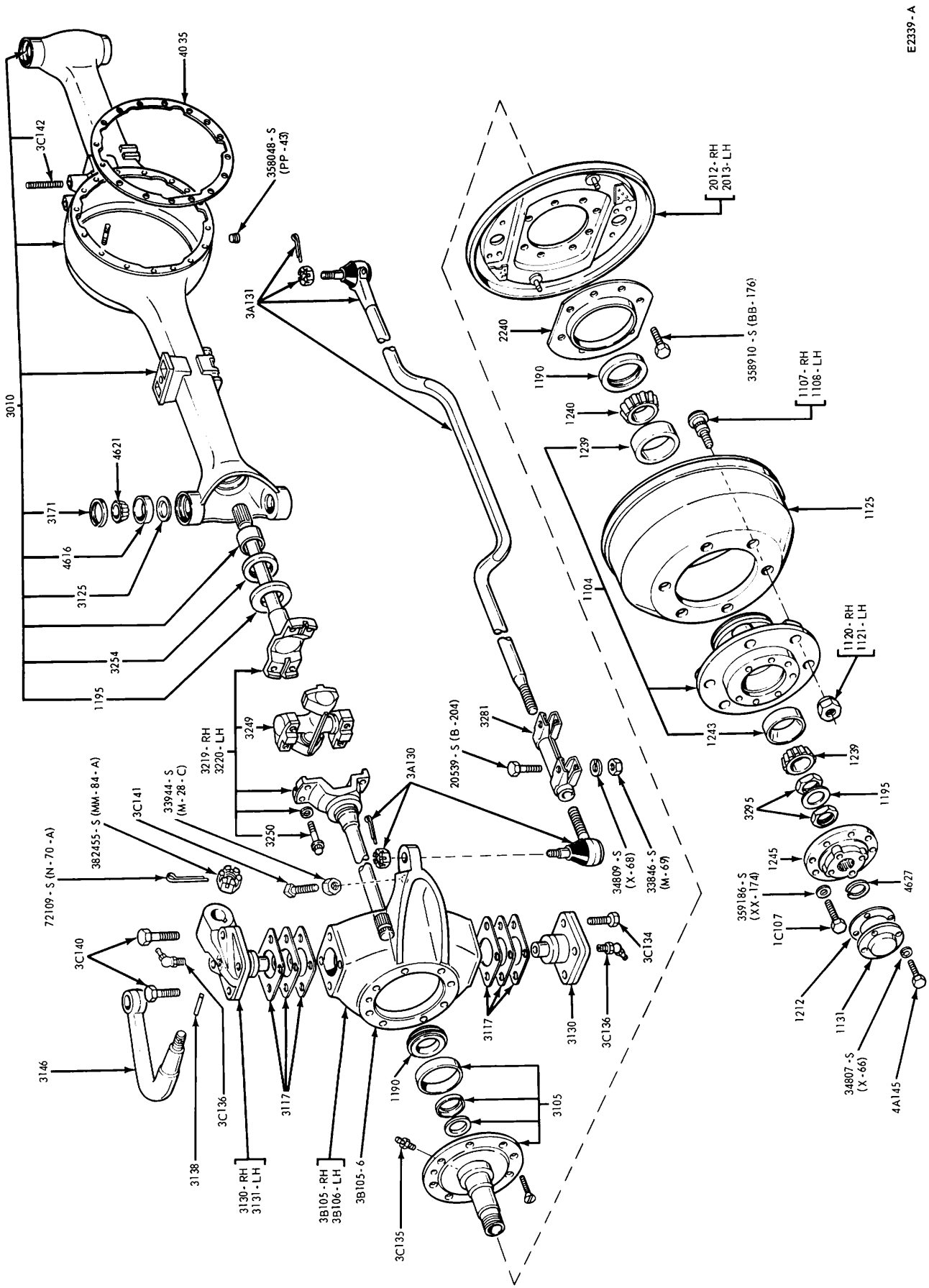

FIG. 2 Front Driving Axle Assembly—Exploded View

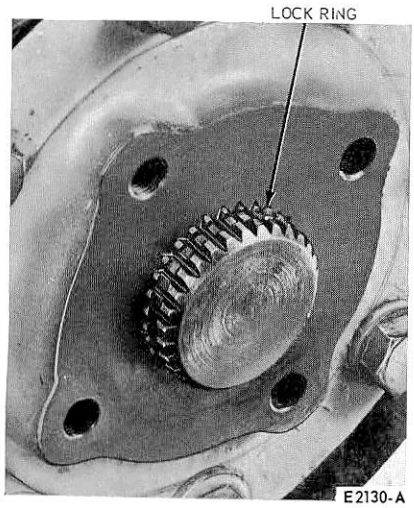

FIG. 3 Access to Lock Ring

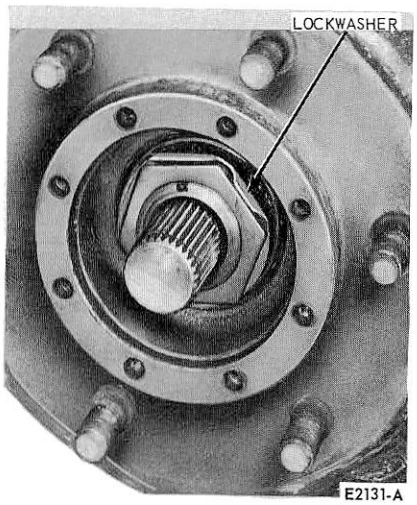

FIG. 4 Locknut and Washer Assembled

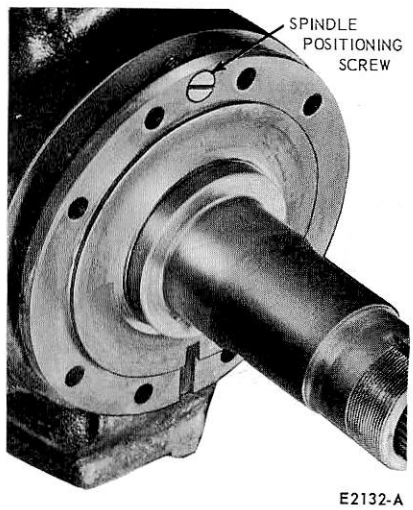

FIG. 5 Spindle in Position

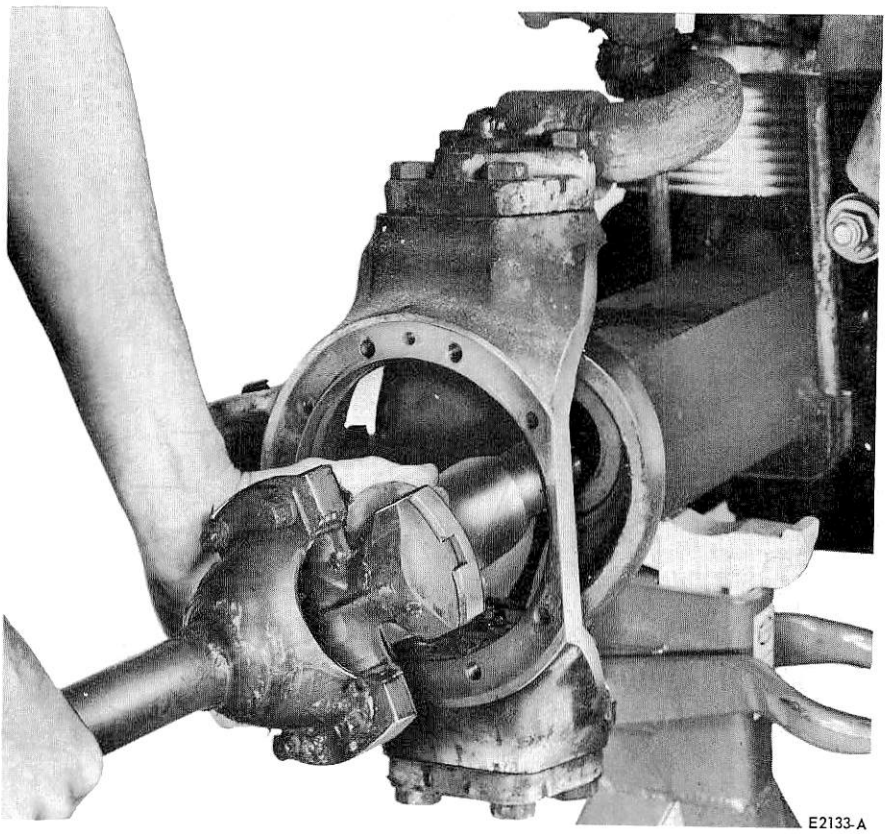

FIG. 6 Axle Removal

DISASSEMBLY AND ASSEMBLY

DISASSEMBLY

1. Center punch one differential carrier leg and bearing cap to identify for properly reassembling (Fig. 7).
2. Cut lock wire. Remove cap screws and adjusting nut locks.
3. Remove bearing cap stud nuts or cap screws, bearing caps and adjusting nuts.
4. Lift out differential and gear assembly.
5. If original identification marks are not clear, mark differential case halves with a punch or chisel for correct alignment on reassembling (Fig. 8).
6. Cut lock wire, remove bolts and separate case halves.
7. Remove spider, pinions, side gears and thrust washers.
8. If necessary, remove rivets and separate gear and case.
9. Carefully center punch rivets in center of head.
10. Use a drill 1/32 inch smaller than body of rivet to drill through head (Fig. 9).
11. Press out rivets. **Do not attempt to use a chisel to remove the rivets as this will elongate the flange holes.**
12. If necessary to replace differential bearings, remove with a suitable puller (Fig. 10).
13. Hold flange or yoke with Tool T57T-4851-B and remove pinion shaft nut washer and cage (Fig. 11).
14. Remove flange or yoke with a puller T65L-4851-A (Fig. 12). **Driving the flange off will cause runout.**
15. Remove pinion cage stud nuts or cap screws.

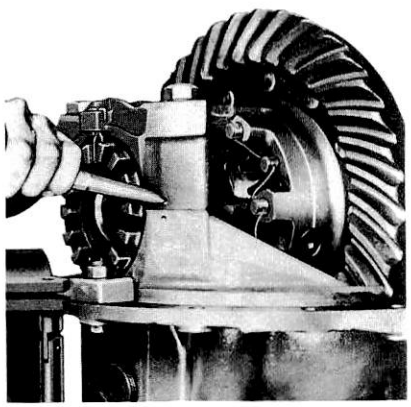

E2135-A

FIG. 7 Bearing Cap Identification

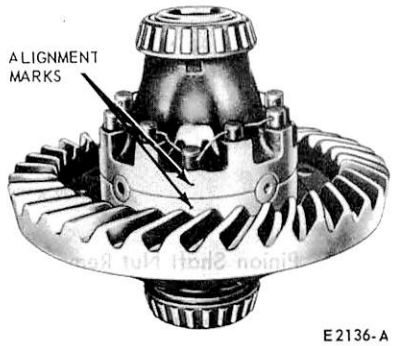

E2136-A

FIG. 8 Alignment of Differential Sections

16. Remove bearing cover and oil seal assembly.
17. Remove bearing cage. Original may have puller holes (Fig. 13).

The use of a pinch bar will damage the shims. Driving pinion from inner end with a drift will damage the bearing lock ring groove.

Wire shim pack together to facilitate adjustment on reassembling.

18. To disassemble the pinion and cage assembly tap shaft out of cage with soft mallet or press shaft from cage.
19. Remove outer bearing from cage. Remove spacer or spacer combination from pinion shaft.
20. If necessary to replace rear thrust bearing or radial bearing, remove with suitable puller (Fig. 14).
21. Remove oil seal assembly from bearing cover.

ASSEMBLY

Prior to performing any assembly steps important precautions should be taken.

Parts having ground and polished surfaces such as gears, bearings, shafts and collars, should be cleaned in a suitable solvent such as kerosene or diesel fuel oil.

Gasoline should be avoided.

Do NOT clean these parts in a hot solution tank or with water and alkaline solutions such as sodium hydroxide, orthosilicates or phosphates.

Steam cleaning assembled drive units after they have been removed from the housing is not recommended. When this method of cleaning is used, water is trapped in the cored passage of the castings and in the close clearances between parts as well as on the parts. This can lead to corrosion (rust) of critical parts of the assembly and the possibility of circulating rust particles

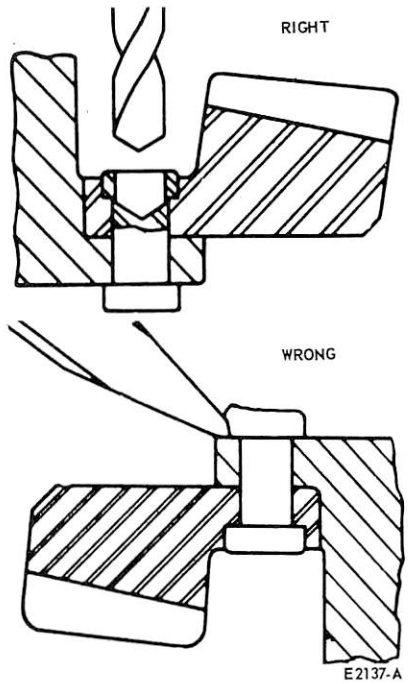

E2137-A

FIG. 9 Rivet Removal

in the lubricant. Premature failure of bearings, gears and other parts can be caused by this practice. Assembled drive units cannot be properly cleaned by steam cleaning, dipping or slushing. Complete drive unit disassembly is a necessary requisite to thorough cleaning.

Rough parts such as differential carrier castings, cast brackets and some brake parts may be cleaned in hot solution tanks with mild alkali solutions providing these parts are not ground or polished. The parts should remain in the tank long enough to be thoroughly cleaned and heated through. This will aid the evaporation of the rinse water. The parts should be thoroughly rinsed after cleaning to remove all traces of alkali.

Exercise care to avoid skin rashes and inhalation of vapors when using alkali cleaners.

Completely assembled axles, torque dividers and transfer cases may be steam cleaned on the outside only, to facilitate initial removal and disassembly, providing all openings are closed. Breathers, vented shift units, and all other openings should be tightly covered or closed to prevent the possibility of water entering the assembly.

Parts should be thoroughly dried immediately after cleaning. Use soft,

clean, lintless absorbent paper towels or wiping rags free of abrasive material, such as lapping compound, metal filings or contaminated oil. Bearings should never be dried by spinning with compressed air.

Parts that have been cleaned, dried, inspected and are to be immediately reassembled should be coated with light oil to prevent corrosion. If these parts are to be stored for any length of time, they should be treated with a good rust preventive and wrapped in special paper or other material designed to prevent corrosion.

It is impossible to overstress the importance of careful and thorough inspection of drive unit parts prior to reassembly. Thorough visual inspection for indications of wear or stress, and the replacement of such parts as are necessary will eliminate costly and avoidable drive unit failure.

Inspect all bearings, cups and cones, including those not removed from parts of the drive unit, and replace if rollers or cups are worn, pitted or damaged in any way. Remove parts needing replacement with a suitable puller or in a press with sleeves. Avoid the use of drifts and hammers. They may easily mutilate or distort component parts.

Inspect hypoid gears for wear or damage. Gears which are worn, ridged, pitted or scored, should be replaced. When necessary to replace either the pinion or gear of hypoid set, the entire gear set should be replaced.

Inspect the differential assembly for pitted, scored or worn thrust surfaces of differential case halves, thrust washers, spider trunnions and differential gears. Thrust washers must be replaced in sets. The use of a combination of old and new washers will result in premature failure.

Check for wear or damage to the differential pinion and side gear teeth. Always replace differential pinions and side gears in sets.

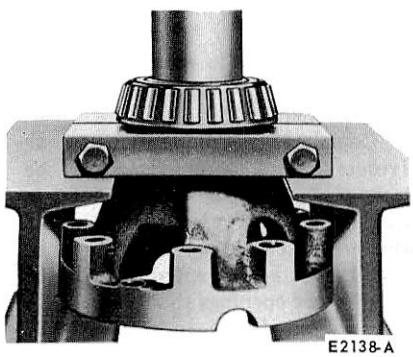

FIG. 10 Bearing Removal

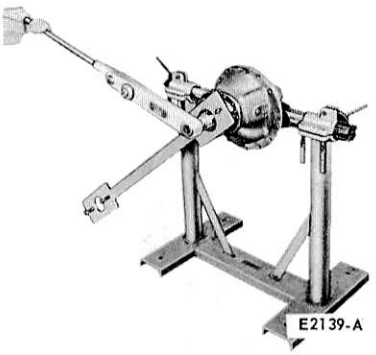

FIG. 11 Pinion Shaft Nut Removal

Inspect axle shafts for signs of torsional fractures or other indication of impending failure.

1. If new cups are to be installed, press firmly against pinion bearing cage shoulders using Tool T53T-4616-C.
2. Lubricate bearings and cups with light machine oil.
3. Press rear thrust and radial bearings firmly against the pinion shoulders with chamfer toward pinion teeth using a suitable sleeve that will bear only on bearing inner race T53T-4621-A (Fig. 15).
4. Install radial bearing lock ring and squeeze ring into pinion shaft groove with pliers.
5. Insert pinion and bearing assembly in pinion cage and position spacer or spacer combination over pinion shaft.
6. Press front bearing firmly against spacer.
7. Rotate cage several revolutions to assure normal bearing contact.
8. While in press under pressure, check bearing preload torque. Wrap soft wire around cage and pull on horizontal line with pound scale (Fig. 16). If a press is not available, the pinion nut may be tightened to the correct torque and preload checked.

For correct pressures and torque for checking pinion bearing preload refer to the Specifications Section in this Part.

If rotating torque is not within 5 to 15 ins-lb, use thinner spacer to increase or thicker spacer to decrease preload.

Example: Assuming pinion cage diameter to be 6 inches, the radius would be 3 inches and with 5 pounds pull woul equal 15 ins-lb preload torque.

9. Press flange or yoke against forward bearing and install washer and pinion shaft nut.
10. Place pinion and cage assembly over carrier studs, hold flange and tighten pinion shaft nut to the correct torque. The flange must be held with a suitable tool or fixture to tighten nut (Fig. 11).
11. Recheck pinion bearing preload torque. If rotating torque is not within 5 to 15 ins-lb, repeat the foregoing procedure.
12. Hold flange and remove pinion shaft nut and flange.
13. Lubricate pinion shaft oil seal and cover outer edge of seal body with a non-hardening sealing compound. Press seal against cover shoulder with seal driver (Fig. 17).
14. Install new gasket and bearing cover.
15. Press flange against forward bearing and install washer and pinion shaft nut.
16. Tighten to the correct torque and install cotter key.

Do not back off nut to align cotter key holes.

17. Install correct shim pack. **Locate thin shims on both sides for maximum sealing ability.**
18. Position pinion and cage assembly over studs and tap into position with soft mallet.
19. Install lock washers and stud nuts or cap screws. Torque to specifications.
20. If it was removed, position the gear to the case.

Differential case and gear bolts are available for service replacement of rivets. The use of bolts greatly facilitates servicing these units in the field and eliminates the need for special equipment necessary to correctly cold upset rivets. Consult chart for service bolt instruction shown with the torque chart (Specifications in this Part).

21. Lubricate differential case inner walls and all component parts with axle lubricant.
22. Position thrust washer and side gear in bevel gear and case half assembly.
23. Place spider with pinions and thrust washers in position.
24. Install component side gear and thrust washer.
25. Align mating marks, position component case half and draw

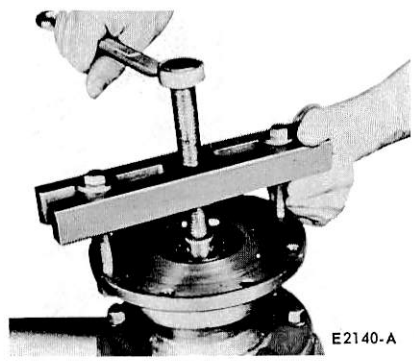

FIG. 12 Yoke Removal

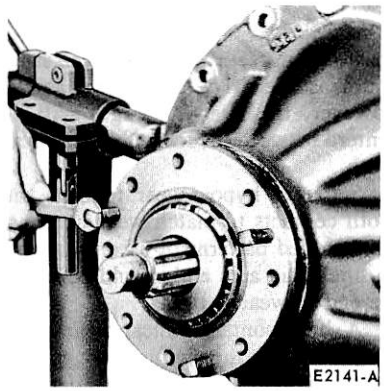

FIG. 13 Bearing Cage Removal

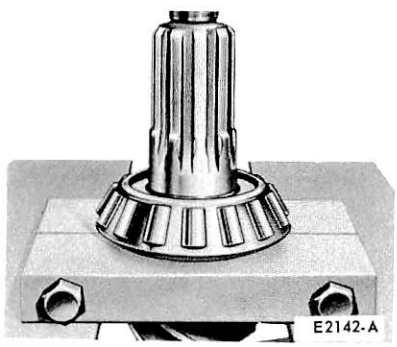

FIG. 14 Bearing Removal



FIG. 15 Rear Bearing Installation

assembly together with four bolts or cap screws equally spaced (Fig. 18).

26. Check assembly for free rotation of differential gears and correct if necessary.
27. Install remaining bolts and cap screws, tighten to the correct torque and lock wire.
28. If bearings are to be replaced, press squarely and firmly on differential case halves Tool T56T-4242-A.
29. Temporarily install the bearing cups, threaded adjusting rings where employed and bearing caps. Tighten the cap screws to the proper torque.
30. The bearing cups must be of a hand push fit in the bores, otherwise the bores must be reworked with a scraper or some emery cloth until a hand push fit is obtained. Use a blued bearing cup as a gauge and check the fits as work progresses. Once the cups fit properly, remove the bearing caps (Fig. 19).
31. After checking related parts, coat the differential bearing cones and cups with specified rear axle lubricant.
32. Place the bearing cups over the assembled differential bearing cones, then position the differential assembly in the carrier.
33. Insert bearing adjusting nuts and turn handtight against bearing cups.
34. Install bearing caps in the correct location as marked and tap lightly into position.
35. **If bearing caps do not position properly, adjusting nuts may be cross threaded. Remove caps and reposition the adjusting nuts. Forcing caps into position will result in irrepairable damage to the carrier housing or bearing caps.**
36. Install flat washers where used and stud nuts or cap screws. Tighten stud nuts or cap screws to specifications.
37. Using dial indicator at back-face of gear, loosen the bearing adjusting nut on **the side opposite gear only** sufficient to notice end play on the indicator.
38. Tighten the same adjusting nut only sufficient to obtain .000 end play.
39. Check gear for runout. If runout exceeds .008 inch, remove differential and check for cause.
40. Tighten adjusting nuts **one notch each** from .000 end play to preload differential bearings.
41. If the drive gear is not going to be replaced, the established backlash recorded before disassembly should be used. For new gears the new backlash should be initially set at .010 inch. Adjust backlash by moving the gear only. This is done by backing off one adjust ring and

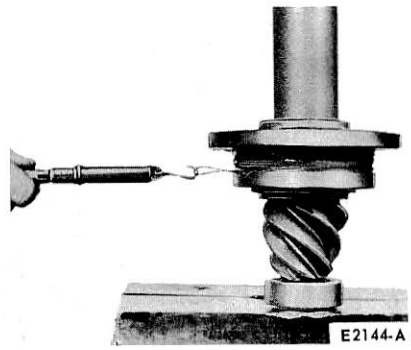

FIG. 16 Checking Bearing Pre-Load Torque



FIG. 17 Seal Installation



FIG. 18 Case-to-Gear Alignment



FIG. 19 Fitting Bearing Cups

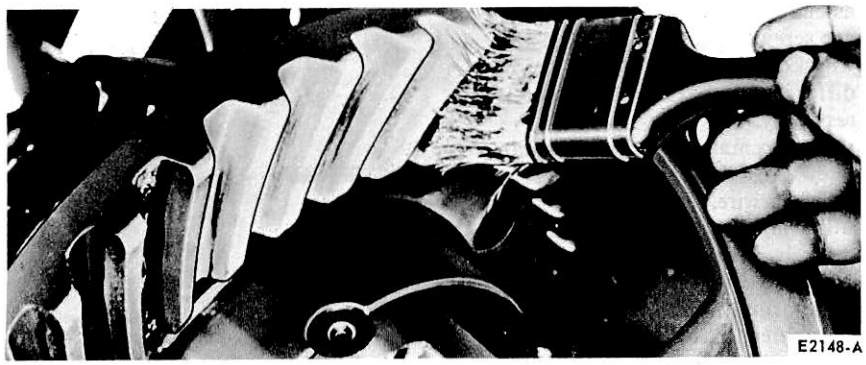

FIG. 20 Application for Pattern Check

advancing the opposite ring the same amount.

42. Apply oiled red lead lightly to the hypoid gear teeth. When the pinion is rotated, the red lead is squeezed away by the contact of the teeth, leaving bare areas the exact size, shape and location of the contacts (Fig. 20).
43. Sharper impressions may be obtained by applying a small amount of resistance to the gear with a flat steel bar and using a wrench to rotate the pinion. When making adjustments, check the drive side of the gear teeth. Coast side should be automatically correct when drive side is correct. As a rule, coating about twelve teeth is sufficient for checking purposes.
44. After obtaining a satisfactory tooth contact, especially in relation to the top and bottom of the tooth, the backlash can be altered within the limits of .005 inch-.015 inch to obtain a better contact position relative to the length of the tooth.
45. A high backlash setting can be used to keep the contact from starting too close to the toe, and a low backlash setting can be used to keep the contact from starting too far away from the toe.
46. After correct tooth contact has been established, install adjusting nut locks and cap screws. Tighten cap screws and lock wire to bearing cap screws.

With gears unloaded and with adjustments properly made (pinion at correct depth and backlash set at .010 inch) the contacts shown in the left view of Fig. 21 will be procured. The area of contact favors the toe and is centered between the top and bottom of the tooth.

The hand rolled pattern shown at left (gears unloaded), will result in a pattern centered in the length of the tooth when the gears are under load shown at right. The loaded pattern will be almost full length and the top of pattern will approach the top of the gear tooth.

With gears loaded the pattern on the coast side of teeth will appear the same width as the drive side shown above; however, the over-all length will be centerd between the toe and heel of gear tooth.

Set used hypoid gear to have the tooth contacts to match wear patterns. Hand rolled patterns of used gears will be smaller in area and should be at the toe end of wear patterns.

A high contact indicates pinion is too far out. Set the pinion to the correct depth by removing shims under the pinion cage. Slight outward movement of hypoid gear may be necessary to maintain correct backlash (Fig. 22).

A low contact indicates pinion is too deep. Set the pinion to the correct depth by adding shims under the pinion cage. Slight inward movement of the hypoid gear may be necessary to maintain correct backlash (Fig. 22).

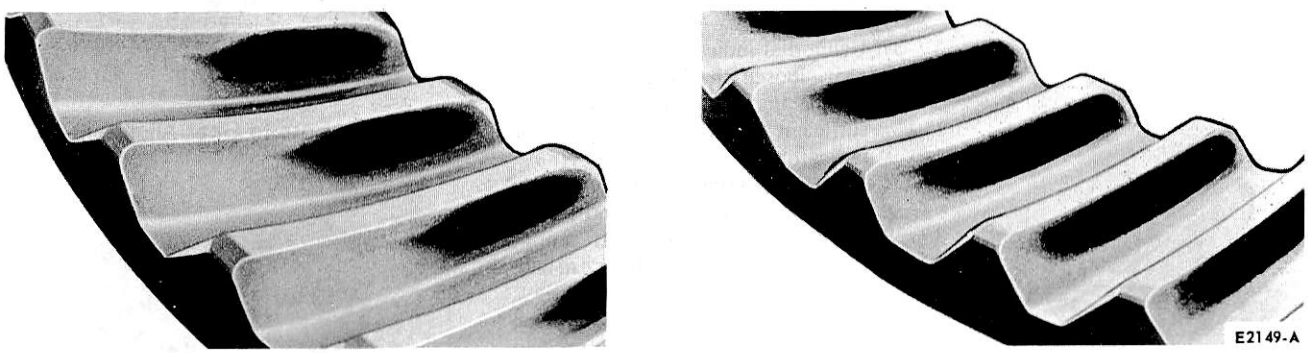

FIG. 21 Satisfactory Loaded and Unloaded Gear Patterns

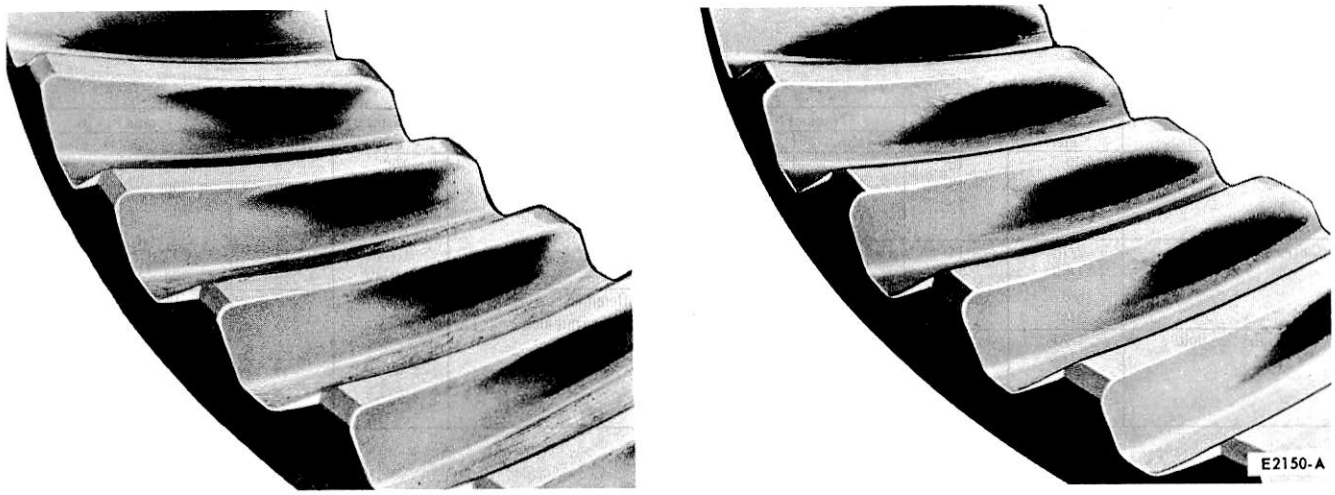

FIG. 22 Unsatisfactory Gear Patterns

SPECIFICATIONS

CAP SCREWS AND STUD NUTS

Location	Diameter	No. Threads	Torque Ft-Lbs. Min.	Torque Ft-Lbs. Max.
Pinion cage	3/8"	16	27	35
	1/2"	13	81	104
	9/16"	12	116	149
	5/8"	11	160	205
Carrier to housing	7/16"	14	53	67
	1/2"	20	92	118
	5/8"	18	185	235
	3/4"	16	320	415
Differential case bolt	1/2"	20	92	118
	9/16"	18	130	167
	5/8"	18	185	235
	3/4"	16	320	415
Pinion shaft	7/8"	20	175	250
	1"	20	300	400
	1-1/4"	18	700	900
	1-1/2"	18	800	1100
	1-1/2"	12	800	1100
	1-3/4"	12	800	1100
Differential bearing adjusting nut lock	5/16"	18	16	20
	1/2"	13	81	104

DIFFERENTIAL BEARING CAP – CAP SCREWS OR STUD NUTS

Cap Screw or Stud Nut Diameter	Cap Screw or Coarse Stud Thread	Stud Nut or Fine Thread	Torque Ft-Lbs. Min.	Torque Ft-Lbs. Max.
5/8"	11	18	160	205
3/4"	10	16	290	370
7/8"	9	14	470	595
7/8"	14	14	510	655
1"	14	14	580	745

Torques given apply to parts coated with machine oil. Nuts on studs to use same torque as for driving the stud.

TORQUE REQUIRED TO OBTAIN PINION BEARING PRELOAD

Pinion Shaft Thread Size	Pressure Required to Obtain Correct Preload	Ft-Lbs.
1" x 20	6 tons	300–400
1-1/4" x 18	11 tons	700–900
1-1/2" x 12	14 tons	800–1100
1-1/2" x 18	14 tons	800–1100
1-3/4" x 12	14 tons	800–1100

Use rotating torque, not starting torque.

APPROXIMATE LUBRICANT REFILL CAPACITY (PINTS)

	US	IMP
Axle	13	10-7/8

STEERING KNUCKLE PRELOAD TORQUE

	Ft-Lbs.
Bearing Preload	11–15

BEARING CAP TO KNUCKLE (CAPSCREW) TORQUE

Cap Screw Diameter	Cap Screw Thread	Torque Ft-Lbs.
5/8	11	185–235

CE 2215-B

PART 15-40 Traction-Lok Limited Slip Differential - Ford

Applies to Bronco, F-100 (4 x 2) and F-100 (4 x 4) Only

COMPONENT INDEX	Page	COMPONENT INDEX	Page
DESCRIPTION	40-01	DISASSEMBLY AND OVERHAUL	40-02

The Traction-Lok differential (Fig. 1) employs a multiple disc clutch to control differential action, Shim(s), which control side gear mounting distance, four steel, four friction and one composite plate (steel on one side and friction material on the other) stacked on a clutch hub, and four ear guides are housed in the differential cover. Located in the differential case between the side gears is a one-piece pre-load plate and block and four calibrated pre-load springs, which apply an intial force to the clutch pack. Additional clutch capacity is derived from the side gear thrust loads. The four friction plates are splined to the clutch hub which in turn is splined to the left axle shaft, and the eared steel plates are dogged to the case; thus, the clutch is always engaged.

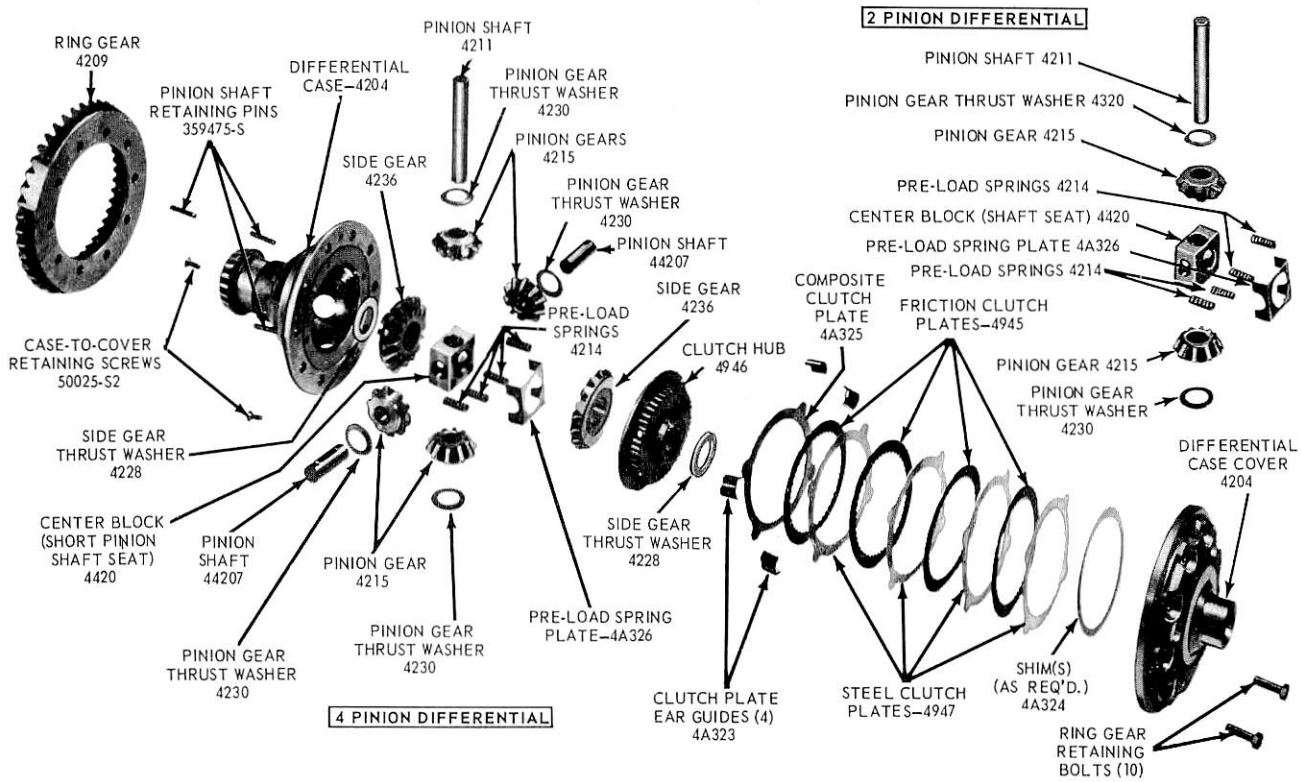

FIG. 1 Ford Traction-Lok Differential—Disassembled

ADJUSTMENTS

No in-vehicle adjustments are possible on this unit. Refer to the applicable axle section for Adjustments to the axle in which it is installed.

REMOVAL AND INSTALLATION

Refer to Part 15-10 for removal of this differential which is removed and installed in the same manner as a conventional differential.

DISASSEMBLY AND ASSEMBLY

Removal and Installation procedures for the differential (removable carrier) are the same as the conventional Ford axle, except in the area of the differential case disassembly and assembly which follows:

DISASSEMBLY

1. Remove ten bolts and flat washers securing the ring gear to the differential case assembly. The ring gear must be removed in order to separate the case halves.
2. Remove the ring gear by tapping the gear with a soft hammer or press the gear from the case.
3. Place the differential case in a press to load the case at the bearing journals so that the pre-load of the springs is overcome (approx. 1,500 lbs). **If a press is not available, two 7/16 inch bolts and nuts can be used in the ring gear mounting holes (one on each side) to compress the case halves together and overcome preload spring tension.** Then, while the case is still under pressure, loosen the two Allen or Phillips head screws which hold the case halves together until one or two threads of the screws remain engaged. Remove the case assembly from the press. Tap on the cover to spring it loose; then, remove both screws.
4. With the cover facing down, lift off the case. Remove the pre-load spring plate and four pre-load springs.
5. From the cover remove the side gear, four clutch plate ear guides, clutch hub, friction and steel clutch plates and shim(s).
6. With a suitable drift, drive out the pinion shaft lock pins from the case.
7. With a brass drift, drive out the long pinion shaft from the case. Drive from the end opposite the lock pin hole.
8. Remove the two short pinion shafts using a drift, driving each shaft from the center outward. Lift out the center block, then remove the pinion gears, thrust washers and side gear and thrust washer.
9. If the differential bearings are removed, the bearings can be installed in one of the following ways:
   a. With the differential case and cover completely assembled.
   b. On the case or cover when disassembled. However, when pressing the bearing on the cover, a block of wood or fiber must be used as shown in Fig. 2 in order to avoid damage to the cover.

ASSEMBLY

1. **Lubricate all parts with C9AZ-19580-A lubricant during assembly.**
2. Mount the differential case in a soft jaw vise and place a side gear thrust washer and side gear in the counterbore of the case.
3. Install the pinion thrust washers and place the pinion gears on the side gear aligning the holes in the washers and gears with the holes in the case.
4. Install the center block so that the shaft holes are aligned with the holes in the pinion gears and case. **The center block has two machined sides and two rough sides.**
5. With a brass drift, drive in the long pinion shaft from the outside of the case aligning the lock pin holes in the shaft with the holes in the case. **The center block should be positioned so the long shaft is driven through the rough side and short shafts driven through the machined side (Fig. 3).**
6. With a suitable drift, install the shaft lock pins. Make sure the pinion and side gears move freely.
7. Place the four pre-load springs in the holes provided in the center block.
8. Position the pre-load plate over the four springs, making sure the springs are properly seated. The pre-load plate straddles the center block over its narrower or machined width.
9. Mount the differential cover in a soft jawed vise or holding fixture.
10. Insert shim(s) of 0.050 total thickness in the cover cavity.
11. Install the composite plate (friction material on one side and steel on the opposite) on the back side of the clutch hub with the friction material against the hub; next, install a friction plate, then steel, friction, steel, friction, steel, friction, and lastly a steel plate (Figures 1 and 4). **When new clutch plates are used, soak the plates in Ford Hypoid Lubricant (C9AZ-19580-A), for approximately 30 minutes before installation.**
12. Place the clutch hub with the clutch plates into the clutch gear cavities in the differential cover. Make sure that the splines on the last friction plate are engaged on the hub.
13. Obtain locally a 5/8 inch x 2 1/2 inch or 9/16 inch x 2 1/2 inch bolt, nut and two 1 1/2 inch outside diameter flat washers approx. 1/8 inch in thickness. These parts are required to compress the clutch pack in order to obtain the proper shim selection. Install a flat washer on the bolt, and place the bolt through the clutch hub. Hold the bolt in position and turn the cover over. Place a flat washer on the bolt and then install the nut. Be sure the washers are centered, and torque the nut 10 or 15 ft-lbs (Fig. 5).
14. Place the shim template tool (T68P-4946-A) in the clutch hub (Fig. 21). Some clearance should be observed between the shim tool and the cover-to-case mating surface. **Using a feeler gauge, determine the exact amount of clearance.** The shim pack thickness chart which will indicate the correct amount of shim(s) to subtract from the 0.050 shim originally installed. **In order to correctly select the proper shim(s), the shim template tool and the chart must be used. Refer to Specifications.**
15. After the proper shim selection is determined, remove the bolt, nut and flat washers. If it is necessary to revise the shim thickness, remove the clutch hub and clutch plates.

16. Install the selected shim(s) in the cover cavity, re-install the components as outlined in Steps 11 and 12.
17. Install the four steel clutch ear guides and side gear.
18. Place both assemblies in a press, and press the two halves together; then, insert the two Allen head or Phillips head screws, and tighten evenly until tight. If a press is not available, any two stock bolts and nuts may be used opposite each other in the ring gear retaining holes to compress both halves.
19. Install the ring gear and ring gear bolts and washers. Tighten evenly and alternately across the diameter of the ring gear. Torque the bolts to 65-80 ft-lbs.
20. Prior to installation of the torque sensitive locking differential into a vehicle, a bench torque check must be made. With currently released locker tools, check the torque required to rotate one side gear while the other is held stationary. The initial breakaway torque may exceed 250 ft-lbs. The rotating torque required to keep the side gear turning with new clutch plates is 100 to 250 ft-lbs. With reused clutch plates, the minimum torque required is 40 ft-lbs. (The torque may fluctuate 10-40 ft-lbs).

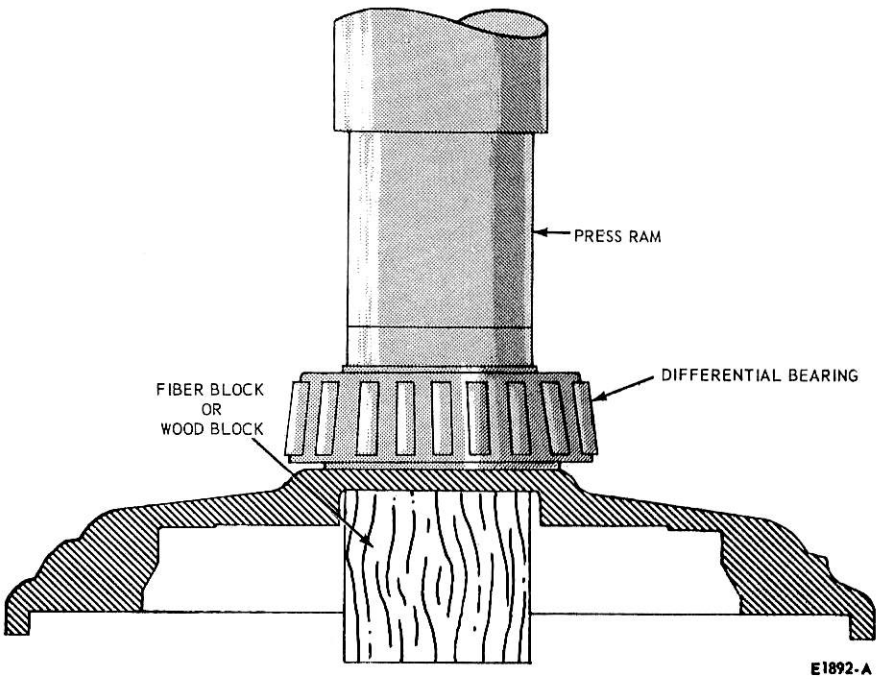

FIG. 2 Installing Differential Bearing

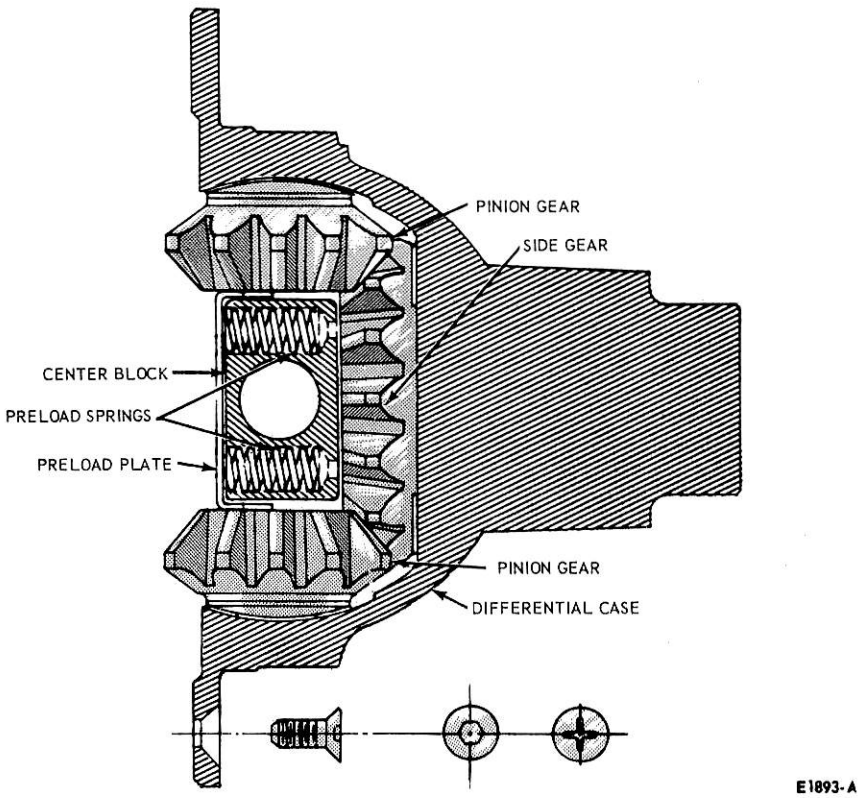

FIG. 3 Center Block and Pre-Load Springs Installation

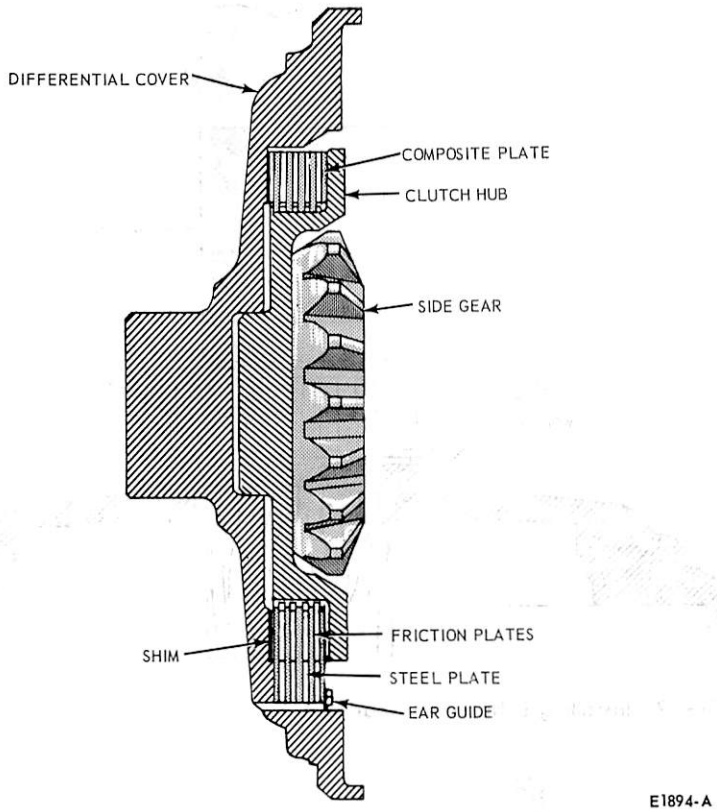

FIG. 4 Clutch Pack Installation

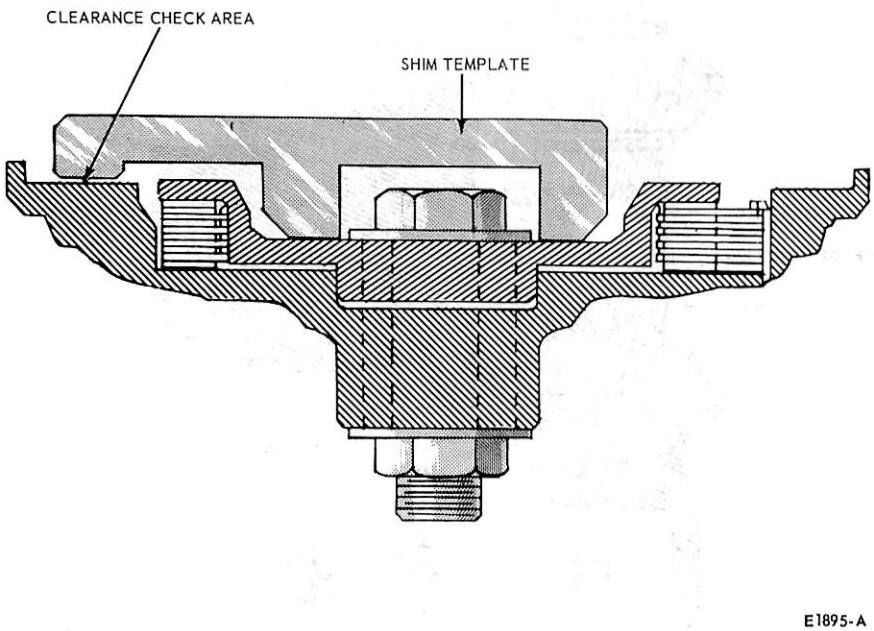

FIG. 5 Shim Template Tool Application

PART 15-41 No Spin Locking Differential - DAP

Applies to F-100, 250, 350 and P-350 4x2 Vehicles Only

COMPONENT INDEX	Page	COMPONENT INDEX	Page
DESCRIPTION	41-01	REMOVAL AND INSTALLATION	41-05
DISASSEMBLY AND OVERHAUL	41-05		

DESCRIPTION

DETROIT AUTOMOTIVE PRODUCTS NO SPIN LOCKING DIFFERENTIAL

The No Spin unit is a true locking differential, basically a system of dog-clutches and cams, containing no power-averaging gearing as in a conventional differential. When moving in a straight line, backward or forward, both wheels must turn, because they are positively locked together at the axle shafts by dog-clutches. This is in contrast to the limited slip type differential, which contains more or less conventional differential gearing with a system of clutches acting as retarders on the normal differential action. In other words, there is no breakaway torque at which the No Spin will release, as in limited slip type differentials.

In order to get differential action, which basically is allowing one wheel to run faster or further than the other while the vehicle is turning, a system of cams disengages the dog clutch on the side that is turning in the greatest circle. Immediately that the wheels resume straight line travel, the dog clutches again engage, locking the axle shafts together at the differential case.

It should be noted that in a No Spin installation, the inside wheel always turns at ring gear speed, because of the direct mechanical lock to the differential case. This is not true of a geared differential system, which averages the power transmitted to the wheels, so that the inside wheel may actually turn slower than the ring gear, while the outside wheel turns faster.

Figure 1 is an exploded view of the standard type No Spin differential.

Figure 2 is a disassembled view of the various No Spin assemblies which can be installed in all Ford trucks. On Ford F-100 and F-250 trucks, the silent type No Spin is usually furnished with a special differential case, whereas the standard type used on the larger trucks drops into the existing case.

Figure 3 shows the relative position of the No Spin unit when installed in the typical axle.

Figure 4 shows the positions of the various parts when the wheels are moving straight ahead and when making right and left turns.

As can be seen in Fig. 4 the basic difference between the silent type and the standard type is the added hold out ring interposed between the driven clutch and the spider, or driving member. When the outside wheel is unlocked, while the vehicle is turning, a normal ratcheting action takes place as the driven clutch on that side walks around the spider. In the standard type, this ratcheting is audible as a clicking noise. The noise is due to the in-and-out motion of the driven clutch teeth and the cam surfaces. The holdout ring, in the silent types, acts to limit the in-and-out motion until the exact instant that the wheels resume straight-ahead travel. As can be seen in Fig. 2, the holdout ring is a simple device. It turns with the spider, but has some lost motion due to the wide slot which indexes it to the spider. When a wheel begins to over run, so that its driven clutch moves outward by cam action, the holdout ring, riding the same center cam, also moves outward and then turns slightly, due to the lost motion built into it at the indexing slot. This action takes up the slack in the mechanism and prevents the in-and-out hunting action of the cam and clutch teeth which produces noise. As soon as the over-running wheel slows down, the hold-out ring reverses its movement, due to the wide indexing slot, and moves inward on the center cam, along with the driven clutch of that wheel. This action is instantaneous.

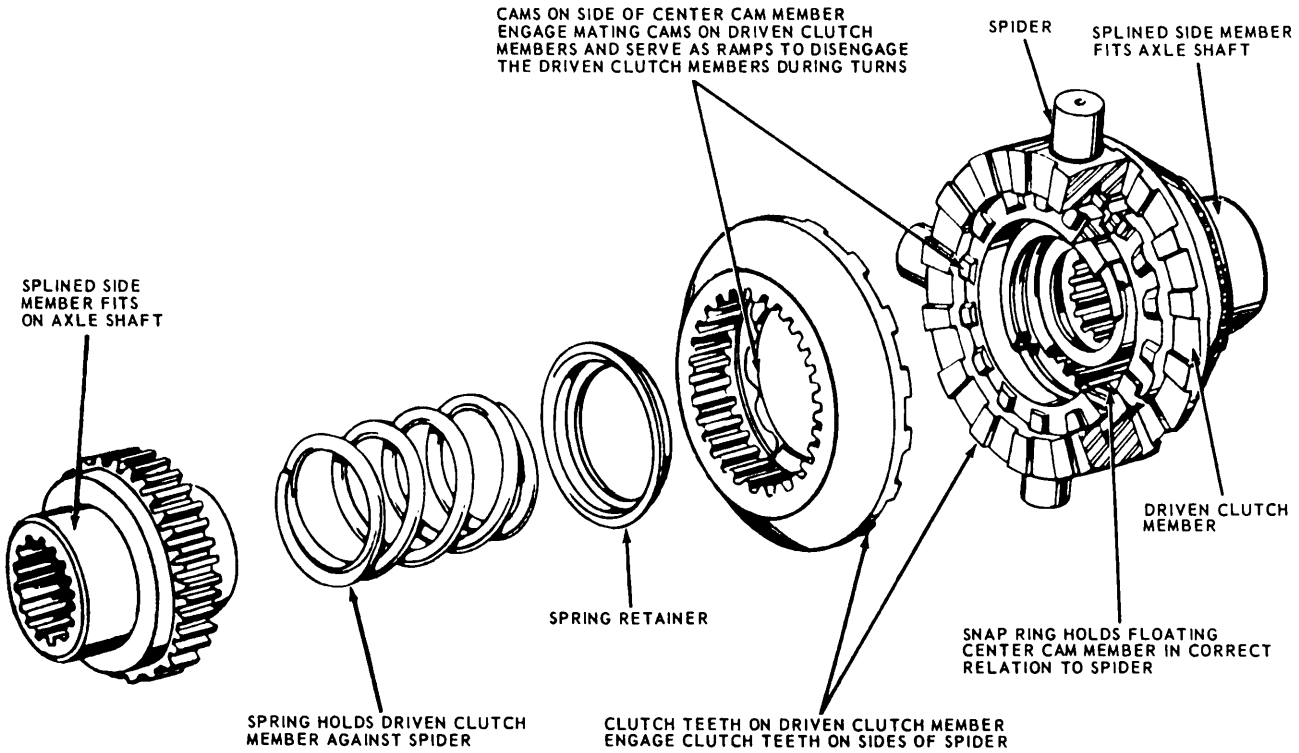

FIG. 1 Exploded View—Standard No Spin Differential

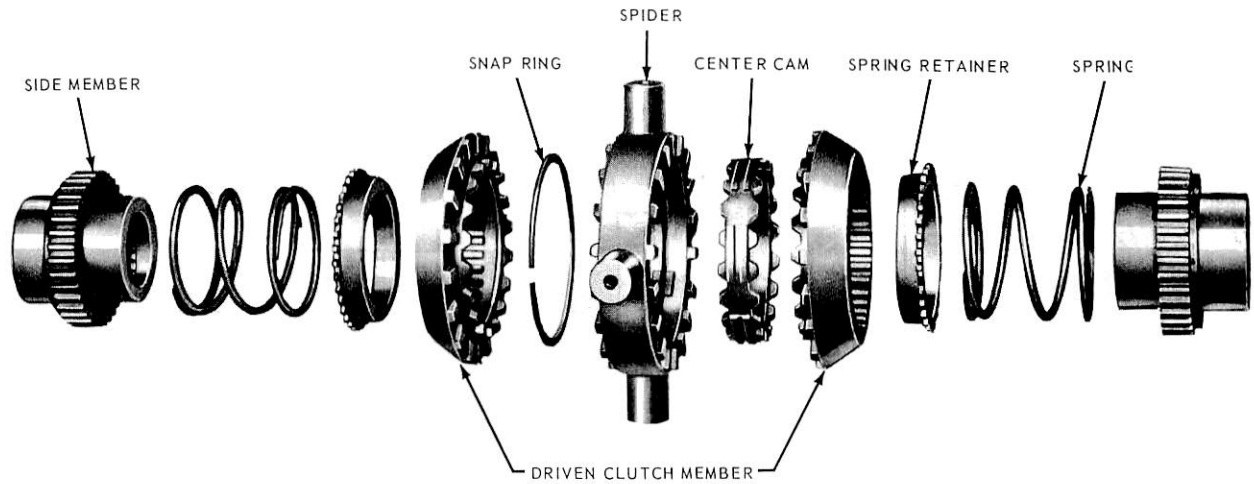

STANDARD-TYPE (No Case Furnished)

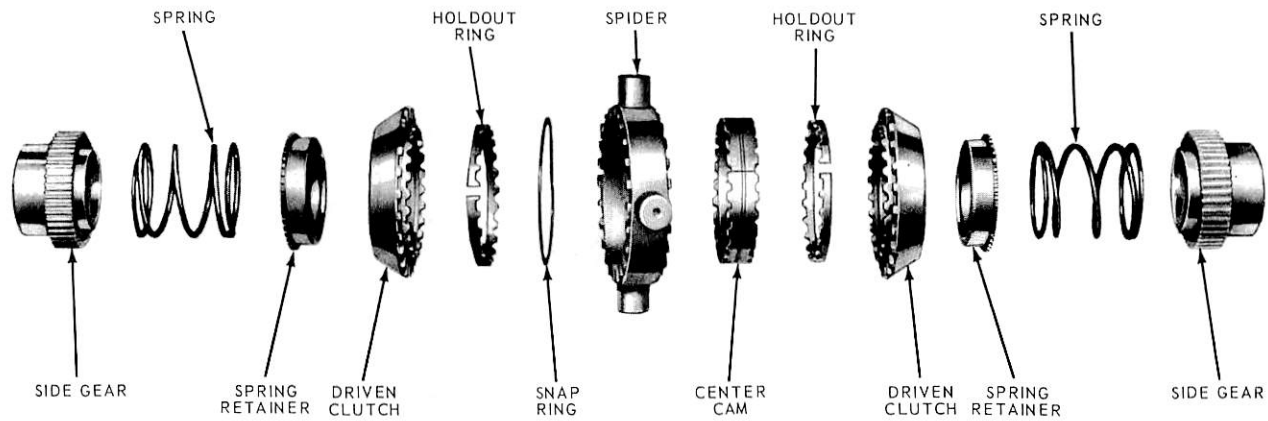

SILENT-TYPE (No Case Furnished)

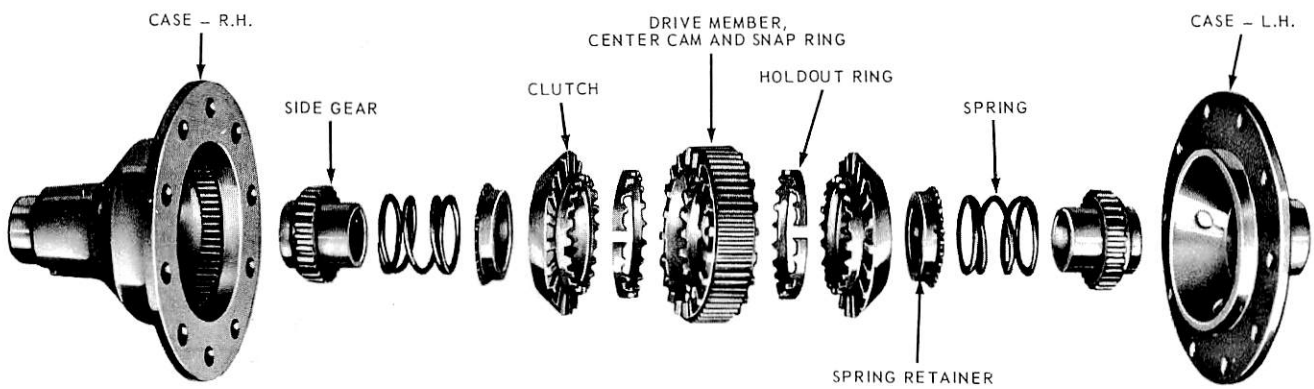

SILENT-TYPE (Splined Drive Member with Case)

FIG. NO SPIN DIFFERENTIALS - DISASSEMBLED VIEWS

E 1528-A

FIG. 2 No Spin Differentials—Disassembled Views

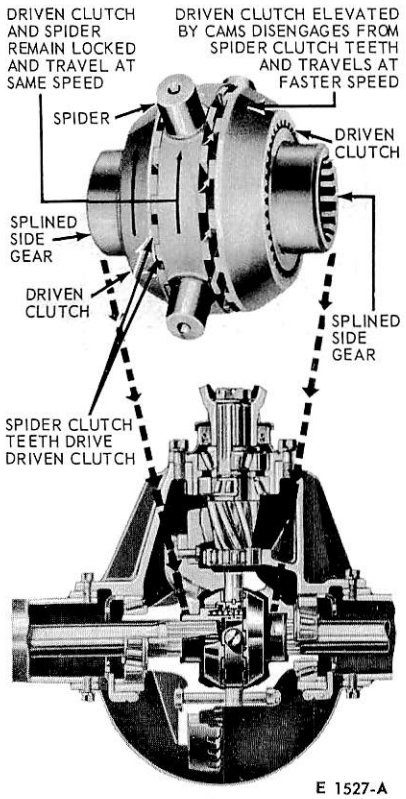

FIG. 3 No Spin Differential Installed

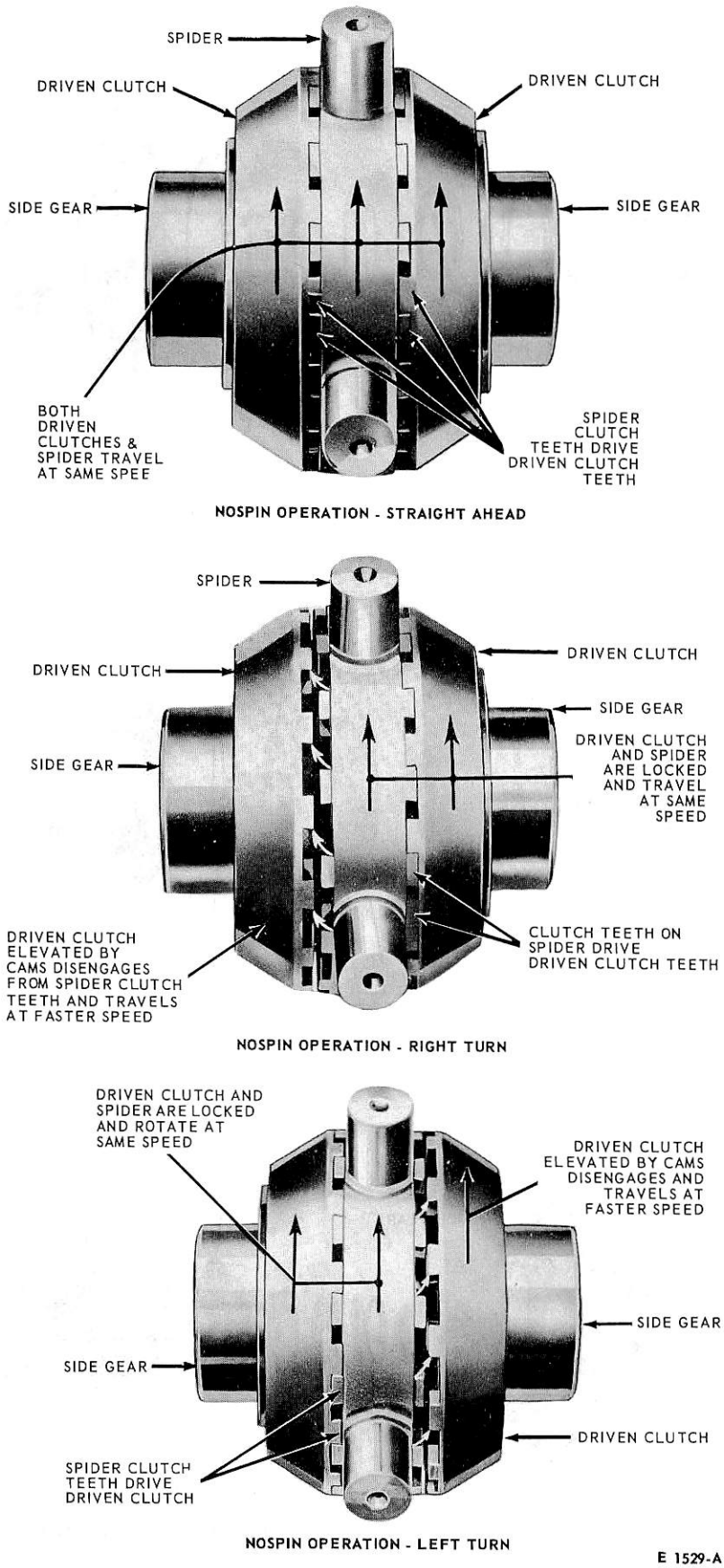

FIG. 4 No Spin Operation

ADJUSTMENTS

No in-vehicle adjustments are possible on this unit. Refer to the applicable axle section for adjustments to the axle in which it is installed.

REMOVAL AND INSTALLATION

Refer to the applicable axle instructions for removal of this differential which is removed and replaced exactly the same as a standard differential.

DISASSEMBLY AND ASSEMBLY

The No Spin locking differential assembly is removed and installed in exactly the same manner as the conventional differential assembly.

DISASSEMBLY

Repairs to the standard No Spin differential will not require removal of the ring gear or differential bearings, since the unit drops into the existing differential case. Certain precautions are necessary for the differential case, because it is spring-loaded. Refer to Removal From the Differential Case, below.

Repairs to the silent type No Spin differential used in the F-100 and F-250 axles require removal of the ring gear, since the special differential case furnished with the unit is assembled by means of the ring gear attaching bolts.

Removal Of Differential Unit From Differential Case

Before removing either the standard or the silent No Spin unit from the differential case, make up a long bolt and nut assembly similar to the one shown in Fig. 5, and clamp the unit together. This will prevent the spring loaded No Spin unit from flying apart when taken from the differential case.

1. Mark the mating halves of the differential case with a center punch so they can be installed in their original position.
2. Remove the ring gear attaching bolts and separate the two case halves.
3. Remove the No Spin unit from the case and carefully release the spring tension by unscrewing the nut and bolt assembly (Fig. 5).

INSPECTION

1. Thoroughly wash all parts in a suitable solvent and dry with compressed air.
2. Inspect the splines on the side gears and clutch members. Remove any burrs or small chipped edges with a stone or electric burr grinder. If large sections of the spline are broken away, replace the part. Check the side gear hubs for fractures.
3. Check the spring heights. They should be within 1/4 inch of the original in the F-100, F-250, F-and P-350.
4. Check for fractures or chipping of the holdout ring and excessive wear of the cam teeth. A badly worn or chipped holdout ring can cause chipping of clutch teeth.
5. Check the center cam for free movement. It must be free to rotate within the limits of the keys in the spider (Fig. 6). It is not necessary to remove the center cam for inspection. In most of the light series units, the spider or drive member is serviced as an assembly with the center cam. If the spider (drive member) or center cam is damaged, the assembly must be replaced.
6. Check the spring retainer (Fig. 4) for fractured splines or spring seat.
7. Check for failure of the hydrogen weld attaching the cam surface of the driven clutch to the clutch (if the two-piece unit is used). If a weld failure has occurred, it will be possible to rotate the cam ring in the driven clutch by tapping lightly on the cams.

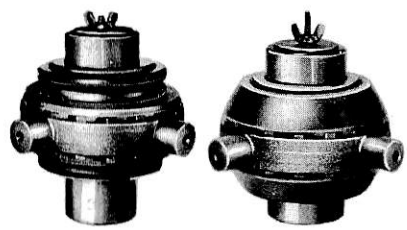

FIG. ASSEMBLY AND DISASSEMBLY CLAMP E 1530-A

FIG. 5 Assembly and Disassembly Clamp—No Spin

8. Inspect the clutch teeth on the spider and driven clutches. Very slight chips can be touched up with a stone. If excessively chipped or rounded, these parts must be replaced. Compare the tooth form with a new part, if available. If a part is replaced due to chipped teeth, always replace the mating part as it may have invisible fractures.
9. Cams on the center cam and driven clutch must not be excessively chipped. A smooth wear pattern up to 50 per cent of the face width is acceptable on the clutch cam and center cam.
10. Check the side gear spline fit on its mating axle shaft. Be sure the splines do not bind.

11. If a case was furnished with the No Spin differential, inspect it according to the standard instructions given in Part 15-01.

ASSEMBLY

Installation of Differential Unit In The Differential Case

1. Assemble the No Spin, being careful to position the spring retainers so that the spring seats inside the cupped section (Fig. 4).
2. Clamp the unit together, using an assembly of bolt, washers and nut similar to Figure 5.
3. Position the No Spin unit in the differential case. Align the punch marks that were made during disassembly to mate the two halves. Install the ring gear and attaching bolts. Torque the attaching bolts to the torque specified for the factory axle which the No Spin replaced.
4. Before installing the No Spin and differential case assembly into the axle carrier, place an axle shaft in each side and rotate. It should be possible to feel the backlash between the clutch teeth (about 5/32 inch). If this backlash cannot be felt, and the side gear is locked solid in the No Spin, remove the unit from the case and check the assembly (Fig. 4).
5. If the correct backlash is present, assemble the differential case into the carrier and follow the instructions in Removal and Installation to complete assembly of the axle involved.
6. When the axle is assembled, fill with the recommended lubricant for the factory-standard axle. **No special lubricant or additive is necessary in the No Spin Installation.**

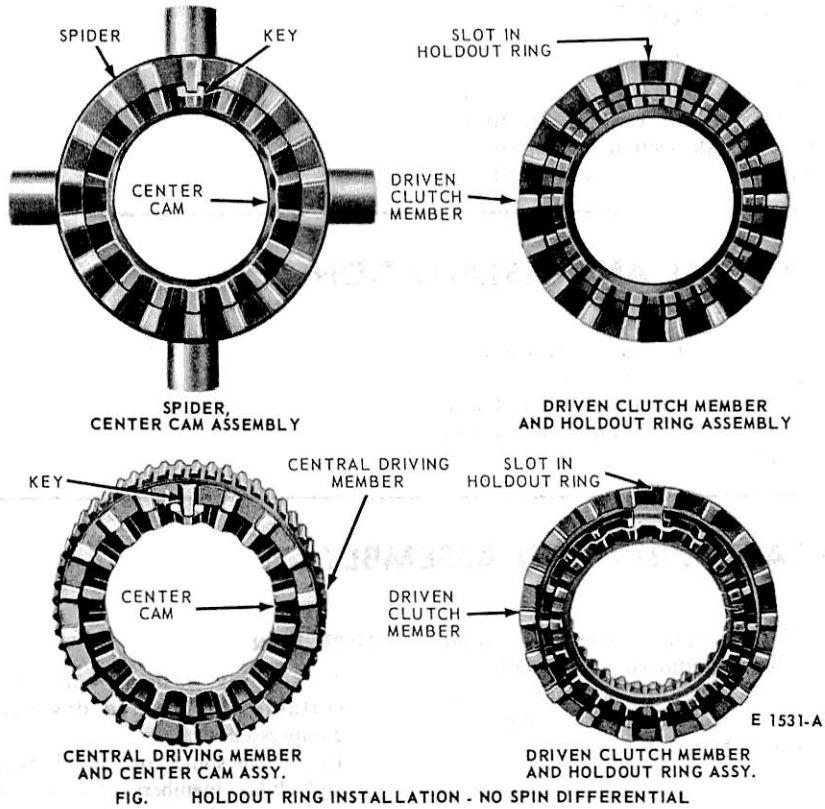

FIG. 6 Holdout Ring Installation—No Spin Differential

PART 15-42 Limited Slip Differential - Dana

Applies to E-300, F-250-350 and P-350

COMPONENT INDEX	Page	COMPONENT INDEX	Page
DESCRIPTION	42-01	REMOVAL AND INSTALLATION	42-03
DISASSEMBLY AND OVERHAUL	42-03		

DESCRIPTION AND OPERATION

DANA LIMITED—SLIP DIFFERENTIAL

The limited-slip Dana Trac-Lok Model 60 (a 2 pinion) axle and the 4 pinion model 70 have a power flow identical to the conventional rear axle, plus a more direct power flow which automatically takes effect as driving conditions demand. This more direct power flow is from the differential case to each axle shaft through clutches.

Figure 1 shows the clutch in a model 60 that connects the differential case to the axle shaft; an identical clutch on the opposite side of the differential connects the differential case to the opposite shaft.

Each clutch plate and disc pack consists of 5 steel plates, set between the case and the side gear ring. Three of the clutch plates, having external lugs, are locked to the differential case by the external lugs. The clutch plate that is installed next to the case is a Belleville spring plate. This spring plate is installed with the concave (dished) side against the case. The remaining clutch discs have internal spline teeth which look to the splined hub on the side gear ring. The side gear ring is, in turn, splined to the axle shaft and acts as a pressure plate against the clutch pack. Since the side gear ring fits against the pinions on the cross shaft (mate shaft), any outward force exerted by the mate shaft and its pinions will press the ring against the clutch pack and thus connect the differential case directly to the axle shaft.

Unlike the cross shafts of the conventional unit the limited-slip differential mate shafts are not rigidly attached to the differential case, nor are they attached to each other. At both ends of the mate shafts there are two flat surfaces so arranged that they form a V which mates with corresponding V shaped surfaces (ramps) cut in the shaft openings of the differential case. The mate shafts are assembled in the case with enough clearance so that when the case tries to rotate the mate shafts and the mate shafts resist rotation, they will be forced to bear against one side of their V ramps. Since the two V ramps of one mate shaft point in a direction opposite to that of the two V ramps of the other mate shaft, the two shafts with their pinions will be forced apart as they resist rotation. This mate shaft movement compresses the clutch pack through the pinion gears and side gear rings.

When the differential case rotates in the opposite direction, the mate shafts will be forced to bear against the opposite side of their V ramps and will again be forced apart to apply against the clutch packs. Therefore, since the ramps are V shaped, the clutches will apply during either forward or reverse operation. Likewise, the clutches will apply whether the power flow is from the differential case to the axle shafts, or from the axle shaft to the differential case.

The amount of compression on the clutch plates will be proportionate to the load applied to the differential case and the resistance to turning offered by each mate shaft. For example, if the vehicle is driven straight ahead and the traction or load on both wheels is equal, both mate shafts will give equal resistance to the rotating differential case and will thus bear against their respective ramps with equal force. This equal movement of the mate shafts will cause them to exert equal pressure against both right and left clutch packs. Both axle shafts will, therefore, be locked directly to the case

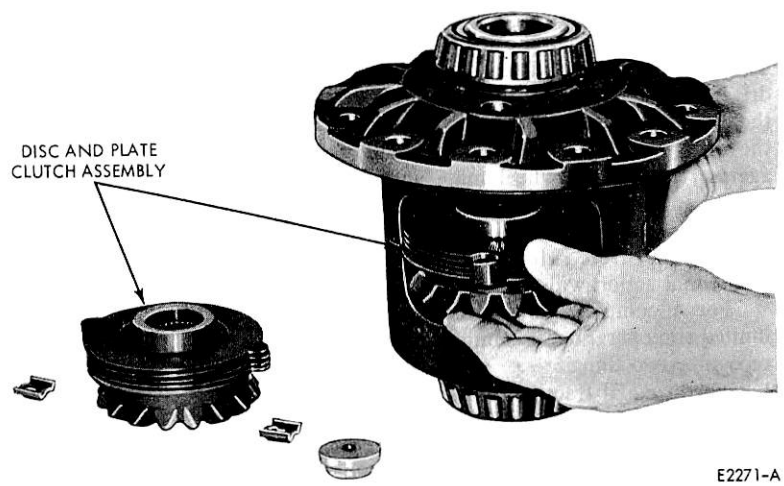

FIG. 1 Limited-Slip Differential (Dana Model 60—Clutch Packs)

with equal force (Fig. 2). Figure 3 shows a cutaway view of a model 70 axle assembly.

Clutch application prevents momentary spinning of one of the wheels when it leaves the road because of a bump, or encounters poor traction because of a slippery road. Under these conditions, even though the traction load is relieved on the one wheel, the acceleration load is simultaneously applied to the differential case as the engine tries to spin the wheel.

When the rear axle is in a turn, the appropriate clutch releases automatically to allow normal differential operation as required. In the straight ahead position, the differential case is driving both wheels and thus applies an equal load against both mate shafts. Since both mate shafts offer resistance to this load, both clutches are applied. On a turn, however, the outside wheel turns faster than the inside wheel. The outside wheel, instead of being driven by the case, now tends to drive the case. With the power thus relieved, the differential case releases its load against the outside wheel mate shaft which, in turn, releases its pressure against the outside wheel clutch pack. With the clutch released, normal differential action will take effect.

For a complete understanding of limited-slip operation, it is important to recognize two things:

1. If with equal traction, both wheels slip, the axle has done all it can do.
2. In extreme cases of differences of traction, the wheel with the least traction may spin after the axle has transferred as much torque as possible to the non-slipping wheel.

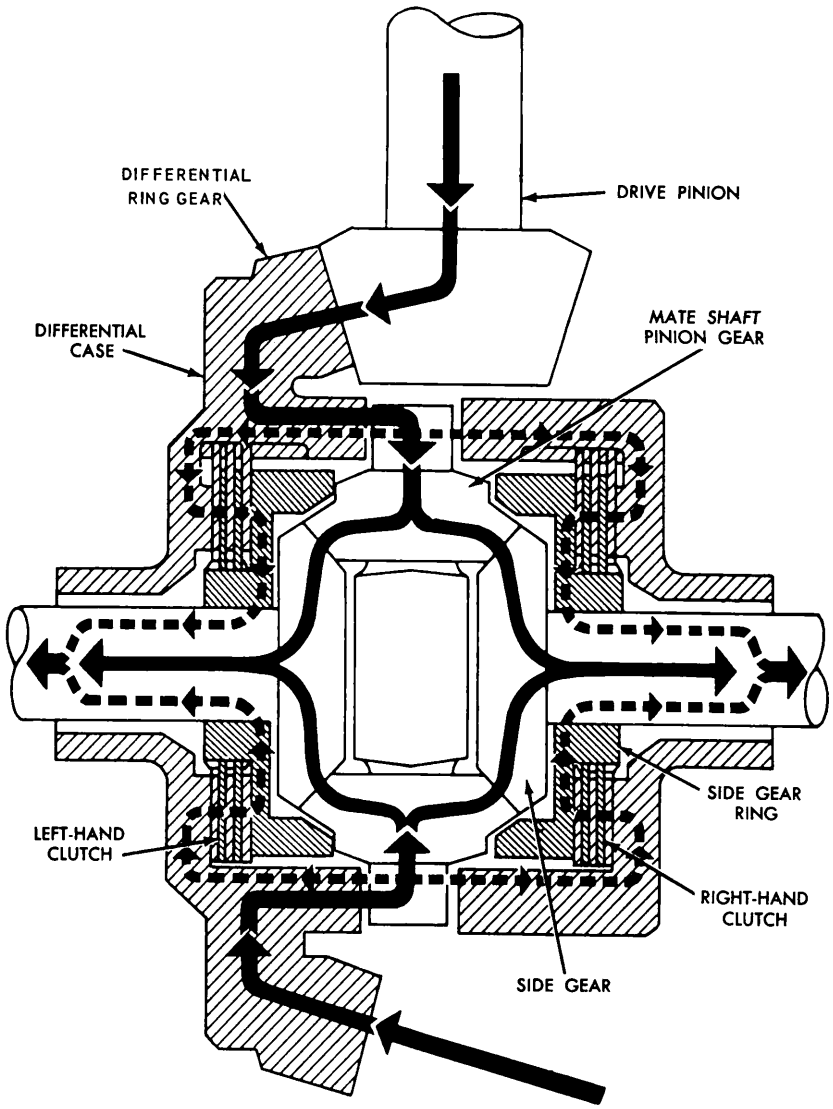

FIG. 2 Limited-Slip Differential Power Flow With Both Wheels Driving

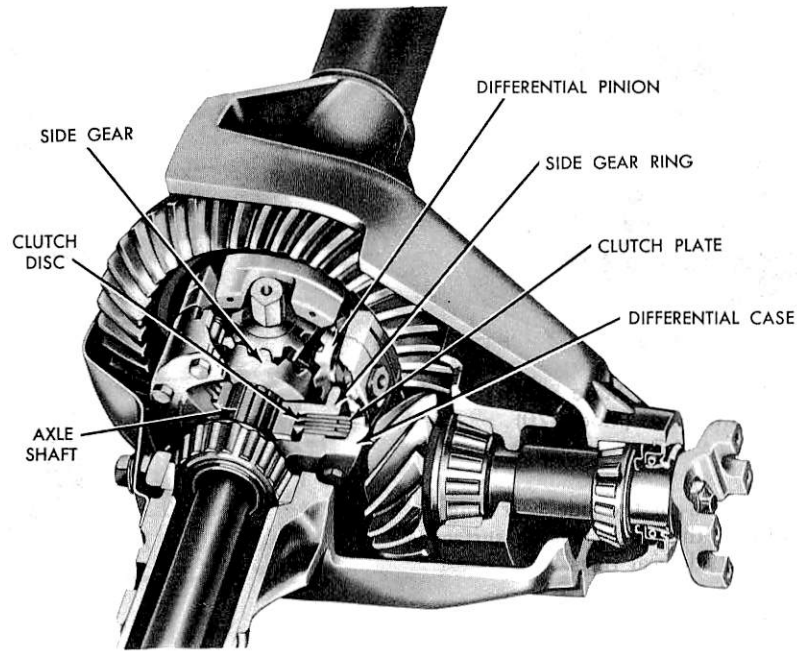

FIG. 3 Limited Slip Differential—Model 70

ADJUSTMENTS

DANA LIMITED-SLIP AXLES

For Adjustment and Repair procedures concerning Dana limited-slip rear axles and for complete specifications refer to Part 15-05.

REMOVAL AND INSTALLATION

DANA LIMITED-SLIP DIFFERENTIAL

For Dana Models 60-3D, 70 or Model 60 limited slip differential rear axle Removal and Installation procedures, refer to Part 15-05.

DISASSEMBLY AND ASSEMBLY

DANA LIMITED-SLIP AXLES

Service procedures for the Dana Model 70 axles with limited-slip differentials are covered in this section. Model 60 procedures are identical to those covered in Part 15-30 for the Model 44 axles, which differ only in size. When following the instructions however there is one exception when removing side gears, washers and limited slip clutch packs.

When doing this operation different tooling is required. Use Kit T71T-4205-A (Part of the 1971 Essential Kit), TKIT-1971-F or FX and also available separately.

The Dana limited-slip differential assembly is removed and installed in exactly the same manner as the conventional differential assembly. For these service procedures refer to Part 15-05. EST-M2C118-A (Friction modifier) is the only authorized additive

which may be used with these axles.

When axle lubricant has been drained for front or rear axle repair (limited slip only), refill axle with the specified quantity of ESW-M2C105-A and add 4 oz. of EST-M2C118-A friction modifier for rear axles and 2 oz. of EST-M2C118-A friction modifier for front drive axles.

DISASSEMBLY

MODEL 70

The differential bearings need not be removed to overhaul the limited-slip differential.

1. Mark the ring gear half and cover half of the differential case so that they can be reassembled in the same relative positions. Mark the pinion mate shafts and their corresponding ramps so that they too can be reassembled in the same positions (Fig. 4).
2. Clamp the differential assembly in a soft-jawed vise and loosen but do not remove the bolts that hold the case halves together.
3. Place the differential assembly on the bench with the ring half of the case down. Remove the case attaching bolts, and then remove the cover half of the case (Fig. 5) on model 70 differentials.
4. Remove the upper mate shaft, side gear, side gear ring, and clutch pack (Fig. 6). Keep these parts with the cover half of the case so that they can be installed in their original positions.
5. On model 70 differentials remove the corresponding parts from the drive gear half of the case.
6. On all models clean all parts thoroughly and dry with compressed air.
7. Inspect the clutch plates and discs for cracks, excessive wear, and distortion. Both the discs and the plates, except the two Belleville spring plates should be flat. Any dished plates or discs, other than the spring plates, must be replaced. In the event that one or more of the plates, discs, or spring plates or discs need replacing, it is suggested that the entire stack of plates, discs, and spring plates or discs on each side be replaced.

   Inspect all other parts and replace any part that appears to be worn or damaged (Fig. 7).
8. Inspect the pinion mate shaft surfaces and the ramp surfaces on the case for excessive wear or pitting.
9. Inspect the side gear and pinion gear teeth. Inspect the pinion gear races that bear on the side gear rings. Inspect the corresponding surface on the side gear rings.

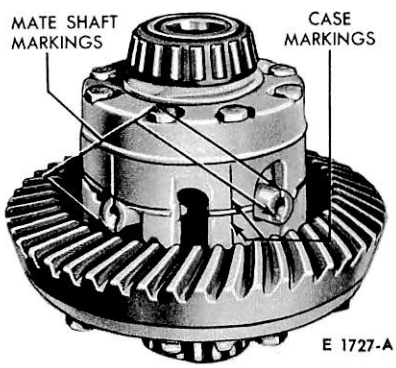

FIG. 4 Case and Mate Shaft Markings (Model 70)

ASSEMBLY

1. Place the side gear ring from the drive gear half of the case on a pinion flange (Fig. 8) or something similar, so that it is about 4 inches above the bench. Coat the clutch plates with axle lubricant.
2. Refer to Fig. 8 and assemble the parts in the order indicated for the particular axle model being repaired.
3. Place the ring gear half of the case over the clutch pack and side gear ring. Make sure that the clutch plate lugs enter the slots in the case and that the case bottoms on the clutch pack (Fig. 8).
4. Grasp the flange and the case to hold the assembly together, and then turn the case half upside down.
5. Place the proper side gear in the side gear ring.
6. Install the axle shaft spacer in the cross shaft, see Fig. 8 for proper placement of the spacers.
7. Place the mate shaft and pinions on the side gear ring (Fig. 9). Align the mate shaft and case markings.
8. Install the cover half mate shaft and pinions. Align the point markings.
9. Place the side gear on the pinions, and then place the side gear ring on the side gear and pinions.
10. Assemble the clutch pack on the side gear according to the arrangement shown in Fig. 10. Align the clutch plate lugs, and install all parts in the case.
11. Place the cover half of the case over the assembly (Fig. 5). Align the case mark made before disassembly.
12. Install all the case bolts and turn each one on a few threads. Using both axle shafts, align the splines of the side gear and the side gear ring (Fig. 6) on both sides of the case. With the axle shafts in position, torque the case bolts evenly and alternately to 35-45 ft-lbs (Fig. 11).
13. Remove the axle shafts. **If the assembly has been properly assembled, each pinion mate cross shaft should be tight on its ramp; or, in the event there is clearance between the cross shaft and the ramp, it should be not more than 0.010 inch and be equal at all four cross shaft ends.**

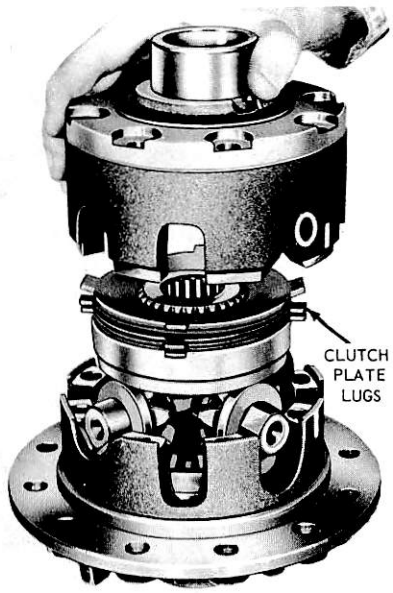

FIG. 5 Removing Cover Half of Case

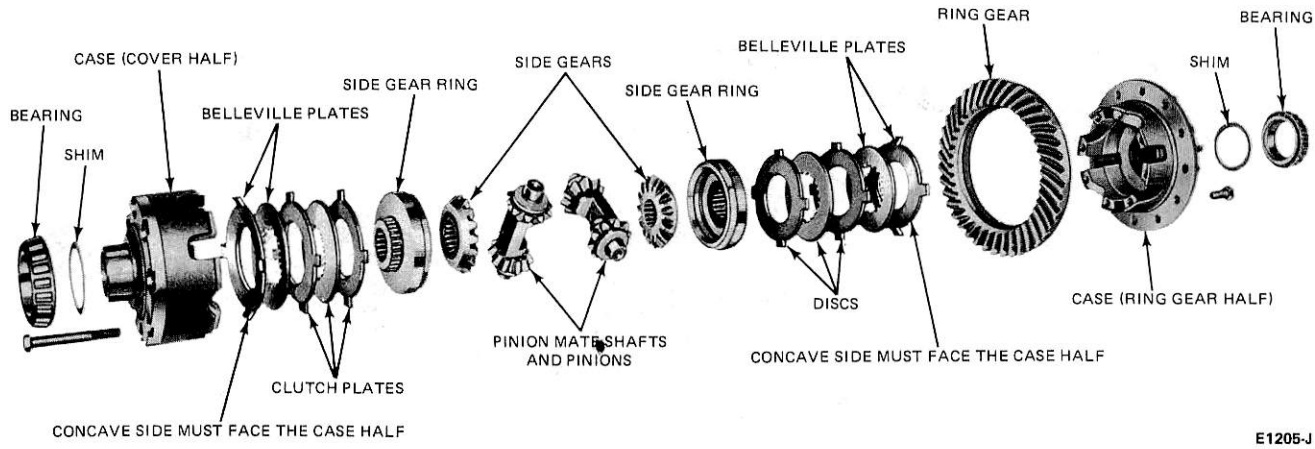

FIG. 6 Limited-Slip Differential Disassembled (Model 70)

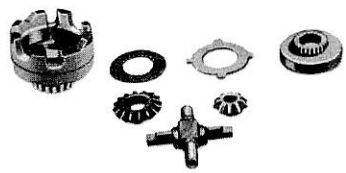

FIG. 7 Components to Check for Excessive Wear or Scoring

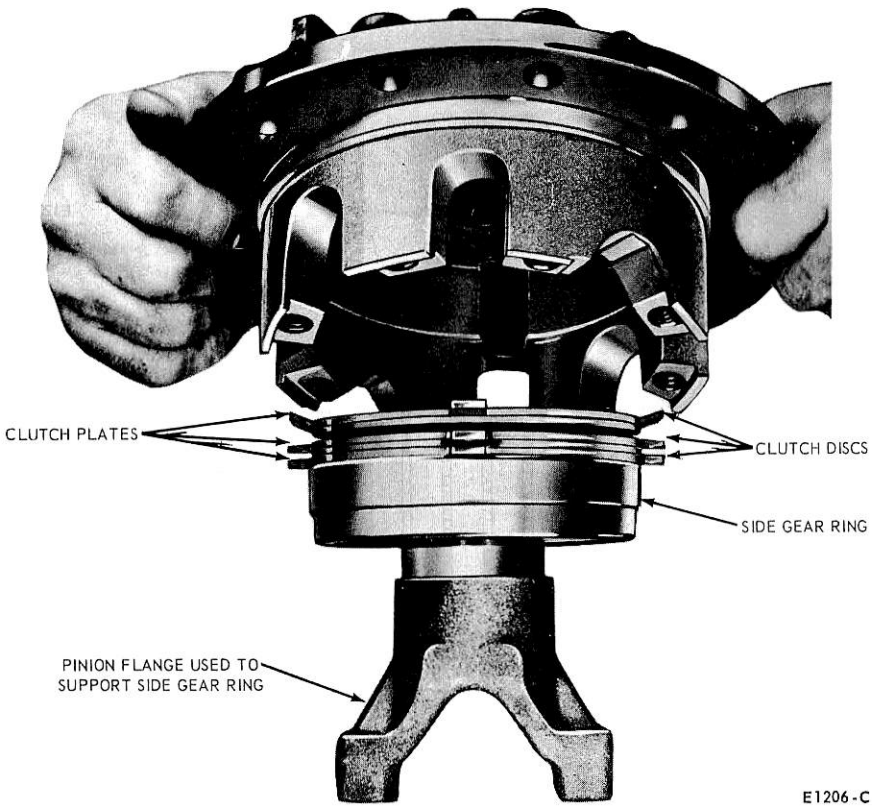

FIG. 8 Clutch Installed in Drive Gear Case Half—Model 70

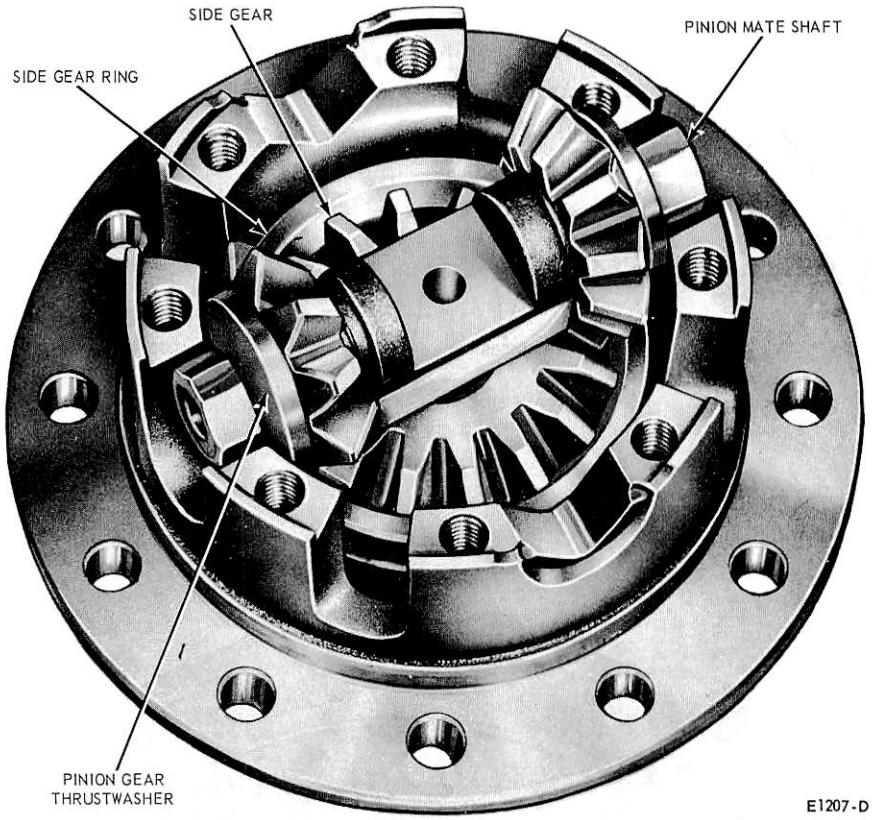

FIG. 9 Mate Shaft Installed—Model 70

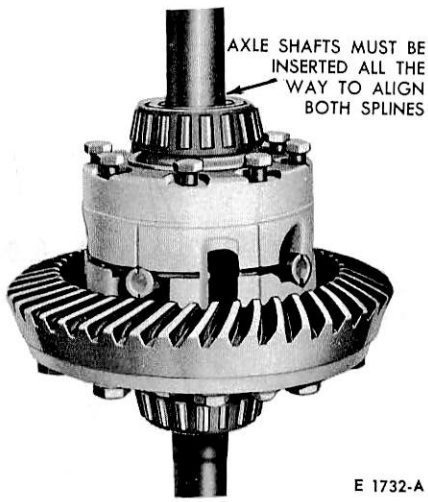

FIG. 11 Spline Alignment of Side Gear and Side Gear Ring

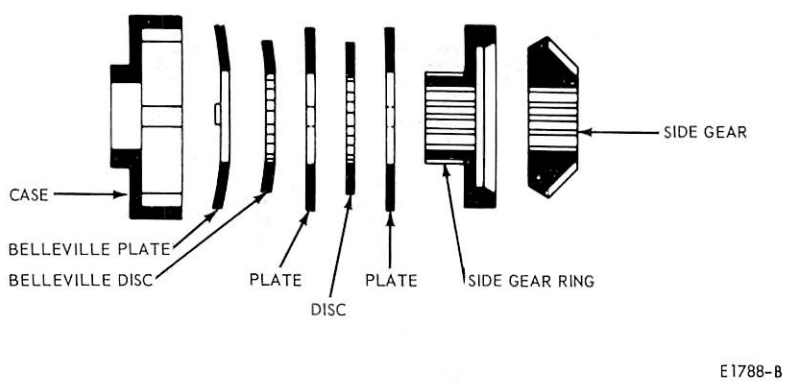

FIG. 10 Plate and Disc Arrangement—One Side— Model 70—Limited Slip

PART 15-50 Tandem Axles—Eaton

Applies To 800-9000 Series Trucks

COMPONENT INDEX	Page	COMPONENT INDEX	Page
AIR SHIFTER VALVE		OUTPUT SHAFT	
Removal and Installation	50-04	Disassembly and Overhaul	50-07
DESCRIPTION	50-01	PINION AND DIFFERENTIAL	
		Disassembly and Overhaul	50-07
INPUT SHAFT AND COVER		POWER DIVIDER AND CARRIER	
Disassembly and Overhaul	50-07	Disassembly and Overhaul	50-06
		Removal and Installation	50-05
LOCK-OUT SHIFT CYLINDER		SPECIFICATIONS	50-10
Removal and Installation	50-03		
		TWO-SPEED TANDEM CONTROL SYSTEM	
LOCK-OUT SWITCH			
Removal and Installation	50-04	Removal and Installation	50-04

DESCRIPTION

A typical Eaton Tandem Axle assembly is shown in Fig. 1.

POWER DIVIDER AND CARRIER D-SERIES AXLE

The power divider used on the D-Series axles does not have an idler shaft assembly. The input and output shafts are arranged to provide a straight-through drive to the rearward axle. The two shafts are connected only through the power divider differential (Fig. 2).

The power divider input shaft drives the power divider differential spider. The pinions are in constant mesh with front and rear differential side gears. The front differential side gear is integral with a helical gear, which is in constant mesh with a gear splined to the forward axle drive pinion. The front helical side gear is normally free-running on the input shaft. The rear differential side gear is splined to the output shaft.

In normal operation, the power divider differential pinions drive the

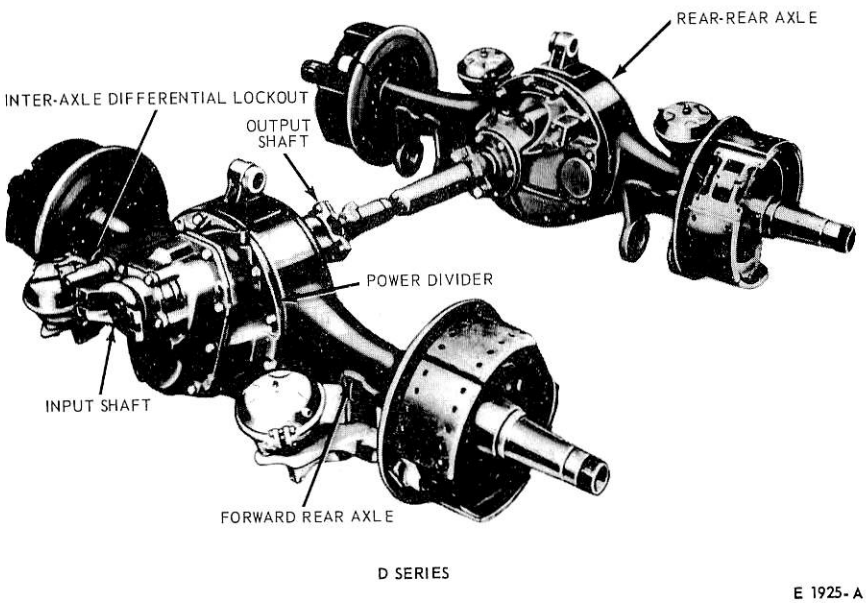

FIG. 1 Typical Eaton Tandem Axle Assembly

front and rear side gears at the same speed. The front helical side gear drives the forward axle drive pinion. The rear side gear drives the rearward axle drive pinion through the output shaft and inner-axle drive shaft.

In the D-Series axles there is no reduction in the power divider unit. In the double reduction units, a second reduction is obtained by using a planetary two-speed differential in which the sun (sliding clutch) gear is permanently locked in the low-speed position.

In the 2-speed units, the air shift unlocks the sun gear from the carrier housing and locks it to the differential case for high-speed operation.

The 8.38:1 ratio, for example, is obtained by a 6.14:1 reduction between the pinion and ring gear and a further planetary gear reduction of 1.364:1 between the ring gear and the axle shafts (except model 30D, which has a 1.390:1 reduction).

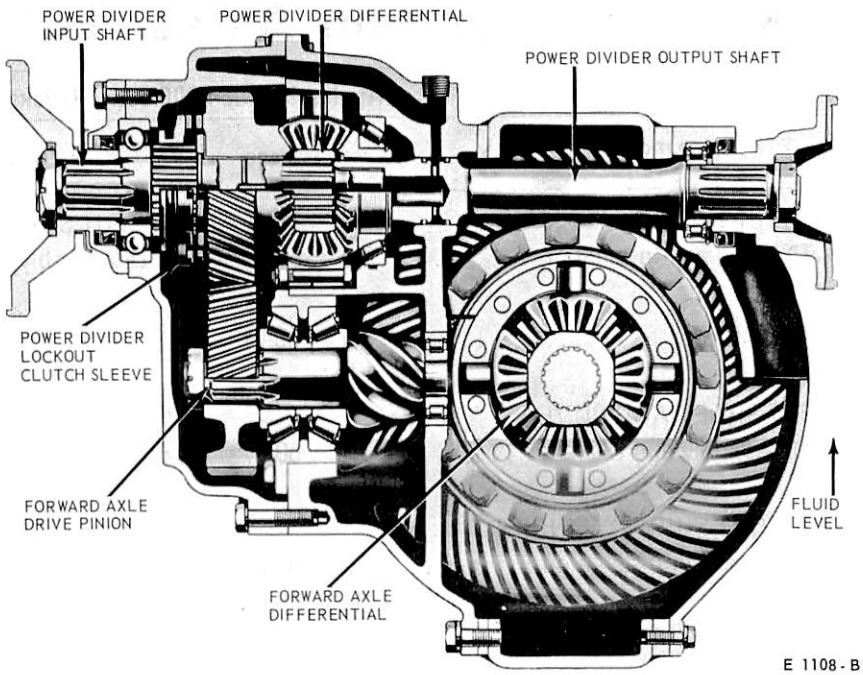

FIG. 2 Inter-Axle Differential Power Flow— D-Series Axles

POWER DIVIDER LOCKOUT CONTROL SYSTEMS

During normal vehicle operation, the power divider differential lockout is maintained in a disengaged position by a spring. In the case of straight air there is no air supplied to the lockout valve unless the axle is in the low range thus maintaining the lockout in the disengaged position. When the lockout mechanism is engaged by activating a straight air valve, the sliding clutch gear engages the forward helical gear on the input shaft, locking out power divider differential action, and providing positive drive to both axle units. Thus, equal driving power to the drive pinions in the forward and rearward axles is provided, and maximum traction is available for pulling through deep sand, mud, or snow.

The lockout mechanism must be engaged only when the truck is standing still with the wheels not rotating. It should be engaged only as long as extra traction is needed.

Continuous, unnecessary engagement of the lockout mechanism will result in excessive tire wear, and may cause damage to the axles when tires are of different diameters.

STRAIGHT AIR SYSTEM

The lockout will operate only in **LO range, when the shift unit actuating lever depresses the lockout control valve. This permits air pressure to be applied to the power divider lockout cylinder (Fig. 3). The air pressure against the piston causes the power divider differential clutch sleeve to lock out the differential.**

When the control switch is turned to the Lockout Disengaged position, the solenoid air valve closes and releases the air pressure from the cylinder. With air pressure cut off, the compressed spring disengages the sliding clutch sleeve and holds it in the unlocked position in the power divider.

2-SPEED TANDEM DRIVE AXLE

DESCRIPTION

The Eaton 2-Speed Tandem Drive Axle consists of two planetary-type, two-speed axle units, coupled with a power divider and an inter-axle differential.

The over-all operation of this axle system is the same as any other two speed tandem installation using an inter-axle differential.

2-SPEED TANDEM AXLE STRAIGHT AIR SHIFT SYSTEM

DESCRIPTION

This shift system basically includes: (1) A 2-position, manually operated air shifter valve, (2) a quick release valve, and (3) two axle shift units (Fig. 3). The entire system operates at reservoir tank air pressure. On vehicles not equipped with automatic safety brakes, an ignition-controlled solenoid valve exhausts the system, which downshifts the axles when the ignition switch is turned off. The electrical circuit is protected by a circuit breaker.

In operation, the air shifter valve (in gear shift knob) supplies air through the quick release valve to the axle shift units. Air pressure in the shift units shifts axles to high range. To shift axles to low range, air pressure is exhausted at shifter valve, which exhausts air pressure at quick release valve, following shift units to return to low.

"LO" RANGE OPERATION

Shifter knob is in "LO", shifter valve is closed and no air pressure is present in air lines to either shift unit. Axles are held in low range by shift unit return springs.

"HI" RANGE OPERATION

Shifter knob is in "HI", shifter valve is opened to allow air pressure through quick release valve to both shift units. Both axles are held in high range by shift unit air pressure.

SPEEDOMETER ADAPTER

For vehicles with transmission drive speedometer, the system incorporates a speedometer adapter. Operation is controlled by an electrical switch (normally closed...opened by air pressure) mounted in the air line near the quick release valve.

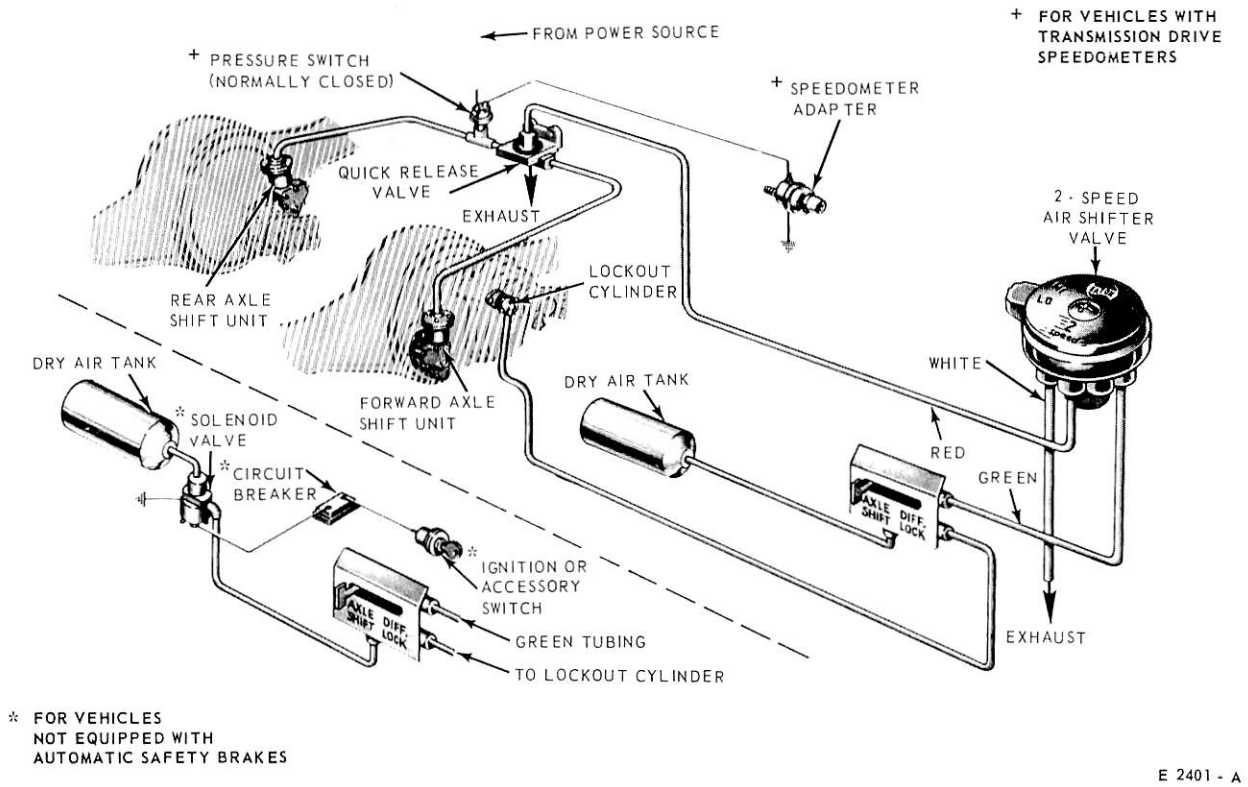

FIG. 3 Two-speed Tandem Axle Straight—Air Shift System

ADJUSTMENTS

REAR WHEELS, BEARINGS AND SEALS

Axle shafts, wheel hubs, bearings, and grease seals can be replaced, lubricated, or adjusted without removing the differential carrier assembly from the axle housing or the rear axle assembly from the vehicle. See Part 15-01, Testing for procedures.

AIR LOCKOUT SHIFT CYLINDER REPAIR

1. Remove the cover retaining nuts, lock washers and cover from the shift cylinder body. Discard the cover grommet. Remove the nut, flat washer, and grommet from the push rod.
2. Remove the cap screws, lock washers, shift cylinder body assembly and gasket from the case cover. The shift cylinder body assembly includes a piston, piston grommet or O-ring, two felt oilers and a filter (Fig. 4).
3. Remove the compression spring from the push rod. Remove the retaining screws and remove the divider cover; then remove the sliding clutch and shift fork assembly from the case cover.
4. Inspect the parts for excessive wear or damage and replace as required.
5. Place the felt seal and seal retainer in the recess in the case cover.
6. Assemble the shift fork and sliding clutch to the case cover as follows: partially insert the push rod in the case cover, engage the sliding clutch with the shift fork, and then push the entire assembly into the correct mounting position in the case cover.
7. Place the compression spring, gasket, and shift cylinder body over the push rod and on the case cover. Install the retaining screws and lock washer.
8. The piston felt oilers should be soaked in SAE 30 oil for one hour before assembly.
9. Install the felt oilers and O-ring on the piston and insert the piston assembly into the shift cylinder body and onto the push rod. Secure the piston to the rod with the flat washer and nut.
10. Install a new grommet on the cylinder cover, install the cover to

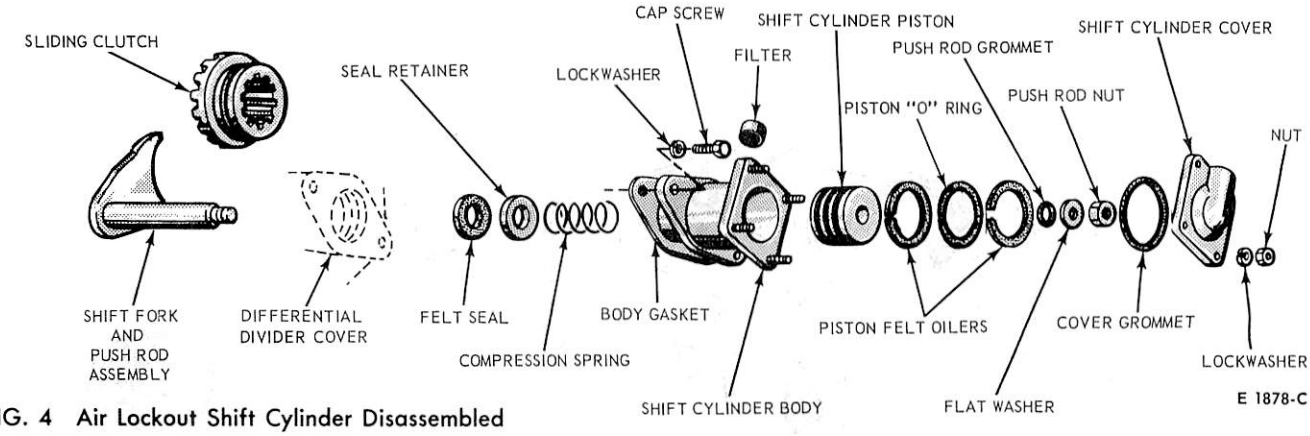

FIG. 4 Air Lockout Shift Cylinder Disassembled

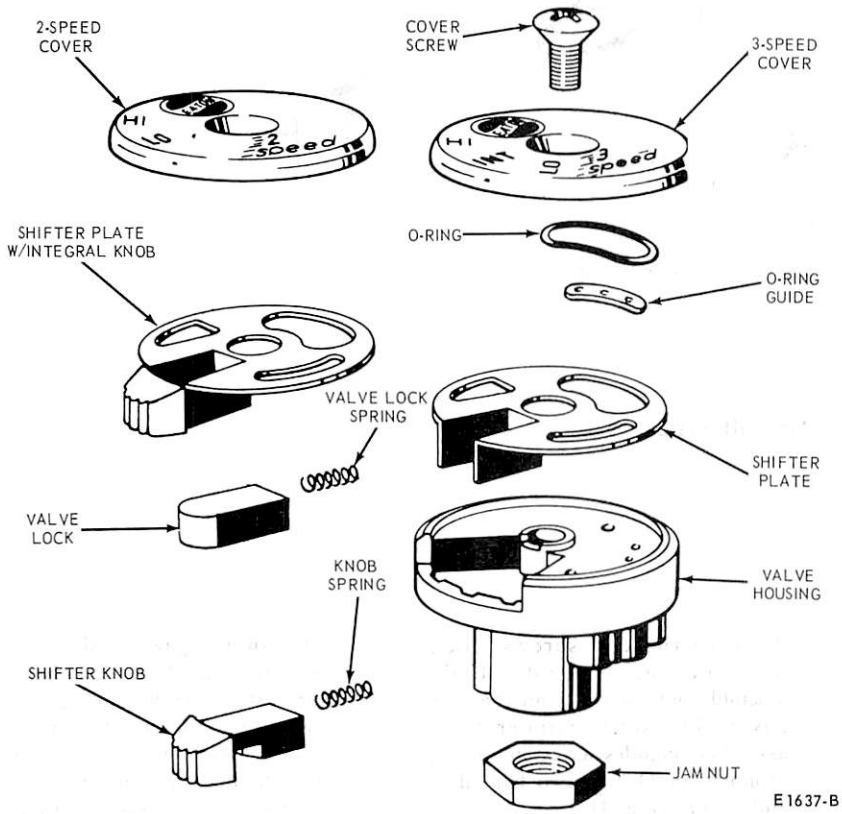

FIG. 5 Exploded View of 2-Speed Straight Air Shift Valve

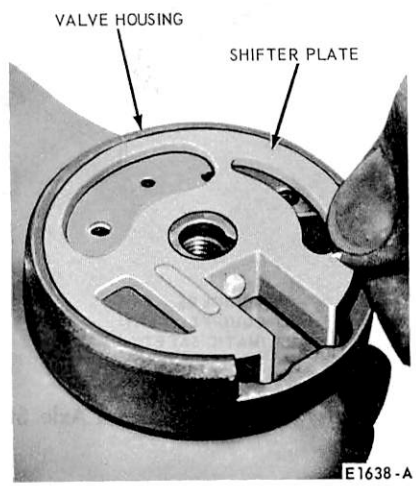

FIG. 6 Installing Shifter Plate—2-Speed Straight Air

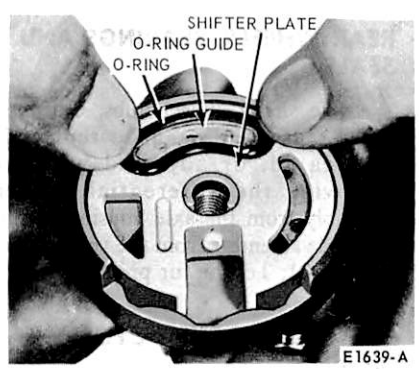

FIG. 7 Installing Guide and O-Ring—2-Speed Straight Air

the cylinder body, and secure with the retaining nuts and lock washers. Install the divider cover.

2-SPEED TANDEM CONTROL SYSTEM REPAIR

SPEEDOMETER ADAPTER

The speedometer adapters are lubricated and sealed for the life of the unit. No maintenance is required. Replace any damaged unit. It is not necessary to replace both units if only one has failed.

LOCKOUT SWITCH (AT SHIFT UNIT)

Replace the lockout switch as an assembly.

AIR SHIFTER VALVE REPAIR

Removal

1. Disconnect air lines from the bottom of the control switch.
2. Unscrew the switch from the gear shift lever.

Air supply to valve must be shut off before the valve is serviced. The shifter valve can be disassembled for service without removing the assembly from the gear shift lever.

Disassembly

1. Remove screw from cover, then lift off cover and remove shifter knob, knob spring, shifter plate, O-ring guide and O-ring from valve housing (Fig. 5).
2. If housing requires replacement, disconnect air lines, loosen jam nut, then unscrew housing from shift lever.

The shifter valve should be disassembled, inspected, cleaned and lubricated every 50,000 miles. Lubricate all moving parts with **barium-base grease. No other type lubricant should be used.**

Assembly

If housing was removed, install jam nut on shift lever. Thread housing on shift lever and tighten jam nut. Connect air lines (Fig. 3).

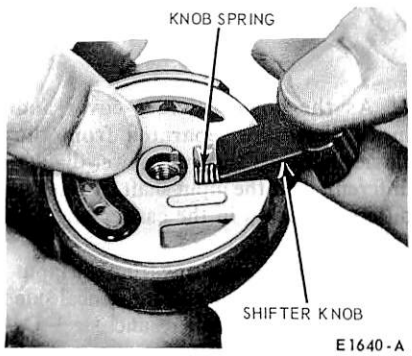

FIG. 8 Installing Spring and Shifter Knob—2-Speed Straight Air

1. Place shifter plate in mounting position on valve housing (Fig. 6).
2. Preassemble guide and O-ring, then place this assembly in mounting position in shifter plate (Fig. 7).
3. Hold shifter plate in position with one hand, then install spring and shifter knob. Install cover and fasten with screw (Fig. 8).

REMOVAL AND INSTALLATION

REAR AXLE HOUSING

If the forward or rear axle housing is to be removed from the vehicle, refer to Tandem Axle Suspension, Parts 14-40 and 14-41.

POWER DIVIDER AND CARRIER D-SERIES AXLE REMOVAL

1. Block the wheels to prevent the vehicle from moving.
2. Drain the power divider and axle housing.
3. Remove the vacuum or air shift components as equipped; then remove the lockout cylinder and mounting bracket from the power divider.
4. Disconnect the drive shaft at the input shaft.
5. Remove the air brake line from the right-hand forward axle brake chamber and the connector on the axle housing.
6. Remove both axle shafts.
7. Remove the carrier to housing stud nuts.
8. Position a roller jack, with a cradle, beneath the power divider and carrier. Fasten the assembly to the cradle (Fig. 9).
9. Disconnect the inter-axle drive shaft at the power divider output shaft flange.
10. Hold the output shaft flange, and remove the flange nut. Pull the flange.
11. Carefully remove the power divider and carrier from the housing. As the power divider and carrier are moved out of the housing, the output shaft and roller bearing inner race must slide out of straight rollers in the axle housing cover (Fig. 13).
12. Remove the power divider and carrier from under the vehicle.

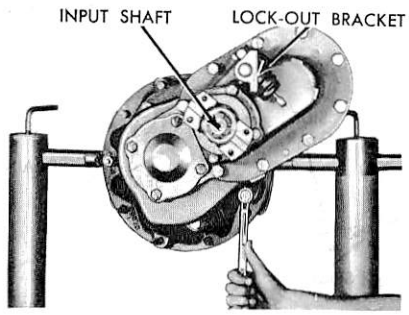

FIG. 9 Removing Power Divider Front Carrier— Typical

Installation

1. **Clean the inside of the axle housing.**
2. Remove the power divider output shaft flange seal from the axle housing rear cover. Remove the flange spacer and the roller bearing from the cover.
3. Mount the power divider and carrier on a roller jack.
4. Place a new gasket on the axle housing. Install the gasket dry to prevent leakage due to creeping caused by sealing compound.
5. Start the carrier housing on the axle housing studs and pull it into position with the stud nuts. Torque the nuts to specification.
6. Install the roller bearing outer race and cage in the housing rear cover. Place the spacer next to the bearing (Fig. 13).
7. Install a new seal in the housing cover for the output shaft flange.
8. Start the flange on the output shaft. **Hold the flange** and pull the flange into position with the flange nut and flat washer. Torque the nut to specification, and install a new cotter pin.
9. Connect the inter-axle drive shaft. Connect the drive shaft at the input shaft flange.
10. Install and connect the power divider lockout unit. Install the air line to the brake chamber.
11. Place new gaskets on the wheel hub studs and install the axle shafts. Torque the stud nuts to specification.
12. Fill the power divider and axle housing with the proper amount and grade of lubricant.

REARWARD AXLE CARRIER—ALL MODELS

For Removal and Installation of the rearward axle carrier, follow the procedures in Adjustments in Part 15-15 (Single-Speed) or Part 15-20 (Two-Speed).

DISASSEMBLY AND ASSEMBLY

DISASSEMBLY OF POWER DIVIDER AND CARRIER— 30D, 34D and 38D SINGLE REDUCTION AXLES

1. Disconnect the drive shaft at the power divider input flange and tie the drive shaft to the frame so it is out of the way.
2. Disconnect the power divider lockout shift control air line or linkage, whichever is applicable.
3. If the input flange nut is accessible on the vehicle with a socket and breaker bar, remove the cotter pin from the nut and remove the hardened washer and flange nut. If the input flange nut is not accessible on the vehicle, remove the power divider cover with the input flange and nut in place. Mount the power divider cover in a floor stand and then remove the input flange, cotter pin and nut. Flange can be held in a vise if desired.
4. Tilt the overhaul stand so that the power divider and carrier are in normal operating position.
5. Remove the power divider cover by removing the 9 cover to carrier bolts. Carefully work the power divider cover off its dowel pins, using a transmission jack to help support the weight of the cover and also to receive the power divider cover when it is removed (Fig. 10).

As the power divider cover and input shaft are separated from the carrier housing, slide the power divider differential off the input shaft so that the differential stays in the carrier housing (Fig. 11).

6. Remove the snap ring from the input shaft and then lift off the helical side gear, thrust washer, and steel D-washer (Fig. 12).
7. Remove the bearing retainer and shim pack (Fig. 12).
8. Manually drive the input shaft and bearing from the rear of the power divider cover.
9. Mark the power divider differential case for proper assembly, then remove the bolts that hold the

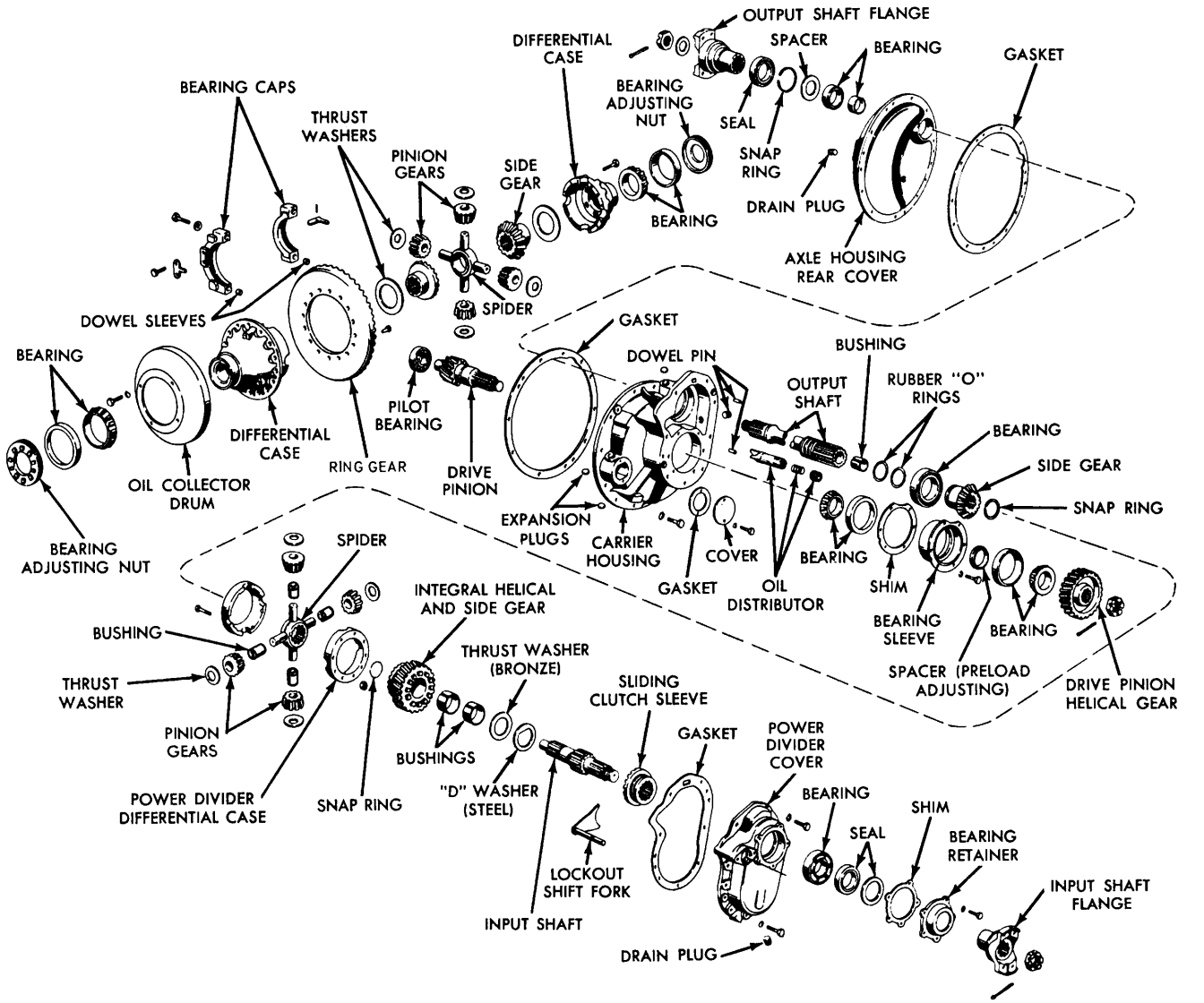

E1142-C

FIG. 10 Power Divider and Carrier—30D and 34D

differential case halves together.
10. Remove the snap ring at the front of the output shaft (Fig. 13) and pull the output shaft toward the rear and out of the side gear. Remove the O-rings from the output shaft.
11. Lift off the side gear and bearing assembly from the carrier housing.
12. Lock the differential drive gear to the carrier housing, and then remove the drive pinion shaft end nut.
13. Remove the helical gear from the drive pinion shaft.
14. Remove the oil distributor (Fig. 14), if so equipped.

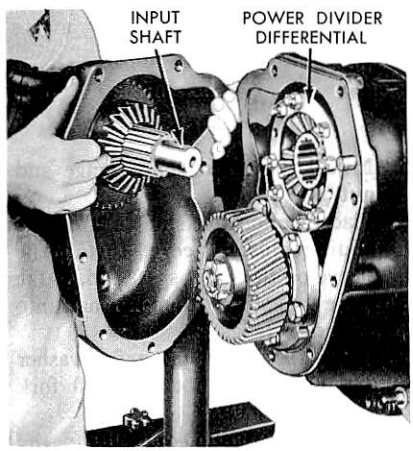

FIG. 11 Removing or Installing Power Divider Input Shaft and Cover

15. Mark the differential bearing adjuster nuts for location, loosen the bearing cap bolts then loosen one adjuster nut to relieve bearing preload.
16. Remove the differential bearing caps, then remove the differential assembly. For service procedures on single-reduction differential assemblies, refer to Part 15-15. For the double reduction type differential, see Part 15-20.
17. Remove the pinion bearing sleeve to carrier bolts. From the pinion pilot end, drive the pinion bearing and sleeve as an assembly out of the front of the carrier housing (Fig. 15). For service procedures on the ring gear and pinion assembly refer to Part 15-01.

ASSEMBLY OF POWER DIVIDER AND CARRIER 30D AND 34D

DRIVE PINION AND DIFFERENTIAL

1. Select the proper shim for the pinion bearing sleeve. Refer to Part 15-01, Testing for SHIM SELECTION.
2. Install the drive pinion and sleeve in the carrier housing (Fig. 16).
3. Install the helical gear on the drive pinion shaft. There is a chamfer on one end of the helical gear hub spline. The chamfered end goes toward the rear of the carrier. Start the nut and hardened washer on the drive pinion shaft.
4. Rotate the carrier housing and install the differential assembly, bearings and caps.
5. Lock the ring gear to the carrier housing, and torque the drive pinion nut to specification. Install the cotter pin.
6. Adjust differential bearing preload and pinion and ring gear backlash as given in Part 15-01.
7. Check pinion and ring gear tooth contact as given in Part 15-01.
8. Install the oil distributor (Fig. 15), if so equipped.

POWER DIVIDER OUTPUT SHAFT

1. Press the tapered bearing on the output shaft side gear.
2. Install two new O-rings on the output shaft.
3. Install the rear snap ring on the shaft; then install the side gear and bearing on the output shaft. Install the snap ring at the front end of the output shaft.
4. Lubricate the bearing, O-rings, and output shaft bushing. Install the assembly in the carrier housing (Fig. 17).

POWER DIVIDER INPUT SHAFT AND COVER

1. Press the bearing on the threaded end of the input shaft (Fig. 12). Coat the outer race of the new bearing with Locktite Sealer, C3AZ-19554-A. This will prevent the outer race from creeping in the bore of the power divider cover.
2. Press the shaft and bearing into the

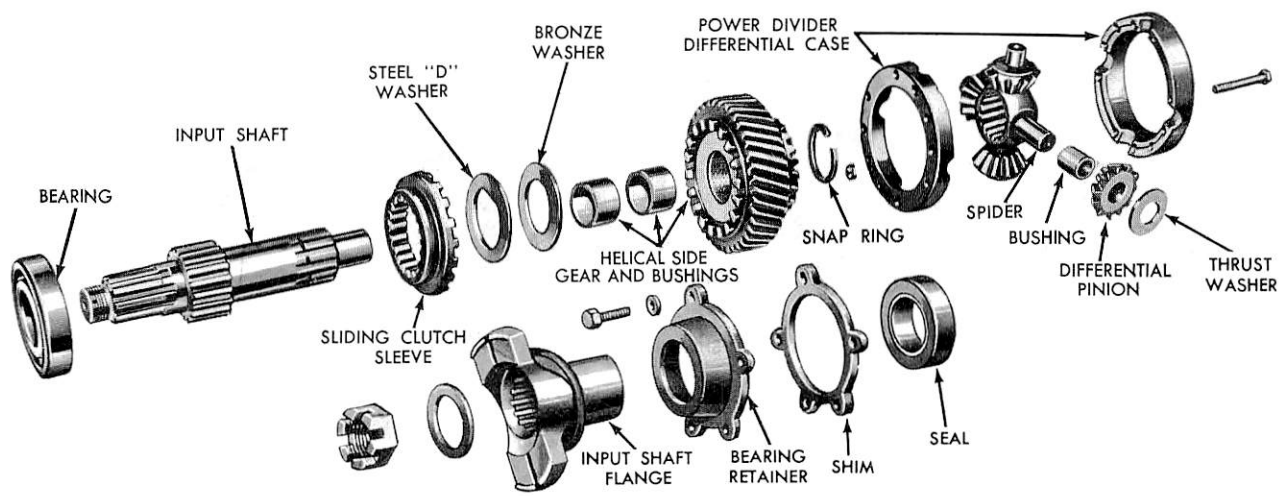

FIG. 12 Inter-Axle Differential Input Shaft and Related Parts

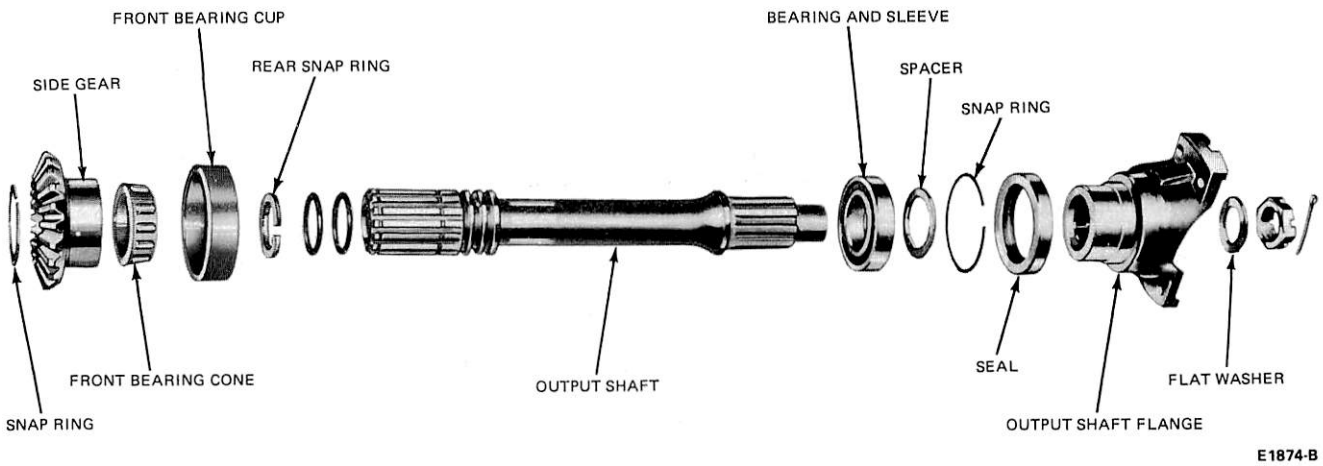

FIG. 13 Output Shaft and Related Parts

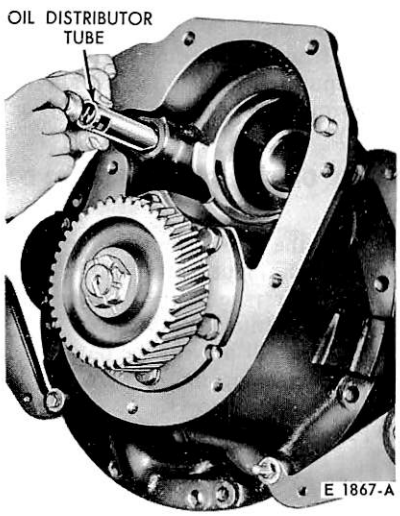

FIG. 14 Installing Oil Distributor

power divider cover, engaging the sliding clutch. The oil drain back holes in the carrier cover, the shims, and the bearing cover **must be in alignment.**

3. Install a new seal and felt in the input shaft bearing retainer (Fig. 10). Install the input shaft bearing retainer without a shim. Tighten the retainer bolts only enough to bottom the retainer on the bearing outer race. With a feeler gauge, check the clearance between the bearing retainer and power divider cover.
4. Remove the retainer and install a shim equal to the clearance determined by the feeler gauge, plus 0.001. This shim will provide a seal at the outer edge of the retainer. Torque the retainer to cover bolts to specifications.
5. Install the input shaft flange and nut.
6. Place the lockout shift fork on the sliding clutch sleeve. Install the sleeve on the input shaft and, at the same time, insert the fork shaft into the cover (Fig. 10).
7. Install the return spring, flat washer and pin on the lockout shift fork shaft.
8. Place the steel D-washer on the input shaft. Align the flat on the washer with the flat on the shaft. Retain the washer with grease.
9. Place the bronze washer against the steel washer. **Retain it with grease.**
10. Install the integral helical and side gear on the input shaft and against the bronze washer. Install the snap ring at the front of the integral helical and side gear. This snap ring

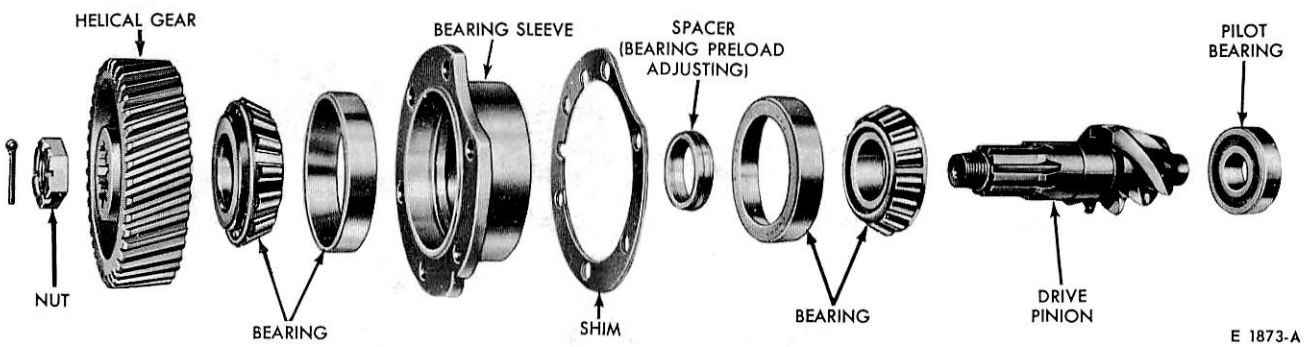

FIG. 15 Drive Pinion and Related Parts

will prevent the D-washer from sliding out of position.

11. Place the assembled power divider differential in the carrier housing with the bolt heads in (nuts out) as shown in Fig. 11. **If the differential assembly is installed with the bolt heads reverse to the foregoing, the nuts will contact the power divider case with resultant serious damage to the rear axle assembly.**
12. Place a new gasket on the carrier housing. Assemble the power divider input shaft and cover assembly to the carrier housing (Fig. 11). Start the power divider cover to carrier housing bolts and tighten them carefully to pull the cover against the carrier housing on the dowel pins. If the cover does not move into position easily, the steel D-washer on the input shaft may have slid out of position. As soon as the cover is in normal position, hold the input shaft flange and turn the output shaft. If the input shaft can be held while the output shaft is turning, the steel washer is properly positioned.

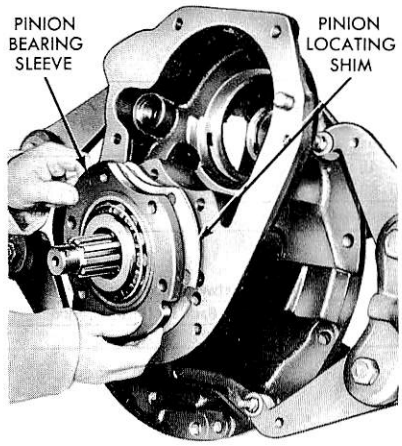

E 1866-A

FIG. 16 Installing Drive Pinion and Sleeve

13. Torque the power divider cover to carrier housing bolts to specification.
14. Hold the input shaft flange and torque the flange nut to specification.

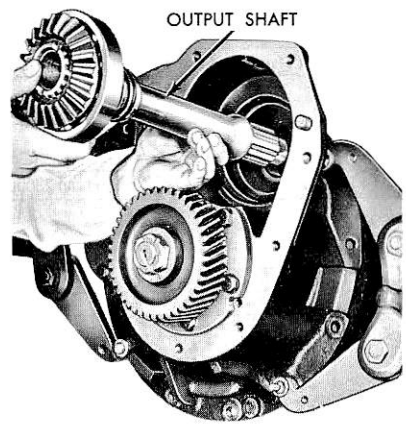

E 1868-A

FIG. 17 Installing Output Shaft

15. Install the lockout shift lever and bracket on the power divider cover. Torque the bracket bolts to specification.

SPECIFICATIONS

EATON TANDEM AXLE SPECIFICATIONS

Axle Shaft Flange Stud Nut Torque Limits (All Axles)				
Thread Size	Torque Limits (Ft-Lbs)		Thread Size	Torque Limits (Ft-Lbs)
7/16-20	35-45		5/8-18	100-120
1/2-20	50-60		3/4-16	130-170 (1)
(1) 160-200 Ft-Lbs on all 22000 pound and 23000 pound capacity axles.				

Backlash Between Ring Gear and Pinion		
Axle	Backlash (Inch)	Drive Gear Runout (Inch)
All Eaton	0.006-0.016	0.008 Maximum

EATON AXLE DRIVE PINION ADJUSTMENT SPECIFICATIONS

Axle Models		Specification for Drive Pinion Bearing Preload Adjustment				Drive Pinion Position Adjustment	
		Pinion Bearing Spacer Thickness	Drive Pinion Nut Torque Setting (ft-lbs)	Arbor Press Preload Pressure Setting (tons)	Spring Scale Reading (pounds) To Obtain 15 to 35 in-lbs Torque	Pinion Bearing Cage Shim Pack	Depth Gauge Setting
TANDEM DRIVE AXLES	30DSC,	0.638	325-450	9-10	6-14	0.040	4.121
	34DSC, 34DPC, 34DSE, 34DTE,	0.642	500-700	9-10	5-12	0.056	4.4062
	38DSE, 38DPE, 38DSC, 38DPC, 38DTC	0.642	400-600	9-10	5-12	0.056	4.4062

D SERIES TANDEM DRIVE AXLES

Single Reduction, 2-Speed and 3-Speed Torque Settings in ft-lbs unless otherwise specified					
Description		Ft-Lbs	Description		Ft-Lbs
Differential Bearing Adjuster Lock	Cap Screw 9/16-12 (Grade 5)	115-125	Drive Pinion	Nut 1-1/8-18	325-450
	Cap Screw 5/8-11 (Grade 5)	160-175		Nut 1-1/4-12	400-600
Differential Bearing Cap to Carrier	Cap Screw 5/8-11 (Grade 7)	150-170		Nut 1-1/2-18	500-700
	Cap Screw 11/16-11 (Grade 7)	210-250	Drive Pinion Bearing Cage To Carrier (or Power Divider Case)		
	Cap Screw 13/16-10 (Grade 7)	320-380		Cap Screw 9/16-12 (Grade 5)	115-125
Differential Carrier To Axle Housing	Cap Screw 5/8-11 (Grade 5)	160-175		Cap Screw 9/16-12 (Grade 7)	135-155
	Stud Nut 1/2-20 (Grade 8)	110-130	Input Shaft	Nut 1-1/2-18	350-500
	Stud Nut 5/8-18 (Grade 8)	220-240	Output Shaft	Nut 1-1/4-12	175-325
Differential Carrier Cover to Carrier	Cap Screw 9/16-12 (Grade 5 7 and 8)	115-125	Input Shaft Bearing Cover	Cap Screw 1/2-13 (Grade 5)	75-85
Differential Case (Axle)	Cap Screw 7/16-14 (Grade 7)	55-65	Oil Collector Drum to Differential Case	Cap Screw 7/16-14 (Grade 5)	45-55
	Cap Screw 1/2-13 (Grade 7)	85-105	Inspection Cover to Axle Housing	Stud Nut 7/16-14 (Grade 5)	35-45
	Cap Screw 1/2-20 (Grade 7)	100-120		Stud Nut 7/16-20 (Grade 8)	70-85
Differential Case (Interaxle) (in power Divider)	Bolt/Nut 7/16-20 (Grade 5)	55-60	Lockout Unit to Carrier	Cap Screw 7/16-14 (Grade 5)	
	Bolt/Nut 5/16-24 (Grade 8)	17-23		Vacuum Type	45-55
Ring Gear to Differential Case (Single Reduction)	Bolt/Nut 1/2-20 (Grade 8)	90-100		Air Type	30-40
	Bolt/Nut 5/8-18 (Grade 8)	190-200	Shift Units to Carrier (2-Speed and 3-Speed)	Stud Nut 7/16-20 (Grade 5)	45-50
Ring Gear Support Case (2-Speed, 3-Speed, PDR)	Bolt/Nut 1/2-13 (Grade 7)	90-105	Cover Plate to Carrier (PDR) (At Shift Unit Opening)	Cap Screw 7/16-14 (Grade 5)	35-45
	Bolt/Nut 1/2-20 (Grade 7)	85-105	Oil Pickup Through to Carrier	Nylock Screw 1/4-20 (Grade 5)	35-50 in-lbs
	Bolt/Nut 9/16-18 (Grade 7)	135-150			

PART 15-51 Tandem Axle - Rockwell

Applies to All 800-9000 Series with Tandem Rear Axle

COMPONENT INDEX	Page
ADAPTER CASE	
Assembly	51-07
Disassembly	51-04
BEARINGS AND SEALS	
Adjustment	51-02
CARRIER	
Assembly	51-06
Disassembly	51-04
DESCRIPTION	
FORWARD CARRIER	
Removal and Installation	51-02
INTER-AXLE DIFFERENTIAL	
Assembly	51-07
INTER-AXLE DIFFERENTIAL (Cont.)	
Disassembly	51-04
Removal and Installation	51-02
REAR AXLE HOUSING	
Removal and Installation	51-02
REARWARD CARRIER	
Removal and Installation	51-03
REAR WHEELS	
Adjustment	51-02
SPECIFICATIONS	51-09
THROUGH-SHAFT	
Assembly	51-07
Disassembly	51-04

DESCRIPTION

An inter-axle differential is mounted on the forward axle (Fig. 1). The inter-axle differential input and through shafts are arranged to provide a straight-through drive to the rearward axle. The two shafts are connected only through the power differential divider.

The inter-axle differential input shaft drives the inter-axle differential spider and pinions. The pinions are in constant mesh with the differential front and rear side gears. The differential rear side gear is splined to a spur-type transfer gear (through-shaft drive gear) which is in constant mesh with an idler gear. The idler gear is in constant mesh with another spur-type gear which is splined to the forward axle drive pinion. The differential front side gear is splined to the through-shaft.

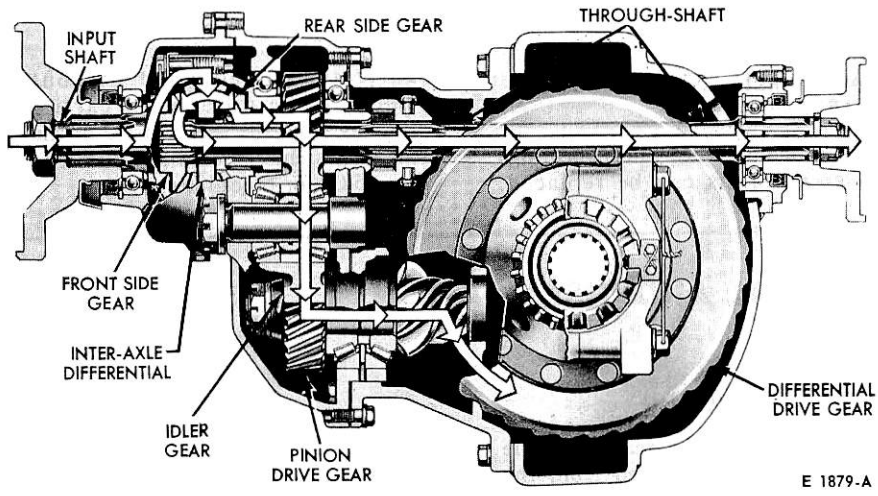

FIG. 1 Inter-Axle Differential Power Flow

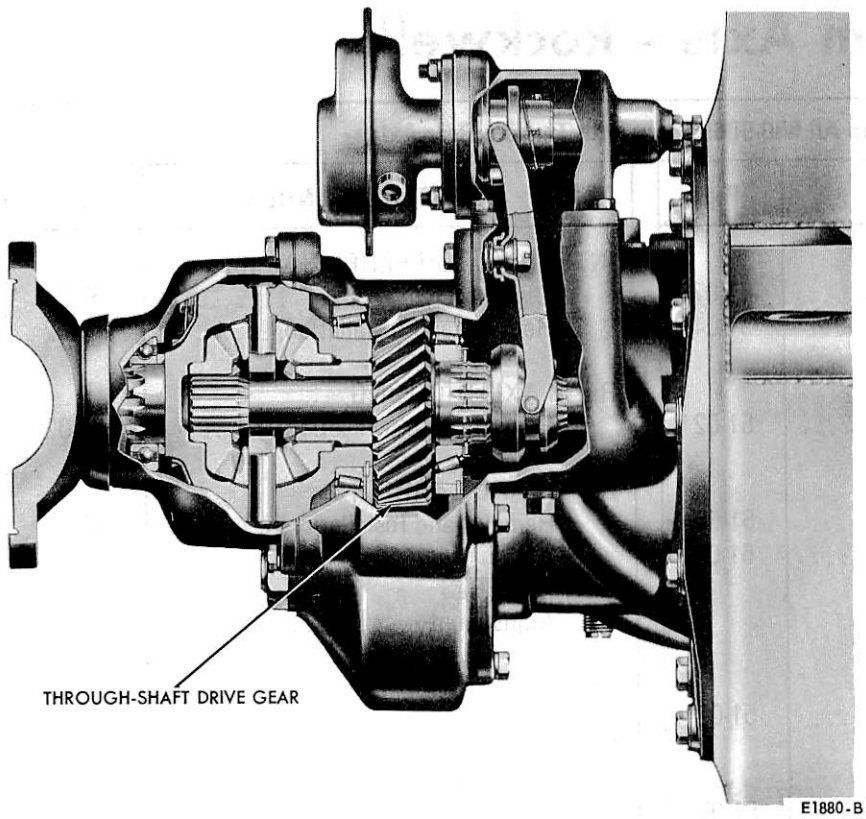

FIG. 2 Power Shift Unit

In normal operation, differential action is maintained between the forward and rearward axles. The inter-axle differential pinions drive the front and rear side gears at the same speed. The rear side gear drives the forward axle drive pinion through the transfer and idler gears. The front side gear drives the rearward axle drive shaft.

In lockout operation, both inter-axle differential side gears, the transfer gear, and the through-shaft are all locked together so that there is no differential action between the forward and rearward axles. A power shift unit mounted on the forward axle moves a splined sliding clutch sleeve which locks the transfer gear to the through-shaft (Fig. 2). Since the transfer gear is permanently splined to the rear side and is in constant mesh with the idler gear which turns the forward axle pinion gear, the forward axle is locked to the through-shaft.

The vacuum operated lockout control unit is mounted to the rear flange of the shift shaft housing assembly. For operation and repair procedures, refer to Part 15-21.

ADJUSTMENTS

REAR WHEELS, BEARINGS AND SEALS

Axle shafts, wheel hubs, bearings and grease seals can be replaced, lubricated, or adjusted without removing the differential carrier assembly from the axle housing or the rear axle assembly from the vehicle. See Part 15-01 for procedures.

REMOVAL AND INSTALLATION

REAR AXLE HOUSING

If the forward or rearward axle housing is to be removed from the vehicle, refer to Tandem Axle Suspension, Parts 14-40 and 14-41.

INTER-AXLE DIFFERENTIAL AND FORWARD CARRIER

Removal

1. Disconnect the forward drive shaft at the inter-axle differential input shaft flange.
2. Disconnect the rear drive shaft at the through-shaft flange.
3. Remove the plug from the bottom of the axle housing and drain the lubricant. Drain the lubricant from the inter-axle differential cover by removing the bottom plug.
4. Remove the axle shaft, stud nuts and lock washers.

If tapered dowels are installed in the axle shaft flange, hold a short drift firmly in the center of the axle shaft flange, and then strike it sharply to loosen the dowels. Remove the dowels and then remove the axle shaft.

Tapered dowels are not used at the axle shaft flange on most of the larger trucks. On these flanges, two puller threads are provided. Use one or both puller threads to remove the axle shafts (Refer to Part 15-01).

5. Remove the attaching screws and lock washers, and remove the shift shaft housing assembly (Fig. 2).
6. Remove the shift lever attaching nut, and lift out the button, shift

lever, cup and spring.
7. Remove the through-shaft, cage and flange assembly. To free the through-shaft cage from the housing bore, it may be necessary to tap the yoke with a soft mallet. While the through-shaft assembly is being drawn out from the rear of the housing, work the sliding clutch from the splines by a hand at the shift lever opening. When the through-shaft clears the opening, lift out the clutch.
8. Remove all the carrier-to-housing stud nuts except the two top nuts which should be loosened but left on the studs to prevent the carrier from falling. Break the carrier loose from the housing with a rawhide mallet.
9. Place a roller jack under the carrier, remove the two top nuts, and work the carrier free. A small pinch bar may be used to straighten the carrier in the housing bore, but the end of the bar should be rounded to prevent indenting the carrier flange.

Installation

1. Clean the inside of the axle housing and install a new gasket over the housing studs.
2. Mount the inter-axle differential and carrier assembly on a roller jack and roll the assembly into position. Start the carrier into the housing with four flat washers and nuts equally spacer, then tighten the nuts alternately to draw the carrier squarely into the axle housing.
3. Remove the nuts and flat washers, install the lock washers and stud nuts, and torque to specification.
4. Enter the through-shaft and cage assembly with new gasket into the cage bore in the rear of the axle housing until the forward end of the shaft is even with the shift lever opening.
5. Slide the splined clutch collar over the forward end of the shaft through the shift housing opening and ease the shaft through and into the forward side gear of the inter-axle differential, while at the same time passing the splined clutch collar through and onto the through-shaft clutch splines.
6. Install the through-shaft cage retaining screws and lock washers and torque to specification.
7. Install the shift lever spring, cup, and lever over the shift lever bolt. Properly locate the lever inner yoke in the clutch groove at this time.
8. Install the shift lever button and nut. Tighten the nut securely with a box wrench and install a cotter pin.
9. Position the shift shaft housing assembly with new gasket to the carrier, making sure that the shift lever outer yoke is properly located in the shift shaft collar groove.
10. Install the shift housing cap screws and torque to specification.
11. Install the axle shafts, and the retaining nuts and lock washers.
12. Remove the fill plugs on the axle housing and on the inter-axle differential cover to fill with proper lubricant. Install the plugs.
13. Connect the rear drive shaft at the through-shaft flange.
14. Connect the forward drive shaft at the inter-axle differential input shaft flange.

REARWARD CARRIER

Removal

1. Drain and discard the axle lubricant.
2. Remove the axle shaft, stud nuts and lock washers.

If tapered dowels are installed in the axle shaft flange, hold a short drift firmly in the center of the axle shaft flange, and then strike it sharply to loosen the dowels. Remove the dowels and then remove the axle shaft.

Tapered dowels are not used at the axle shaft flange on most of the larger trucks. On these flanges, two puller threads are provided. Use one or both puller threads to remove the axle shafts (Refer to Part 15-01).

4. Remove all the carrier-to-housing stud nuts except the two top nuts which should be loosened but left on the studs to prevent the carrier from falling. Break the carrier loose from the housing with a rawhide mallet.
5. Place a roller jack under the carrier, remove the two top nuts and work the carrier free.

Installation

1. Clean the inside of the axle housing and install a new gasket over the housing studs.
2. Mount the carrier on a roller jack and roll the assembly into position. Start the carrier into the housing with four flat washers and nuts equally spaced, and then tighten the nuts alternately to draw the carrier squarely into the axle housing.
3. Remove the nuts and flat washers, install the lock washers and stud nuts, and torque to specification.
4. Install new gaskets on the wheel hubs, and then install the axle shafts. Install the dowels, lock washers, and nuts. Torque the nuts to specification.
5. Connect the drive shaft at the rear universal joint flange.
6. Fill the axle housing with the proper grade and amount of lubricant.

DISASSEMBLY AND ASSEMBLY

DISASSEMBLY OF MAJOR COMPONENTS

1. Remove the inter-axle differential and forward axle assembly from the housing as outlined in the foregoing and mount the assembly on a repair stand (Fig. 3).
2. Remove the screws and lock washers that attach the inter-axle differential adapter case assembly to the carrier case assembly, and separate the adapter case from the carrier case (Fig. 3).
3. Remove the inter-axle differential cover-to-adapter case retaining screws and lock washers, and then separate the cover from the case.

THROUGH-SHAFT

Disassembly

The through-shaft assembly has to be removed before the forward axle carrier assembly is removed from the axle housing. See Inter-Axle Differential and Forward Carrier Removal.

1. Remove the cotter pin and nut, and remove the universal joint flange from the shaft with a suitable puller.
2. Press the through-shaft from the cage assembly by using a suitable sleeve against the bearing inner race (Fig. 4).
3. Remove the bearing retaining snap ring from the cage, and tap the

radial bearing out of the cage bore.
4. If the oil seal is damaged or worn, press it out of the cage with a suitable sleeve.

INTER-AXLE DIFFERENTIAL

Disassembly

1. While holding the input shaft flange with a suitable holder, remove the cotter pin, flange attaching nut and washer.
2. Remove the flange with a suitable puller.
3. Press the inter-axle differential case assembly from the inter-axle differential cover (Fig. 5).
4. If the original identification marks are not clear, mark the differential case halves with a punch for correct alignment on assembly.
5. Remove the lock wire and the differential case cap screws.
6. Separate the case halves and remove the spider, pinions, side gears and thrust washers.
7. Remove the oil seal and the front bearing retaining snap ring from the front side of the inter-axle differential cover.
8. Press the inter-axle differential front radial bearing out of the differential cover (Fig. 5). The bearing comes out of the front end of the cover.

ADAPTER CASE

THROUGH-SHAFT DRIVE GEAR BEARINGS

Disassembly

1. With the differential assembly (Fig. 1) removed from the axle and mounted in a stand, remove the inter-axle differential cover, inter-axle differential and adapter case, using the procedure given in this manual.
2. Cut the lockwire and remove the capscrews from the bearing cage in the adapter case, as shown in Fig. 6.
3. Lift the cage and shim pack from the adapter housing (Fig. 6). Be sure to keep the shim pack intact for reassembly.
4. Working from the rear of the adapter case, tap the through-shaft drive gear assembly from the case (Fig. 7) with a rawhide mallet.
5. If replacement is necessary, remove the bearing cups from the cage and the adapter case.
6. Remove the tapered bearings from the drive gear with a universal puller.

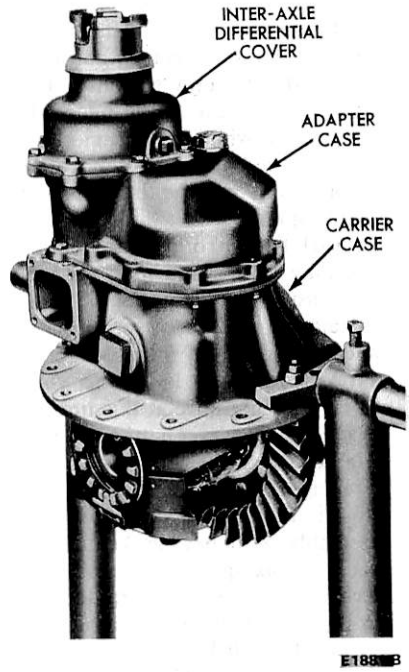

FIG. 3 Forward Axle in Repair Stand

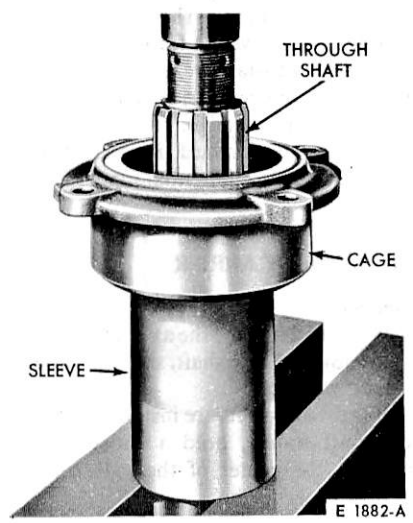

FIG. 4 Removing Through-Shaft From Cage

IDLER SHAFT AND GEAR

Disassembly

1. Remove the cotter pin, nut and spacing washer from the idler shaft. Hold the shaft at the flats on the inner end while removing the nut.
2. Slide the idler shaft and the idler gear and bearing assembly from the adapter case (Fig. 8).
3. Remove the tapered bearings from the idler gear. For complete disassembly, tap out the cups and remove the spacers (Fig. 9). Remove the snap ring from the gear bore groove.

CARRIER

Disassembly

1. Inspect the carrier before disassembly as given in Part 15-01. Check and record the backlash setting at this time.
2. With the carrier in an upright position, loosen the lock nut and back off the thrust block adjusting screw until the thrust block drops out (Fig. 5).
3. Center punch one differential bearing cup and corresponding lug for proper identification upon assembly.
4. Cut and remove the lock wire from the differential bearing cup attaching screws and from the adjuster locks.
5. Remove the attaching screws and the adjuster locks and bearing cups.
6. Lift the differential and drive gear assembly from the carrier.
7. Mark the differential case halves with a punch for proper alignment when assembling. Cut and remove the lock wire.
8. Remove the differential case nuts and bolts, and separate the case halves. Remove the spider, pinions, side gears, and thrust washers.
9. If the ring gear is to be replaced, follow the procedures outlined in Part 15-01.
10. Cut and remove the lock wire, then remove the pinion cage retaining screw (Fig. 5).
11. Remove the pinion and cage assembly from the carrier housing by tapping the end of the pinion shaft with a brass bar or hammer. Be careful not to damage the pinion radial (pilot) bearing.
12. Remove the cotter pin and the nut and washer that retain the helical drive gear to the pinion shaft.
13. Press the pinion shaft from the cage, bearings, and drive pinion gear.
14. Remove the pinion drive gear (and the gear spacer where used) from the pinion shaft.
15. Remove the pinion outer bearing from the cage, then remove the selective bearing preload spacer from the pinion shaft.
16. If necessary to replace the pinion inner bearing or pilot bearing, remove them from the pinion shaft with a puller.
17. If necessary to replace the pinion

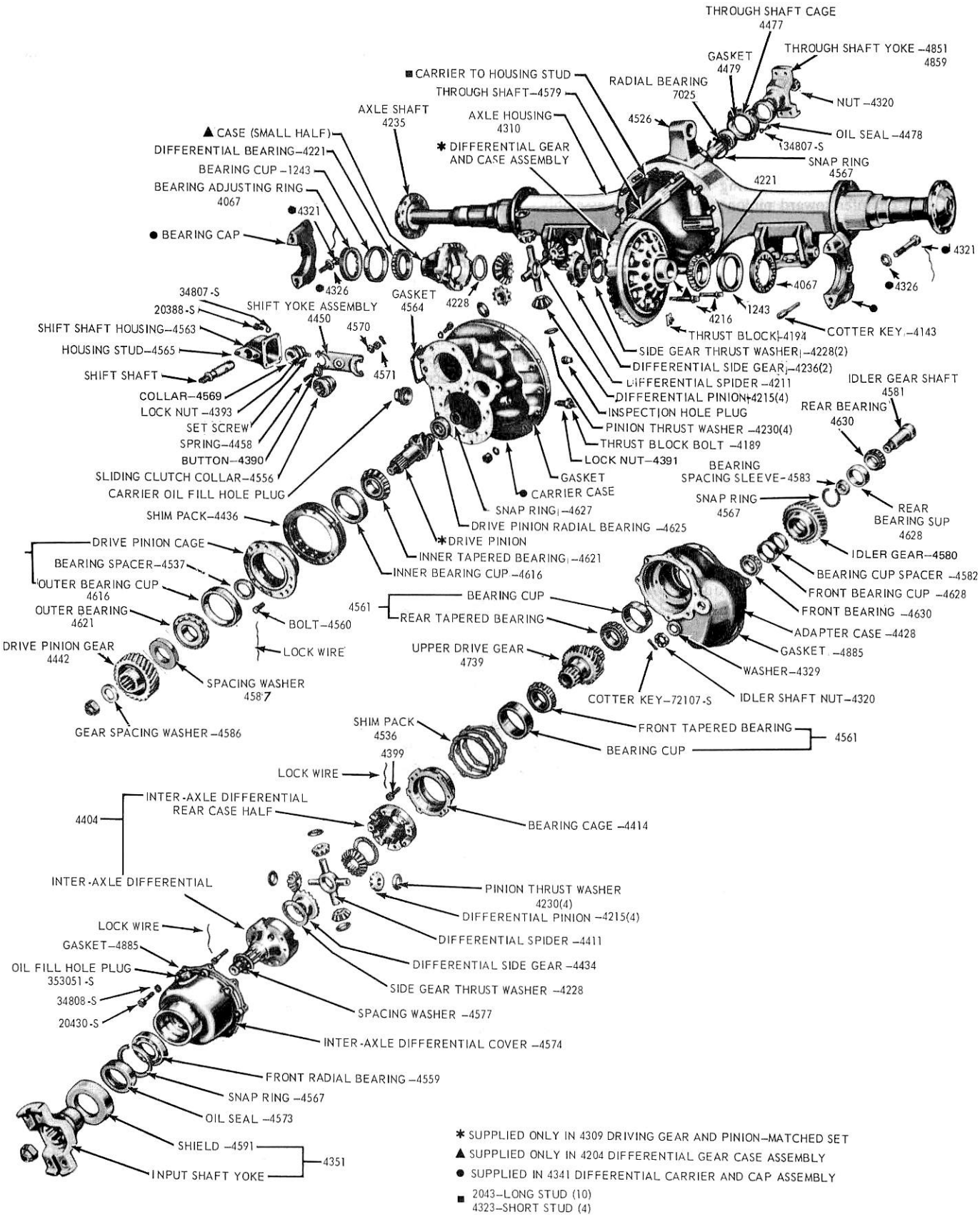

FIG. 5 Rockwell Tandem Forward Axle Disassembled

bearing cups, remove them from the cage with a suitable puller.

18. Clean, inspect and repair the component parts of the carrier as outlined in Part 15-01.

CARRIER

Assembly

1. Press the pinion rear bearing with large chamfer toward pinion teeth, against the pinion shoulder with a suitable sleeve against the bearing inner race.
2. Press the radial (pilot) bearing against the radial bearing shoulder and install the bearing retaining snap ring (Fig. 5).
3. If new cups are being installed, press the cups into the cage cup bores using a suitable sleeve and making sure that the cups are seated firmly against the cage shoulders.
4. Lubricate the bearings and cups with light machine oil, insert the pinion shaft (with pilot and inner bearings installed) into the pinion cage, and position the preload spacer over the pinion shaft against the inner bearings.
5. Firmly press the pinion outer bearing into the cage and against the preload spacer.

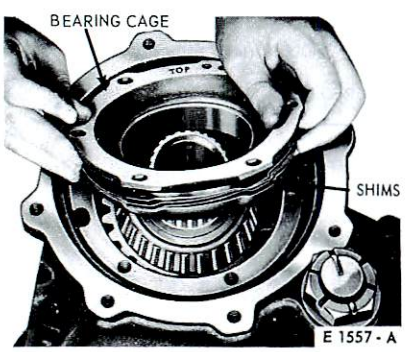

FIG. 6 Removing Shims and Cage

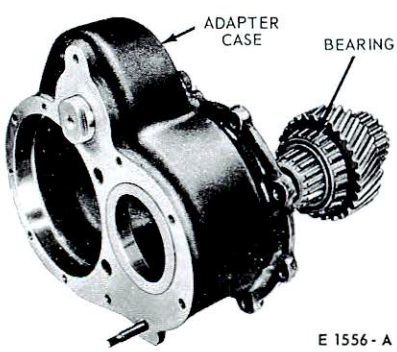

FIG. 7 Removing Gear Assembly

6. Rotate the cage several revolutions to assure normal bearing contact.
7. While in the press under pressure, check the pinion bearing preload adjustment as given in Testing, Part 15-01. Follow the method shown in Fig. 8, Part 15-01.
8. If the original pinion and ring gear set is being used, install the original shim pack on the pinion cage assembly.
9. If a new gear set is being installed, change the shim pack as outlined in Part 15-01. When necessary to replace either the pinion or the ring gear, the entire gear set should be replaced.
10. Position the pinion and cage assembly in the cage bore of the carrier, and tap into place with a soft mallet.
11. Install and torque the pinion cage-to-carrier retaining screws, but do not install the lock wire until the final carrier adjustments have been made.
12. Lubricate the differential case inner walls and all component parts with axle lubricant.
13. Position the thrust washer and side gear in the ring gear half of the differential case.
14. Assemble the spider with pinion, the other side gear and thrust washers into the ring gear half of the case.
15. Align the punch marks and install the other half of the differential case. Draw the assembly together with three equally spaced bolts and nuts.
16. Install the remaining bolts and nuts, torque the nuts to specification, and install the lock wire.
17. If the differential bearings are being replaced, press the new bearings firmly on the differential case.
18. Lubricate the differential bearings and cups with axle lubricant, and install the differential and ring gear assembly in the carrier case.
19. Adjust the differential bearing preload and backlash as outlined in Part 15-01. If the original gears are used, the backlash should be the same as that checked and recorded before disassembly. If new gears are being installed, backlash setting should be 0.010 inch.
20. Check and adjust pinion and ring gear tooth contact as outlined in Testing, Part 15-01.
21. Position the carrier with the back face of the differential ring gear upward, and remove the thrust block adjusting screw and lock nut from the carrier.
22. Place the thrust block on the back face of the ring gear and rotate the gear until the hole in the thrust block is aligned with the adjusting screw hole (Fig. 10).
23. Install the adjusting screw and lock nut, and tighten the adjusting screw

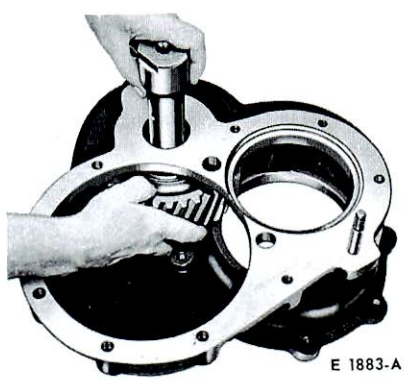

FIG. 8 Removing or Installing Idler Gear and Shaft



FIG. 9 Idler Gear and Bearing Assembly

enough to hold the thrust block firmly against the back face of the ring gear.

24. To obtain the correct adjustment of 0.010-0.020 inch clearance, loosen the adjusting screw 1/4 turn, then lock it with the lock nut.
25. Recheck to assure a minimum clearance of 0.010 during a full rotation of the differential ring gear.

ADAPTER CASE

IDLER SHAFT AND GEAR

Assembly

1. Install the snap ring into the groove of the idler gear hub (Fig. 9).
2. Press the idler gear outer bearing cup squarely against the snap ring.
3. Insert the cup spacer into the hub against the opposite side of the snap ring.
4. Press the inner bearing cup squarely against the cup spacer.
5. Position the idler gear inner and outer bearings into their cups with the bearing spacer or combination of two spacers between them.
6. Slide the complete assembly through the adapter case drive pinion opening. Position the assembly so that the bearings and spacer are aligned with the adapter shaft hole, and insert the idler shaft (Fig. 8).
7. Tap the idler shaft through the adapter case and idler gear assembly so that the idler gear outer bearing is squarely against the idler shaft shoulder. The idler shaft flat must be lined up with the corresponding flat in the carrier.
8. Hold the adapter case and idler gear assembly securely in a vise with the jaws clamped on the flatted end of the idler shaft. Install the idler shaft washer and nut, and torque the nut to 350-400 ft-lbs.
9. Mount a dial indicator to the adapter case so that the stem is set against the idler gear face, and measure the idler gear bearing end play.
10. If the bearing end play does not measure between 0.001-0.005 inch, use thinner or thicker bearing spacer or combination of two spacers as required.
11. After the end play has been adjusted to 0.001-0.005 inch, remove the nut and washer. Insert the O-ring, install the washer and nut, and torque to 350-400 ft-lbs. Install the cotter pin.

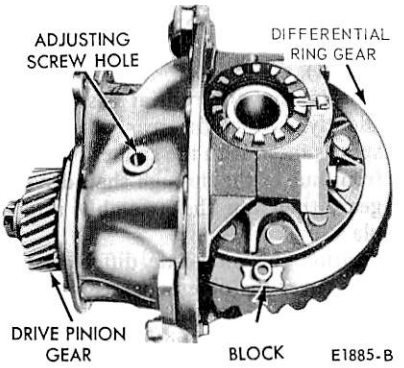

FIG. 10 Installing Thrust Block

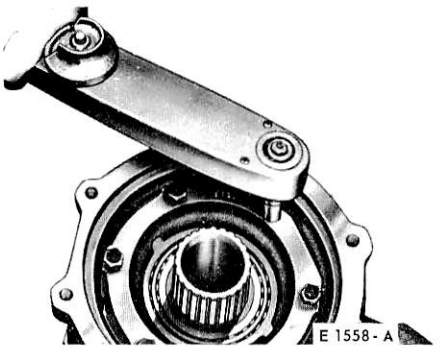

FIG. 11 Torquing Cage Bolts

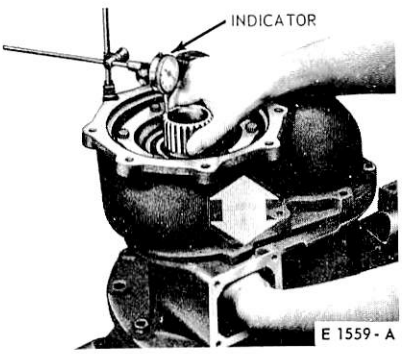

FIG. 12 Checking End Play

THROUGH-SHAFT DRIVE GEAR BEARINGS

Assembly

1. Press the front and rear tapered bearings onto the through-shaft drive gear.
2. If removed in disassembly, press the front bearing cup into the bearing cage.
3. Tap the rear bearing cup into the adapter case.
4. Slide the gear assembly into the adapter case.
5. With the carrier assembly in the stand in an upright position, install a new adapter case gasket and place the adapter case assembly over the carrier (Fig. 1).
6. Install the lock washers and capscrews attaching the adpater case to the carrier and tighten the capscrews evenly and alternately to 60-77 ft-lb. Seat the inner drive gear bearing cup against the carrier face before installing gear, shims, cover and capscrews.
7. Using the original shim pack, install the bearing cage over the through shaft drive gear bearing Fig. 11.
8. Rotate the bearings by hand to seat them in position while installing the capscrews and lock washers that hold the bearing cage to the adapter case. Tighten the capscrews to 27-35 ft-lb torque Fig. 11.
9. Install a dial indicator as shown in Fig. 12.
10. With one hand through the shifter slot and the other on top of the shaft, (Fig. 12) move the gear assembly up and down. The amount of movement should be within the specified amount of endplay (0.001-0.005 inch).

Do not use a bar to move the bearings up and down because this may cock them in position.

11. If the endplay is incorrect, add or subtract shims as required to obtain the correct endplay.
12. Lockwire the capscrews in position.

INTER-AXLE DIFFERENTIAL

Assembly

1. Lubricate the differential case walls and all differential component parts with axle lubricant.
2. Assemble the side gears, spider, pinion gears and thrust washers into the differential rear case half.
3. Align the punch marks, assemble the front case half to the rear case half, and draw the two halves together with the case bolts.
4. Check for free rotation of the gears, and correct if necessary.
5. Torque the differential case bolts to specification, and install the lock wire.

THROUGH-SHAFT

Assembly

1. Install the through-shaft radial bearing into the cage and lock it in

place with the snap ring (Fig. 5).
2. Press the cage and bearing assembly on the rear splined end of the through-shaft so that the inner race of the bearing is firmly seated against the shoulder on the through-shaft. For this operation, use a sleeve that will slip over the shaft and bear against the inner race of the bearing.
3. Install the oil seal in the through-shaft cage with a suitable driver.

ASSEMBLY OF MAJOR COMPONENTS

1. Install the inter-axle differential power divider assembly to the adapter case so that the rear hub of the differential fits over the front hub of the through-shaft drive gear (Fig. 1).
2. Rotate the differential assembly slightly so that the rear side gear splines mesh with the splines on the front hub of the through-shaft drive gear, then tap the assembly into place.
3. Position the inter-axle differential cover over the differential assembly onto the adapter case, and secure the cover to the case with cap screws and lock washers. Torque to specification.
4. Install the spacing washer and the bearing on the differential case front half, and install the bearing snap ring in the differential cover.
5. With suitable driver, install the outer seal in the differential cover.
6. With the carrier case mounted in a stand and in an upright position, install a new adapter case-to-carrier gasket.
7. With a chainfall, lower the inter-axle differential and adapter case assembly onto the carrier case. As the assembly is being positioned, rotate the idler gear shaft so that one shaft flat mates with the cast flat in the carrier.
8. Install the adapter case-to-carrier retaining screws and lock washers, and torque to specification.

SPECIFICATIONS

ROCKWELL TANDEM GENERAL SPECIFICATIONS

Axle Shaft Flange Stud Nut Torque Limits (All Axles)			
Thread Size	Torque Limits (Ft-Lbs.)	Thread Size	Torque Limits (Ft.-Lbs.)
7/16-20	35/45	5/8-18	100-120
1/2-20	50-60	3/4-16	130-170 ①

① 160-200 Ft-Lbs on all 22000 pound and 23000 pound capacity axles.

Backlash Between Ring Gear and Pinion		
Axle	Backlash (Inch)	Drive Gear Runout (Inch)
Rockwell Tandem (All)	0.005-0.015	0.008 Maximum

Bearing Preload						
Axle Model	Pinion Shaft Nut-Thread Size and Torque Limits Foot-Pounds (Prevailing Torque Nuts)		Press Ram Pressure for Preload Check (Tons)	Pinion and Cross Shaft Bearing Preload (Inch-Pounds)	Backlash Limits (Inches)	Differential Bearing Preload Adjusting Nut Notches Tighten from Zero End Play (each Adjusting Nut)
	1-1/2x18	500-600	14	5-15	0.005-0.015	1
	1-3/4x12	1000-1300	14	5-15	0.005-0.015	1
	1-1/4x18	500-600	18			

ROCKWELL TANDEM TORQUE LIMITS

Bolt and Stud Nuts					Cap Screws				
Location On Unit	Dia. Inch	Thds. No.	Torque-Lb.Ft. Min.	Torque-Lb.Ft. Max.	Location On Unit	Dia. Inch	Thds. No.	Torque-Lb-Ft Min.	Torque-Lb-Ft Max.
Shift Unit	3/8	24	27	35	Bearing Cup	5/8	11	160	180
Carrier to	1/2	20	81	104	Cap Screws	3/4	10	290	320
Housing	5/8	18	160	205	Through-Shaft Cage	3/8	16	27	35
Shift Shaft Adjusting Screw	1/2	20	45	50	Carrier to Adapter Case	7/16	14	60	77
Lock Nut					Pinion Cage	1/2	13	93	120
Through-Shaft Yoke	1	20			Inter-Axle Cover	7/16	14	42	54
and Input Shaft	1-1/4	18	500	600 ①	Inter Axle	7/16	14	53	67
Yoke Nuts	1-1/2	18			Differential Case	1/2	13	93	120
Differential Case	1/2	13	93	120	Shift Housing	3/8	16	27	35
Cap Screws	5/8	18	210	270	Shift Collar Set Screws	3/8	24	12	16

① Prevailing Torque Nuts

REPLACEMENT - DIFFERENTIAL GEAR TO CASE BOLTS

Tandem Model Carrier	Service Bolt	Nut	Lock wire	Original Rivet	Spotface Diameter	Torque-Lb-Ft Min.	Torque-Lb-Ft Max.
DHD-	15X-775	N-28-1	LW-1610	RV-7812	1-1/8	105	135
FHD-	15X-775	N-28-1	LW-1610	RV-7812	1-1/8	105	135
① LHD-	51X-666	N-29-1	LW-1610	RV-7913	1-3/8	130	170
① QHD-	15X-666	N-29-1	LW-1610	RV-7913	1-3/8	130	170
② LHD-	15X-786	N-210-1	LW-1610	RV-71014	1-3/8	185	235
② QHD-	15X-786	N-210-1	LW-1610	RV-71014	1-3/8	185	235

① Original production had 9/16 rivets and require 9/16 bolts and nuts for service.
② Current productions has 5/8 rivets and require 5/8 bolts and nuts for service.
Service will no longer stock the original gears incorporating the 9/16 inch holes.
In case of current gear replacement with original cases it will be necessary to line ream the original cases to 625" to accomodate the larger bolts or rivets.
Torques given apply to parts coated with machine oil, for dry or "as rec'd." parts increase torques 10%. For parts coated with multi-purpose gear oil decrease torque 10%. Nuts on studs to use same torque as for driving the studs.

PART 15-60 Drive Shaft — Single Snap Ring Type U-Joint

Applies To All Models Except L-LN-W-9000 Series

COMPONENT INDEX	Page	COMPONENT INDEX	Page
DRIVE SHAFT		SNAP RING TYPE UNIVERSAL JOINT	
Description	60-01	Removal and Installation	60-04
Removal and Installation	60-03	SPECIFICATIONS	60-05

DESCRIPTION

The drive shaft or coupling shaft is composed of the universal joints, connecting shafts, attaching flanges and slip yokes. The number of shafts and universal joints used depends on the vehicle wheelbase. The shorter wheelbase vehicles (F-100 117 inch wheelbase and the E-100-E-300) use a one piece drive shaft as shown in Fig. 1. The longer wheelbase vehicles use a coupling shaft in conjunction with a drive shaft (Fig. 2 and 3).

The longer wheelbase vehicles are equipped with one or more coupling shafts, which extend from the transmission to rubber bushed center support bearings, and a drive shaft which extends from the center support to the rear axle.

On Econoline models, with 123.5 inch wheelbase and all models with automatic transmission the shaft is attached to the extension housing by a fixed yoke. Splines in the yoke and on the shaft permit the shaft to move forward and rearward as the rear axle moves up and down.

On 105.5 inch wheelbase vehicles except with automatic transmission a conventional slip-yoke type drive shaft is used (Fig. 1). The yoke is splined directly to the extension housing and slides forward and rearward in the extension housing as the axle moves up and down.

If a single drive shaft is used, the slip joint is at the transmission end of shaft; if two or more shafts are used, the slip joint is at forward end of the rear shaft.

Some vehicle universal joint spiders and sliding splines are equipped with lubrication fittings. These spiders and splines should be lubricated periodically using lithium grease (C1AZ-19590-B).

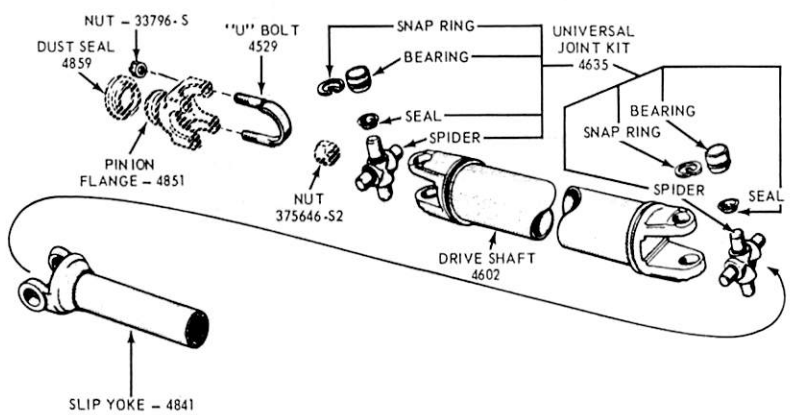

FIG. 1 Drive shaft Components (F-100 117 inch wheelbase and E-100, E-300) Slip-Yoke Design.

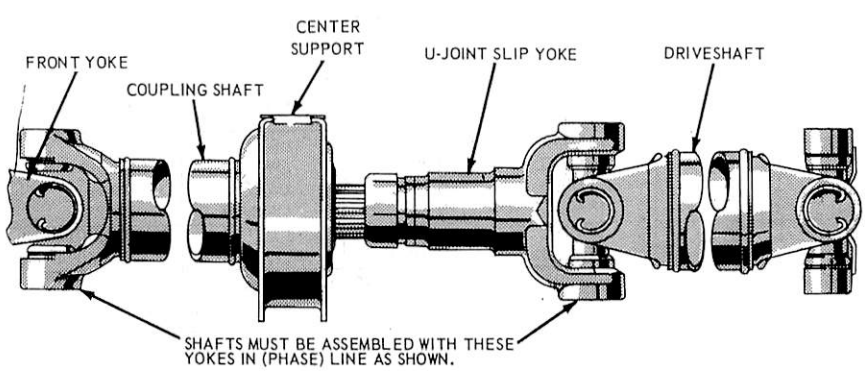

FIG. 2 Drive Shaft Components—132 and 140 Inch Wheelbase Manual Transmission

The majority of vehicles are equipped with center support bearings that are prelubricated and sealed for the life of the bearing. However, some vehicles have center support bearings equipped with lubrication fittings which should be lubricated periodically using lithium grease (C1AZ-19590-B).

All universal joints are of the needle-bearing type. The universal joint bearings are retained on the universal joint spiders by snap rings or U-bolts.

Drive shafts and coupling shafts are balanced; therefore, if the vehicle is to be undercoated, cover the drive shaft to prevent getting undercoating material on the shaft.

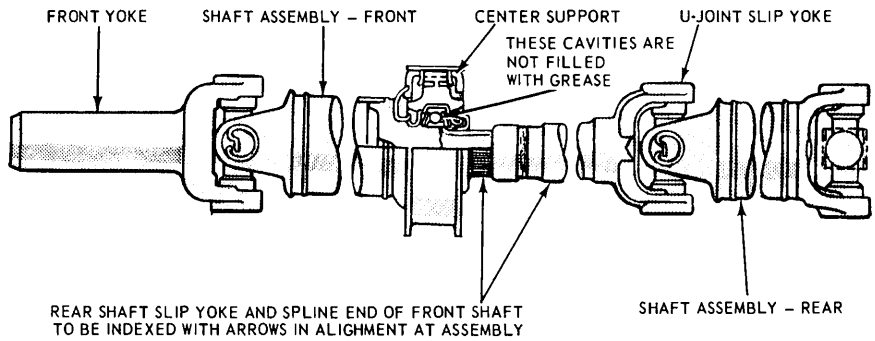

FIG. 3 Coupling Shaft and Center Support Bearing Automatic Transmission (F100-350—except F350 with FMX Transmission)

ADJUSTMENTS

DRIVESHAFT BALANCING

1. Raise the vehicle on a twin-post hoist so that both the front and rear axles are safely supported with all wheels free to rotate.
2. With the transmission in gear (include transfer unit on 4x4 type vehicles) increase vehicle speed to maximum vibration lever. Note and record the speedometer speed of this vibration period which will be used as a baseline level.

Two people are required to perform this operation; one in the vehicle, and one under the vehicle making adjustments.

3. Check attachment of all universal joint bearing caps of driveshaft or coupling shafts to transmission yoke, front or rear axle pinion yokes and all transfer unit drive yokes for improper installation or damaged universal joint bearing cap locating lugs. All yokes indicating worn, shaved, or damaged locating lugs must be replaced.
4. Check driveshaft and coupling shaft for correct phasing. If necessary, rephase driveshaft and coupling shaft as shown in Group 15-62 of this Manual.
5. With transmission (and transfer unit) in gear, run vehicle with the driveshaft and coupling shaft rotating at a speedometer speed of 40-50 mph, carefully bring a crayon, piece of chalk, or colored pencil up until it just barely contacts the rear end, center, and front end of the driveshaft (refer to Figure 4). The chalk marks will indicate the heavy side of the driveshaft. Use caution when checking driveshaft near the balance weights to prevent injury to the hands.

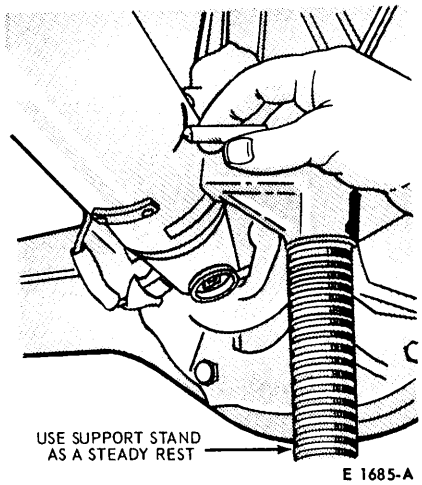

FIG. 4 Marking Drive Shaft

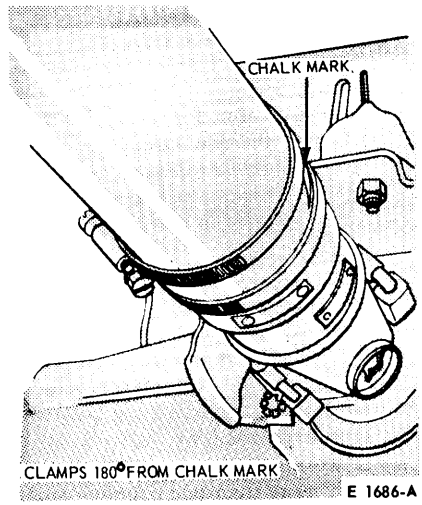

FIG. 5 Installing Clamps

6. Install two screw-type hose clamps on the driveshaft so that the heads are located 180 degrees from the chalk mark, starting at the pinion yoke end of the driveshaft. Tighten clamps (refer to Figure 5).
7. Run the vehicle up to the baseline speed. If vibration is still evidenced, rotate clamps approximately 45 degrees away from each other and test for correction of vibration. (Refer to figure 6).
8. If necessary, continue to rotate the clamps apart in smaller increments until vibration is eliminated or begins to be reduced.
9. If the vibration is not completely eliminated, repeat the above procedure and balance the front end of the driveshaft, checking for elimination or reduction in the vibration level.
10. To completely eliminate the driveline vibration, it may be necessary to balance the coupling shaft, following the same procedure indicated above. To prevent overheating, do not run the vehicle on the hoist for an extended period.
11. Remove the vehicle from the hoist and road test.

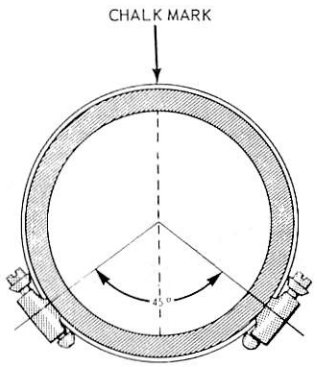

E 1687-A

FIG. 6 Rotating Clamps

REMOVAL AND INSTALLATION

DRIVE SHAFT (MANUAL TRANSMISSION)

Removal

1. Disconnect the drive shaft from the flange at the rear axle.
2. If working on a 117 inch wheel base vehicle. disconnect the drive shaft rear flange from the flange at the rear axle.
3. If working on a vehicle equipped with a coupling shaft, slide the drive shaft off the coupling shaft splines.
4. Working from the center support nearest to the rear of the vehicle, remove the two attaching bolts and support the bearing.
5. If working on a vehicle equipped with more than one coupling shaft, disconnect the rear shaft from the front one.
6. Remove the remaining center support attaching bolts and support the bearing.
7. Remove the nuts that attach the coupling shaft flange to the transmission and remove the shaft and center bearing as an assembly.
8. Thoroughly clean old grease and dirt from the drive shaft splines and then check the splines for wear, warpage, and cracks. If the shaft is worn, warped, or cracked, replace it.

Using a suitable cleaning fluid, clean all dirt from the slip yoke, slip yoke splines, and shaft splines. Carefully inspect the slip yoke splines for wear or evidence of twisting. Check the clearance between the slip yoke splines and the shaft splines.

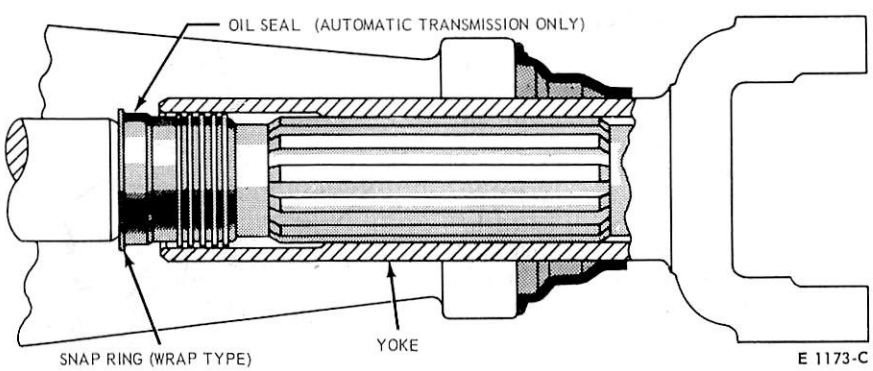

FIG. 7 Output Shaft Spline Seals

Wash all parts except the sealed ball bearing and rubber cushion in suitable cleaning fluid. **Do not immerse the sealed bearing in cleaning fluid. Wipe the bearing and cushion clean with a cloth dampened with cleaning fluid.**

Check the bearing for wear or rough action by rotating the inner race while holding the outer race. If wear or roughness is evident, replace the bearing.

Examine the rubber cushion for evidence of hardening, cracking, or deterioration. Replace it if damaged in any way.

Grease retainers and slingers are serviced only as a part of the bearing assembly.

Installation

1. Connect the front flange or joint of the drive shaft or coupling shaft to the flange on the transmission. Torque the nuts to specifications.
2. Secure the center bearing to the frame bracket with the center support and attaching bolts. Torque the bolts to specification.
3. If working on a truck with more than one coupling shaft, connect the rear shaft to the forward one, then install the remaining center support.
4. Connect the rear universal to the rear axle flange and torque the nuts or bolts to specifications. Be sure all drive shaft and coupling shaft yokes are properly in phase.

DRIVE SHAFT (AUTOMATIC TRANSMISSION)

Removal

1. To maintain drive line balance, mark the relationship of the rear drive shaft yoke and the drive pinion flange of the axle (if the yellow alignment marks are not visible)

with the shaft so that they may be installed in their original positions.

2. Disconnect the rear U-joint from the companion flange. Wrap tape around the loose bearing caps to prevent them from falling off the spider. Pull the drive shaft toward the rear of the vehicle until the slip yoke clears the transmission extension housing and the seal. Install the appropriate tool in the extension housing to prevent lubricant leakage.

Installation

1. If either the rubber seal on the output shaft or the seal in the end of the transmission extension housing is damaged in any manner, replace the seal or seals as required (Fig. 7). Also, if the lugs on the axle pinion flange are shaved or distorted so that the bearings slide, replace the flange.
2. Lubricate the yoke spline with MIC75B lubricant. This spline is sealed so that the transmission fluid does not wash away the spline lubricant (Fig. 7). Remove the tool from the extension housing. Install the yoke on the transmission output shaft. Do not allow the yoke assembly to bottom on the output shaft with excessive force.

Install the drive shaft so that the index marks or the yellow mark (if visible) on the yoke (light side) is in line with the yellow mark on the companion flange. This prevents vibration which occurs when the balance of the shaft and balance of the axle pinion flange become additive instead of neutralizing. If a vibration exists, the drive shaft should be disconnected from the axle, rotated 180 degrees and reinstalled.

3. Install the U-bolts and nuts that attach the U-joints to the drive pinion flange. Torque the U-bolt nuts to 8-15 ft-lbs.

SNAP RING TYPE UNIVERSAL JOINT

Removal

1. Place the drive shaft in a vise being careful not to damage it.
2. Remove the snap rings that retain the bearings in the yoke and in the drive shaft or coupling shaft.
3. Position the tool shown in Fig. 8 on the shaft and press the bearing out of the yoke. If the bearing cannot be pressed all the way out of the flange, remove it with vise grip or channel lock pliers.
4. Reposition the tool to press on the spider to remove the bearing from the opposite side of the flange.
5. Remove the flange from the spider.
6. Remove the bearings and spider from the drive shaft or coupling shaft in the same manner.
7. Clean all foreign matter from the yoke area at each end of the drive shaft.

Wash all parts in cleaning fluid. Make sure the lubricant passages in the journal cross are clean. Check the needle bearings and journals for evidence of wear or excessive heat.

Soak the needle bearing assemblies in a commercial cleaning fluid to soften particles of hardened grease. Then, wash these parts in cleaning fluid using a stiff brush if necessary to remove all old lubricant. Check each bearing for missing rollers.

After the needle bearing assemblies are thoroughly clean, apply clean lubricant to the rollers. Rotate them on the trunnion of the journal to check wear. Fill the journal passages with C1AZ-19590-B (ESA-M1C75-B) lubricant and fill the bearings approximately 1/3 full of C1AZ-19590-B (ESA-M1C75-B) lubricant before reassembly.

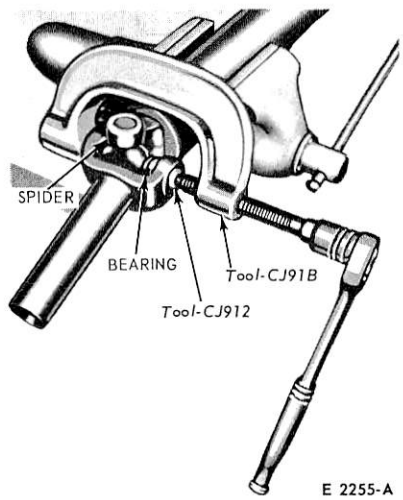

FIG. 8 Removing Universal Joint Bearing—Typical

Installation

1. Start a new bearing into the yoke at the rear of the drive shaft.
2. Position the spider in the rear yoke and press the bearing 1/4 inch below the surface (Fig. 9).
3. Remove the tool and install a new snap ring.
4. Start a new bearing into the opposite side of the yoke.
5. Install the tool and press on the bearing until the opposite bearing contacts the snap ring.
6. Remove the tool and install a new snap ring.
7. Reposition the drive shaft or coupling shaft and install the new spider and two new bearings in the front yoke in the same manner as the rear yoke.
8. Position the flange on the spider and install two new bearings and snap rings.
9. Check the joint for freedom of movement. If a bind has resulted from misalignment during the foregoing procedures, tap the ears of the drive shaft sharply to relieve the bind. Do not install the drive shaft unless the universal joints are free of bind.
10. Lubricate the universal joints with long life lithium grease C1AZ-19590-B (ESA-M1C75-B).

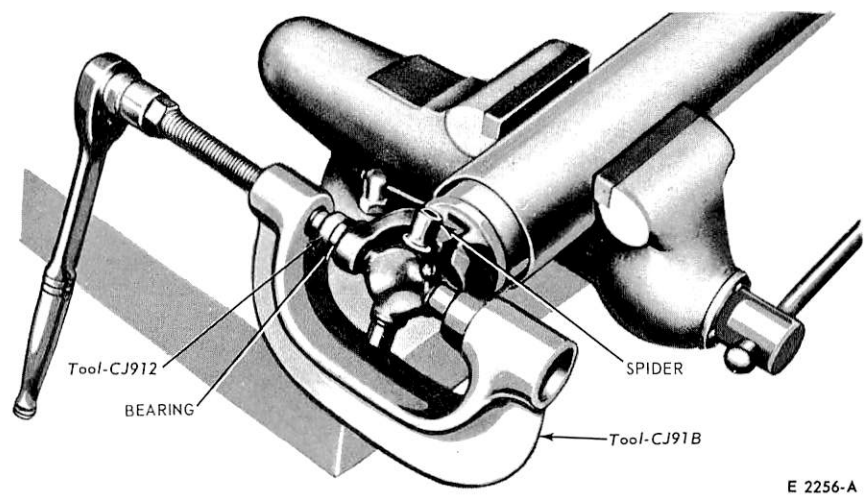

FIG. 9 Installing Universal Joint Bearing

SPECIFICATIONS

DRIVESHAFT – TORQUE LIMITS

Nomenclature	Bolt Size and Ft-Lbs		
Bolt-Yoke to Coupling Shaft or Intermediate Shaft	3/4–16 175-240 ① 5/8–18 148-164 ②	7/8–14 250-300 ③	1–20 160 ④
Nut-U-Joint Flange to Main and Aux. - Input or Output Shaft	1–20 90-130 2-16 425-525	1 1/4–18 350-420	1 1/2–18 380-470
Nut-Universal Joint - U-Bolt		3/8–24 17-26	7/16–20 30-40

Nomenclature	Bolt Size and Ft-Lbs		
Bolt and Nut – Parking Brake Drum to Universal Joint Flange		7/16–20 37-49	1/2–20 55-75
Bolt – U-Joint Cap	3/8–24 37-50 ①	7/16–20 58-78 ③	1/2–20 100-115 ①
Driveshaft Center Bearing Coupling to Support	40-50		
Bolt - Drive Shaft U-Joint to Rear Yoke	1/2–20 90-110 ①		
Bolt and Nut - U-Joint Adapter to Rear Axle	1/2–20 60-70		

① Mechanics ② Dana ③ Rockwell ④ Cleveland

CE1989-A

PART 15-62 Drive Shaft — Single Bearing Cap, Bolt Type and Bolted End Cap Type U-Joint

Applies to All Models Except F100-350, Econoline and Bronco

COMPONENT INDEX	Page	COMPONENT INDEX	Page
BEARING CAP AND BOLT TYPE UNIVERSAL JOINT		DRIVESHAFT – Contd.	
Removal and Installation	62-08	Removal and Installation	62-07
BOLTED END CAP TYPE UNIVERSAL JOINT		SPECIFICATIONS	62-09
Removal and Installation	62-08	TORQUE ARM SHIMMING	62-03
DRIVESHAFT		TRANSMISSION TO AUXILIARY TRANSMISSION UNIVERSAL JOINTS	
Alignment	62-02	Removal and Installation	62-08
Description	62-01	U-JOINT PHASING	62-02

CE2238-C

DESCRIPTION

The drive shaft or coupling shaft is composed of the universal joints, connecting shafts, and the attaching flanges. The number of shafts and universal joints used depends on the vehicle wheelbase.

All the vehicle universal joint spiders and sliding splines are equipped with lubrication fittings. These spiders and splines should be lubricated periodically using lithium grease ESA-M1C75-B

The majority of vehicles are equipped with center support bearings that are prelubricated and sealed for the life of the bearing. However, some vehicles have center support bearings equipped with lubrication fittings which should be lubricated periodically using lithium grease (C1AZ-19590-B).

Trucks equipped with an auxiliary transmission have a transmission to auxiliary transmission drive shaft to transmit the power from the conventional transmission to the auxiliary transmission. This assembly consists of two close-coupled universal joints (Fig. 1). All universal joints are of the needle-bearing type. The universal joint bearings are retained on the universal joint spiders by snap rings or U-bolts, or by bearing caps and bolts.

Drive shafts and coupling shafts are balanced; therefore, if the vehicle is to be undercoated, cover the drive shaft to prevent getting undercoating material on the shaft.

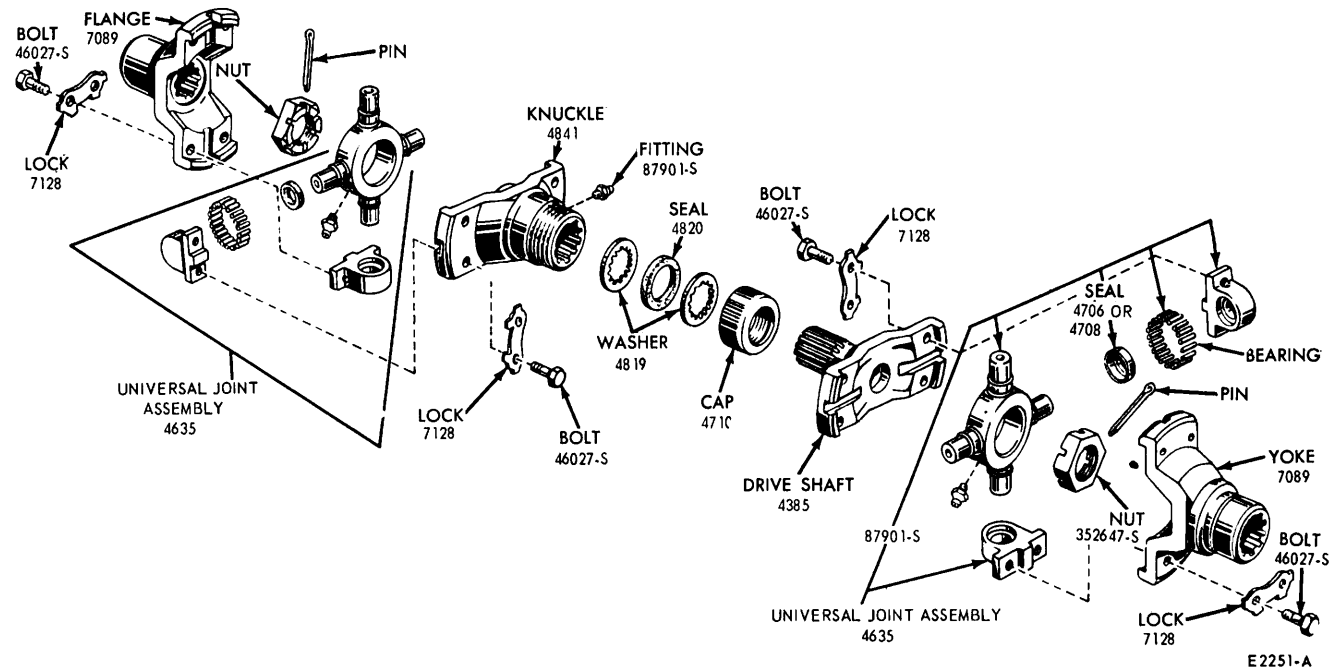

FIG. 1 Transmission-To-Auxiliary Universal Joints

ADJUSTMENTS

U-JOINT PHASING

When U-joint yokes are assembled to their shafts in the same plane, they are in phase (Fig. 2). When they are assembled to the shafts in different planes, they are out of phase (Fig. 3).

To obtain vibration-free operation, check and correct as necessary according to the following specifications (Fig. 2).

1. The U-joints between the main and auxiliary transmission must be in phase (Fig. 2).
2. The main drive shaft U-joint flanges are to be in phase as shown in Fig. 2.
3. Tandems which require a specific inter-axle drive shaft phasing, are identified by arrows which are stamped on slip yoke and stud end. The arrows must be in line as shown in fig. 3 (Eaton 30D-2 or 3 speed, Eaton 34D-2 or 3 speed, and Eaton 42D).

DRIVE SHAFT ALIGNMENT

To properly adjust drive line angles, a spirit level protractor is necessary. When angles are read from the 0 degree mark (for example, measuring inter-axle shaft angle) record and use the angle shown on the protractor since the 90 degree marks must be treated as 0 degree. For example, a protractor reading of 85 degrees is actually 5 degrees. See Fig. 4 or 5.

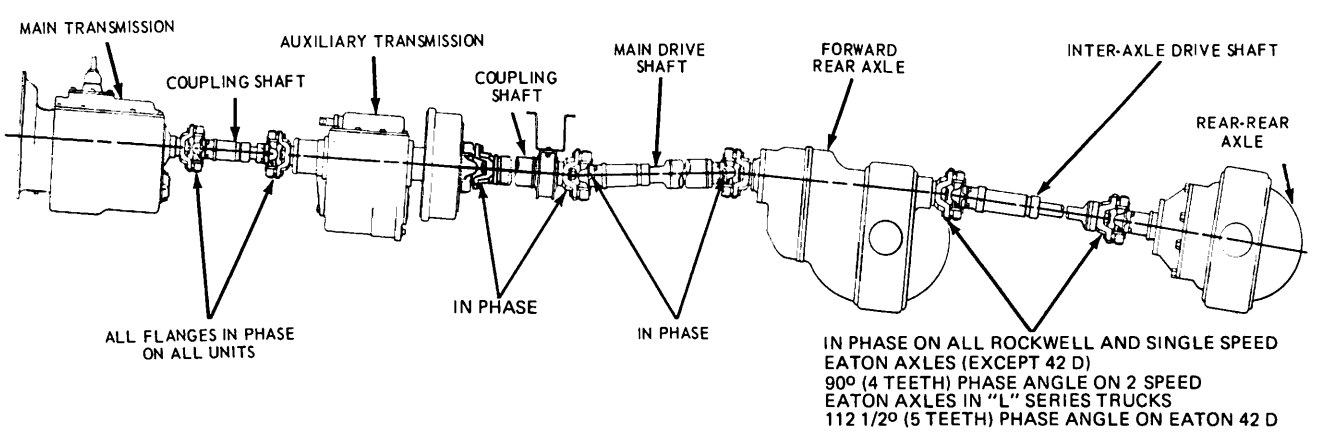

FIG. 2 Typical Tandem Axle Drive Shaft

All angles should be read within 1/4 degrees (15 minutes) and they should be measured with the protractor held plumb on a clean, flat surface.

The following procedures should be followed to check drive shaft angles and adjust as required:

1. Inflate all tires to the pressure at which they normally operate.
2. Park the empty vehicle on a surface which is fairly level — both front and rear and side to side. The truck must be in its normal operating position. Do not attempt to level the truck by jacking up the front or rear axles of the frame.
3. Check and record the angle of the engine and main transmission (Angle 1). This reading can be taken at the rear of the main transmission to the left of the bearing retainer or output flange. Lock the protractor at this reading.
4. **Remove the drive shaft or coupling shaft from the auxiliary transmission output flange.** Place the locked protractor on the output flange of the auxiliary transmission (Fig. 6) and adjust the auxiliary transmission as necessary to center the bubble. Loosen the front trunnion clamping bolt on the auxiliary transmission before attempting to adjust the angle of the auxiliary transmission. The adjusting bolts should be adjusted evenly so that the same amount of thread is showing on both bolts. This will put the angle of the auxiliary transmission (Angle 3) the same as the main transmission (Angle 1) (Fig. 7). The drive shaft or coupling shaft should be reinstalled **after** all driveline angles have been checked or adjusted.
5. Check and record the angle of the shaft between the main and auxiliary transmission (Angle 2). Take this reading by placing the protractor on the inter-transmission shaft. Angle 2 must be 1 degree less than Angle 1, plus or minus 1/2 degree. Adjust the engine or the auxiliary transmission to bring the inter-transmission shaft 1 degree less than Angle 1, plus or minus 1/2 degree, keeping the main and auxiliary transmissions parallel. Tighten the front clamping bolts on the auxiliary transmission.
6. From the chart in Fig. 8, add the difference angle to angle 1 recorded in step 3 above. Set the bubble protractor to this angle (Angle 1 plus difference angle) and reposition the forward rear axle as required to obtain this angle. Example: 300D tandem, Hendrickson rubber suspension.

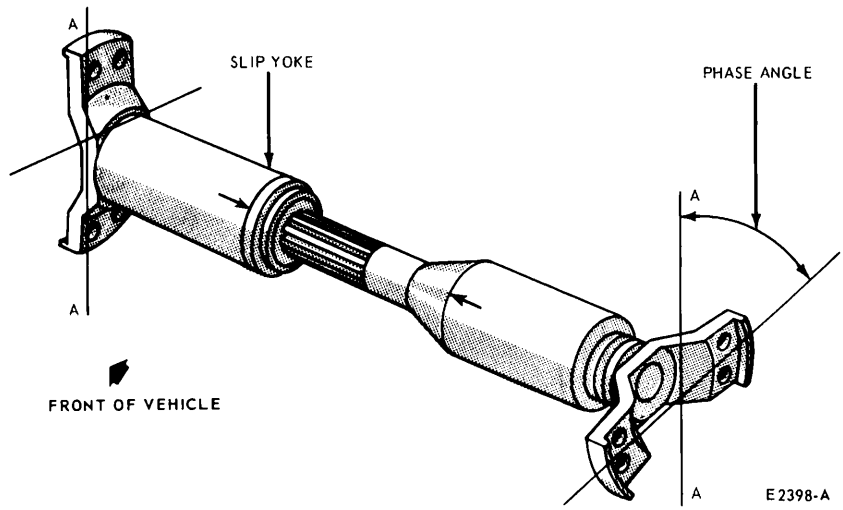

FIG. 3 Inter-Axle Phasing

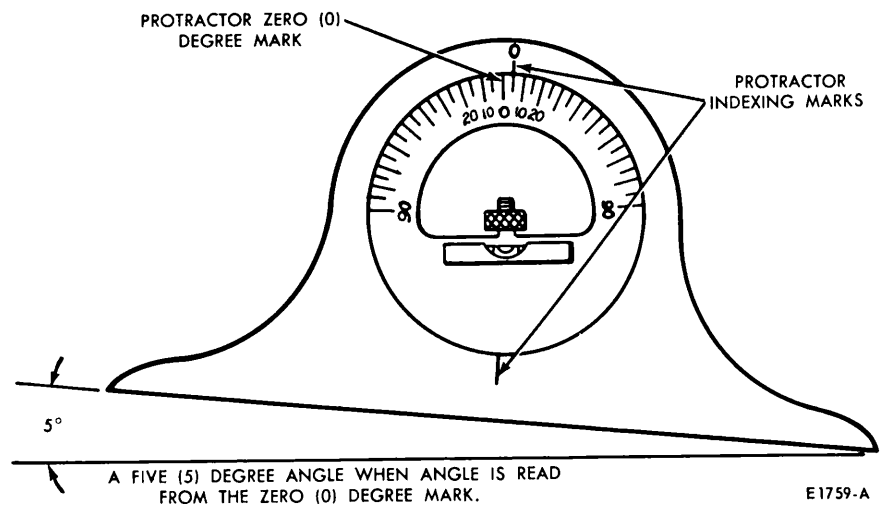

FIG. 4 Drive Shaft angle Read From Zero Mark — Horizontal Position

a. Vehicle to be empty (unloaded) and on reasonable even surface.
b. From the chart; forward rear axle is 1/2 degree more than main transmission angle. Rear joint angle G is 5 1/4 degree.
c. Main transmission angle is measured and found to be 5 1/2 degrees.
d. Set bubble protractor at 5 1/2; **1/2 equals 6 degrees and adjust forward rear axle to obtain this angle.**
e. Measure inter-axle shaft angle 5 and rear angle 6. Angle 5 must be greater than angle 6 by 5 1/2 degrees. Adjust rear axle to obtain this angle.

7. For axles listed under note (1) in Fig. 8, angle 5 must be greater than angle 6 (Fig. 9 illustrates this). For axles listed under note (2), angle 6 must be greater than angle 5 (Fig. 10 illustrates this). The difference of these two angles is equal to angle G.

Torque Arm Shimming

The adding or removing of shims from the forward rear axle torque arm will change angle 4. The 1/4 inch shims will change this angle by approximately 3/4 degree. The addition or removal of a 1/2 inch shim from rear axle torque arm will change angle G approximately 1 1/4 degree.

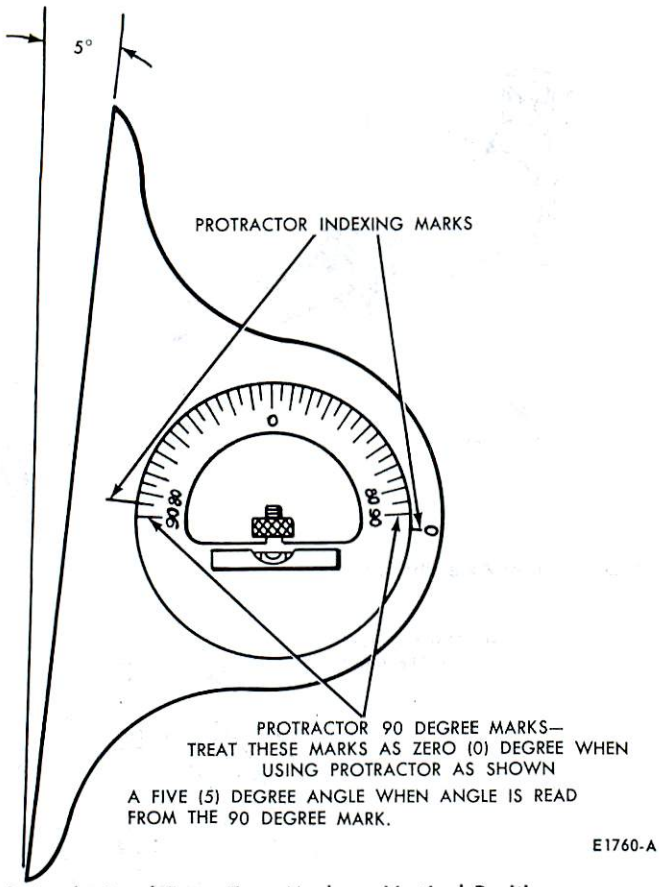

FIG. 5 Drive Shaft Angle Read From Zero Mark — Vertical Position

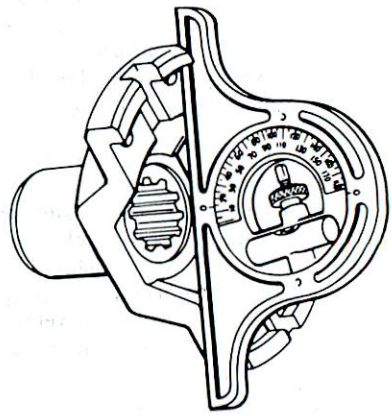

FIG. 6 Checking Output Flange Angle

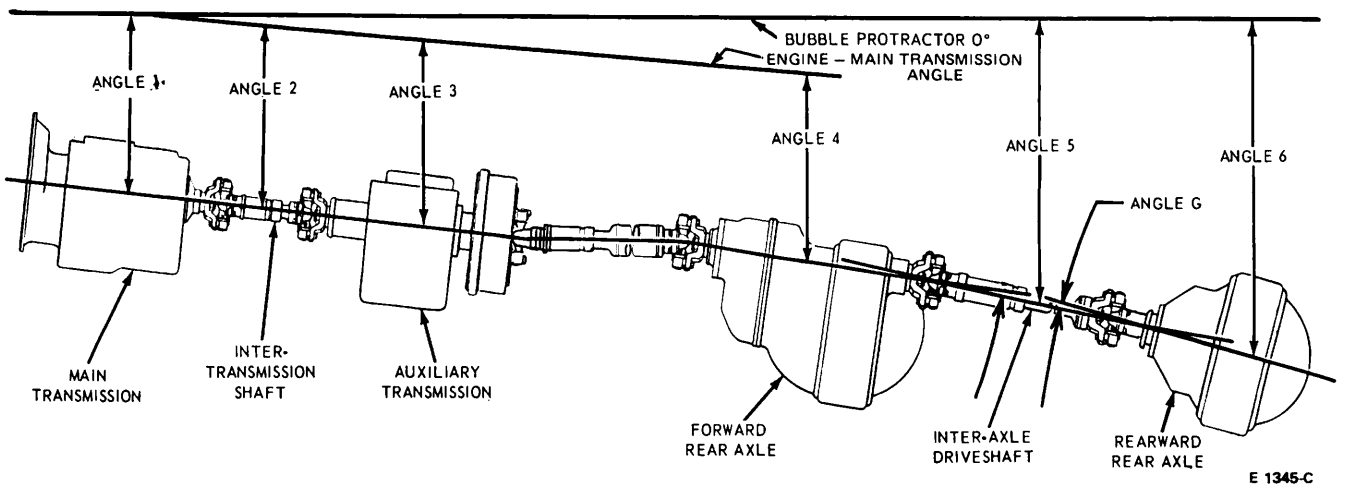

FIG. 7 Checking and Adjusting Drive Shaft Angles

Axle	Suspension	Model	Angle-Degrees	
			Difference Angle 4	U-Joint Angle G
30D①	Hend. Steel	CT Series	1 1/2	3
	Hend. Rubber		1/2	5 1/4
	Hend. Steel		1/2	5
	Hend. Ext. Leaf		1 1/2	4 1/4
34D①	34000 Lb.	CT Series		
	Hend. Steel		1 1/2	5 1/4
	Hend. Rubber		3/4	5 1/2
	Hend. Shear		1/2	5
	Hend. Ext. Leaf		1 1/4	5
	34000 Lb.	W-Series		
	Hend. Steel		2	3 1/2
	Hend. Rubber		1	5 1/4
	Hend. Ext. Leaf		1 3/4	4 1/2
SLHD② SQHD②	34000 Lb.	CT Series		
	Hend. Steel		1 1/4	4 1/4
	Hend. Rubber		1/4	3 1/2
	Hend. Shear		1/4	3 1/4
	Hend. Ext. Leaf		1 1/4	3 1/2
	34000 Lb.	W-Series		
	Hend. Steel		2	4
	Hend. Shear		1/2	3 3/4
	Hend. Ext. Leaf		1 1/4	4
30D②	Hend. Steel	L Series	1 1/2	3 1/2
	Hend. Rubber		3/4	3
	Hend. Ext. Leaf		1 1/2	3
34D② 38D②	34,000 Lbs.	L Series		
	Hend. Steel		1 1/2	3 3/4
	Hend. Rubber		1 1/2	3 1/4
	Hend. Ext. Leaf		1 1/2	3 1/4
38D②	Hend. 38000 Lbs. 50 Inch Walking Beam	L-Series	1-1/4	3-1/2
	Hend. 38000 Lbs. 60 Inch Walking Beam	L-Series	1-1/4	2-1/4
42D②	Hend. 44000 Lbs.	L-Series	1-1/4	3-3/4
50DP②	Hend. Steel 54 Inch Walking Beam	LTS	1-3/4	4-1/4
SLHD②	34,000 Lbs.	L Series		
	Hend. Steel		1 1/2	4 1/2
	Hend. Rubber		1 1/2	4
	Hend. Ext. Leaf		1 1/2	4
SQHD②	34,000 Lbs.	L Series		
	Hend. Steel		1 1/4	4 1/2
	Hend. Rubber		1 1/4	4
	Hend. Ext. Leaf		1 1/4	4
SQHD②	Hend. 38000 Lbs.	L-Series	1 1/4	4 1/4

①Angle G determine by subtracting angle 6 from angle 5 (angle 5 must be greater than angle 6).
②Angle G determine by subtracting angle 5 from angle 6 (angle 6 must be greater than angle 5).

All angles are ±1/4°
Difference angle-amount greater than engine or transmission angle.

FIG. 8 Tandem Axle Alignment Angles

CE1988-C

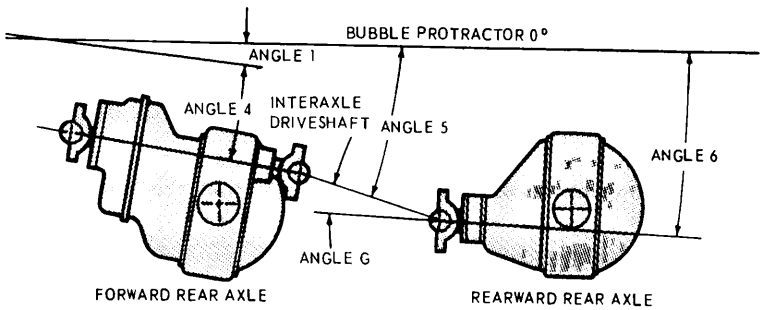

ANGLE 1 IS ENGINE-MAIN TRANSMISSION ANGLE
PINION ANGLE OF FORWARD REAR AXLE IS ANGLE 4 PLUS ANGLE 1.
ANGLE G IS ANGLE 5 LESS ANGLE 6
(ANGLE 5 IS GREATER THAN ANGLE 6)
TILTING REARWARD REAR AXLE BACKWARDS REDUCES ANGLE G.

E 2403-A

FIG. 9 Angle G-Reduction

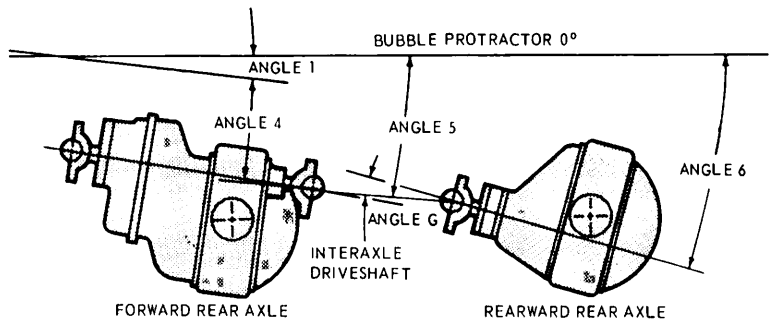

ANGLE 1 IS ENGINE-MAIN TRANSMISSION ANGLE
PINION ANGLE OF FORWARD REAR AXLE IS ANGLE 4 PLUS ANGLE 1
ANGLE G IS ANGLE 6 LESS ANGLE 5
(ANGLE 6 IS GREATER THAN ANGLE 5)
TILTING REARWARD REAR ANGLE BACKWARDS INCREASES ANGLE G

E 2404-A

FIG. 10 Angle G-Increase

REMOVAL AND INSTALLATION

DRIVE SHAFT

Removal

1. Disconnect the drive shaft from the flange at the rear axle.
2. If working on a vehicle equipped with a coupling shaft, slide the drive shaft off the coupling shaft splines. On certain Mechanics, Rockwell and heavy duty Spicer assemblies remove the attaching bolts.
3. Working from the center support nearest to the rear of the vehicle, remove the two attaching bolts and support the bearing. Different types of support brackets are used. Some have elongated mounting holes. This permits close adjustment (medium vehicles).
4. If working on a vehicle equipped with more than one coupling shaft, disconnect the rear shaft from the front one.
5. Remove the remaining center support attaching bolts and support the bearing.
6. Remove the nuts that attach the coupling shaft flange to the transmission and remove the shaft and center bearing as an assembly.
7. Thoroughly clean old grease and dirt from the drive shaft splines and then check the splines for wear, warpage, and cracks. If the shaft is worn, warped, or cracked, replace it.

Using a suitable cleaning fluid, clean all dirt from the slip yoke, slip yoke splines, and shaft splines. Carefully inspect the slip yoke splines for wear or evidence of twisting. Check the clearance between the slip yoke splines and the shaft splines.

Wash all parts except the sealed ball bearing and rubber cushion in suitable cleaning fluid. **Do not immerse the sealed bearing in cleaning fluid.** Wipe the bearing and cushion clean with a cloth dampened with cleaning fluid.

Check the bearing for wear or rough action by rotating the inner race while holding the outer race. If wear or roughness is evident, replace the bearing.

Examine the rubber cushion for evidence of hardening, cracking, or deterioration. Replace it if damaged in any way.

Grease retainers and slingers are serviced only as a part of the bearing assembly.

Installation

1. Connect the front flange or joint of the drive shaft or coupling shaft to the flange on the transmission. Torque the nuts to specifications.
2. Secure the center bearing to the frame bracket with the center support and attaching bolts. Note that L-Series vehicles use adjustable 2-piece center bearing support brackets. Torque the bolts to specification.
3. If working on a truck with more than one coupling shaft, connect the rear shaft to the forward one, then install the remaining center support. All splines should be lubricated with ESA-M1C75-B
4. Connect the rear universal to the rear axle flange and torque the nuts or bolts to specifications. Be sure all drive shaft and coupling shaft yokes are properly in phase.

BEARING CAP AND BOLT TYPE UNIVERSAL JOINT (EXCEPT L-LN-W, AND 9000 SERIES)

Removal

1. Remove the capscrews which attach the bearing caps to the universal joint flange and yoke. Remove the bearing caps and bearings from the spider.
2. Remove the grease seals, and retainers, from the spider.

Wash all parts in cleaning fluid. Make sure the lubricant passages in the journal cross are clean. Check the needle bearings and journals for evidence of wear or excessive heat.

3. Soak the needle bearings and cages in a commercial cleaning fluid to soften particles of hardened grease. Then, wash these parts in cleaning fluid using a stiff brush if necessary to remove all old lubricant. Check each bearing for missing rollers.
4. After the needle bearing assemblies are thoroughly clean, apply clean lubricant to the rollers. Rotate them on the trunnion of the journal to check wear. Fill the journal passages with ESA-M1C75-B lubricant and fill the bearings approximately 1/3 full of ESA-M1C75-B lubricant before reassembly.

Installation

1. To install, pack the recess in the spider with the recommended lubricant (ESA-M1C75-B).
2. Install the grease seals on the spider.
3. Position the needle bearings in the bearing caps, then position the caps on the spider. Place the spider on the yokes, and then install the bearing caps. Torque the bolts to specifications.
4. Secure the locks to the yokes with capscrews.
5. Lubricate the universal joints with long life lithium grease (C1AZ-19590-B).

BOLTED END CAP TYPE UNIVERSAL JOINT (L-LN-W, AND 9000 SERIES)

Removal

1. Bend the tangs of the lock plates away from the capscrews.
2. Remove the capscrews and lock plates that attach the bearing caps to the universal joint flange. Remove the bearing caps and bearings from the flange and spider (Fig. 11).

If the bearing and cap are integral, tap the bearing cap lightly clockwise and then counter clockwise and with a screwdriver, pry under first one end of the bearing cap and then the other until the bearing comes out of the yoke. Turn the joint over and remove the opposite bearing in the same manner. If the bearing cap and bearing are separate, the bearing cap will come off with a light tap.

Remove the bearings by first tapping with a soft round drift on the exposed face of one bearing until the opposite bearing comes out. Turn the joint over and tap the exposed end of the journal cross pin until the opposite bearing is free.

3. Remove the spider. All burrs on the bearing cap or yoke must be removed before placing spider in the yoke.
4. Wash all parts in cleaning fluid. Make sure the lubricant passages in the journal cross are clean. Check the needle bearings and journals for evicence of wear or excessive heat.

Soak the needle bearings and cages in a commercial cleaning fluid to soften particles of hardened grease. Then, wash these parts in cleaning fluid using a stiff brush if necessary to remove all old lubricant. Check each bearing for missing rollers.

After the needle bearing assemblies are thoroughly clean, apply clean lubricant to the rollers. Rotate them on the trunnion of the journal to check wear. Fill the journal passages with ESA-M1C75-B lubricant and fill the bearings approximately 1/3 full of ESA-M1C75-B lubricant before reassembly.

Installation

1. Position the needle bearings in the bearing caps.
2. Position the spider in the flange and install the bearing caps through the yoke and onto the spider. Press or tap with a soft drift.
3. Position the lock plates to the bearing caps and secure them with the capscrews. Torque the screws to specifications. Bend the tangs of the locks up against the capscrews.
4. Lubricate the universal joints with long life lithium grease ESA-M1C75-B.

TRANSMISSION TO AUXILIARY TRANSMISSION UNIVERSAL JOINTS

Removal

1. To replace the transmission to auxiliary transmission input shaft U-joint assembly (Fig. 1), remove the universal bearing cap bolts from the auxiliary transmission input shaft yoke and the transmission output shaft yoke.
2. After the universal joint assembly has been removed from the truck, separate the two universal joints by loosening and removing the dust cap, washers, and seal from the U-

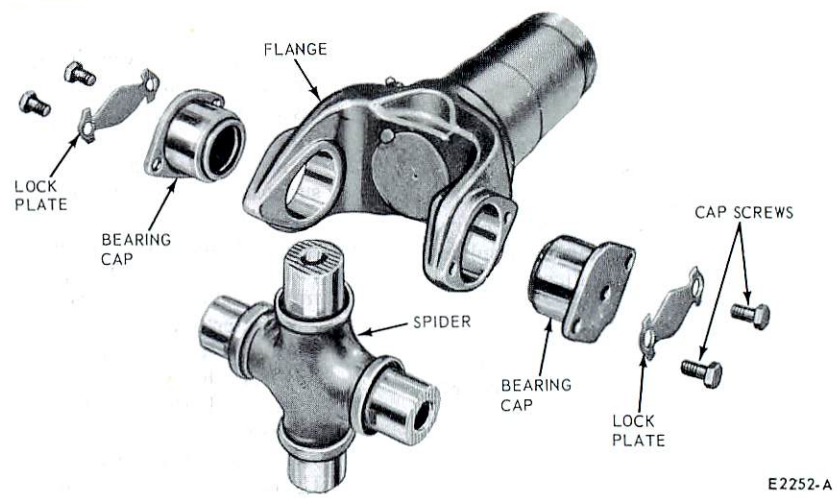

FIG. 11 Bolted End Cap Type UniversalJoint—Disassembled

joint knuckles. Pull the assemblies apart.

3. Remove the bearing caps and spiders from their respective yokes.

Installation

1. Clean and inspect the spiders, bearings, and shields. Replace with new parts as required, and assemble the spiders onto the U-joint knuckle and coupling shaft respectively.
2. Install the dust cap, washers, and seal over the splined end of the drive shaft. Install the drive shaft into the knuckle so that the universal joint spiders are on the same plane. Tighten the dust cap on the knuckle until it is snug.
3. Install the universal joint with the slip yoke toward the front of the vehicle. Be sure the companion flanges on the transmissions are on the same plane. Attach the spider bearing caps to the respective flanges with bolts. Torque the bolts to specifications.
4. Lubricate the universal joints with long life lithium grease (C1AZ-19590-B).

SPECIFICATIONS

DRIVESHAFT – TORQUE LIMITS

Nomenclature	Bolt Size and Ft-Lbs		
Bolt-Yoke to Coupling Shaft or Intermediate Shaft	3/4–16 175-240 ① 5/8–18 148-164 ②	7/8–14 250-300 ③	1–20 160 ④
Nut-U-Joint Flange to Main and Aux. - Input or Output Shaft	1–20 90-130 2-16 425-525	1 1/4–18 350-420	1 1/2–18 380-470
Nut-Universal Joint - U-Bolt		3/8–24 17-26	7/16–20 30-40

Nomenclature	Bolt Size and Ft-Lbs		
Bolt and Nut – Parking Brake Drum to Universal Joint Flange		7/16–20 37-49	1/2–20 55-75
Bolt – U-Joint Cap	3/8–24 37-50 ①	7/16–20 58-78 ③	1/2–20 100-115 ①
Driveshaft Center Bearing Coupling to Support	40-50		
Bolt - Drive Shaft U-Joint to Rear Yoke	1/2–20 90-110 ①		
Bolt and Nut - U-Joint Adapter to Rear Axle	1/2–20 60-70		

① Mechanics ② Dana ③ Rockwell ④ Cleveland

CE1989-A

PART 15-66 Drive Shaft-Double Cardan Type U-Joints

Applies to Bronco Only

COMPONENT INDEX	Page	COMPONENT INDEX	Page
DOUBLE CARDAN JOINT		DRIVE SHAFT - Continued	
Assembly	66-02	Removal and Installation	66-01
Disassembly	66-02		
DRIVE SHAFT		SPECIFICATIONS	66-03
Description	66-01		

DESCRIPTION

The Bronco drive shaft assemblies are of the double cardan type which incorporates two universal joints, a centering socket yoke, and a center yoke at the transfer case end of each shaft (Fig. 1). A single universal joint is used at the axle end of the shafts.

The universal joint spiders and sliding splines are equipped with lubrication fittings. These spiders and splines should be lubricated periodically using lithium grease (C1AZ-19590-B).

All drive shafts are balanced. Therefore, if the vehicle is to be undercoated, cover the drive shaft to prevent getting undercoating material on the shaft.

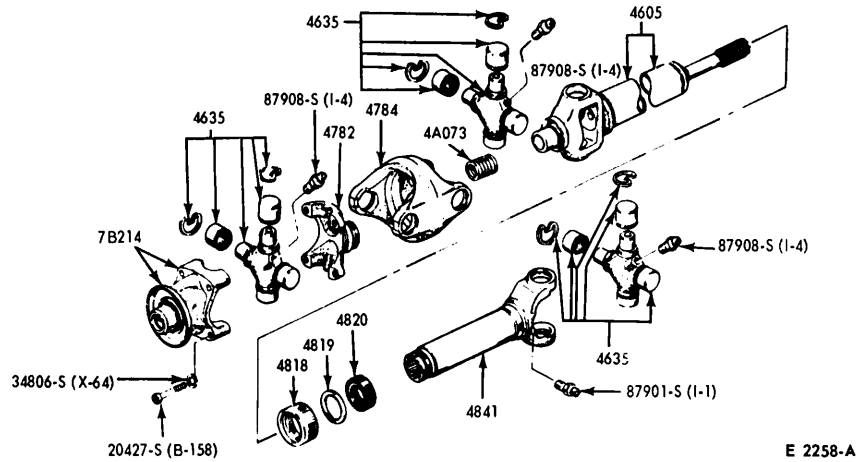

FIG. 1 Drive Shaft Disassembled — Bronco

REMOVAL AND INSTALLATION

DRIVE SHAFT

Removal

1. To remove the rear drive shaft, disconnect the double cardan joint from the flange at the transfer case and the single U-joint from the flange at the rear axle. Remove the drive shaft.
2. To remove the front drive shaft, disconnect the double cardan joint from the flange at the transfer case and the single U-joint from the flange at the front axle. Remove the drive shaft.

Installation

1. To install the front drive shaft, position the single U-joint end of the drive to the front axle and install the U-bolts and nuts.
2. Position the double cardan joint to the transfer case and install the four bolts and lock washers.
3. Torque all the bolts and nuts to specifications.
4. To install the rear drive shaft, position the single U-joint end of the drive shaft to the rear axle and install the U-bolts and nuts.
5. Position the double cardan joint to the transfer case and install the four bolts and lock washers.
6. Torque all the bolts and nuts to specifications.

DISASSEMBLY AND ASSEMBLY

DOUBLE CARDAN JOINT

Disassembly

1. Mark the position of the spiders, the center yoke, and the centering socket yoke as related to the stud yoke which is welded to the front of the drive shaft tube. **The spiders must be assembled with the bosses in their original position to provide proper clearance.**
2. Remove the snap rings that secure the bearings in the front of the center yoke.
3. Position the tool as shown in Fig. 2. Thread the tool clockwise until the bearing protrudes approximately 3/8 inch out of the yoke.

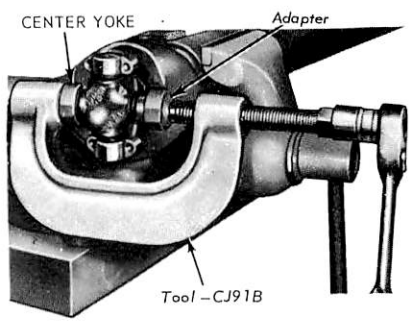

FIG. 2 Partially Pressing Bearing From Center Yoke

4. Remove the drive shaft from the vise.
5. Tighten the bearings in the vise and drive on the center yoke as shown in Fig. 3 to free it from the bearing.

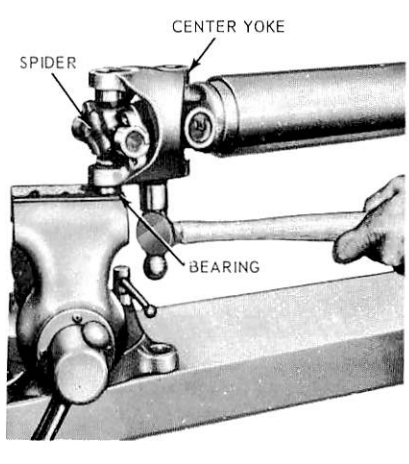

FIG. 3 Removing Bearing From Center Yoke

6. Lift the two bearings (Fig. 4) from the spider at this time.

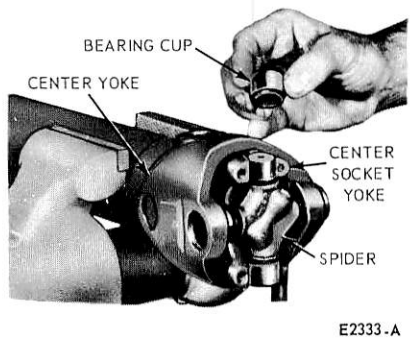

FIG. 4 Removing Bearing Cup From Centering Yoke Socket

7. Reposition the tool on the yoke and move the remaining bearing in the opposite direction so that it protrudes approximately 3/8 inch out of the yoke.
8. Grip the bearing in a vise. Drive on the center yoke to free it from the bearing (Fig. 3).
9. Remove the spider from the center yoke.
10. Pull the centering socket yoke off the center stud (Fig. 5). Remove the rubber seal from the centering ball stud.

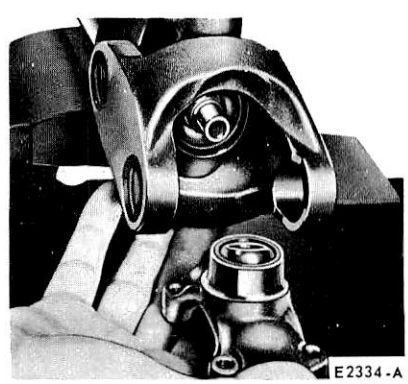

FIG. 5 Removing Center Socket Yoke

11. Remove the snap rings from the center yoke and from the drive shaft yoke.
12. Position the tool on the drive shaft yoke (Fig. 6) and press the bearing outward until the inside of the center yoke almost contacts the slinger ring at the front of the drive shaft yoke. Pressing beyond this point can distort the slinger ring. The arrow in Fig. 7 illustrates the interference point.
13. Clamp the exposed end of the bearing in a vise and drive on the center yoke with a soft-faced hammer to free it from the bearing.
14. Reposition the tool and press on the spider to remove the opposite bearing.
15. Remove the center yoke from the spider.
16. Remove the spider from the drive shaft yoke in the same manner.
17. Clean all serviceable parts in cleaning solvent. If using a repair kit, install all of the parts supplied in the kit. If the drive shaft is damaged, replace the complete shaft to be assured of a balanced assembly.

Assembly

1. To assemble the double cardan joints, position the spider in the drive shaft yoke. Make sure the spider bosses (or lubrication plugs on kits) will be in the same position as originally installed. Press in the bearing cups. Install the snap rings.
2. Position the center yoke over the spider ends and press in the bearing cups. Install the snap rings.
3. Install a new seal on the centering ball stud. Position the centering socket yoke on the stud.
4. Place the front spider in the center yoke. Make sure the spider bosses (or lubrication plugs on kits) are properly positioned. Press in the bearing cups and install the snap rings.
5. Apply pressure on the centering socket yoke and install the remaining bearing cup.
6. On kits, remove the plug from each spider and lubricate the universal joints. Reinstall the plug in each spider.

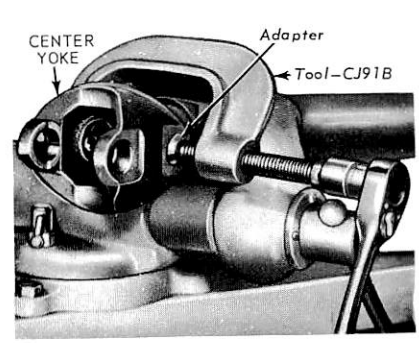

FIG. 6 Removing Bearing From Rear of Center Yoke

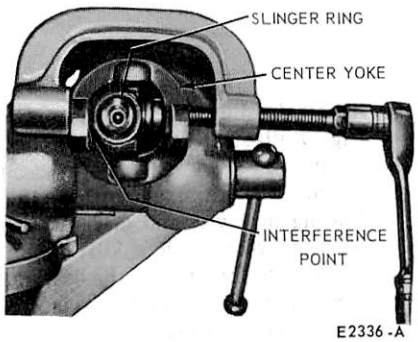

FIG. 7 Center Yoke Interference Point

TORQUE LIMITS

Nomenclature	Bolt Size and Ft-Lbs
Drive Shaft-to-Transfer Case Bolts	5/16–24 20-25
Drive Shaft-to-Front and Rear Axle U-Bolt Nuts	5/16-24 10-17

CE 2241-A

Clutch and Manual Transmission

GROUP 16

PART 16-01 PAGE

General Clutch Service 16-01-01

PART 16-02

Clutch 16-02-01

PART 16-03

Mechanical Clutch Linkage 16-03-01

PART 16-04

Hydraulic Clutch Linkage 16-04-01

PART 16-10

General Manual Transmission Service 16-10-01

PART 16-11

Ford Three Speed Transmission 16-11-01

PART 16-13

Warner T87G Three Speed Transmission 16-13-01

PART 16-23

Warner T18 Four Speed Transmission 16-23-01

PART 16-24

Warner T19 Four Speed Transmission 16-24-01

PART 16-25

New Process 435 Four Speed Transmission .. 16-25-01

PART 16-26

New Process 542 Five Speed Transmission .. 16-26-01

PART 16-40

Clark 280 Five Speed Transmission 16-40-01

PART 16-41

Clark 380 Five Speed Transmission 16-41-01

PART 16-42

Spicer 5000 Five Speed Transmission 16-42-01

PART 16-43 PAGE

Spicer 6000 Five Speed Transmission 16-43-01

PART 16-44

Spicer 8000 Five Speed Transmission 16-44-01

PART 16-45

Fuller 5H74 Five Speed Transmission 16-45-01

PART 16-46

Fuller T905 Five Speed Transmission 16-46-01

PART 16-60

Fuller RT610 Ten Speed Transmission 16-60-01

PART 16-61

Fuller RT and RTO 910 Ten Speed Transmission 16-61-01

PART 16-62

Fuller RTO 9513 Thirteen Speed Transmission 16-62-01

PART 16-64

Spicer P8516 Sixteen Speed Compound Transmission 16-64-01

PART 16-70

Spicer Auxiliary Transmissions 16-70-01

PART 16-80

Dana 20 Transfer Case 16-80-01

PART 16-81

Dana 21 Transfer Case 16-81-01

PART 16-82

Dana 24 Transfer Case 16-82-01

PART 16-83

Rockwell T223-C9 Transfer Case 16-83-01

PART 16-84

New Process Transfer Case 16-84-01

PART 16-01 General Clutch Service

Applies To All Models

COMPONENT INDEX	Page	COMPONENT INDEX	Page
CLUTCH DISC		PRESSURE PLATE AND COVER	
Cleaning and Inspection	01-02	Cleaning and Inspection	01-02
FLYWHEEL HOUSING ALIGNMENT			
Correction	01-01	RELEASE BEARING	
Inspection	01-01	Cleaning and Inspection	01-02
PILOT BUSHING AND BEARING			
Cleaning and Inspection	01-04	SPECIFICATIONS	01-04

ADJUSTMENTS

FLYWHEEL HOUSING ALIGNMENT

Alignment of the flywheel housing bore and rear face with the engine should be checked as a possible cause of any of the following troubles: excessive transmission gear wear, transmission jumping out of gear, especially third gear, clutch pedal vibration or scrubby pedal feel, drive line vibration, excessive pilot bushing wear, or excessive clutch spin time. Whenever any of the above problems are identified, the clutch housing should be given a complete inspection.

INSEPCTION

All Engines

1. With the clutch release bearing removed, install the indicator pilot tool (T57T-66399-A) as shown in Fig. 1.
2. Clean the faces of the flywheel housing bolt bosses, and remove all burrs, nicks, and paint from the mating surfaces.
3. Install the dial indicator on the pilot and adjust the holder so the button will contact a circumference just inside of the transmission mounting holes on the machined surface.
4. Push the flywheel forward to remove crankshaft end play. Set the dial indicator face to read zero.
5. Remove the spark plugs to relieve compression.
6. Rotate the engine crankshaft through one revolution. The crankshaft must be held in the forward position while rotating it. The indicator reading must return to zero after one revolution to insure that no end play has affected the reading. Note the indicator reading (Fig. 1). The maximum misalignment of the transmission mounting face with the C/L of the crankshaft shall be 0.001 total indicator reading (T.I.R.) per inch of checking radius.
7. Position the dial indicator to check bore alignment (Fig. 1). the bore must be clean and free of burrs, nicks, and paint.
8. Rotate the crankshaft through one revolution and note the indicator reading (Fig. 1). The maximum misalignment of the clutch housing bore with the C/L of the crankshaft shall be 0.001 total indicator reading (T.I.R.) per inch of transmission shaft penetration in the clutch housing bore.

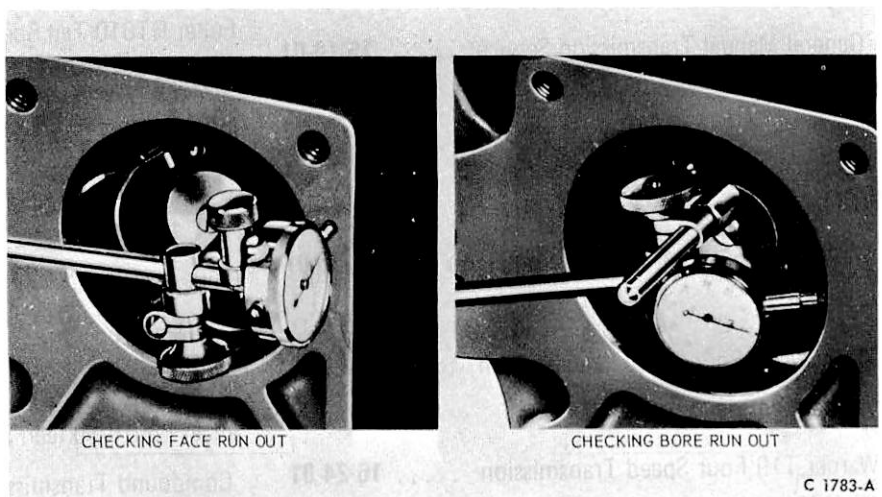

FIG. 1 Flywheel Housing Alignment Check

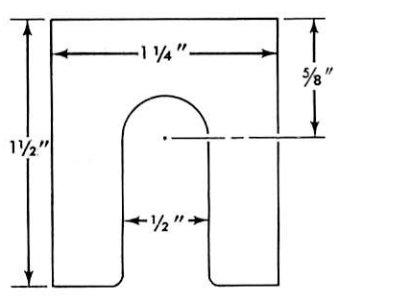

FIG. 2 Fabricated Flywheel Housing shim

9. Remove the dial indicator from the crankshaft and housing.
10. Install the spark plugs and connect the wires.

CORRECTION

Since any change in face alignment will change bore alignment, it may be possible to correct bore alignment by changing face alignment. Face alignment can be changed by shimming between the flywheel housing and engine. Fig. 2 shows the type of shim which can be fabricated.

The shim required is one half the maximum (minus) indicator reading, and should be located at the point of maximum minus indicator reading.

If both the bore and face alignment are out of limits, shim between the flywheel housing and engine to bring face alignment within limits. Check the bore alignment.

If bore alignment is out of limits and face alignment is within limits, shim the flywheel housing to the limit of face misalignment and check the bore alignment. If it is not within limits, replace the housing.

CLEANING AND INSPECTION

CLUTCH

RELEASE BEARING

Wipe all oil and dirt off the release bearing. The bearing is prelubricated and should not be cleaned with solvent. On all F-100-350, Parcel Delivery, E-100-300 and V-100 Series trucks, the clutch release bearing and hub should be serviced as a single unit. Do not disassemble for inspection or replacement.

Inspect the release bearing assembly for burrs which may cause the assembly to drag or bind on the transmission bearing retainer. Any such burrs should be cleaned up with fine crocus cloth. If burrs are found, inspect the transmission input shaft bearing retainer for evidence of scoring. Any scoring should be polished out with crocus cloth. Coat the bearing retainer with a thin film of lithium-base grease (C1AZ-19590-B). If the release bearing and hub assembly has been removed on F-100-350 and Parcel Delivery Series, lubricate the release lever fulcrum and release fingers with lithium grease (C1AZ-19590-B). Also fill the release bearing annular groove and lubricate the release lever retaining spring clips with lithium grease (C1AZ-19590-B).

Hold the bearing inner race and rotate the outer race while applying pressure to it. If the bearing rotation is rough or noisy, replace the bearing.

Most release bearing failures are caused by improper clutch pedal adjustments. If the clutch linkage does not have enough free travel, the release bearing will constantly touch the release fingers and will spin whenever the engine is running.

Release bearing failure can be caused by the release lever contact points being out of plane. Check the wear on the release bearing assembly where the release lever contacts it.

If one side of the assembly shows more wear than the other, the release lever is bent out of plane, or is not centering on the bracket on the flywheel housing.

Misalignment between the engine and transmission can cause release bearing failure. Other symptoms of misalignment are: transmission jumping out of gear, drive shaft vibration, excessive wear in the pilot bushing, excessive clutch disc spin time resulting in gear clash, and excessive transmission gear wear.

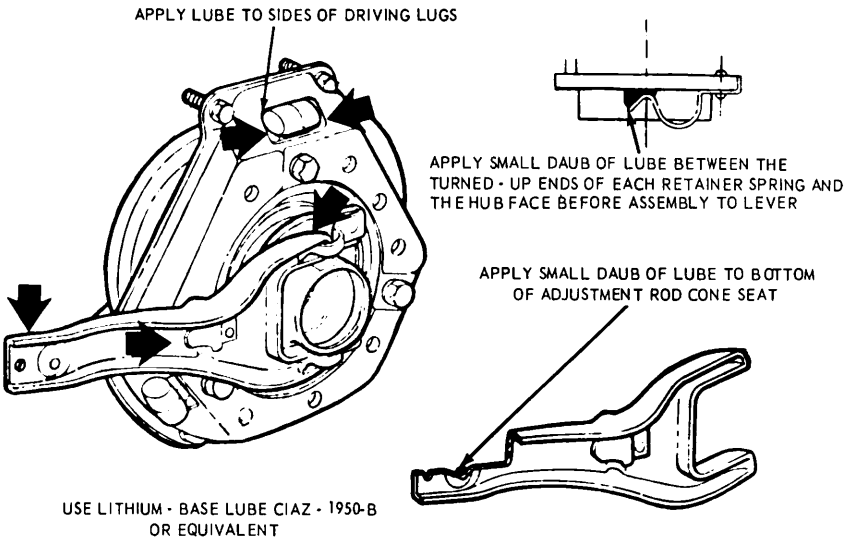

FIG. 3 Clutch Lubrication Points

PRESSURE PLATE AND COVER

The pressure plate should be lubricated with a lithium-base grease (C1AZ-19590-B) between the driving lugs and the edges of the pressure plate openings as shown in Fig. 3. Depress the pressure fingers fully, apply the lubricant, and then move the fingers up and down until the lubricant is worked in. **Do not apply excessive lubricant.**

Inspect the surface of the pressure plate for burn marks, scores, flatness or ridges (Fig. 4). If the pressure plate is badly heat-checked or deeply scored, replace the pressure plate and cover assembly. Clean the pressure plate and the flywheel surfaces with suitable commercial solvent to be sure the surfaces are free from any oil film. **Do not use cleaners with a petroleum base, and do not immerse the pressure plate in the solvent.**

If a substantial difference in finger wear exists, the heavily worn finger is binding. Replace the pressure plate.

CLUTCH DISC

Inspect the clutch disc facings for oil or grease. **Eliminate the source of any oil or grease before replacing the disc.** An excessive amount of grease on the bearing hub will find its way to the disc facings. Too much lubricant in the

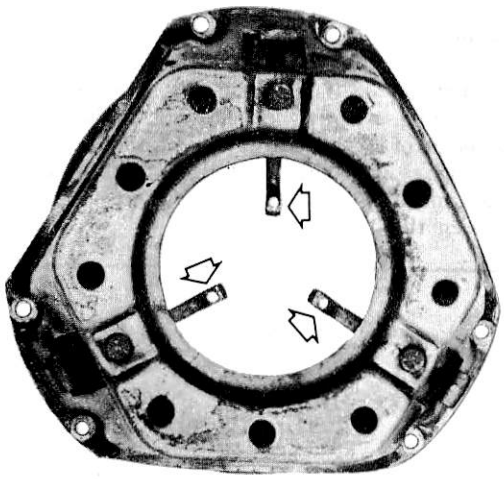

NORMAL FINGER WEAR

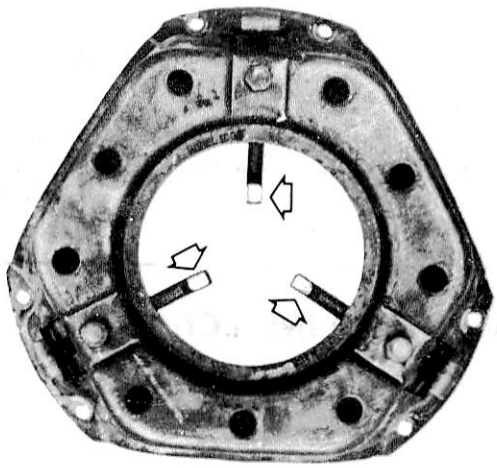

EXCESSIVE FINGER WEAR

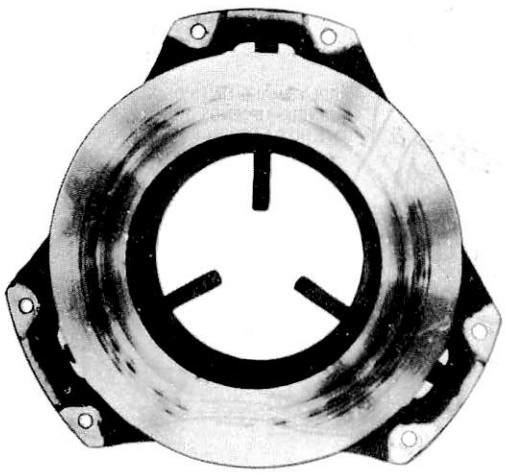

SLIGHT CHATTER MARKS

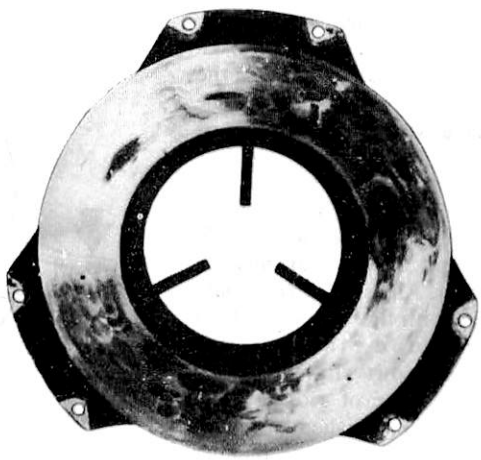

EXCESSIVE BLUEING AND CHATTER

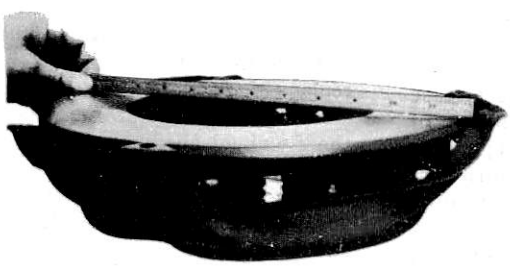

EXCESSIVE WARPAGE

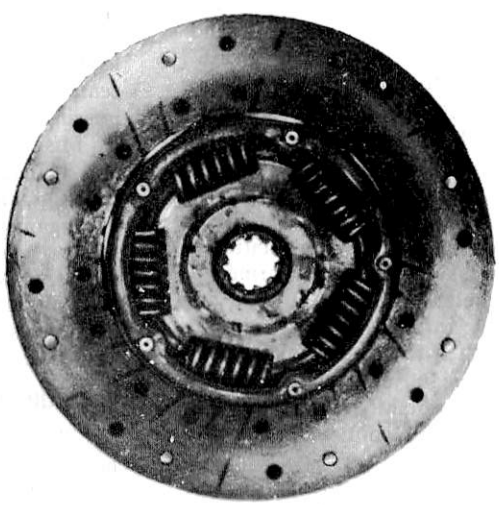

WEAR PATTERN FROM
WARPED PRESSURE PLATE

C 2579-A

FIG. 4 Clutch Inspection

transmission or a plugged transmission vent will force the transmission lubricant out the input shaft and onto the disc facings. Leaking rear engine seals or loose or unsealed flywheel attaching bolts will also allow engine oil to flow onto the disc facings.

Inspect the clutch disc for worn or loose facings (Fig. 4). Check the disc for distortion and for loose rivets at the hub. Check for broken springs. **Springs loose enough to rattle will not cause noise when the vehicle is operating.**

Replace the disc if any of these conditions are present. Be especially careful when installing a new disc to avoid dropping it or contaminating it with oil or grease.

PILOT BEARING (SOLID TYPE)

Check the fit of the clutch pilot bearing in the bore of the crankshaft. The bearing is pressed into the crankshaft and should not be loose. A pilot bearing that is glazed, worn or dry, due to insufficient lubricant, often results in a temporary objectionable start-up squeal or chirping noise as the clutch is engaged or disengaged.

If inspection of the pilot bearing I.D. bore or transmission input shaft pilot shows a varnished, glazed or discolored coating, replace the bushing. Inspect the inner surface of the bearing for excessive wear or a bell-mouthed condition. Replace the bearing if it is worn or damaged. A new clutch pilot bearing normally does not require lubricant. However, due to long storage periods, it may lose some of the lubricant pressed into the bearing in manufacture. It is therefore recommended that the new bearing be soaked in SAE 30 non-detergent type motor oil for a minimum of one-half hour before installation. Wipe off all excessive oil before installing. Do not lubricate with grease of any type.

PILOT BEARING (BALL TYPE)

Check the fit and rotation of the clutch pilot bearing in the bore of the crankshaft. Replace the bearing if worn or damaged.

Inspect the pilot bearing for roughness, evidence of overheating or loss of lubricant. Replace if any of these conditions are found.

Coat the pilot bearing bore in the crankshaft with a small quantity of lithium base grease. **Avoid using too much lubricant because it may be thrown onto the clutch disc when the clutch revolves. Install the bearing with the shielded side of the bearing toward the clutch.**

SPECIAL TOOLS

Tool No.	Description		Tool No.	Description
T64T-7550-A	Clutch Disc Pilot		T58L-101-A	Universal Puller Attachment
T58T-7550-A	Clutch Disc Pilot (Double Disc)		Tool-7660-G	Clutch Pilot Bearing Replacer
T61T-7550-A	Clutch Disc Pilot (Double Disc)		T65L-7660-A	Installer – Clutch Pilot Bearing
T59L-100-B	Remover – Clutch Pilot Bearing			

CC1050-C

PART 16-02 Clutch

COMPONENT INDEX	Page	COMPONENT INDEX	Page
INTERNAL CLUTCH ADJUSTMENT		DOUBLE-DISC CLUTCH – 13 INCH	
MULTIPLE-DISC	02-01	Installation	02-03
SINGLE DISC CLUTCH		Removal	02-03
Installation	02-02	DOUBLE-DISC CLUTCH – 14 INCH	
Removal	02-02	AND 15-1/2 INCH	
SINGLE-DISC CLUTCH – 14 INCH		Installation	02-09
Installation	02-03	Removal	02-09
Removal	02-02		

ADJUSTMENTS

MULTIPLE DISC TYPE CLUTCH

INTERNAL ADJUSTMENT

The linkage on a 14 or 15 1/2 inch multiple disc clutch (Figs. 7 and 8) should not be adjusted to compensate for clutch facing wear. Linkage should only be reset to provide proper free-pedal after the internal clutch adjustment has been made. Proper linkage settings are given in Parts 16-03 and 16-04.

1. **To make an internal clutch adjustment, remove the inspection cover from the bottom of the clutch housing.**
2. Disconnect the retracting spring. Holding the release lever against the release bearing, measure the distance between the release bearing and the clutch spring hub on models with a synchronized transmission. On models with non-synchronized transmissions, measure the distance between the release bearing and the clutch brake. On vehicles equipped with a 14 inch or 15 1/2 inch two plate clutch, the dimension between the release bearing and the clutch spring hub should be 9/16-5/8 inch. the dimension between the release bearing and the clutch brake should be 1/2 inch (Fig. 1). On vehicles equipped with a 14 inch single plate clutch, the dimension between the release bearing and the clutch spring hub should be 11/32-13/32 inch.

   On all Spicer type clutches, also adjust the adjusting ring to provide a 1/8 inch clearance between the release yoke fingers and the release bearing (Fig. 2).
3. Adjust the clutch assembly by rotating the engine flywheel until the adjusting ring lock and bolt are exposed. Remove the bolt and lock (Fig. 3).
4. Hold or block the clutch pedal in the released position.
5. Use a pry bar to turn the adjusting ring (Fig. 3) counterclockwise (looking from rear of vehicle) to move the release bearing toward the flywheel; or clockwise to move the release bearing away from the flywheel. Rotation or movement of one lug position will move the release bearing approximately 1/32 inch.
6. Remove the clutch pedal block to engage the clutch.
7. Recheck the clearance as outlined in step 2. Readjust if necessary. As a final check for adequate and proper clutch adjustment, measure the distance between the centerline of the pedal pad to the firewall in the engaged position. If the distance checks 3 1/4-3 1/2 inch, the internal adjustment on the clutch is proper. Otherwise, repeat steps 2, 3, 4 and 5 above so that the specified above tolerance is obtained.
8. After the clutch has been properly adjusted, install the lock and bolt.
9. Recheck the slave cylinder push rod-to-release lever clearance if so equipped.
10. Connect the retracting spring and install the inspection cover on the clutch housing.

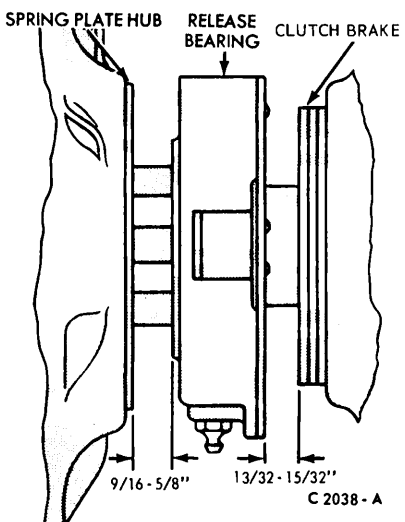

FIG. 1 Adjustment Dimensions—14 Inch Double-Disc Clutch

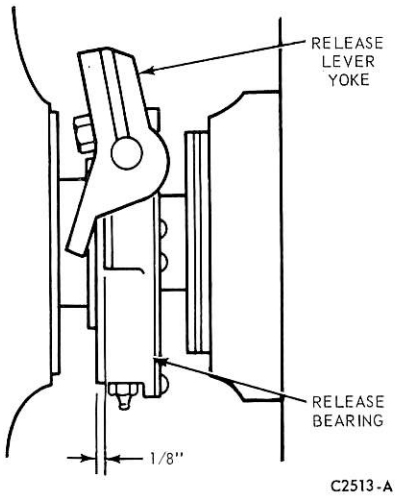

FIG. 2 Adjustment—Spicer-Type Clutch

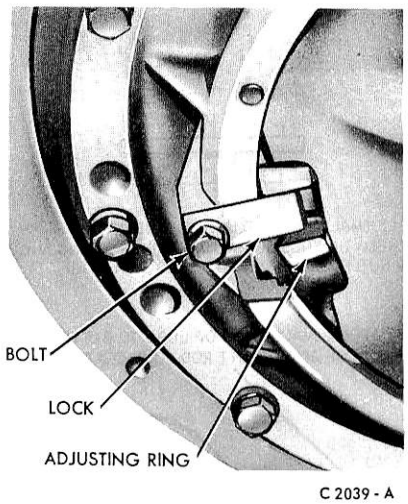

FIG. 3 Internal Adjustment — Spicer-Type Clutch

REMOVAL AND INSTALLATION

SINGLE DISC TYPE CLUTCH

STANDARD DISC (FIGS. 6 AND 7)

Removal

1. Disconnect the release lever retracting spring and push rod assembly at the lever.
2. Remove the slave cylinder attaching bolts on vehicles so equipped.
3. Refer to the appropriate transmission Part for instructions and remove the transmission from the vehicle.
4. If the clutch housing is not provided with a dust cover, remove the starting motor.

Remove the flywheel housing attaching bolts and remove the housing.

5. If the flywheel housing is provided with a dust cover, remove it from the housing. Remove the release lever and bearing from the clutch housing.
6. Mark the pressure plate and cover assembly and the flywheel, so that the parts may be installed in the same relative position.
7. Loosen the pressure plate and cover attaching bolts evenly until the pressure plate springs are expanded, and remove the bolts.
8. Remove the pressure plate and cover assembly and the clutch disc from the flywheel or through the opening in the bottom of the clutch housing.

Remove the pilot bearing only for replacement.

Installation

1. Position the disc on the flywheel so that the pilot tool can enter the clutch pilot bearing and align the clutch disc, Tool T64T-7550-A.
2. When installing the original pressure plate and cover assembly, align the assembly and flywheel according to the marks made during the removal operations. Position the pressure plate and cover assembly on the flywheel, align the pressure plate and disc, and install the retaining bolts that fasten the assembly to the flywheel. Torque the bolts to specification, and remove the clutch disc pilot tool.
3. With the clutch fully released, apply a light film of lithium-base grease (C1AZ-19590-B) on the sides of the driving lugs as shown in Fig. 4.
4. Position the clutch release bearing and the bearing hub on the release lever. Install the release lever on the trunnion in the flywheel housing. Apply a light film of lithium-base grease (C1AZ-19590-B) to the release lever fingers and to the lever trunnion or fulcrum. Fill the annular groove of the release bearing hub with grease.
5. If the flywheel housing has been removed, position it against the engine rear cover plate and install the attaching bolts. Torque the bolts to specification.
6. Check the flywheel housing alignment and adjust the housing as detailed in part 16-01.
7. Install the starter motor. Install the transmission assembly on the clutch housing. Torque the bolts to specification.
8. Apply a light film f lithium base grease the clutch housing. Torque the bolts to specification.
8. Install the slave cylinder on trucks so equipped and torque the bolts to specification.
9. Adjust the release lever push rod assembly. Connect the release lever retracting spring.
10. Install the clutch housing dust cover if so equipped.

14-INCH SINGLE DISC

Removal

1. Disconnect the clutch pedal assist spring. If necessary, remove the left-hand muffler inlet pipe.
2. Disconnect the release lever retracting spring. Remove the bolts that attach the slave cylinder to the clutch housing and remove the slave cylinder.
3. Refer to the appropriate transmission Part for instructions and remove the transmission. **Pull the transmission straight out until it is clear of the clutch assembly. An unsupported, partially removed or installed transmission can spring or distort the clutch disc.**
4. Insert two 3/4 inch wood blocks between the release bearing housing and the rear surface of the pressure plate assembly.
5. Remove the clutch to flywheel bolts and remove the flywheel ring and

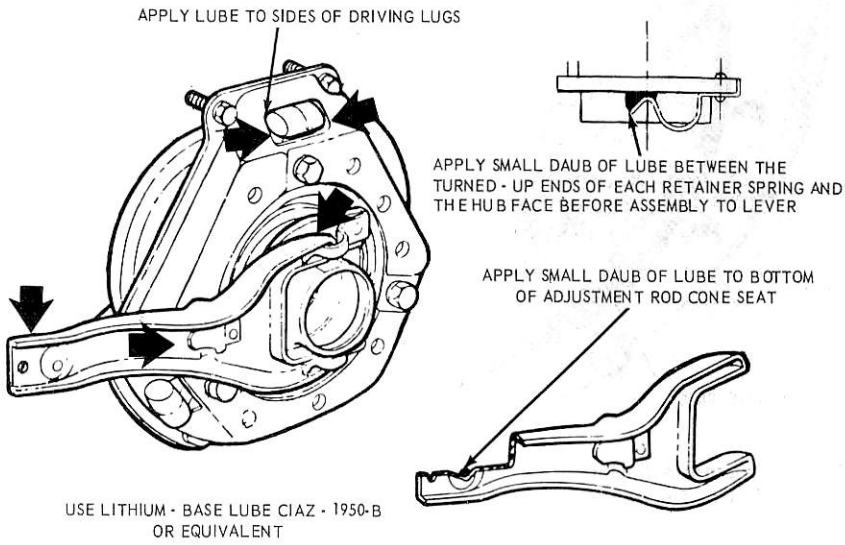

FIG. 4 Clutch Lubrication Points

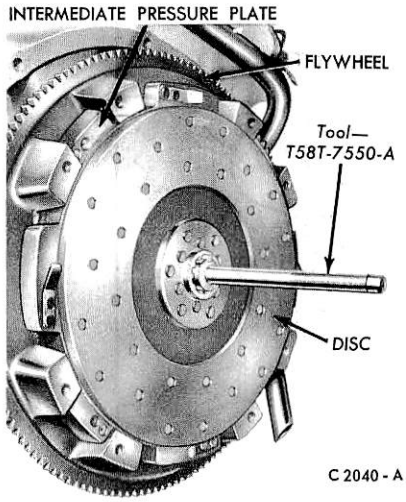

FIG. 5 Installing Discs—13-Inch Multiple Disc Clutch

pressure plate assembly. Remove the clutch disc.

Installation

1. Place the clutch disc and pressure plate assembly in position on the flywheel and start the bos. Be sure the long hub of the clutch disc is facing the rear (toward the transmission). Then, insert the clutch disc aligning Tool T61T-7550-A through the disc and into the pilot bushing. Tighten the pressure plate bolts evenly and torque them to specifications.
2. Remove the two wood blocks from the release bearing and pressure plate. Remove the aligning tool.
3. Install the transmission and drive shaft.
4. Install the slave cylinder to the clutch housing. Connect the release lever retracting spring and the left hand muffler inlet pipe if it was removed.
5. Connect the clutch pedal assist spring. Check the internal clutch adjustment, the linkage adjustment, and make necessary corrections.

MULTIPLE DISC TYPE CLUTCH

13-INCH DOUBLE DISC (FIG. 8)

Removal

1. Disconnect the clutch pedal retracting spring. If necessary, remove the muffler left inlet pipe.
2. Remove the bolts that attach the slave cylinder to the clutch housing.
3. Disconnect the slave cylinder push rod at the release lever, and disconnect the release lever retracting spring.
4. Refer to the pertinent transmission Part for instructions and remove the transmission assembly from the clutch housing. Remove the dust cover from the clutch housing.
5. Remove the clutch release bearing and hub from the release lever.
6. Mark the pressure plate and cover assembly and the flywheel, so that the parts may be installed in the same relative position.
7. Loosen the pressure plate and cover attaching bolts evenly until the pressure plate springs are expanded, and remove the bolts.
8. Remove the pressure plate and cover, the discs, and the intermediate pressure plate through the opening in the bottom of the clutch housing. **Remove the pilot bearing only for replacement,** using Tool T58L-101-A.

Installation

1. When installing a new pilot bearing use Tool 7600-G. Position the discs and second pressure plate on the flywheel so that the pilot Tool T58T-7550-A (Fig. 5) can enter the clutch pilot bushing. **When installing the original pressure plate and cover assembly, align the assembly and flywheel according to the marks made during the removal operations. The long end of the clutch disc hub must face the rear (transmission). The front (flywheel) side of the front pressure plate is stamped FLYWHEEL SIDE on one of the lugs (Fig. 6). Position the pressure plates and cover assembly on the flywheel. Align the pressure plate and discs and install the retaining bolts that fasten the assembly to the flywheel. Torque the bolts to specification, and remove the clutch disc pilot tool.**

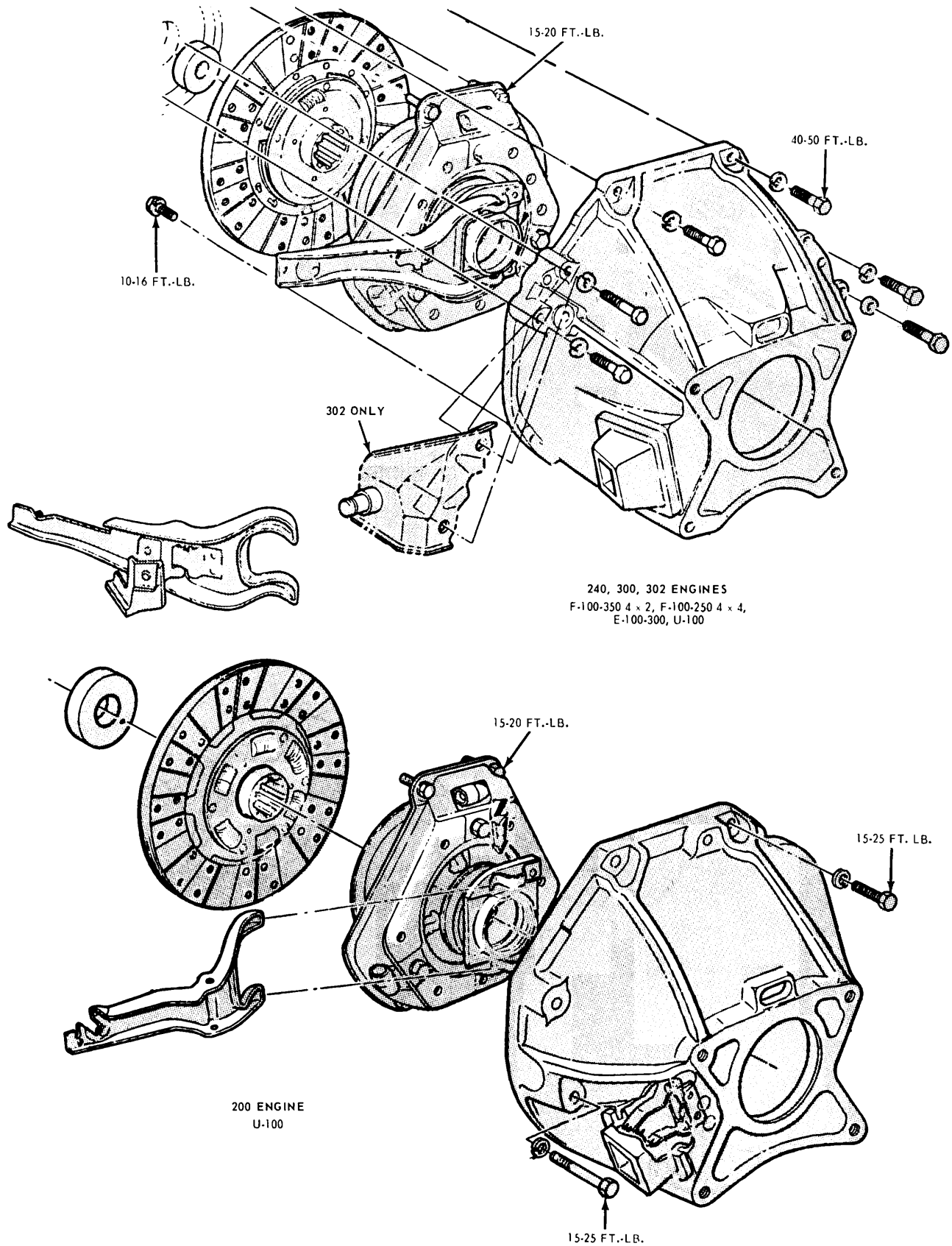

FIG. 6 Clutch Installation One-Piece Flywheel Housing

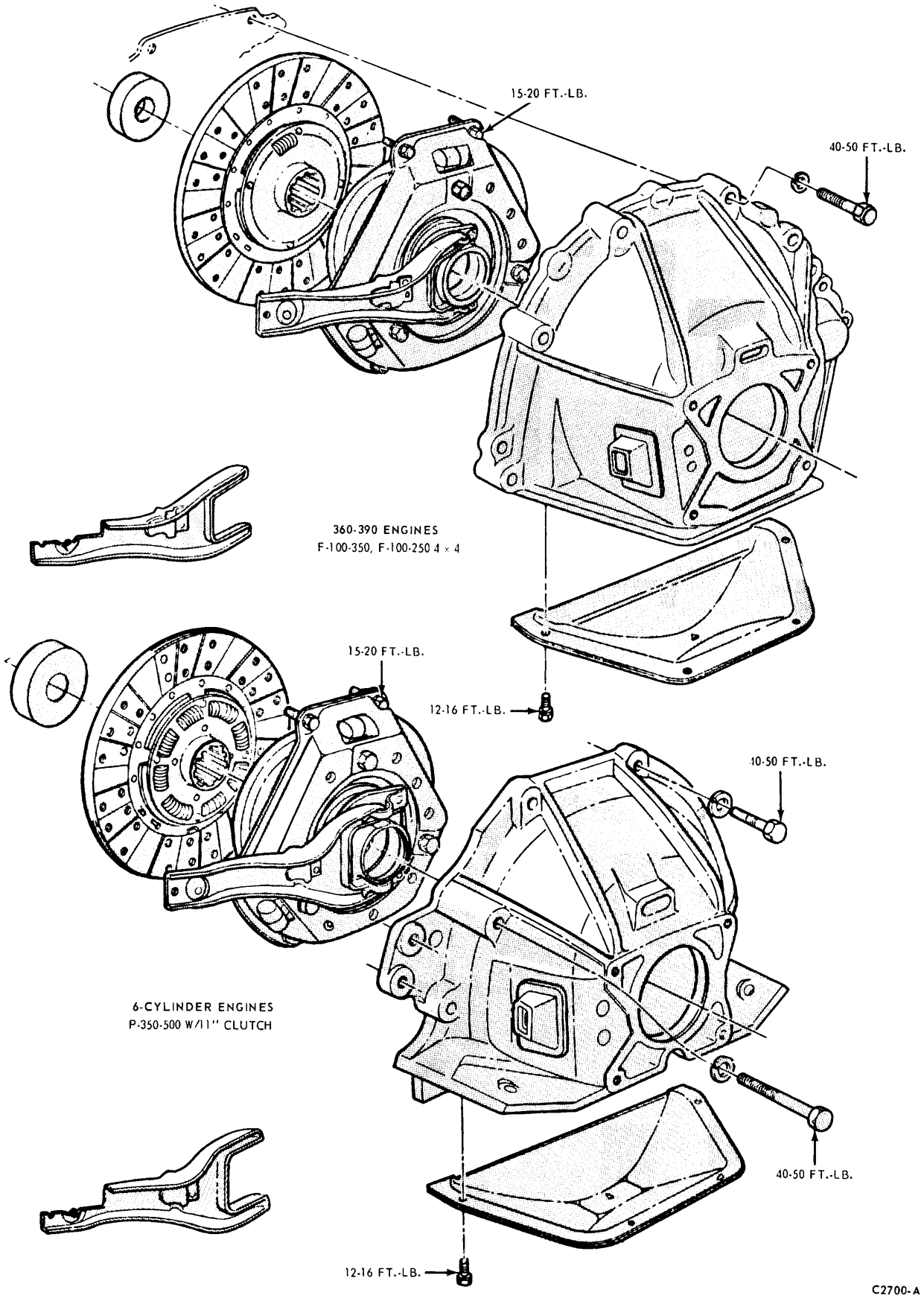

FIG. 7 Clutch Installation 2-Piece Flywheel Housing

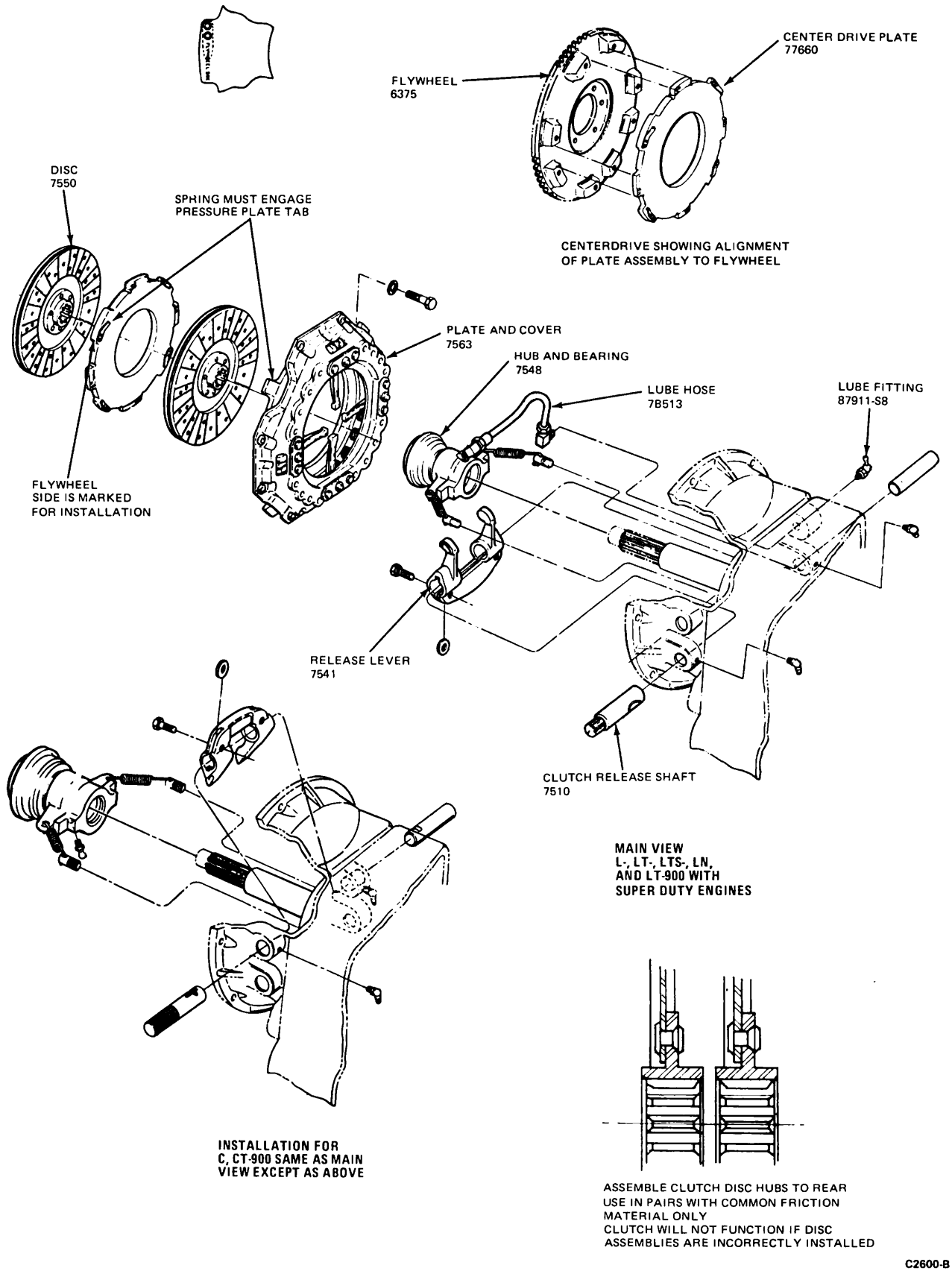

FIG. 8 13-Inch Double-Disc Clutch Installation

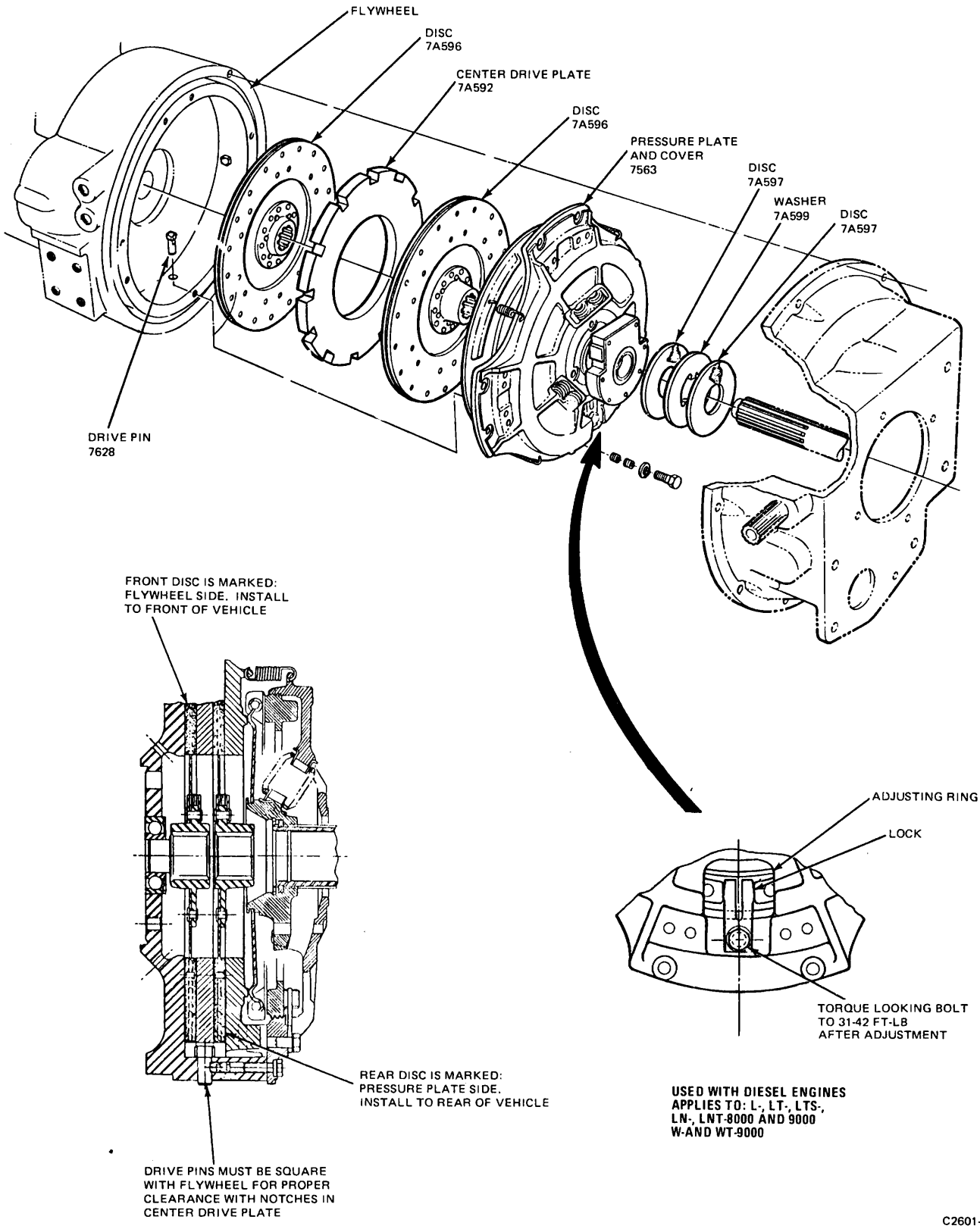

FIG. 9 14-Inch Double-Disc Clutch Installation

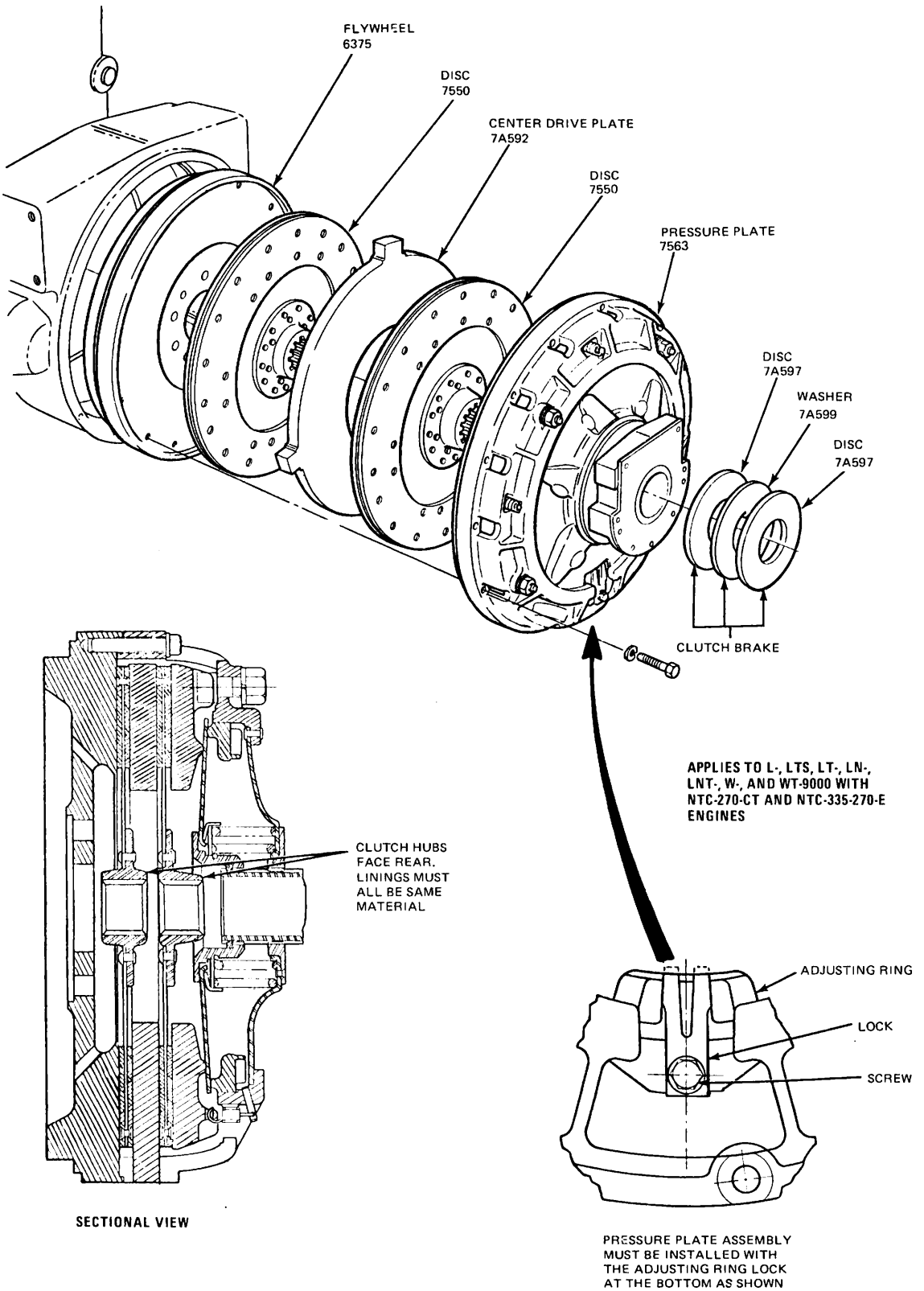

FIG. 10 15 1/2-Inch Double-Disc Clutch Installation

2. Position the clutch release bearing and the bearing hub on he release lever.
3. Install the transmission assembly on the clutch housing and torque the bolts and nuts to specifications.
4. Install the slave cylinder, and torque the bolts to specification.
5. Adjust the slave cylinder push rod. Connect the release lever retracting spring, and (if it was removed) install the muffler left inlet pipe.
6. Lubricate the release bearing through the grease fitting with 1/2 ounce of the specified lubricant.
7. Install the clutch housing dust cover.

14-INCH AND 15 1/2-INCH DOUBLE DISC (FIGS. 9 AND 10)

Removal

1. Disconnect the clutch pedal assist spring. If necessary, remove the left-hand muffler inlet pipe.
2. Disconnect the release lever retracting spring. Remove the bolts that attach the slave cylinder (if so equipped) to the clutch housing and remove the slave cylinder.
3. Refer to the pertinent transmission Part for instructions and remove the transmission. **Pull the transmission straight out until it is clear of the clutch assembly. An unsupported, partially removed or installed transmission can spring or distort the clutch disc.**
4. Insert two 3/4 inch wood blocks between the release bearing housing and the rear surface of the pressure plate assembly.
5. Remove the clutch to flywheel bolts and remove the flywheel ring and pressure plate assembly.
6. Remove the rear disc, the intermediate plate and the front disc from the engine (Figs. 7 and 8). If necessary, remove the clutch drive pin retaining set screws and remove the four intermediate pressure plate drive pins.

Installation

1. Install the intermediate pressure plate drive pins in the flywheel if they were previously removed (Fig. 8). Make sure they are a press fit. Oversize pins are available for service. Install the intermediate pressure plate and check the clearance between the pin heads and the slots in the pressure plate (Fig. 11). A clearance of 0.006 to 0.010 inch must exist, measured on the same side of all pins. Replace the pins or plate if necessary. Remove the intermediate plate, and using an adjustable square to maintain pin head alignment, install the pin set screws.
2. Place the front driven disc (shorter hub than rear disc) in the flywheel, with the hub facing the rear. Set the intermediate pressure plate in the flywheel, aligning the slots with the pins (Fig. 11). The side marked **FRONT** should face the engine. Position the rear driven disc in the flywheel with the long end of the splines hub toward the rear. Then, insert the clutch disc spline aligning Tool T61T-7550-A through the two discs and into the pilot bushing. Place the main (rear) pressure plate and flywheel ring assembly in position and start the bolts. Tighten the pressure plate bolts evenly and torque them to specification.

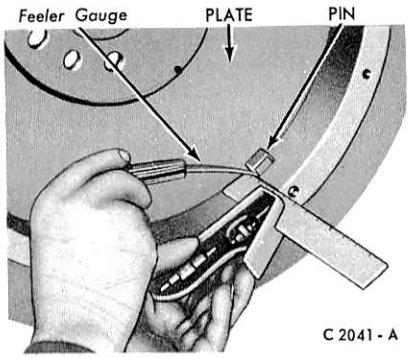

FIG. 11 Intermediate Plate Slot Clearance—Double-Disc Clutch

3. Remove the two wood blocks from the release bearing and pressure plate. Remove the spline aligning tool.
4. Install the transmission and drive shaft.
5. If the vehicle is equipped with a slave cylinder, install the slave cylinder to the clutch housing. Connect the release lever retracting spring and the left-hand muffler inlet pipe if it was removed.
6. Connect the clutch pedal assist spring. Check the internal clutch adjustment, the linkage adjustment, and make necessary corrections.

PART 16-03 Mechanical Linkage

COMPONENT INDEX Applies To Models As Indicated	All Models	Bronco	Econoline	F-100-350	F-, B-500-750	F-, B-6000-7000	L-Series	W-Series
EQUALIZER BAR								
Installation	03-16							
Removal	03-16							
LINKAGE ADJUSTMENT		03-01	03-01	03-01	03-06	03-06	03-04	03-04
PEDAL ADJUSTMENT		03-01	03-01	N.A.	03-06	03-06	03-04	03-04
PEDAL AND/OR BUSHING								
Installation		03-16	03-16	03-16	03-06	03-06	03-07	03-15
Removal		03-16	03-16	03-16	03-06	03-06	03-07	03-15
SPECIFICATIONS	03-18							

ADJUSTMENTS

CLUTCH PEDAL

ECONOLINE

1. To check and adjust the pedal total travel, measure and note the distance from the floor pan to the center of the pedal. If the pedal height is less than 7 1/2 inches or more than 7 3/4 inches, loosen the nut securing the clutch pedal eccentric bumper and rotate the bumper until the travel is within specifications (Fig. 1). Torque the nut to 10-17 ft-lbs.
2. To check and adjust the pedal free travel, slowly apply the clutch pedal until the clutch fingers contact the clutch release bearing. The distance the clutch pedal moves is the free travel dimension. The free travel should be 3/4-1 1/2 inches. If not within these limits, loosen the lock nut at the bullet on the clutch release rod (Fig. 2). Adjust the bullet until free travel is correct. Tighten the lock nut.

BRONCO

1. Measure the total travel of the pedal (Fig. 3). If the total travel is less than 6 3/4 inches or more than 7 inches, move the clutch pedal bumper and bracket up or down until the travel is within these limits. Torque the lock nut to 10-17 ft-lbs.
2. To check and adjust the pedal free travel, slowly apply the clutch pedal until the clutch fingers contact the clutch release bearing. The distance the clutch pedal moves is the free travel dimension. The free travel should be 3/4-1 1/2 inches. If not within these limits disconnect the retracting spring and loosen the nut at the bullet on the clutch release rod. Adjust the bullet until free travel is correct. Tighten the lock nut.

F-100-350 SERIES

1. Refer to Fig. 4 for adjustment points. Pedal total travel is fixed in this Series and is not adjustable.
2. Measure the clutch pedal free travel using a steel tape as shown in Fig. 6. Measure the distance from the clutch pedal pad to the steering wheel rim. Depress the pedal slowly until the free travel between the release bearing assembly and the pressure plate assembly is taken up. Note this measurement. The difference between the two measurements is the free travel.
3. If the free travel measurement is less than 3/4 inches, the clutch linkage must be adjusted.
4. Loosen the two jam nuts on the release rod assembly (Fig. 8) and back off both nuts several turns.
5. Loosen or tighten the first jam nut against the release rod extension (bullet) until a free-travel measurement indicates a 3/4 to 1 1/2 inch movement. A free travel measurement close to the 1 1/2 inch measurement is more desirable.
6. With the recommended free travel obtained, and holding the first jam nut, position and securely tighten the second jam nut against the first jam nut.
7. Re-check the pedal free travel.

Pedal Reserve

1. Start the engine and with the clutch pedal in the engaged position, move the transmission shift lever into the reverse position until a slight gear raking noise is noted. Depress the clutch pedal gradually until the raking noise is gone and the shift lever slips into the reverse position without gear clash. Noting this dimension, continue to depress the clutch pedal to its full travel and note this dimension. The difference is the pedal reserve measurement.

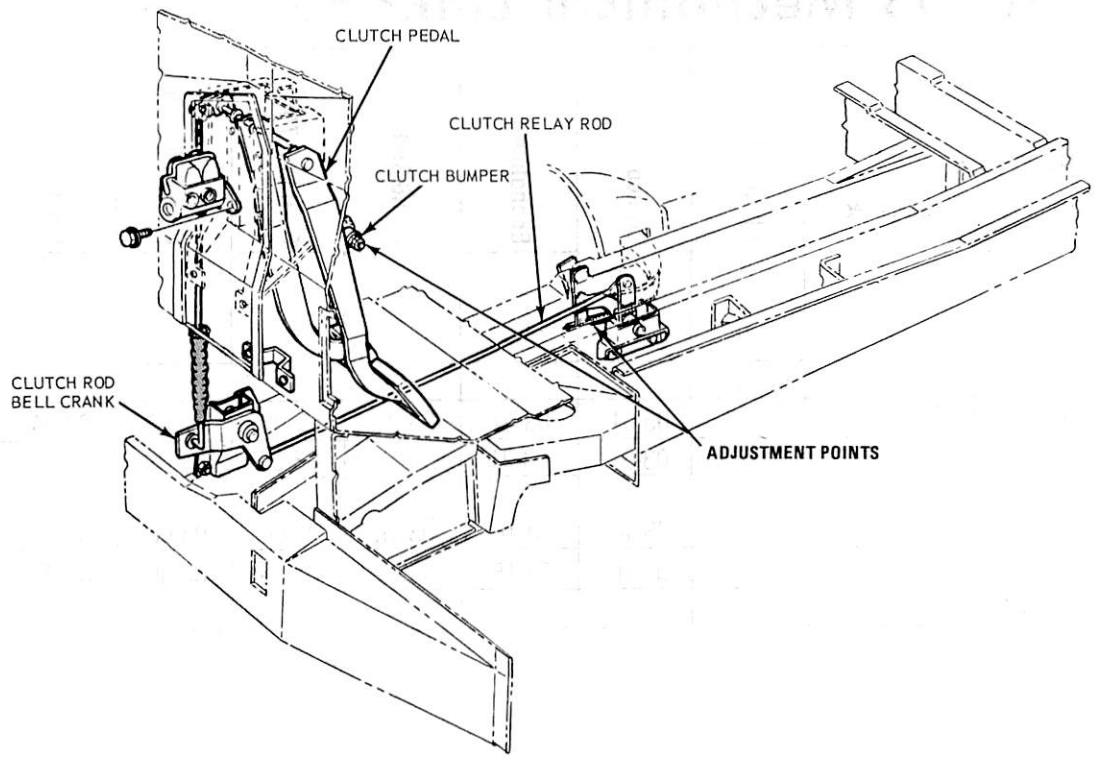

FIG. 1 Clutch Mounting and Linkage—Econoline

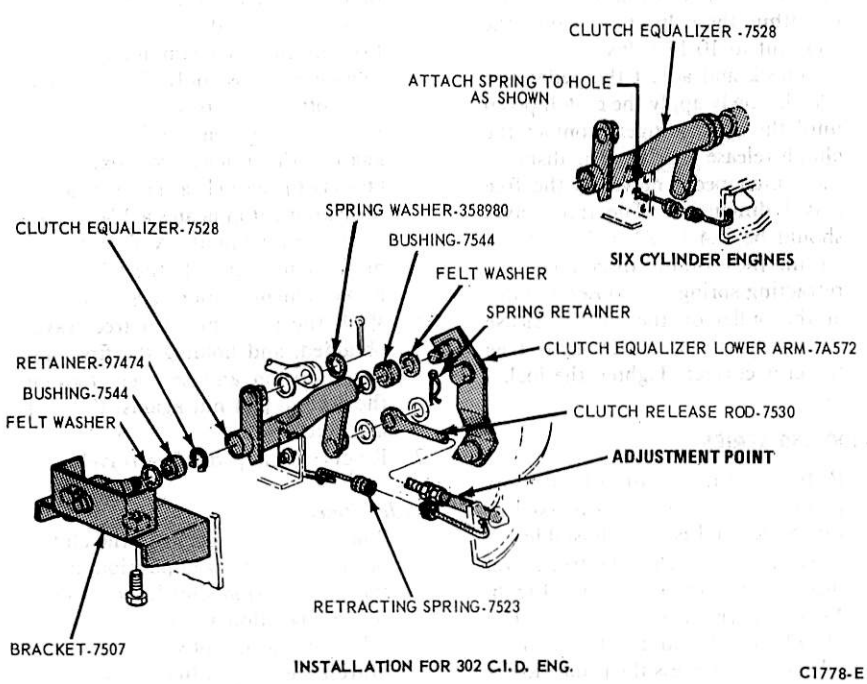

FIG. 2 Clutch Equalizer Shaft—Econoline

This reserve motion will vary with the engine used.

Spring Installation

1. Hook the short (reverse hook) end of the spring to the upper hole in the frame crossmember. Hook the long end hook into the release lever, on F-100-F-250 4 x 4 hook spring to frame bracket.

F-AND B-500 THROUGH 750 AND F-AND B-6000-7000

1. Adjust the clutch pedal stop to set total pedal travel within specification (Figs. 7 and 9). Torque the stop nut to specification.
2. On gas-engine models, adjust the clutch pedal free travel to specification by backing off the jam nut and adjusting the spherical nut on the release push rod (Fig. 9). There should be 1/4 inch clearance between the spherical nut and the release lever. Make this adjustment with the retracting spring in place.
3. Tighten the jam nut.
4. On diesel-engine models, adjust the

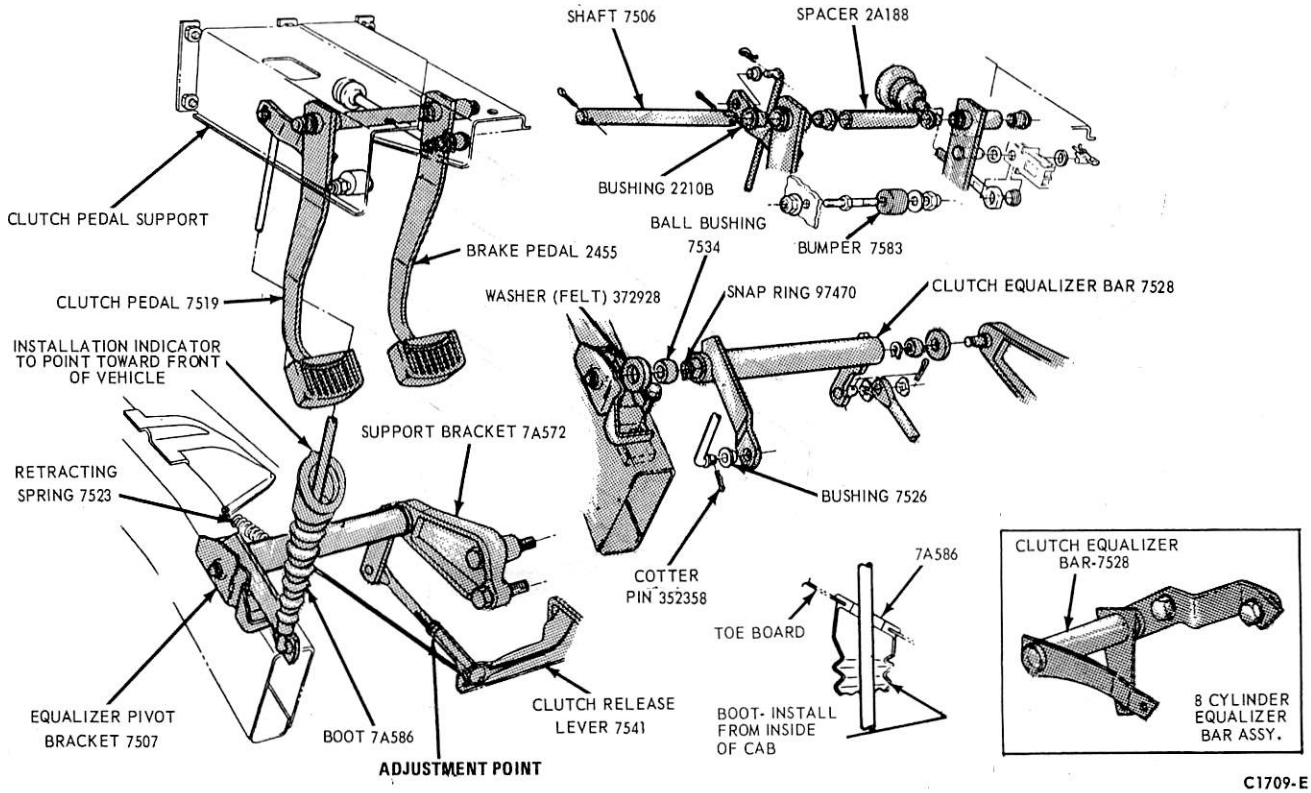

FIG. 3 Clutch Linkage—Bronco

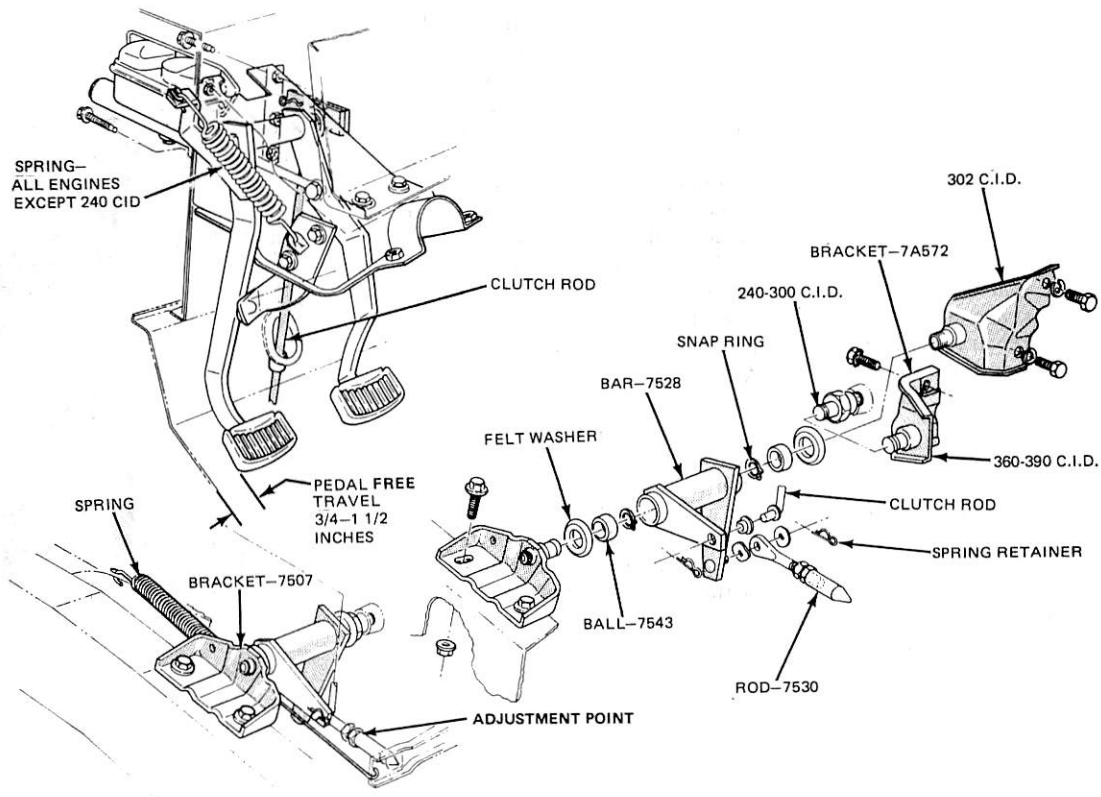

FIG. 4 F-100-350 Series Clutch

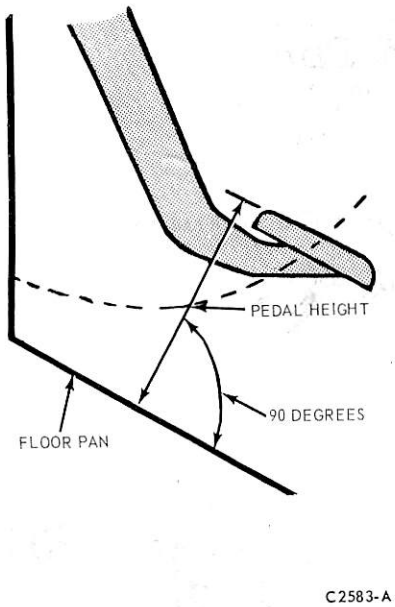

FIG. 5 Measuring Pedal Height

clearance between the sleeve and lever as shown in fig. 9. Clearance should be 1/8 inch.

5. Tighten the jam nut.

L-SERIES

A common pedal is used on all L-Series trucks (Fig. 10). Refer to Fig. 10 for instructions on adjusting pedal total travel and dimension locations for installation and free pedal measurements.

Refer to the appropriate illustration for linkage and clutch free pedal adjustments. Please note that it is not necessary to set the total clutch linkage each time the clutch is adjusted for pedal free travel. Also note that double disc spicer-type clutches are adjusted **internally** for pedal free travel. **This procedure must be used on these clutches to prevent premature clutch failure.**

W-SERIES

1. Adjust the clutch pedal stop to permit total pedal travel of 10 15/32 to 10 31/32 inches (Fig. 18). Torque the bracket attaching bolts to specifications.
2. Adjust the clutch pedal over-center assist spring by means of the spherical locking nut to provide a spring length of 7 3/16-7 5/16 inches for 500 pound clutch and 6 15/16-7 1/16 inches for 420 pound clutch. This distance should be measured inside of the spring eye ends (Fig. 19). When making the spring adjustment, hold the spring retainer from rotating and make certain the assist spring and anchor are aligned at right angles as shown in Fig. 18. When adjusting the assist spring anchor, use a deep socket wrench to avoid damaging the plastic-insert locknut.
3. Adjust the vertical tension rod turnbuckle so that the lever (Fig. 18) is perpendicular to the top of the frame. This adjustment to be made with the cab in the locked position and a 1/4 inch diameter aligning pin installed in the lever. After the adjustment, position the thin section of the turnbuckle toward the body sheet metal so as to provide maximum clearance between the sheet metal and radiator side support. Do not remove the aligning pin at this time.

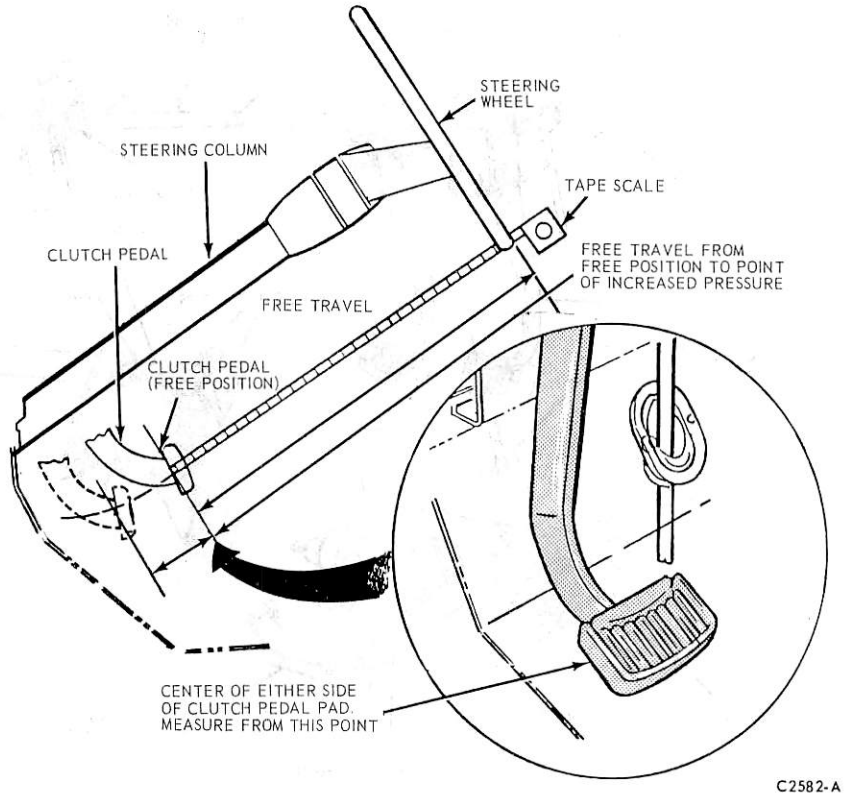

FIG. 6 Measuring Free Travel

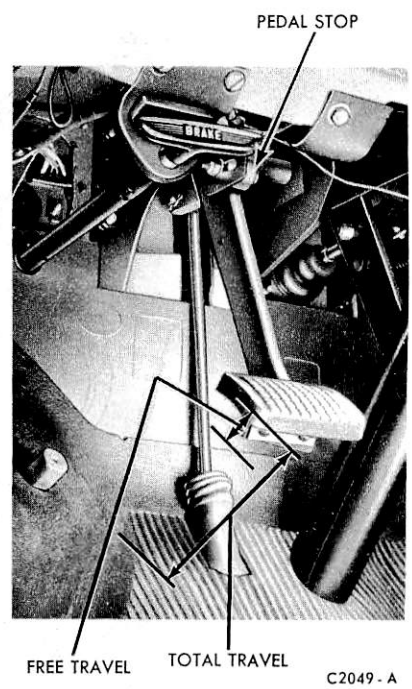

FIG. 7 Clutch Pedal Travel

4. With another 1/4 inch diameter aligning pin inserted through the frame bracket and outer equalizer lever, check the inner equalizer lever to be sure it is perpendicular to the top of the frame. If the lever is not perpendicular, adjust the rod length as required. Remove both aligning pins.
5. Position the linkage return spring clip to the dimension shown in Fig. 18.
6. Disconnect the equalizer rod at the clutch housing cross-shaft lever.
7. While holding the clutch housing cross-shaft lever in the rearward position, adjust the length of the equalizer rod so that the hole in the clevis and the hole in the cross-shaft lever are aligned. Then, back-off the clevis 7 1/2 turns and rotate the cross-shaft lever forward. Connect the equalizer rod at the cross-shaft lever and tighten the locknuts at all the clevis connections. The resulting clutch pedal free travel will be approximately 1 3/8-1 1/2 inches, corresponding to a 1/2 inch free bearing lash at the clutch bearing hub.
8. With linkage correctly set, make all further service adjustments for clutch facing wear by internally adjusting the clutch to the specified 1/2 inch clearance. This action should automatically restore the specified pedal free travel.

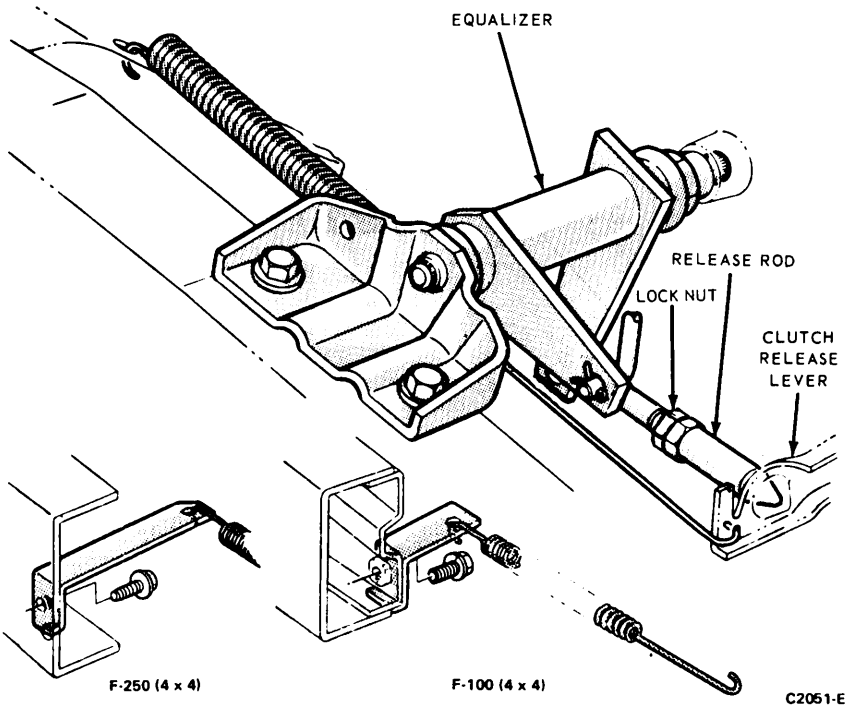

FIG. 8 Clutch Pedal Free Travel Adjustment—F-100-350 Series

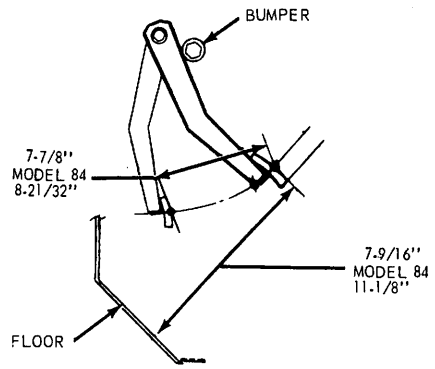

PEDAL SETTINGS

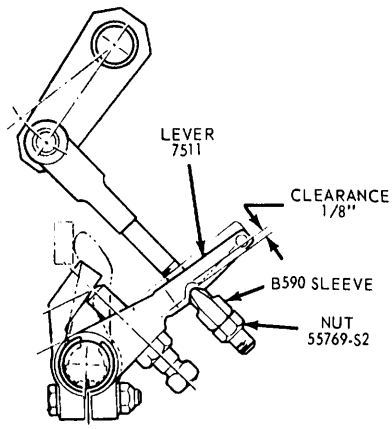

ADJUSTMENT POINT – DIESEL ENGINE
F- AND B-6000–7000

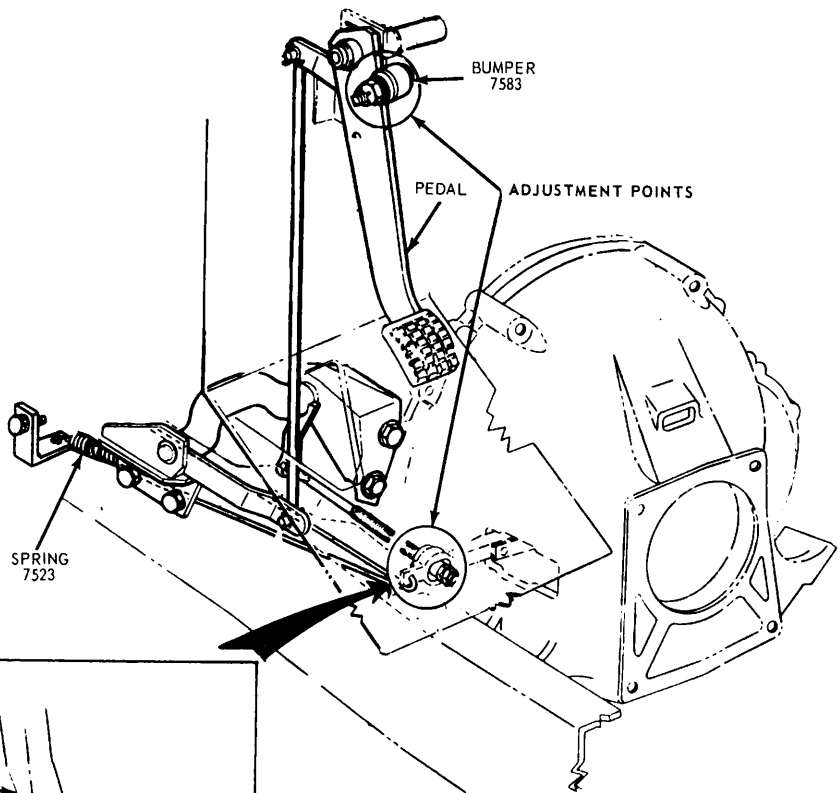

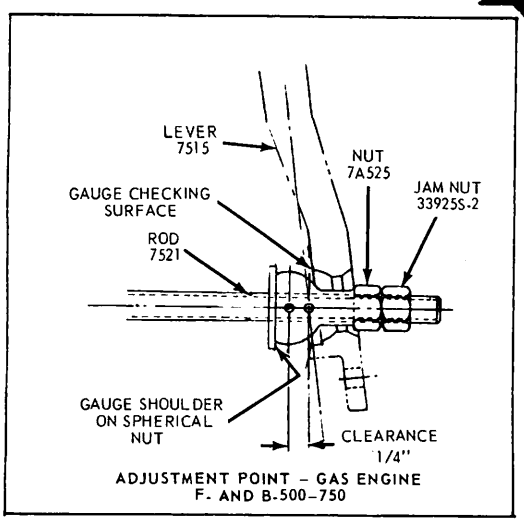

ADJUSTMENT POINT – GAS ENGINE
F- AND B-500–750

C2605-A

FIG. 9 Clutch Adjustments—F-and B-500 through 750 and F-and B-6000-7000

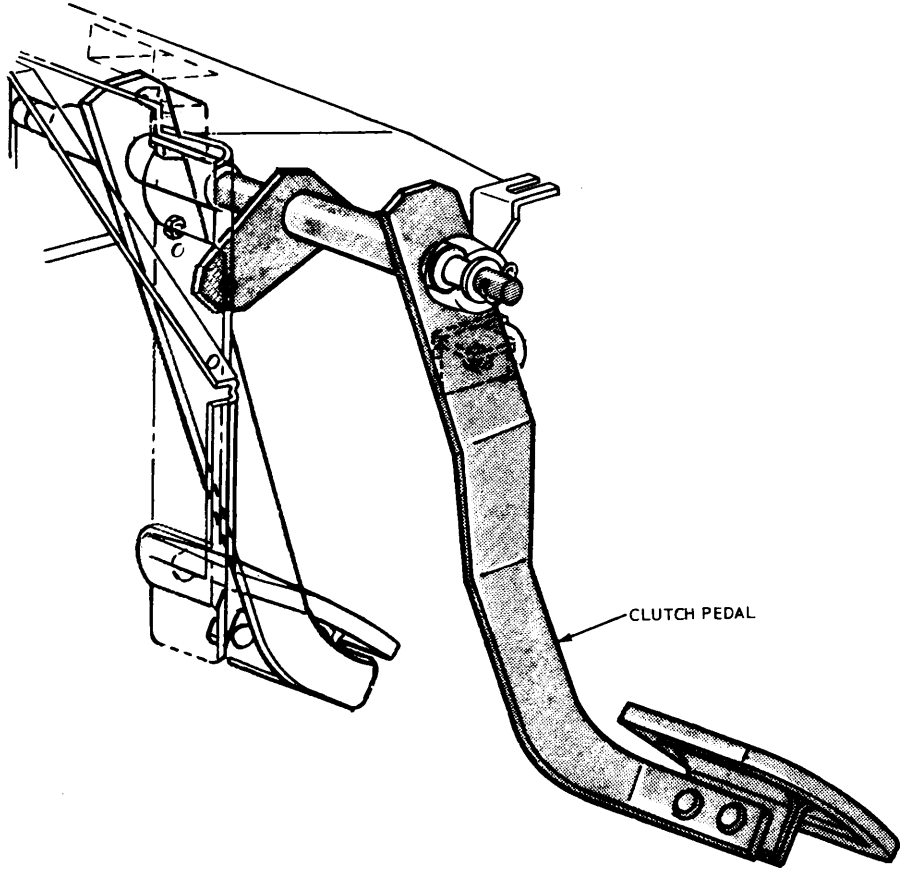

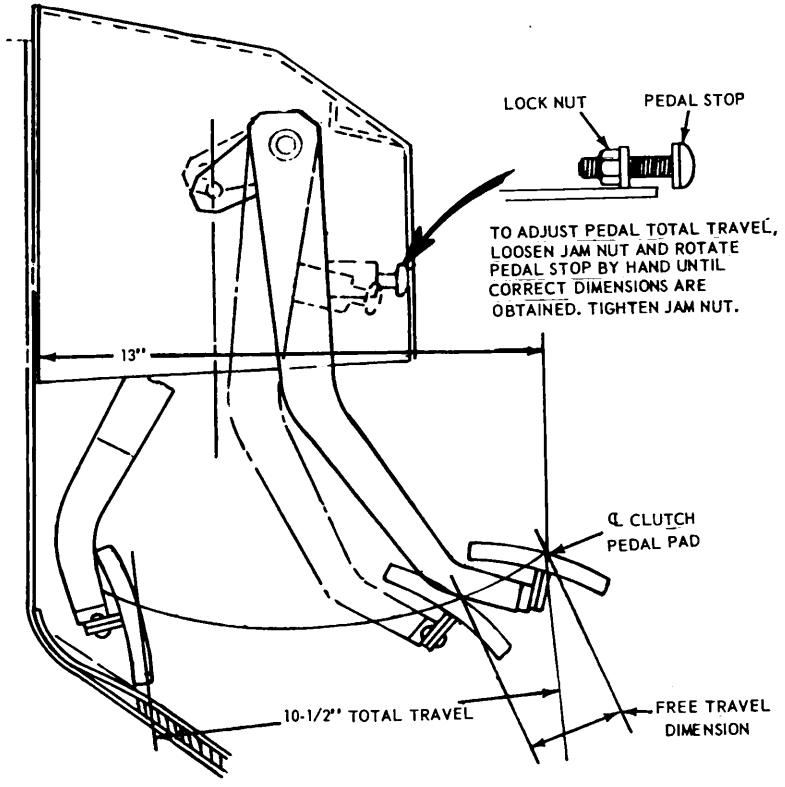

APPLIES TO:

LN-500	L-800
LN-600	L-8000
LN-6000	L-900
LN-700	L-9000
LN-7000	LT-800
LN-750	LT-8000
LN-800	LT-900
LN-900	LT-9000
LN-9000	LTS-800
LNT-800	LTS-8000
LNT-8000	LTS-900
LNT-900	LTS-9000
LNT-9000	

C2598-A

FIG. 10 Clutch Pedal—All L-Series

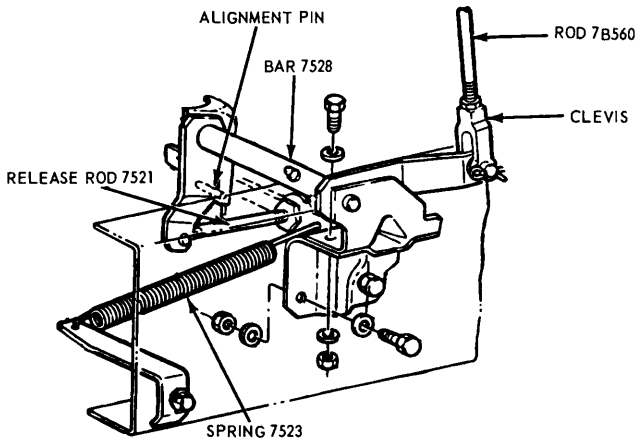

LN-, LNT-800 WITH MODELS 280, 542, OR 5000 TRANSMISSIONS

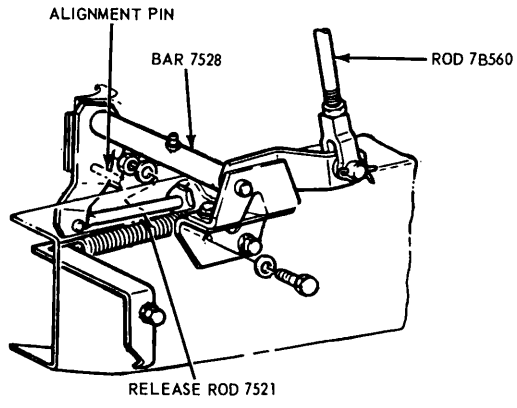

LN-600-750 WITH MODELS 280, 542, T-19, 435 AND 5000 TRANSMISSIONS

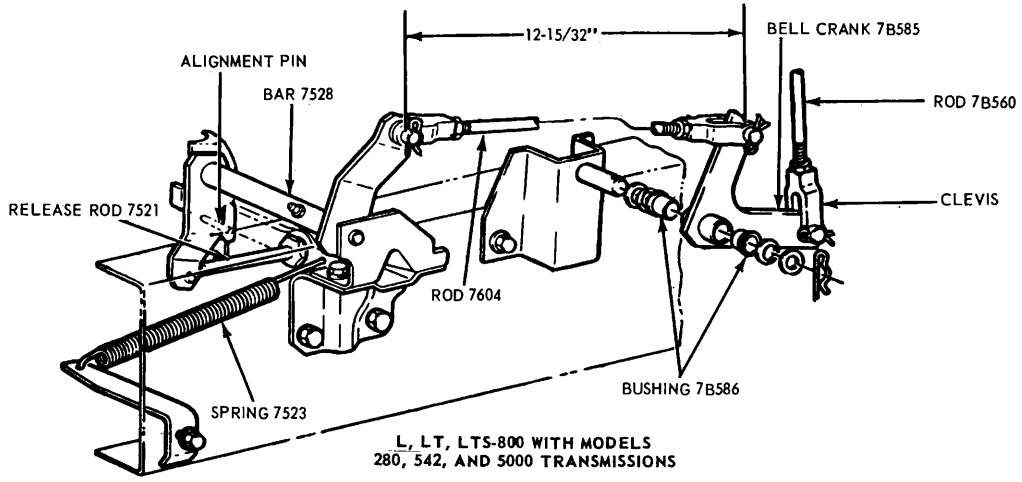

L, LT, LTS-800 WITH MODELS 280, 542, AND 5000 TRANSMISSIONS

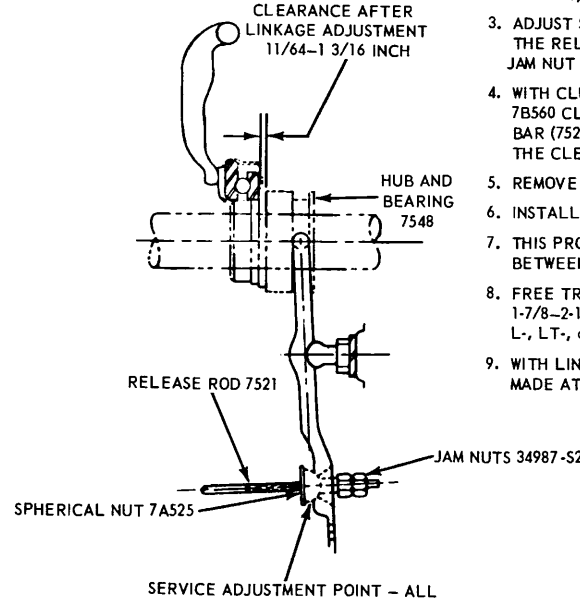

1. ADJUST CLUTCH PEDAL TOTAL TRAVEL. DISCONNECT CLUTCH RETRACTING SPRING AND CLUTCH ROD 7B560.
2. INSTALL 0.25 GAUGE PIN AS SHOWN. ON L, LT, AND LTS-800 MODELS, ADJUST ROD 7604 TO DIMENSION SHOWN.
3. ADJUST SPHERICAL NUT 7A525 TO REMOVE ALL LASH BETWEEN THE RELEASE BEARING AND THE CLUTCH FINGERS. TIGHTEN JAM NUT 34987-S2.
4. WITH CLUTCH PEDAL HELD AGAINST ITS STOP, ADJUST CLUTCH ROD 7B560 CLEVIS UNTIL THE CLEVIS PIN FITS FREELY THROUGH THE BAR (7528) OR BELLCRANK (7B585). LENGTHEN THE ROD BY TURNING THE CLEVIS 5 FULL TURNS.
5. REMOVE THE GAUGE PIN AND INSTALL THE CLUTCH ROD 7B560.
6. INSTALL THE RETRACTING SPRING.
7. THIS PROCEDURE SHOULD GIVE A CLEARANCE OF 11/64– 3/16 INCH BETWEEN THE RELEASE BEARING AND THE CLUTCH FINGERS.
8. FREE TRAVEL AT CENTER OF CLUTCH PEDAL PAD SHOULD BE 1-7/8–2-1/8 INCH FOR LN-750 AND 2-1/4–2-1/2 INCH FOR LN-, LNT-, L-, LT-, and LTS-800 MODELS.
9. WITH LINKAGE CORRECTLY SET, ALL SERVICE ADJUSTMENTS ARE MADE AT THE CLUTCH RELEASE LEVER.

FIG. 11 Clutch and Linkage—LN-500 to 800; L-, LT-, LNT-, LTS-800 with Gas Engines

C 2592-A

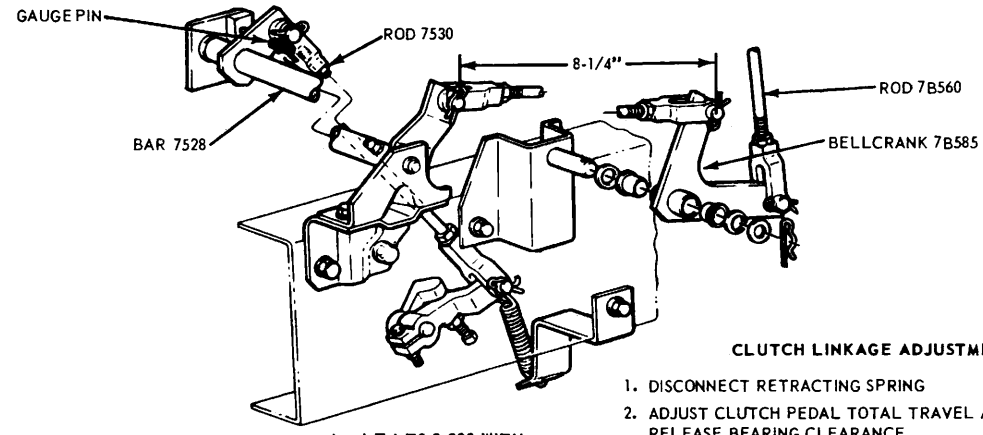

L-, LT-LTS-8 900 WITH GAS ENGINE AND RT-610

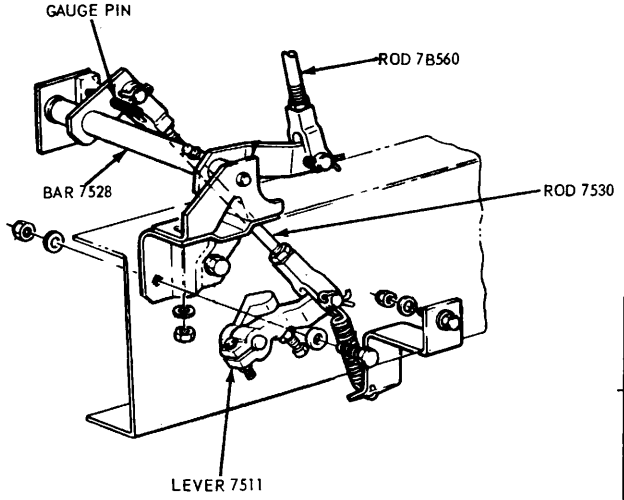

LN, LNT-900 WITH GAS ENGINE AND RT-610 TRANSMISSION

CLUTCH LINKAGE ADJUSTMENT

1. DISCONNECT RETRACTING SPRING
2. ADJUST CLUTCH PEDAL TOTAL TRAVEL AND CLUTCH RELEASE BEARING CLEARANCE
3. DISCONNECT CLUTCH ROD 7B560 AT EQUALIZER BAR 7528 AND INSTALL 0.25 INCH GAUGE PIN AS SHOWN
4. ADJUST ROD 7530 TO SECURE ZERO RELEASE BEARING LASH WHERE APPLICABLE. BE SURE BAR-TO-BELL CRANK ROD DIMENSION IS AS SHOWN
5. WITH THE PEDAL HELD AGAINST ITS STOP, ADJUST CLUTCH ROD 7B560 UNTIL THE CLEVIS PIN FITS FREELY IN BAR 7528
6. REMOVE THE ALIGNMENT PIN.
7. LENGTHEN CLUTCH ROD 7B560 5 TURNS AND CONNECT TO BAR 7528. CONNECT RETRACTING SPRING.
8. CHECK RELEASE BEARING CLEARANCE, WHICH SHOULD BE AS SHOWN. IT IS NOT NECESSARY TO ADJUST CLUTCH LINKAGE EACH TIME THE PEDAL FREE TRAVEL IS ADJUSTED. MAINTAIN PEDAL FREE TRAVEL BY ADJUSTING AT THE POINT SHOWN.

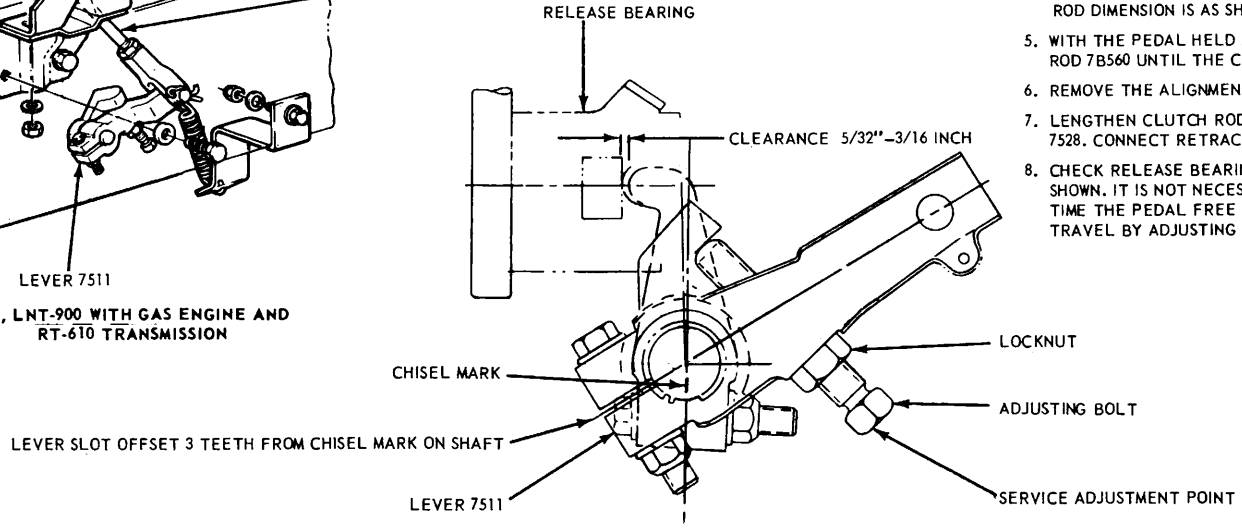

PEDAL FREE TRAVEL 1-7/8-2-1/8 INCH

FIG. 12 Clutch and Linkage—L-, LN-, LT-, LNT-, LTS-900 with Gas Engine and Model RT-610 Transmission

C 2594-A

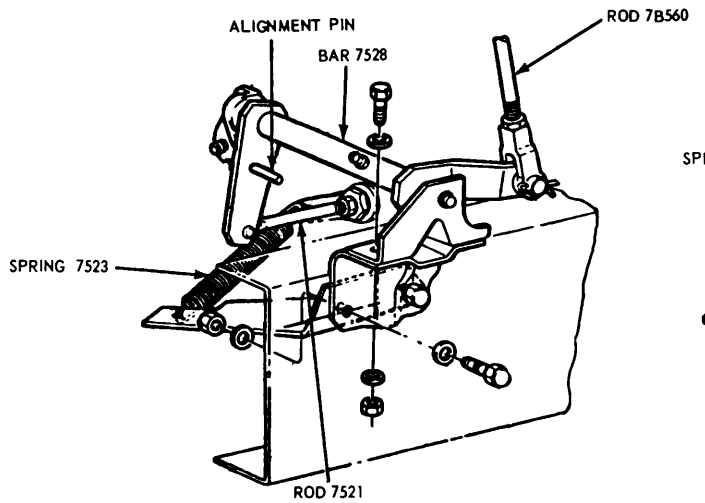

LN- LNT-900 WITH SUPER DUTY ENGINE AND 380, 5000-6000 SERIES TRANSMISSIONS

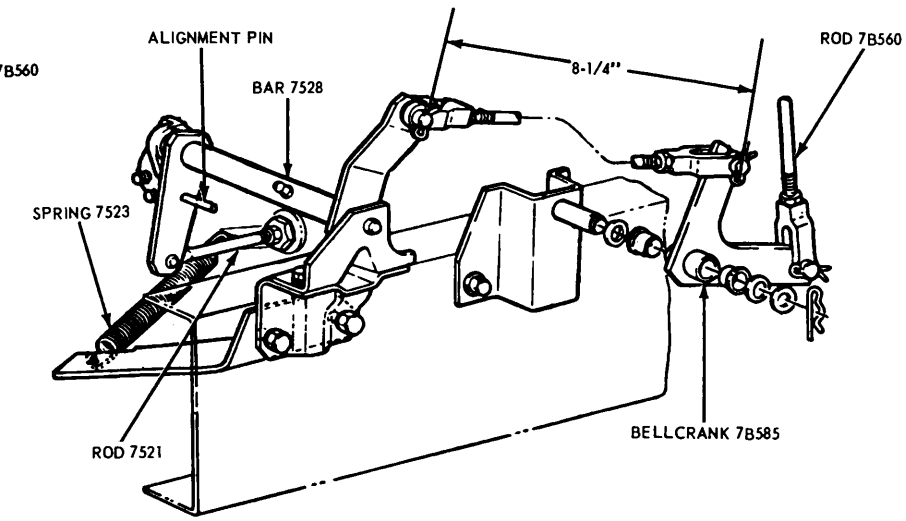

L-, LT- AND LTS-900 WITH SUPER DUTY ENGINE AND 380, 5000-6000 SERIES TRANSMISSION

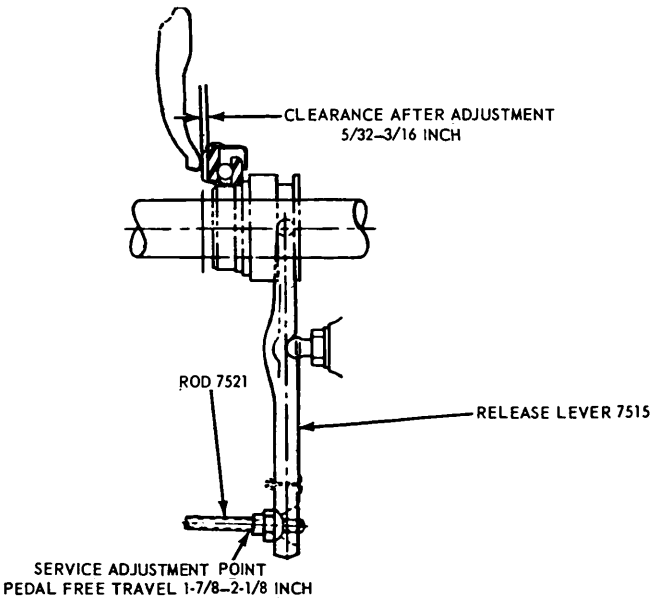

CLUTCH LINKAGE ADJUSTMENT

1. DISCONNECT RETRACTING SPRING 7523
2. ADJUST CLUTCH PEDAL TOTAL TRAVEL AND RELEASE BEARING CLEARANCE.
3. DISCONNECT CLUTCH ROD 7B560 AT EQUALIZER BAR 7528 AND INSTALL 0.25 INCH GAUGE PIN.
4. ADJUST ROD 7521 TO SECURE ZERO RELEASE BEARING LASH. BE SURE THAT BAR-TO-BELLCRANK ROD DIMENSION IS AS SHOWN (WHERE APPLICABLE).
5. WITH THE PEDAL HELD AGAINST ITS STOP, ADJUST CLUTCH ROD 7B560 UNTIL THE CLEVIS PIN FITSFREELY IN EQUALIZER BAR 7528
6. REMOVE THE ALIGNMENT PIN.
7. LENGTHEN CLUTCH ROD 7B560 5 TURNS AND CONNECT TO EQUALIZER BAR 7528, CONNECT THE RETRACTING SPRING.
8. CHECK RELEASE BEARING CLEARANCE, WHICH SHOULD BE AS SHOWN. IT IS NOT NECESSARY TO ADJUST CLUTCH LINKAGE EACH TIME PEDAL FREE TRAVEL IS ADJUSTED. MAINTAIN PEDAL FREE TRAVEL BY ADJUSTING AT THE POINT SHOWN.

C-2593-A

FIG. 13 Clutch and Linkage—L-, LN-, LT-, LNT-, LTS-900 with Gas Engine and Models 380, 5000 or 6000 Transmissions

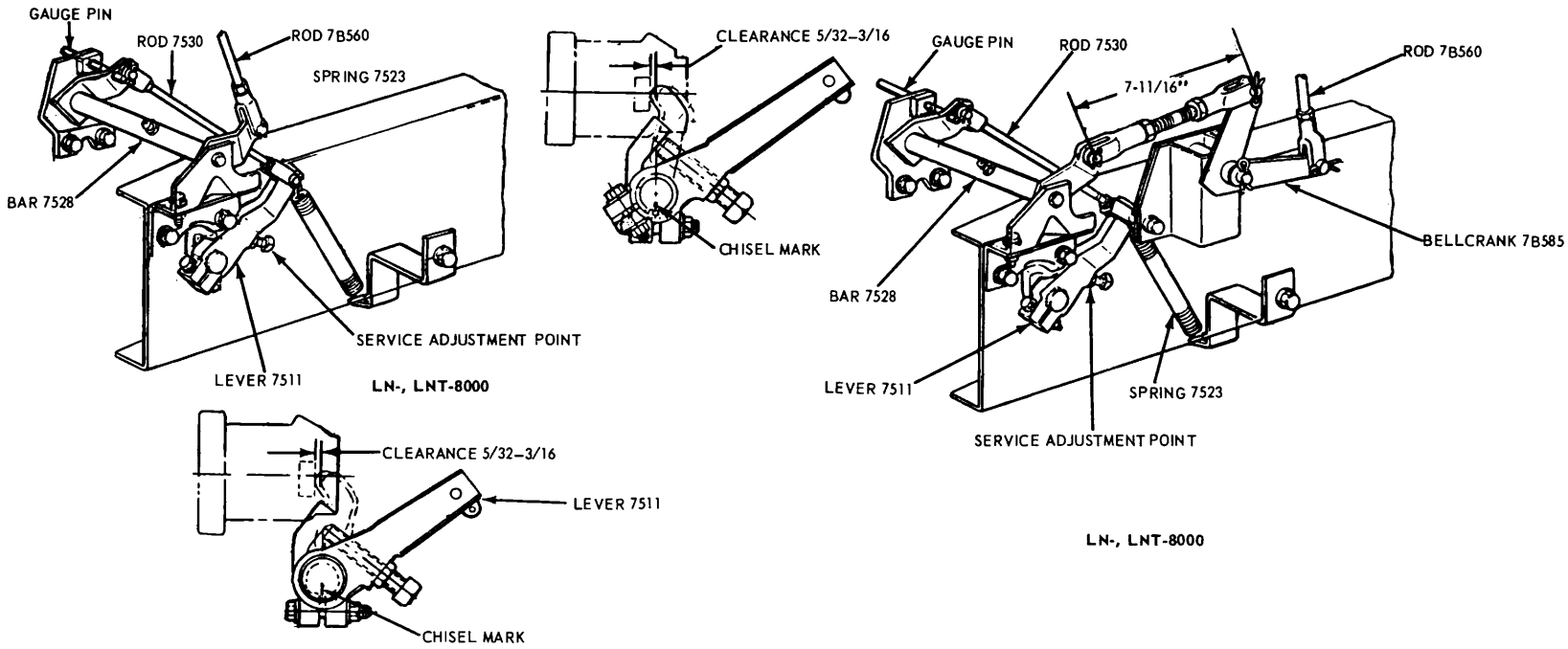

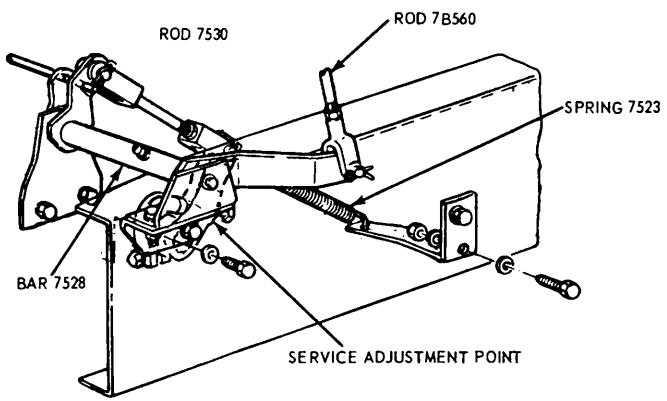

CLUTCH PEDAL
FREE TRAVEL 2-3/32 TO 2-5/16

CLUTCH LINKAGE ADJUSTMENT

1. DISCONNECT RETRACTING SPRING.
2. ADJUST CLUTCH PEDAL TOTAL TRAVEL AND RELEASE BEARING CLEARANCE.
3. DISCONNECT CLUTCH ROD 7B560 AT BAR 7528 AND INSTALL 0.25 INCH GAUGE PIN.
4. ADJUST ROD 7530 TO SECURE ZERO RELEASE BEARING LASH. BE SURE THAT BAR-TO-BELLCRANK DIMENSION IS AS SHOWN.
5. WITH THE PEDAL HELD AGAINST ITS STOP, ADJUST CLUTCH ROD 7B560 UNTIL THE CLEVIS PIN FITS FREELY IN BAR 7528.
6. REMOVE THE ALIGNMENT PIN.
7. LENGTHEN CLUTCH ROD 7B560 5 TURNS AND CONNECT TO BAR 7528. CONNECT RETRACTING SPRING.
8. CHECK RELEASE BEARING CLEARANCE, WHICH SHOULD BE AS SHOWN. IT IS NOT NECESSARY TO ADJUST CLUTCH LINKAGE EACH TIME THE PEDAL FREE TRAVEL IS ADJUSTED. MAINTAIN PEDAL FREE TRAVEL BY ADJUSTING AT THE POINT SHOWN.

FIG. 14 Clutch and Linkage—LN-6000 and 7000, LNT-8000 with Caterpillar Diesel Engine

C 2595-A

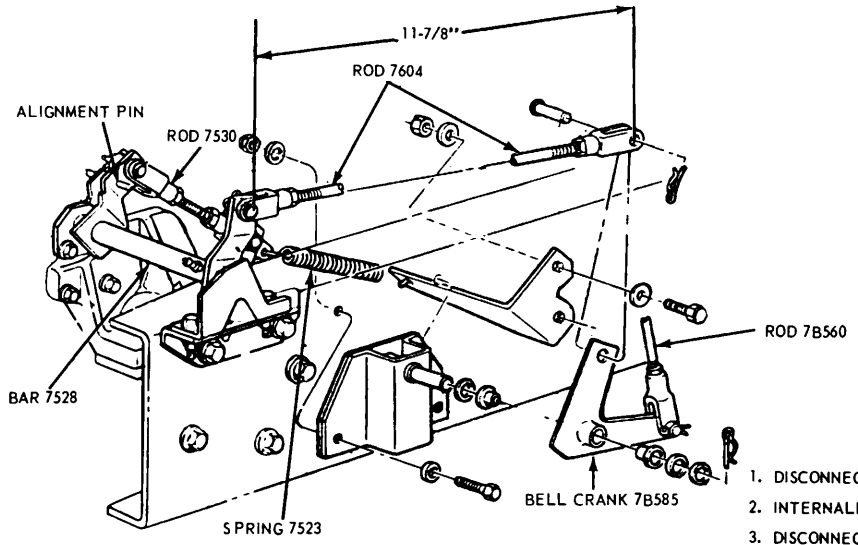

L, LT- AND LTS-8000

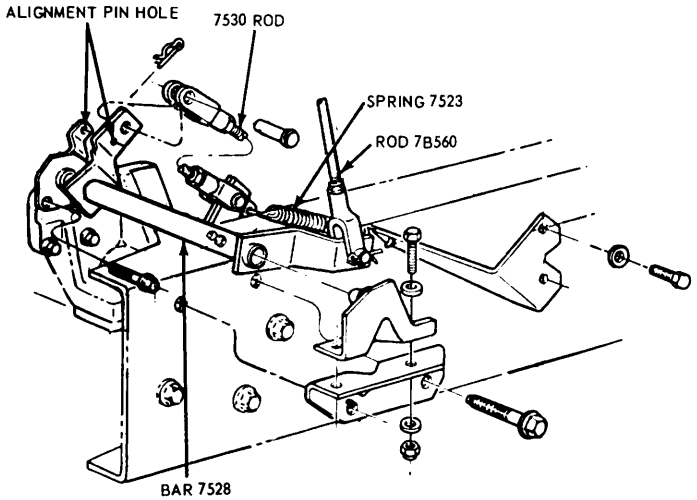

LN- LNT-8000

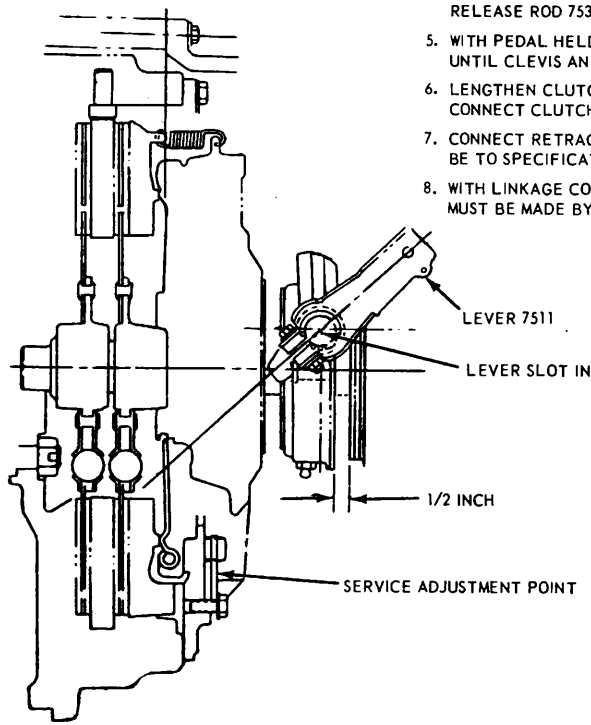

CLUTCH LINKAGE ADJUSTMENT

1. DISCONNECT RETRACTING SPRING AND ADJUST PEDAL TOTAL TRAVEL.
2. INTERNALLY ADJUST CLUTCH TO CLEARANCE SHOWN.
3. DISCONNECT CLUTCH ROD 7B560 AT EQUALIZER BAR 7528 AND INSTALL 0.25 GAUGE PIN AS SHOWN.
4. CHECK FOR ZERO RELEASE BEARING CLEARANCE. IF NOT, ADJUST RELEASE ROD 7530.
5. WITH PEDAL HELD AGAINST ITS STOP, ADJUST CLUTCH ROD 7B560 UNTIL CLEVIS AND PIN FIT FREELY INTO EQUALIZER BAR 7528.
6. LENGTHEN CLUTCH ROD 7B560 6 TURNS, REMOVE GAUGE PIN AND CONNECT CLUTCH ROD TO EQUALIZER BAR. TIGHTEN JAM NUTS.
7. CONNECT RETRACTING SPRING. PEDAL FREE TRAVEL SHOULD NOW BE TO SPECIFICATION.
8. WITH LINKAGE CORRECTLY SET, ALL PEDAL FREE PLAY ADJUSTMENTS MUST BE MADE BY INTERNALLY ADJUSTING THE CLUTCH.

FIG. 15 Clutch and Linkage—L-, LN-, LT-, LNT-, LTS-8000 with 6V53 Diesel Engine

C 2599-A

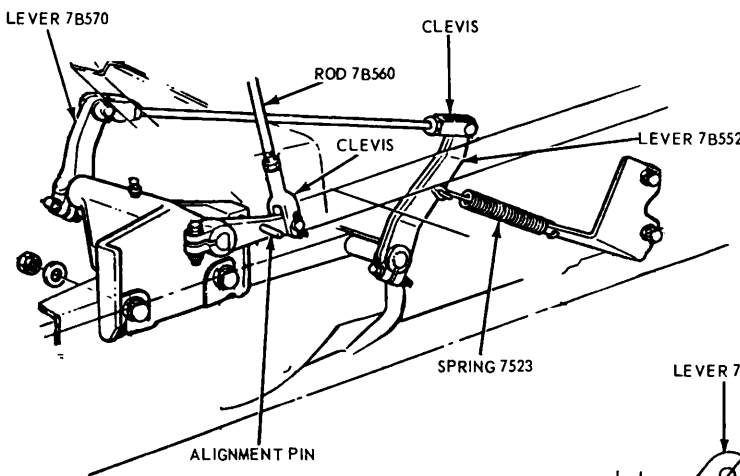

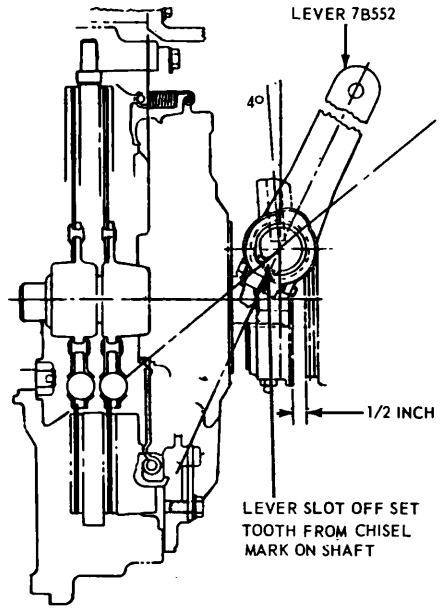

LN, LNT-9000 WITH MODELS 8552 AND 5H74 TRANSMISSIONS

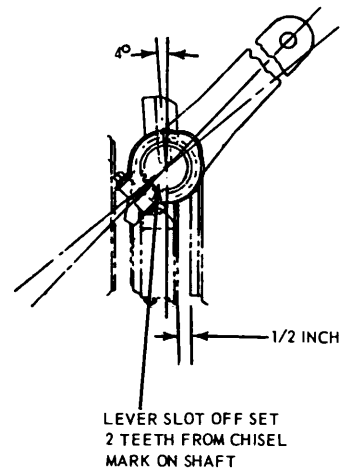

L, LT, LTS 9000 WITH MODELS 8552 AND 5H74 TRANSMISSIONS

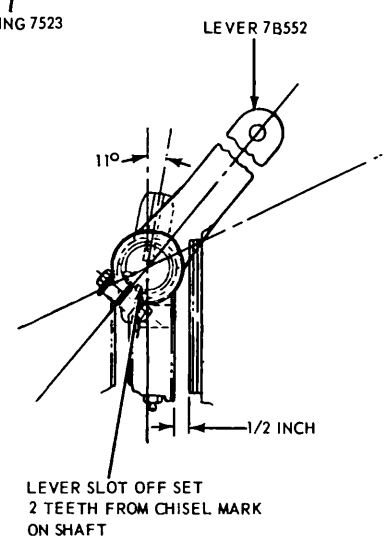

ALL MODELS USING T-905-A & B, RT, RTO-910 AND RTO-913 TRANSMISSIONS. RT-906 TRANSMISSION IN LN & LT MODELS

CLUTCH LINKAGE ADJUSTMENT

1. DISCONNECT RETRACTING SPRING AND ADJUST PEDAL TOTAL TRAVEL.
2. INTERNALLY ADJUST CLUTCH TO CLEARANCE SHOWN.
3. DISCONNECT CLUTCH ROD 7B560 AT EQUALIZER BAR 7528 ON BELLCRANK 7B585 AND INSTALL 0.25 GAUGE PIN AS SHOWN.
4. CHECK FOR ZERO RELEASE BEARING CLEARANCE. IF NOT, ADJUST RELEASE ROD 7530.
5. WITH PEDAL HELD AGAINST ITS STOP, ADJUST CLUTCH ROD 7B560 UNTIL CLEVIS AND PIN FITS FREELY INTO EQUALIZER BAR 7528 ON BELLCRANK 7B585.
6. LENGTHEN CLUTCH ROD 7B560 6 TURNS, REMOVE GAUGE PIN AND CONNECT CLUTCH ROD TO EQUALIZER BAR OR BELLCRANK. TIGHTEN JAM NUTS.
7. CONNECT RETRACTING SPRING. PEDAL FREE TRAVEL SHOULD NOW BE TO SPECIFICATION.
8. WITH LINKAGE CORRECTLY SET, ALL PEDAL FREE PLAY ADJUSTMENTS MUST BE MADE BY INTERNALLY ADJUSTING THE CLUTCH.

C 2597-A

FIG. 16 Clutch and Linkage—L-, LN-, LT-, LNT-, LTS-9000 with NH-Series or 6-71 Diesel Engines

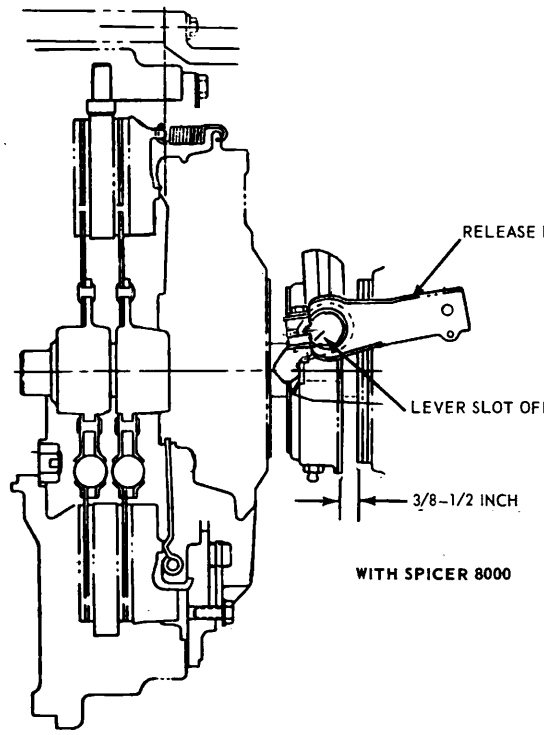

WITH SPICER 8000

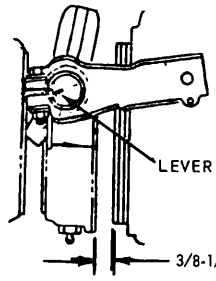

WITH FULLER T905-A & B, RT & RTO-910 AND RTO-913

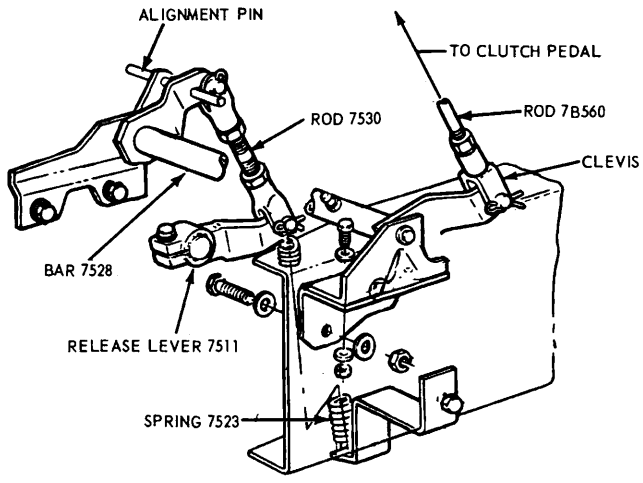

CLUTCH LINKAGE ADJUSTMENT

1. DISCONNECT RETRACTING SPRING AND ADJUST PEDAL TOTAL TRAVEL.
2. INTERNALLY ADJUST CLUTCH TO CLEARANCE SHOWN.
3. DISCONNECT CLUTCH ROD 7B560 AT EQUALIZER BAR 7528 AND INSTALL 0.25 GAUGE PIN AS SHOWN.
4. CHECK FOR ZERO RELEASE BEARING CLEARANCE. IF NOT, ADJUST R RELEASE ROD 7530
5. WITH PEDAL HELD AGAINST ITS STOP, ADJUST CLUTCH ROD 7B560 UNTIL CLEVIS AND PIN FIT FREELY INTO EQUALIZER BAR 7528.
6. LENGTHEN CLUTCH ROD 7B560 6 TURNS, REMOVE GAUGE PIN AND CONNECT CLUTCH ROD TO EQUALIZER BAR. TIGHTEN JAM NUTS.
7. CONNECT RETRACTING SPRING. PEDAL FREE TRAVEL SHOULD NOW BE TO SPECIFICATION.
8. WITH LINKAGE CORRECTLY SET, ALL PEDAL FREE PLAY ADJUSTMENTS MUST BE MADE BY INTERNALLY ADJUSTING THE CLUTCH.

FIG. 17 Clutch and Linkage—L-, LT-9000 with 8V-71 or V-903 Diesel Engines

C 2596-A

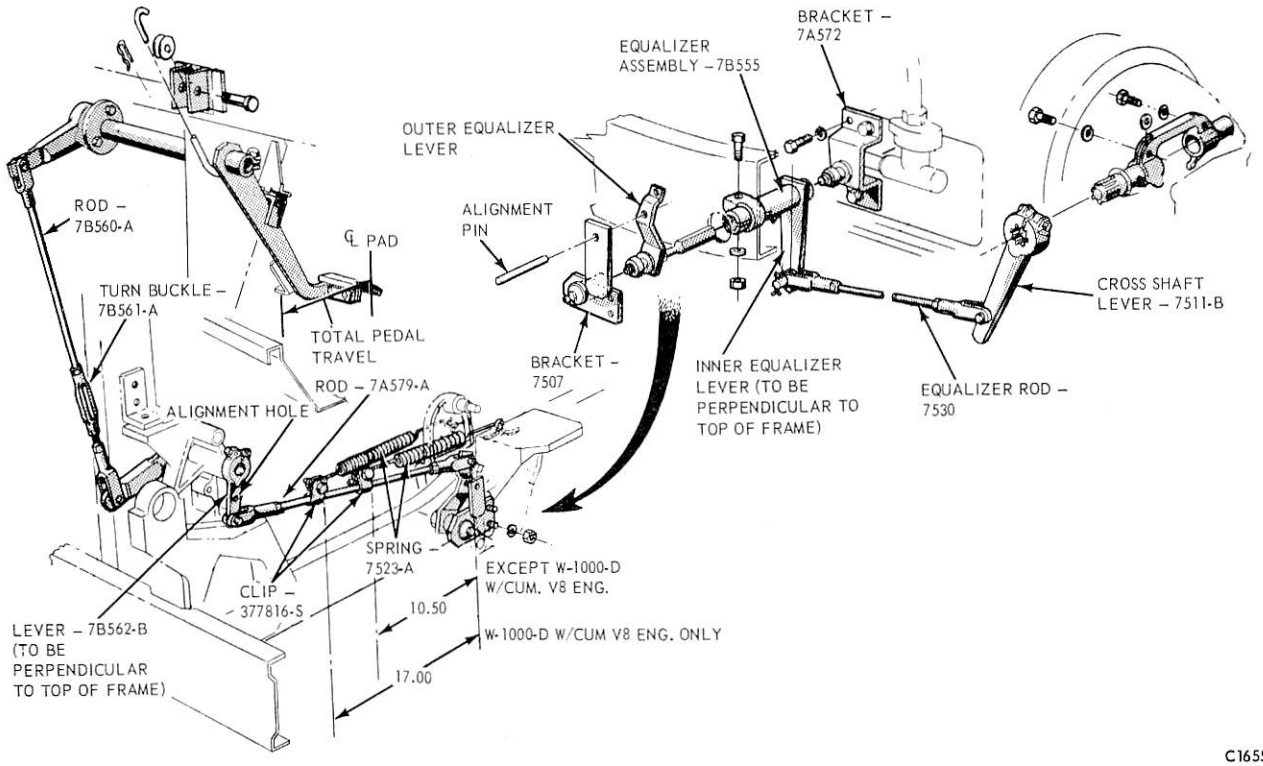

FIG. 18 Clutch Pedal Linkage Adjustment—W-Series

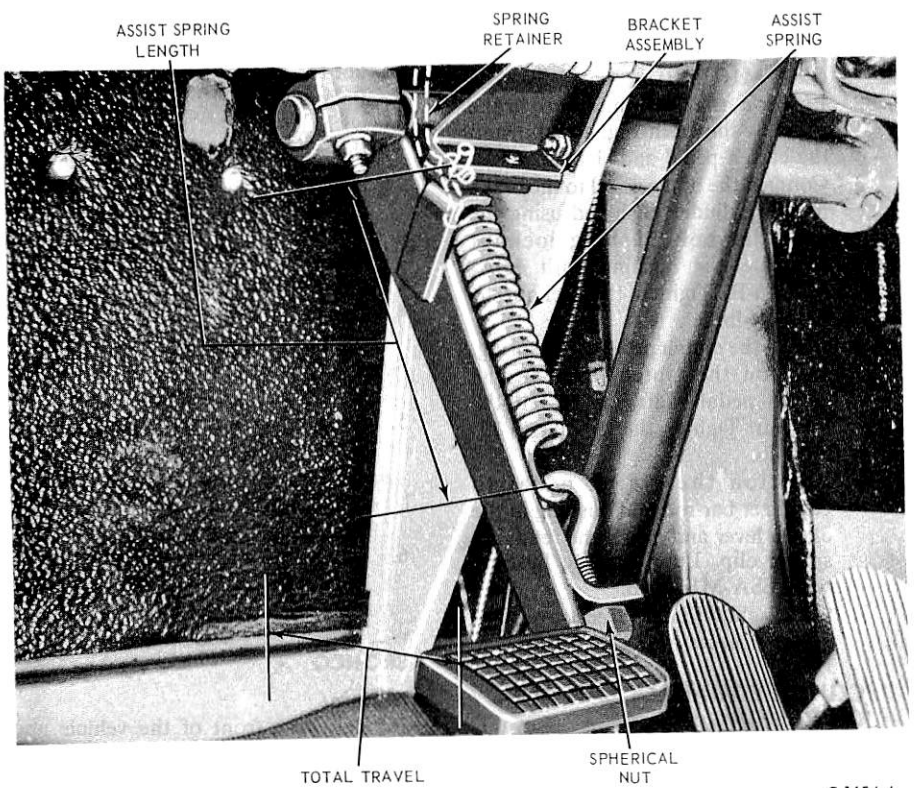

FIG. 19 Clutch Pedal and Assist Spring Adjustments—W-Series

REMOVAL AND INSTALLATION

CLUTCH PEDAL AND/OR BUSHING

ECONOLINE

Removal

1. Working under the dash, remove the retainer spring clip and disconnect the clutch pedal to equalizer bar rod (Fig. 1). Remove bushing from lever.
2. Remove the lock nut attaching the clutch lever to the clutch pedal assembly shaft and remove the lever.
3. Remove the shoulder bolt, bushing and locknut attaching the brake pedal to the master cylinder push rod.
4. Pull the clutch pedal and shaft outboard and remove the brake pedal and bushings along with the clutch pedal and shaft.

Installation

1. Lubricate the clutch pedal shaft and bushings with lithium base grease (ESA-M1C75-B).
2. Position the bushings and brake pedal as shown in Fig. 1 and install the clutch pedal and shaft.
3. Connect the brake pedal to the brake master cylinder push rod using the shoulder bolt, bushing and locknut Lubricate the bushing with ESA-M1C75-B. Tighten the locknut to 18-28 ft-lb.
4. Install the clutch pedal assist spring.
5. Position the clutch lever on the clutch pedal shaft and install the locknut. Tighten the locknut to 25-30 ft-lb.
6. Lubricate the bushing with ESA-M1C75-B and position the clutch pedal to equalizer bar rod and bushing in the clutch lever and install the retaining cotter pin.
7. Check clutch pedal free travel and adjust if necessary (Fig. 1).

BRONCO

Removal

1. Remove the spring retainer clip and disconnect the clutch pedal to equalizer bar rod from the clutch pedal (Fig. 3).
2. Remove the outboard spring retainer from the clutch pedal shaft and push the shaft inboard until the clutch pedal and bushings can be slid off the shaft.
3. Remove the pedal and bushings.

Installation

1. Lubricate the clutch pedal shaft and all bushings with lithium base grease (ESA-M1C75-B).
2. Position the shaft and bushings as shown in Fig. 3 and install the pedal.
3. Push the clutch pedal shaft outboard until it is in position. Install the spring retainer clip.
4. Connect the clutch pedal to equalizer bar rod and bushing to the clutch pedal and install the spring retainer clip. Lubricate the bushing with lithium base grease (ESA-M1C75-B).

F-100-350

Removal

1. Working under the dash, remove the retainer spring clip and disconnect the clutch pedal to equalizer bar rod (Fig. 4).
2. Remove the assist spring and insulators (if so equipped).
3. Remove the lock nut attaching the clutch lever to the clutch pedal assembly shaft and remove the lever.
4. Remove the shoulder bolt bushing and locknut attaching the brake pedal to the master cylinder push rod.
5. Pull the clutch pedal and shaft outboard and remove the brake pedal and bushings along with the clutch pedal and shaft.

Installation

1. Lubricate the clutch pedal shaft and bushngs with lithium base grease (ESA-M1C75-B).
2. Position the bushings and brake pedal as shown in Fig. 4 and install the clutch pedal and shaft.
3. Connect the brake pedal to the brake master cylinder push rod using the shoulder bolt bushing locknut lubricate the bushing with ESA-M1C75-B. Tighten the locknut to 18-28 ft-lb.
4. Install the clutch pedal assist spring.
5. Position the clutch lever on the clutch pedal shaft and install the locknut. Tighten the locknut to 25-30 ft-lb.
6. Position the clutch pedal to equalizer bar rod and bushing in the clutch lever and install the retaining spring clip. Lubricate the bushing with ESA-M1C75-B.
7. Check clutch pedal free travel and adjust if necessary (Fig. 4)

CLUTCH EQUALIZER BAR AND/OR BUSHING

ECONOLINE

Removal

1. Raise the front of the vehicle, and position safety stands.
2. Disconnect the clutch release lever retracting spring. Remove the spring retainer and washer from the equalizer bar lower pivot arm, and disconnect the clutch release rod (Fig. 2).
3. Remove the retainer and spring washer from the equalizer bar upper pivot arm, and disconnect the clutch pedal-to-equalizer bar rod.
4. Remove the locknuts and bolts that attach the equalizer bar mounting bracket to the under body side rail, then pull the bracket and equalizer bar assembly from the engine mounted pivot.
5. Remove the mounting bracket from the equalizer bar. Remove the bushings from both ends of the equalizer bar, if they did not remain on the pivots.

Installation

1. Assemble the integral mounting bracket and outer pivot and the bushing to the equalizer bar, then position the other end of the equalizer bar and bushing to the engine-mounted pivot (Fig. 2). Lubricate the bushings with ESA-M1C75-B lithium base grease.
2. Position the mounting bracket to the underbody side rail, and install the mounting bolts and locknuts. Do not torque the locknuts at this time.
3. Pack both ends of the equalizer bar with ESA-M1C75-B lube. Adjust the mounting bracket by pushing the bracket toward the center of the truck so that the equalizer bar covers both pivots and both bushings, then torque the mounting nuts to specification.
4. Connect the clutch pedal-to-equalizer bar rod to the equalizer bar upper pivot arm, and install the washer and retainer.
5. Connect the clutch release rod to the equalizer bar lower pivot arm, install the spring washers and cotter pin, and connect the clutch release lever retracting spring.
6. Adjust the clutch pedal free travel. Remove the safety stands, and lower the vehicle.

BRONCO

Removal

1. Raise the front of the vehicle and install safety stands.
2. Disconnect the clutch release lever retracting spring.
3. Remove the spring retainer and disconnect the clutch pedal to

equalizer bar rod and bushing from the equalizer upper arm (Fig. 3).
4. Remove the capscrews attaching the outer equalizer pivot bracket to the chassis frame and remove the bracket and equalizer bar.
5. Remove the spring retainer and disconnect the clutch release rod and spring washers from the equalizer bar (Fig. 3).
6. Remove the snap rings holding the equalizer bar bushings to the inner and outer pivot brackets and remove the bushings and washers.

Installation

1. Lubricate all bushings and pivot points with lithium base grease ESA-M1C75-B. Position the felt washers and ball-shaped bushings on the inner and outer pivot brackets as shown in Fig. 3 and install the snap rings.
2. Pack the cavities in the ends of the equalizer bar with lubricant ESA-M1C75-B. Position the equalizer bar over the inner pivot and install the outer pivot and bracket to the frame. Torque the attaching capscrews to specification (20-30 ft-lb).
3. Position the clutch release rod on the equalizer and install the spring washers and spring retainer.
4. Lubricate the clutch pedal to equalizer bar rod and bushing with ESA-M1C75-B. Connect to the equalizer bar and install the spring retainer.
5. Lubricate the clutch release rod with ESA-M1C75-B and connect to the clutch release lever. Connect the retracting spring.
6. Check clutch pedal free travel and adjust as necessary.
7. Remove the safety stands and lower the vehicle.

F-100-350 (4X2) (4X4)

Removal

1. Raise the front of the vehicle and install safety stands.
2. Disconnect the clutch release lever retracting spring.
3. Remove the retainer spring clip and disconnect the clutch pedal to equalizer bar rod and bushing from the equalizer outer arm (Fig. 4).
4. Remove the capscrews attaching the outer equalizer bar pivot bracket to the chassis frame and rmove the bracket and equalizer bar.
5. Remove the retainer spring clip and disconnect the clutch release rod assembly and spring washers from equalizer bar inner arm (Fig. 4).
6. Remove the snap rings holding the equalizer bar bushings to the inner and outer pivot brackets and remove the bushings and washers.

Installation

1. Lubricate all bushings and pivot points with lithium base grease. Position the felt washers and ballshaped bushings on the inner and outer pivot brackets as shown in Fig. 4 and install the snap rings.
2. Pack the cavities in the ends of the equalizer bar with lubricant ESA-M1C75-B. Position the equalizer bar over the inner pivot and install the outer pivot and bracket to the frame. Torque the attaching capscrews to specification (20-30 ft-lb). **Equalizer bar assembly should be parallel to dash panel and the ground and perpendicular to the engine crankshaft centerline.**
3. Position the clutch release rod assembly on the equalizer and install the spring washers and retainer sping clip.
4. Connect the clutch pedal to equalizer bar rod and bushing to the equalizer bar and install the cotter pin. Lubricate the bushing with lithium base grease ESA-M1C75-B.
5. Position the clutch release rod to the clutch release lever and connect the retracting spring. Lubricate release lever and release rod assembly with ESA-M1C75-B.
6. Check clutch pedal free travel and adjust as necessary (Fig. 4).
7. Remove the safety stands and lower the vehicle.

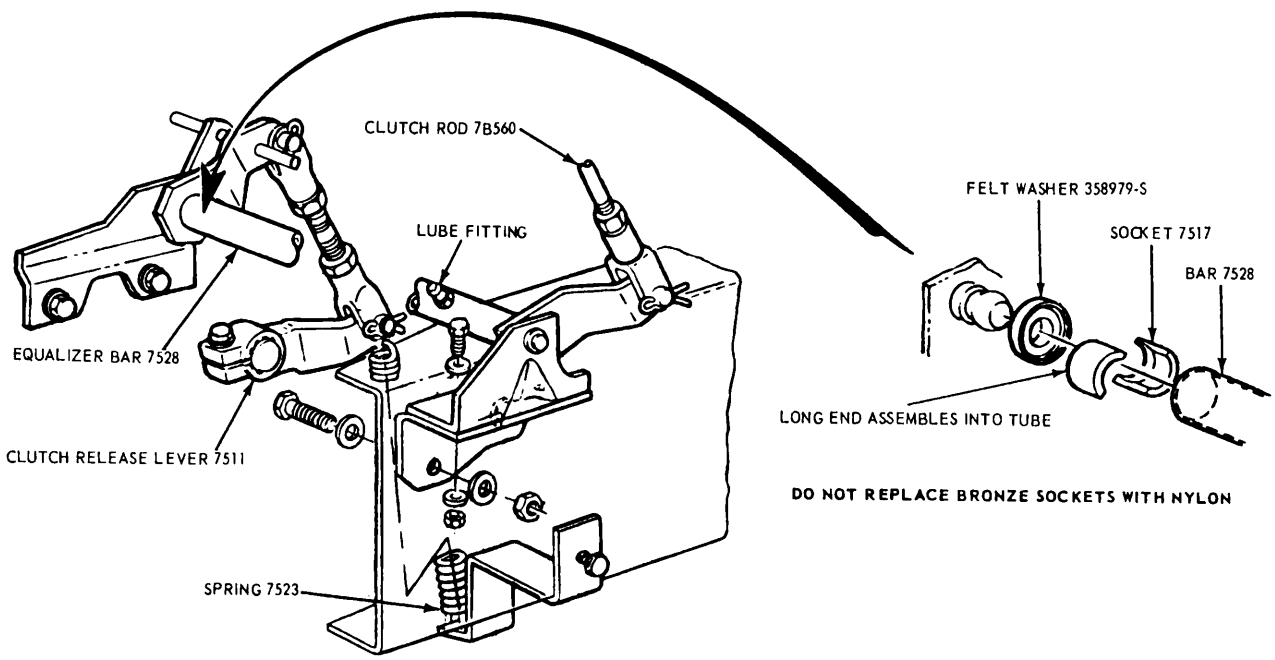

C 2604-A

FIG. 20 Clutch Equalizer Bar—L-Series

L-SERIES

Disconnect points for this equalizer bar are shown in fig. 20. Linkage adjustments for L-Series are shown in this Part.

When replacing bushings in this equalizer bar, be sure not to replace bronze bushings with nylon. Bronze bushings are used in some installations because of their heat resistance.

SPECIFICATIONS

MECHANICAL CLUTCH LINKAGE ADJUSTMENTS – (DIMENSIONS IN INCHES)

Models	Pedal Height	Total Travel	Free Travel
Bronco	6-3/4–7	6-3/4–7	3/4–1-1/2
Econoline	7-1/2–7-3/4	7-1/2–7-3/4	3/4–1-1/2
F-100-350	N.A.	N.A.	3/4–1-1/2
F- and B-500-750	7-9/16	7-7/8	1/4 ①
F- and B-6000-7000	7-9/16	7-7/8	1/8 ①
Model 84-Chassis and Cowl	11-1/8	8-21/32	1/4 ①
LN-600; L, LN, LT, LNT, LTS-800			2-1/4–2-1/2
LN-6000; L, LN, LT, LNT, LTS-8000 with Caterpillar Engine			2–2-1/4
LN-750			1-7/8–2-1/8
L, LN, LT, LNT, LTS-8000	13 ③	10-7/16	2–2-5/16 ②
L, LN, LT, LNT, LTS-900; SAE Housing			2–2-5/16
L, LN, LT, LNT, LTS-900; Ford Housing			1-7/8–2-1/8
L, LN, LT, LNT, LTS-9000			2–2-5/16 ②
L, LT-9000 w/8V-71 or V-903 Engine			2–2-1/4 ②
W-Series		10-1/2–11	1-3/8–1-1/2 ②

① Clearance of Release Lever
② Internally adjust clutch to maintain pedal free travel
③ Travel to Firewall

CC2159-D

PART 16-04 Hydraulic Clutch Linkage

COMPONENT INDEX	Page	COMPONENT INDEX	Page
CLUTCH PEDAL ADJUSTMENT		CLUTCH HYDRAULIC SYSTEM BLEEDING METHOD – ALL VEHICLES	
P-Series	04-01	Pressure Tank Bleeding	04-01
C-Series	04-01	Gravity Bleeding Method	04-01

ADJUSTMENTS

CLUTCH PEDAL

Before making any adjustments, be sure that the system is free of air and that the master cylinder fluid is at the specified level.

P-SERIES

P-350-400

Adjust the clutch slave cylinder push rod per the instructions shown in Fig. 1.

P-500

Adjust the clutch master cylinder and slave cylinder push rods per the instructions shown in Fig. 2.

C-SERIES

Adjust the C-Series clutch pedal and clutch slave cylinder per the instructions shown in Fig. 3.

CLUTCH HYDRAULIC SYSTEM BLEEDING METHOD—ALL VEHICLES

An effective and simplified method has been developed for bleeding clutch hydraulic systems with a minimum waste of hydraulic clutch fluid. Instructions are given below:

PRESSURE TANK BLEEDING

1. Connect a transparent bleeder hose to the pressure tank hose connector. Attach the bleeder hose to the slave cylinder bleeder screw and fill the empty cylinders.
2. Adjust the pressure tank fluid flow so that the master cylinder does not fill too fast. The C-Series cylinder can be filled faster than the P model master cylinders since the relief port is much larger. Too fast a flow rate will cause spillage, because a stream of fluid will be expelled from the small relief port of conventional type cylinders.
3. Close the bleeder screw on the slave cylinder when the fluid in the master cylinder reservoir is approximately 1/2 inch from the top. No further bleeding should be necessary, since all the air in the system would exhaust through the master cylinder relief port.
4. Check the slave cylinder push rod total travel, which should be at least 1 1/8 inch.

The clutch master cylinder relief port must be open in order to bleed the system. Clutch master cylinder push rod lash of 1/4 inch is required on the P-500 series vehicles to permit the conventional type master cylinder piston to return to the piston stop ring and open the relief port. The clutch master cylinder cannot be adjusted on the P-350 and 400 series vehicles. In C-Series master cylinders, the O-ring seal on the end of the push rod must not seat against the piston. Uncovering of the piston port is accomplished by adjustment of the push rod to a piston lash of 1/4 inch. Forcing the clutch pedal to compress the pedal bumper more than normal by jamming a screwdriver between the pedal pad and the floor insures a complete uncovering of the relief port.

GRAVITY BLEEDING METHOD

1. Attach a funnel to a transparent bleeder hose. Attach the hose to the bleeder screw of the slave cylinder. The funnel must be higher than the master cylinder. Pour hydraulic fluid in the funnel as the system is filling. Do not agitate the fluid more than necessary in order to prevent air bubbles forming in the fluid.
2. Repeat steps 3 and 4 as for pressure tank bleeding. **Note: The funnel method requires caution to prevent air entering the fluid as the system is being filled.**

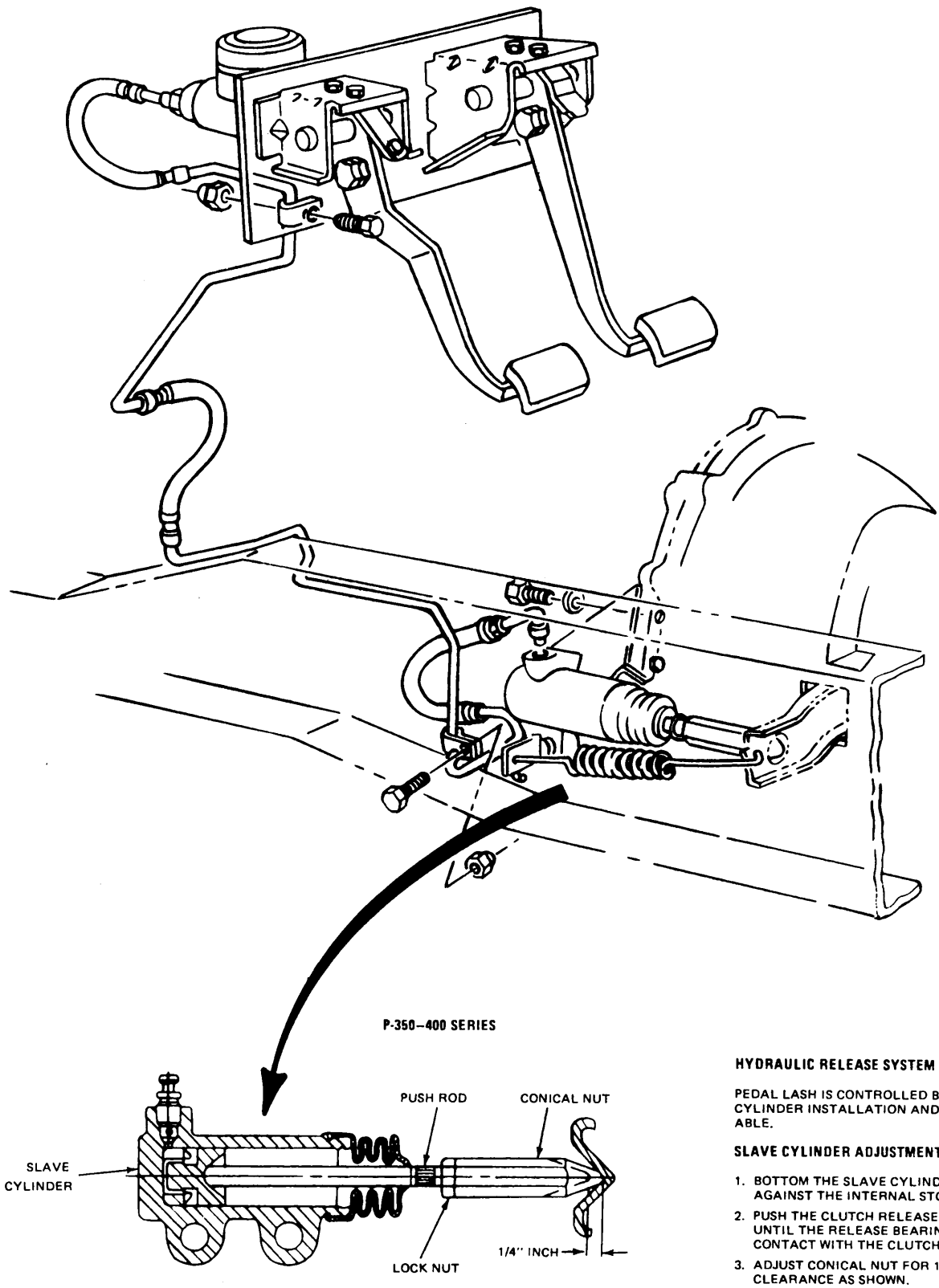

HYDRAULIC RELEASE SYSTEM ADJUSTMENT

PEDAL LASH IS CONTROLLED BY THE MASTER CYLINDER INSTALLATION AND IS NOT ADJUSTABLE.

SLAVE CYLINDER ADJUSTMENT

1. BOTTOM THE SLAVE CYLINDER PUSH ROD AGAINST THE INTERNAL STOP.
2. PUSH THE CLUTCH RELEASE LEVER BACK UNTIL THE RELEASE BEARING MAKES CONTACT WITH THE CLUTCH FINGERS.
3. ADJUST CONICAL NUT FOR 1/4 INCH CLEARANCE AS SHOWN.
4. TIGHTEN THE JAM NUT AGAINST THE CONICAL NUT.

C2603-A

FIG. 1 Clutch Free Travel Adjustment—P-350-400

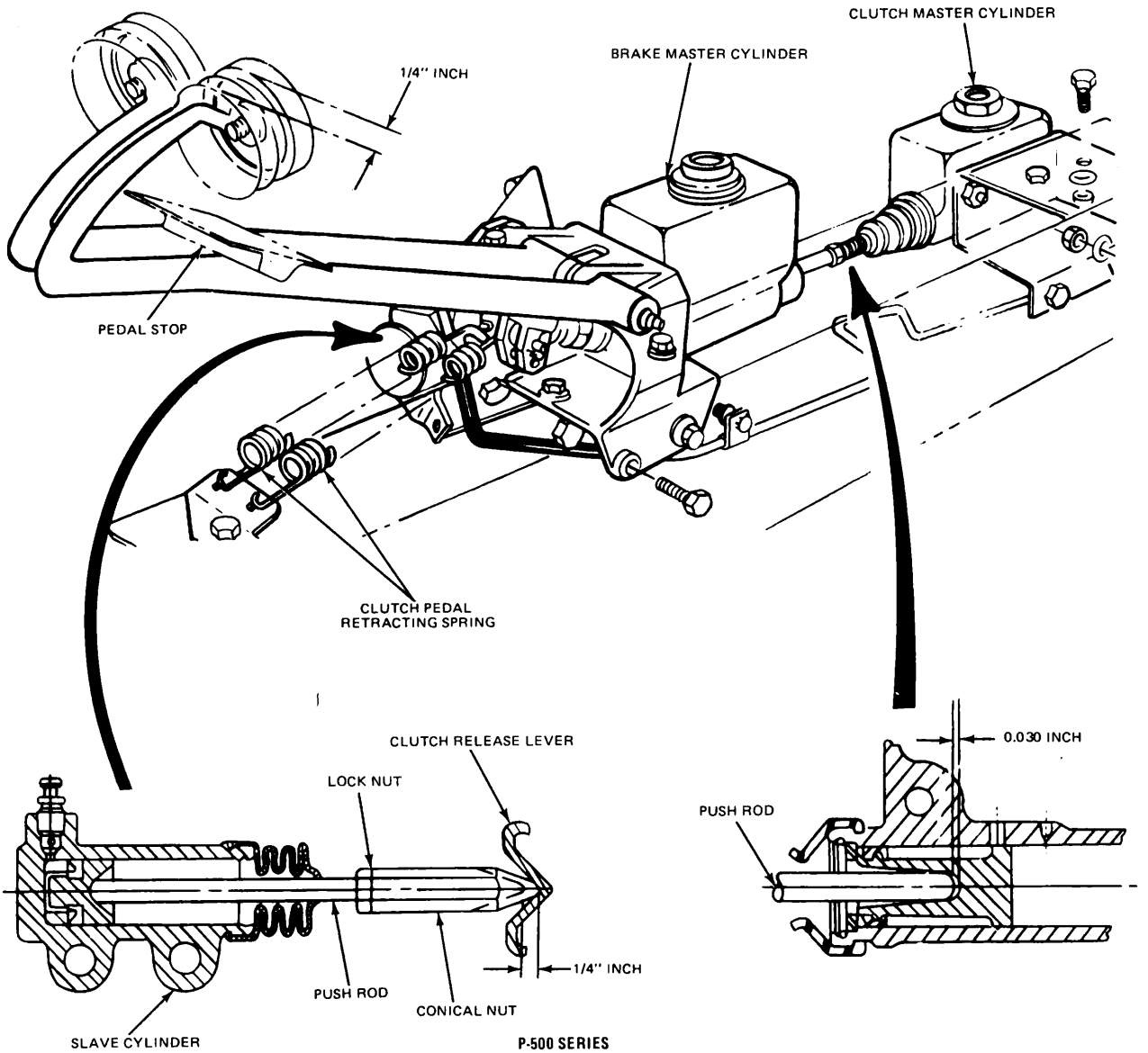

CLUTCH PEDAL AND HYDRAULIC RELEASE SYSTEM ADJUSTMENT

1. WITH RETRACTING SPRING ATTACHED AND THE PEDAL AGAINST STOP, ADJUST THE MASTER CYLINDER PUSH ROD TO GIVE 1/4-INCH FREE PLAY, MEASURED AT THE PEDAL AS SHOWN. (THIS PROVIDES A PUSH ROD CLEARANCE OF 0.030 INCH AT THE PISTON TO ALLOW UNCOVERING OF THE PISTON PORT WHEN THE PEDAL IS IN THE RELEASED POSITION).
2. TIGHTEN THE PUSH ROD JAM NUT SECURELY.
3. WITH THE SLAVE CYLINDER PISTON PUSHED BACK AGAINST THE INTERNAL STOP, PUSH THE CLUTCH RELEASE LEVER BACK UNTIL THE RELEASE BEARING IS AGAINST THE CLUTCH FINGERS.
4. BACK OFF THE JAM NUT AND ADJUST THE CONICAL NUT TO OBTAIN A 1/4-INCH CLEARANCE ON THE RELEASE LEVER AS SHOWN. (THIS ADJUSTMENT PROVIDES AN INTERNAL CLEARANCE OF 0.120 INCHES BETWEEN THE CLUTCH FINGERS AND THE RELEASE BEARING.)
5. TIGHTEN THE JAM NUT AGAINST THE CONICAL NUT.

C2275-B

FIG. 2 Clutch Free Travel Adjustment—P-500

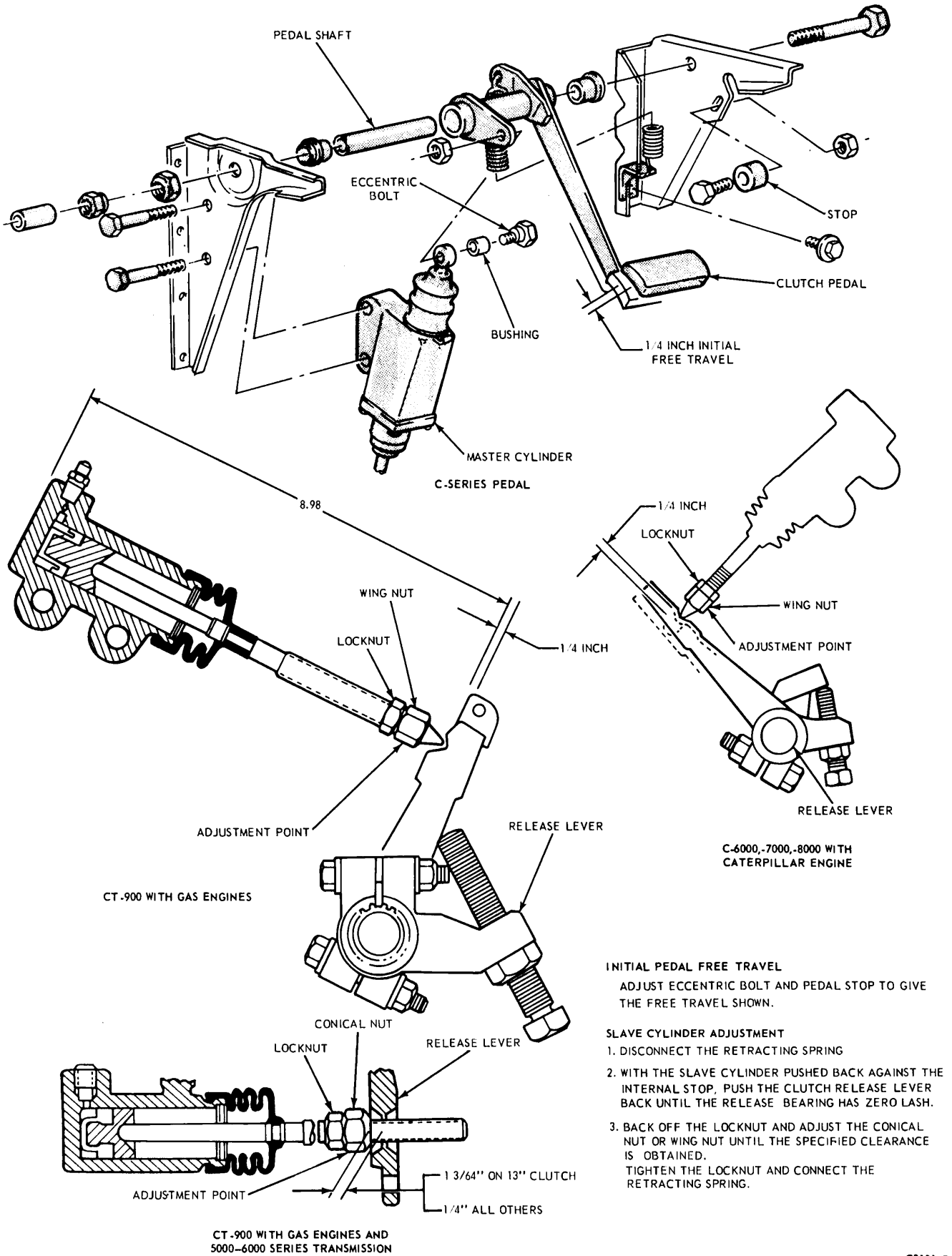

INITIAL PEDAL FREE TRAVEL

ADJUST ECCENTRIC BOLT AND PEDAL STOP TO GIVE THE FREE TRAVEL SHOWN.

SLAVE CYLINDER ADJUSTMENT

1. DISCONNECT THE RETRACTING SPRING
2. WITH THE SLAVE CYLINDER PUSHED BACK AGAINST THE INTERNAL STOP, PUSH THE CLUTCH RELEASE LEVER BACK UNTIL THE RELEASE BEARING HAS ZERO LASH.
3. BACK OFF THE LOCKNUT AND ADJUST THE CONICAL NUT OR WING NUT UNTIL THE SPECIFIED CLEARANCE IS OBTAINED.
   TIGHTEN THE LOCKNUT AND CONNECT THE RETRACTING SPRING.

C2101-B

FIG. 3 Clutch free Travel Adjustment—C-Series

PART 16-10 General Manual Transmission Service

Applies To All Trucks

COMPONENT INDEX	Page
CLEANING	10-05
DIAGNOSIS	10-03
GEAR SHIFT LINKAGE	
Auxiliary Transmission	
Adjustment	10-03
Installation	10-03
Removal	10-03
C-Series	
Adjustment	10-03
Installation	10-03
Removal	10-03
GENERAL INFORMATION	10-01
INSPECTION	
Bearings	10-07
Case	10-07
Countershaft Gear and Countershift	10-08
Gear Shift Housing	10-07
Input Shaft	10-08
INSPECTION - Cont.	
Output Shaft	10-08
Reverse Idler Gear	10-08
Synchronizer Blocking Rings	10-08
Thrust Washers, Synchronizer Discs and Bearing Covers	10-08
REAR BUSHING AND SEAL	
Installation	10-06
Removal	10-06
REAR CROSS SHAFT HOUSING AND LINKAGE	
Installation	10-06
Removal	10-05
REAR SEAL	
Installation	10-06
Removal	10-06
SPECIAL SERVICE TOOLS	10-09

GENERAL INFORMATION

IDENTIFICATION

See Figure 1 for the codes used to identify the various manual and auxiliary transmissions available in 1972 truck vehicles.

T.R.S. SWITCH

Certain manual transmissions are equipped with a Transmission Regulated Spark switch which signals the distributor spark advance control when the transmission is in high gear. This switch is used on three and four-speed transmissions. A typical Ford 3-speed transmission installation is shown in Fig. 2.

The Ford three-speed transmission T.R.S. switch should not be removed unless it is to be replaced with a new switch because the sealant tape on the switch threads will be damaged. **Never use a gasket with this switch.**

The four-speed T.R.S. switch used in trucks is sealed with a gasket and can be removed and installed without requiring replacement.

RATING PLATE

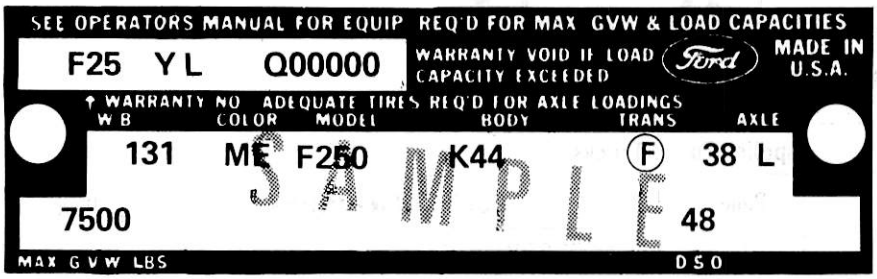

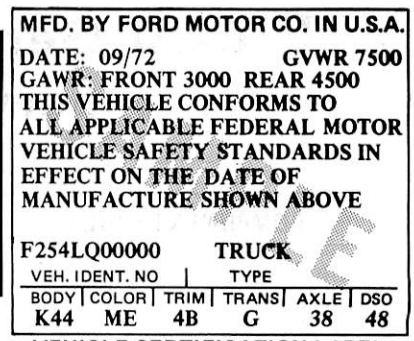

VEHICLE CERTIFICATION LABEL

TRANSMISSION CODES

Bronco, Econoline, Club Wagon, Parcel, School bus, and F-B-P-100-600 Series

Code	Description	Code	Description
A	4-Speed New Process 435	P	4-Speed Warner T19
C	3-Speed Ford L.D.	T	5-Speed New Process 542-F0 0/Dr.
E	3-Speed Warner H.D. T87G	2	5-Speed Clark 282-V Direct
F	4-Speed Syn. Warner T18	4	5-Speed Clark 280-V0 0/Dr.
M	5-Speed Clark 285-V Direct	9	5-Speed New Process 542-FD Direct
O	5-Speed New Process 542-FL Direct		

700-9000-LN500-9000-C500-900 Series

Code	Description	Code	Description
A	4-Speed New Process 435 (3)	P	4-Speed Warner T-19 (1)
B	16-Speed Spicer 8516 O/Drive (1)	Q	5-Speed Spicer 5652 Direct (1)
C	10-Speed Fuller RT610 Direct (1)	R	16-Speed Spicer 8716 O/Drive (1)
D	5-Speed Clark 387V Direct (1)	S	5-Speed Spicer 5756B Direct (1)
E	5-Speed Fuller 5H74 Direct (1)	T	5-Speed New Process 542-F0 0/Drive (3)
F	Fuller 5HA74 (Aluminum) (2)	U	5-Speed Spicer 6852G Direct (1)
G	5-Speed Clark 380V0 0/Drive (1)	V	10-Speed Fuller RT910 Direct (2)
H	13-Speed Fuller RT09513 0/Drive (1)	W	5-Speed Spicer 6352B Direct (1)
J	13-Speed Fuller RT0F9513 0/Drive	X	5-Speed Fuller T905A Direct (2)
K	5-Speed Spicer 6453A Direct (1)	1	5-Speed Spicer 8552A Direct (2)
M	5-Speed Clark 285V Direct (1)	2	5-Speed Clark 282V Direct (1)
N	5-Speed Spicer 6352 Direct (1)	4	5-Speed Clark 280V0 0/Drive (1)
O	5-Speed Fuller T905B Direct (2)	5	10-Speed Fuller RT0 910 0/Drive (2)
0	5-Speed New Process 542-FL Direct (3)	7	5-Speed Clark 385V Direct (1)
		9	5-Speed New Process 542-FD Direct (3)

(1) Gasoline or Diesel engines (2) Diesel only (3) Gasoline only

AUXILIARY TRANSMISSION CODES

Code (1)	Type	Ratio	Code (1)	Type	Ratio
2	3-Speed Spicer	5831-D 2.0/.85	5	4-Speed Spicer	8341-C 2.40/1.29/.84
3	3-Speed H.D. Spicer	7231-B 1.24/.86	6	3-Speed Spicer	8031-C 2.59/.79
4	3-Speed H.D. Spicer	7231-D 2.14/.86	8	4-Speed Spicer	7041 2.31/1.21/.83

NOTE: When required, the auxiliary transmission code will be stamped directly in front of the transmission code.

(1) If the "New Process" transmission is installed, the auxiliary transmission code will bear the suffix "N"

C2156-D

FIG. 1 Transmission Identification

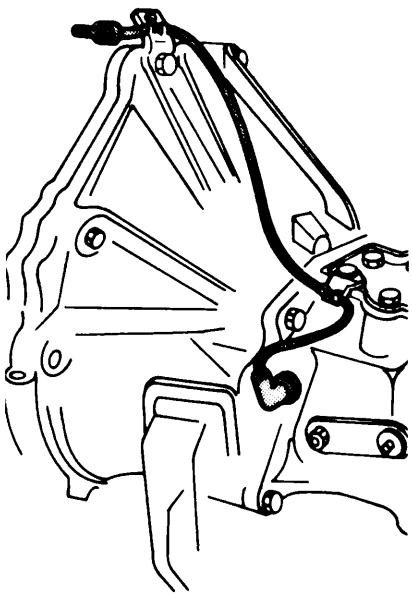

FIG. 2 T.R.S. Switch Installation—Ford 3-Speed Transmission

DIAGNOSIS

TRANSMISSION

Refer to the Truck Diagnosis Manual for diagnosis information and procedures.

ADJUSTMENTS

GEAR SHIFT LINKAGE

C-SERIES

Refer to Fig. 3 for instructions on C-Series shift linkage adjustments.

AUXILIARY TRANSMISSION

Refer to Fig. 4 for instructions on adjusting auxiliary transmission shift linkage.

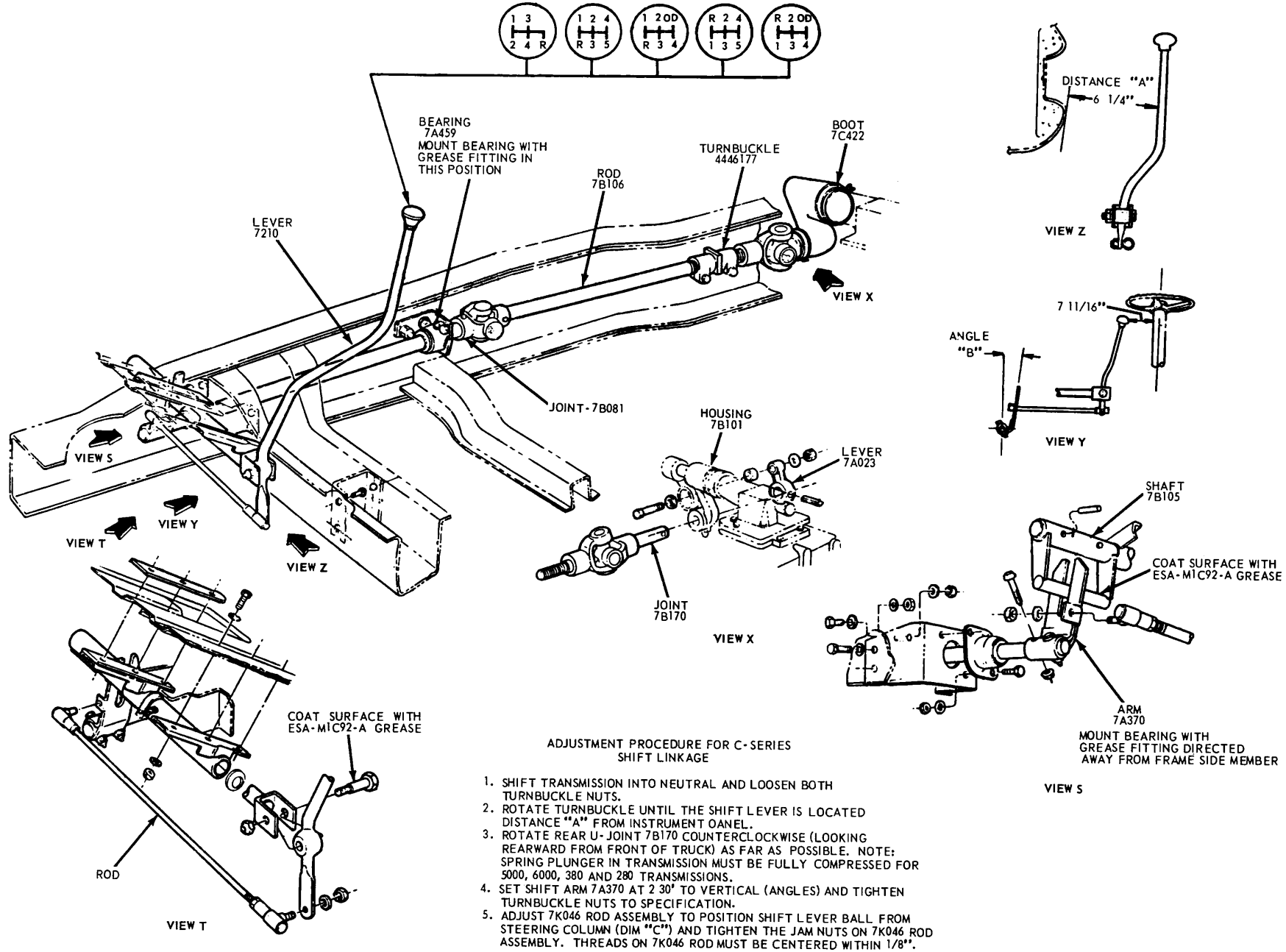

ADJUSTMENT PROCEDURE FOR C-SERIES SHIFT LINKAGE

1. SHIFT TRANSMISSION INTO NEUTRAL AND LOOSEN BOTH TURNBUCKLE NUTS.
2. ROTATE TURNBUCKLE UNTIL THE SHIFT LEVER IS LOCATED DISTANCE "A" FROM INSTRUMENT OANEL.
3. ROTATE REAR U-JOINT 7B170 COUNTERCLOCKWISE (LOOKING REARWARD FROM FRONT OF TRUCK) AS FAR AS POSSIBLE. NOTE: SPRING PLUNGER IN TRANSMISSION MUST BE FULLY COMPRESSED FOR 5000, 6000, 380 AND 280 TRANSMISSIONS.
4. SET SHIFT ARM 7A370 AT 2 30' TO VERTICAL (ANGLES) AND TIGHTEN TURNBUCKLE NUTS TO SPECIFICATION.
5. ADJUST 7K046 ROD ASSEMBLY TO POSITION SHIFT LEVER BALL FROM STEERING COLUMN (DIM "C") AND TIGHTEN THE JAM NUTS ON 7K046 ROD ASSEMBLY. THREADS ON 7K046 ROD MUST BE CENTERED WITHIN 1/8".

FIG. 3 Typical Gear Shift Linkage C-Series

C2607-A

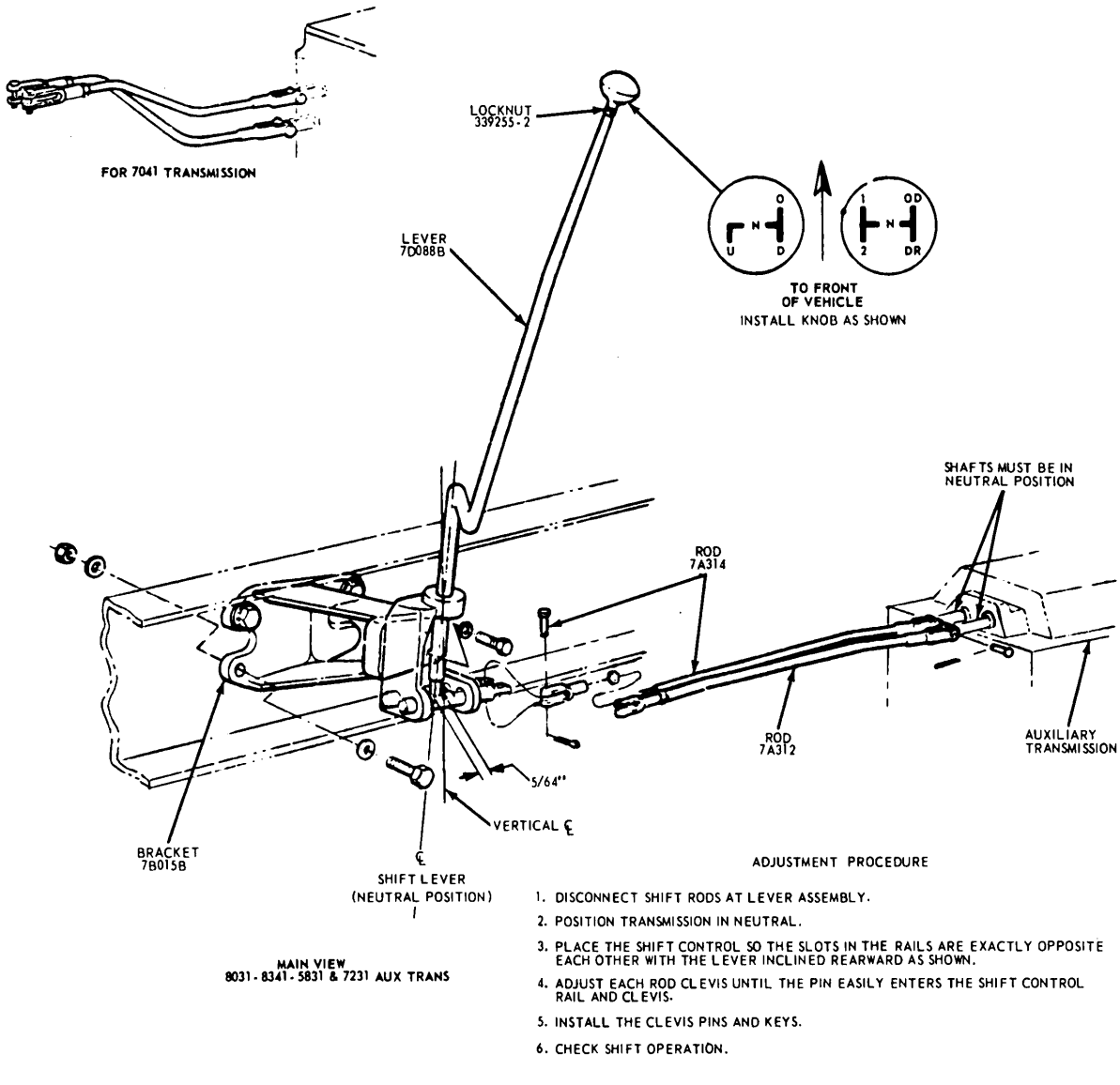

FIG. 4 Typical Auxiliary Transmission Linkage

REMOVAL AND INSTALLATION

GEAR SHIFT LINKAGE

C-SERIES

Removal

1. Disconnect points for this linkage are shown in Fig. 3.

Installation

1. Connection points for this linkage are shown in Fig. 3, along with lubrication and adjustment instructions.

AUXILIARY TRANSMISSION

Removal

Disconnect points for this linkage are shown in fig. 4.

Installation

Connection points and adjustment instructions for this linkage are given in Fig. 4.

REAR CROSS-SHAFT HOUSING AND LINKAGE

Removal

1. Shift the transmission into neutral, remove the protective boot from the linkage, drive out the pin that attaches the U-joint shaft to the lower selector lever (Fig. 3).
2. Remove the lower selector lever from the U-joint shaft, and remove the U-joint.
3. Drive out the pin that holds the upper selector lever on the cross-shaft, and remove the lever.
4. Remove the snap ring from housing bore that holds the shift lever on the cross-shaft. Remove the lever and remove the snap ring from the lever.

5. Remove the bolts that attach the cross-shaft housing on the transmission adapter, and remove the housing by lifting it straight up.
6. After removing the safety wire, loosen the shift finger retaining bolts and remove the cross-shaft and the shift finger.
7. Remove the shift finger Woodruff key from the cross-shaft.

Installation

1. Position the shift finger Woodruff key in the cross-shaft.
2. Position the cross-shaft and the shift finger in the housing.
3. Tighten the shift finger attaching bolts, and install the safety wire.
4. Position the housing on the adapter by lowering the housing vertically, and install the housing bolts. Torque the bolts to specification.
5. Apply Lubriplate or equivalent to the splines on the cross-shaft, the shift lever, and the upper selector lever. Position the snap ring on the shift lever, and position the lever on the cross-shaft. Install the snap ring in the housing bore.
6. Install the upper selector lever on the cross-shaft.
7. Position the U-joint, install the lower selector lever, and lubricate it at all fittings (Fig. 3).
8. Install the protective boot and adjust the linkage.

REAR SEAL

BRONCO, E-100-300, F-100-350 AND P-SERIES

Removal

1. Remove the drive shaft.
2. Remove the seal from the extension housing with the tool shown in Fig. 5.

Installation

1. Install the new seal in the extension housing with the tool shown in Fig. 6. Lubricate the seal with ESA-M1C75B.
2. Install the drive shaft.

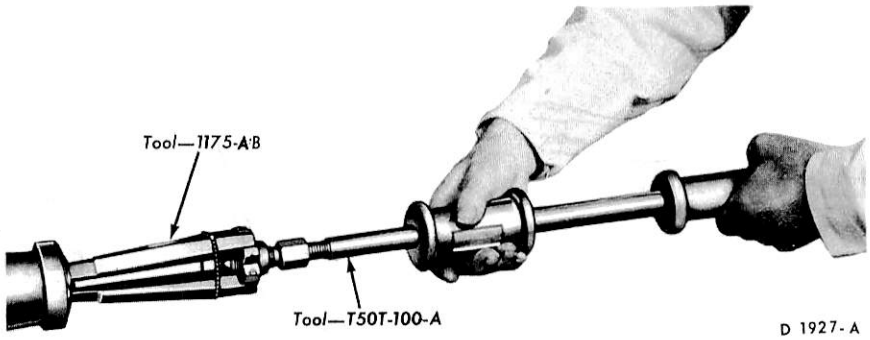

FIG. 5 Removing Extension Housing Seal

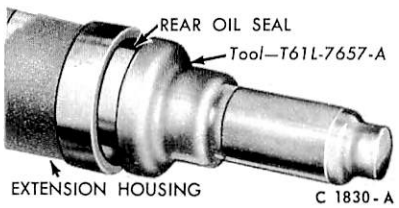

FIG. 6 Installing Extension Housing Seal

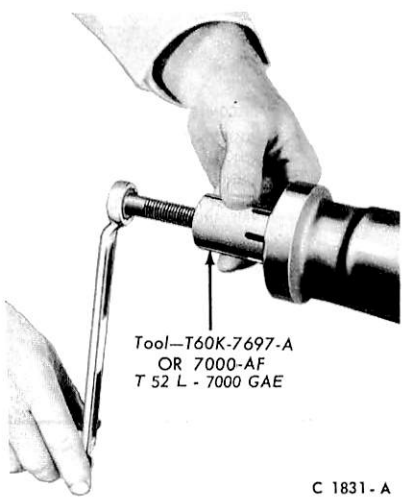

FIG. 7 Removing Extension Housing Bushing and Seal

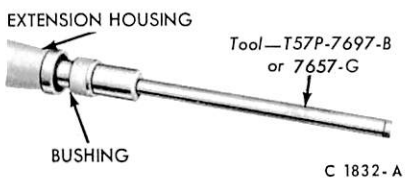

FIG. 8 Installing Extension Housing Bushing

REAR BUSHING AND SEAL

BRONCO, ECONOLINE, E-100-300, F-100-350 AND P-SERIES

Removal

1. Disconnect the drive shaft from the transmission.
2. Insert the tool shown in Fig. 7 into the extension housing until it grips on the front side of the bushing.
3. Turn the screw clockwise until the seal and the bushing are free of the housing.

Installation

1. Lubricate with ESA-M1C75-B; then drive a new bushing into the extension housing with the tool shown in Fig. 8.
2. Install a new seal in the housing as shown in Fig. 6. Lubricate the seal with ESA-M1C75-B.
3. Connect the drive shaft to the transmission.

CLEANING AND INSPECTION

TRANSMISSION

CLEANING

After the transmission has been disassembled, soak the parts except the bearings, in a cleaning solvent until all the old lubricant is dissolved or loosened. Brush or scrape all foreign matter from the parts. Be careful not to damage any of the parts with the scraper.

An excessive amount of foreign material usually results from a bearing failure, gear seizure, tooth breakage, extreme synchronizer wear, or clashing gears. **In such cases, the input and output shaft bearings should be carefully inspected and replaced if necessary. Since countershaft bearings, output shaft pilot bearings, and reverse idler bearings are not so susceptible to damage from foreign material in the lubricant they need not be replaced if they seem satisfactory.**

Wipe the parts or blow compressed air on them until they are thoroughly dry.

To clean the bearings, rotate them in clean solvent until all lubricant is removed. Hold the bearing assembly, to prevent it from rotating and dry it with compressed air.

When the bearings are dry, lubricate them thoroughly with transmission lubricant, and cover them with a clean, lint-free cloth until ready for use.

INSPECTION

Inspect all transmission parts before assembly to determine if they should be replaced.

SUB-ASSEMBLIES

GEAR SHIFT HOUSING

Check the operation and condition of the shift levers, forks and shift rails. If binding occurs when the levers are operated, disassemble the housing assembly, and replace the worn or damaged parts. Lubricate the shift lever ball seat and trunnion with Chassis Lube, Specification ESA-MIC 75-B.

Replace a cover that is bent or distorted. Make sure that the vent hole in the case is open.

TRANSMISSION CASE

Inspect the case for cracks, worn or damaged bearing bores, damaged threads, or other similar damage. If any of these conditions are present, replace the case. Cases may be welded or brazed if the cracks do not extend into bearing bores or bolt holes in machined surfaces.

Holes smaller than 1/4 inch diameter, such as sand holes or casting porosity can be repaired using Metallic Plastic Repair Kit, Part No. C6AZ-19554-A as directed below.

Holes larger than 1/4 inch can be repairedd by drilling, tapping and plugging.

The recommended procedure for using the Metallic Plastic Repair Kit is as follows:

Steam clean the transmission or transfer unit case to remove grease, oil, or road dirt. Clean the repair area thoroughly. Metallic plastic will not

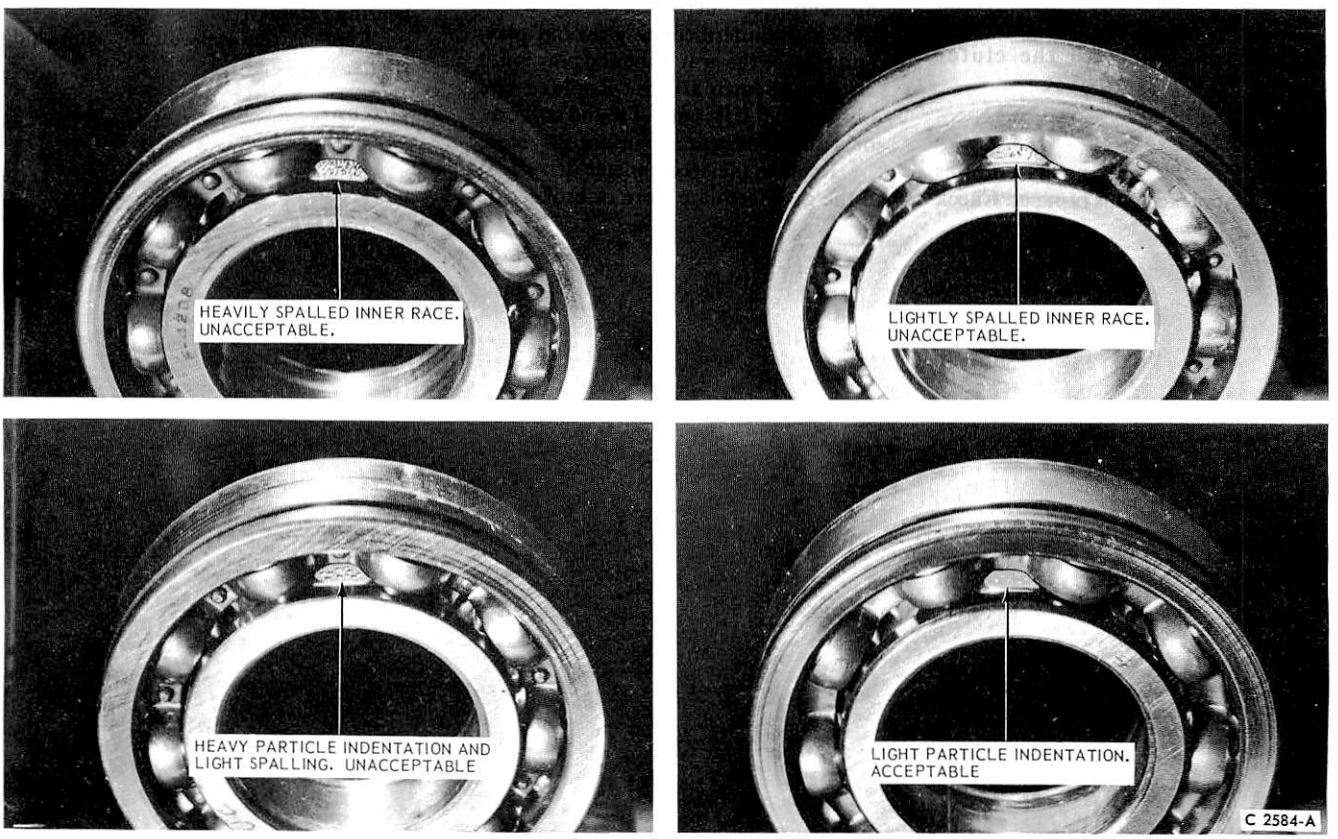

FIG. 9 Ball Bearing Inspection

stick to a dirty or oily surface.

1. Prepare the surface to be repaired by grinding or rotary filing to a clean bright metal surface. Chamfer or undercut the hole or porous area to a greater depth than the rest of the cleaned surface. Solid metal must surround the hole.
2. Mix the metallic plastic base and hardener as directed on the container. Stir thoroughly until uniform.
3. Apply the repair mixture with a suitable clean tool (putty knife, wood spoon, etc.), forcing the epoxy into the hole or porosity.
4. Allow the repair mixture to harden. This can be accomplished by two methods -heat cure with a 250 watt lamp placed 10 inches from the repaired surface, or air dry for 10-12 hours at temperatures above 50 degrees F.
5. Sand or grind the repaired area to blend with the general contour of the surrounding surface.

Do not use this method to repair casting cracks.

Inspect the extension housing seal and bushing or the bearing retainer oil seal. Replace the seal.

Inspect the front face of the case, and file or grind off any minor nicks or burrs that could cause misalignment of the transmission with the clutch housing.

BEARINGS

Examine the bearing assemblies (Fig. 9) for cracked cups or races. Check the races for roughness. Inspect the balls and rollers for looseness, wear, chipping, flaking or other damage. Check the bearings for binding on the shafts or looseness in the bores. If any of these conditions are present, replace the bearings.

COUNTERSHAFT GEAR AND COUNTERSHAFT

Replace the countershaft gear if the teeth are chipped or excessively worn. Replace the countershaft if the shaft is bent or grooved.

REVERSE IDLER GEAR

Replace the reverse idler gear if the gear or bushing is badly worn or if the teeth are chipped or burred. Replace the reverse idler gear shaft if it is excessively worn or scored.

INPUT SHAFT

Replace the input shaft if it is worn, bent, twisted, or if the gear has chipped, worn, or missing teeth, or if the cone surface is damaged. If the pilot bearing bore is scored, replace the gear and gear rollers.

OUTPUT SHAFT

Replace all output shaft gears that are chipped, burred, or badly worn. Check the intermediate gear end play, and replace the gear if the end play is not within specifications. Replace the output shaft if it is out of round or worn, or if the pilot bearing surface is scored.

Replace the speedometer drive gear if the gear teeth are worn or broken. Be sure to install the correct replacement gear.

THRUST WASHERS, SYNCHRONIZER DISCS, BEARING COVERS

Check the surfaces of all thrust washers. Washers scored and/or reduced in thickness should be replaced.

Synchronizer discs scored, burned, or warped should be replaced. Bearing covers grooved or showing wear from the thrust or adjacent bearings should be replaced. Check the oil return threads in the bearing covers. If the sealing action of the threads has been destroyed by contact from the input and output shafts, replace the covers.

SYNCHRONIZER BLOCKING RINGS

Inspect the synchronizer blocking rings for widened index slots, rounded clutch teeth and smooth internal surfaces (must have machined grooves). With the blocker ring on the cone, the distance between the face of the gear must not be less than 0.010 inches.

Check the synchronizer sleeves for free movement on their hubs. Make sure the alignment marks (etched marks) are properly indexed.

Replace the seal in the input shaft bearing retainer.

Replace the seals on the cam and shafts.

SPECIAL SERVICE TOOLS

GENERAL TORQUE SPECIFICATIONS

Unless otherwise specified, the following torque ranges are to be used for fitting or fastener diameters as indicated.			
Bolt or Nut Diameter	**Torque Range**	**Bolt or Nut Diameter**	**Torque Range**
1/4"	85–115 IN-LBS	9/16"	110–150 FT-LBS
5/16"	12–17 FT-LBS	5/8"	150–205 FT-LBS
3/8"	31–42 FT-LBS	3/4"	220–300 FT-LBS
7/16"	50–70 FT-LBS	7/8"	360–480 FT-LBS
1/2"	75–105 FT-LBS	1.0"	540–730 FT-LBS
Above Torque Specifications apply to both Fine and Coarse Threads.			

SPECIAL SERVICE TOOLS

Tool Number	Description	Tool Number	Description
680-4, CJ85	Remover–Countershaft Rear Bearing	Tool-1175AB	Grease Seal Remover
T50T-100-A	Impact Hammer–Long	T52L-7000-GAE	Extension Housing Bushing and Seal Removal
T59L-100-B	Impact Hammer–Short	T64P-7025-B	Output Shaft Bearing Remover and
T53L-200-A	Handle Adapter–Female ½–13		Replacer
T57L-600-A	Driver	Tool-7025-B	Rear Main Shaft Bearing Remover
OTC625-3		Tool-7025-G	Main Shaft Bearing Remover and
1003,952	Auxiliary Countershaft Rear Bearing Remover		Replacer
OTC 515	Gear and Pulley Puller	T64P-7111-A	Cluster Gear Roller Retainer Shaft
T58L-701-A	Shift Rail Remover	T63P-7111-A	Cluster Gear Roller Retainer Shaft
625-2, 952		T64P-7140-A	Reverse Idler Shaft Remover
1002-L	Countershaft Rear Bearing Puller	T61L-7657-A	Transmission Extension Housing Oil
OTC 943	Bearing Cup Pulling Attachment		Seal Replacer
CJ 950	Pulling Attachment	T57P-7697-B	Extension Housing Bushing
P61, 951A, 930B			Replacer
938	Input Shaft Rear Bearing Inner Race Remover	T57P-7657-G	Extension Housing Bushing
943-10, 930-B,			Replacer
P61, 938, 1012A	Output Shaft Remover	T67P-7341-A	Shift Linkage Grommet
625, 1013A	Input Shaft Bearing Retainer Remover		Replacer
T53T-1175-B	Output Shaft Rear Oil Seal Replacer	Tool-3583-J	Input Shaft Seal Installer
T53T-1239-A6	Front Bearing Race Replacer	T58L-101-A (Use	
T57L-4220-A4	Input Shaft Remover	with T50T-100-A)	Input Shaft Seal Remover
T53T-4242-F	Output Input Shaft Bearing Replacer	T61T-7111-A	Countershaft Remover
T57L-4621-A,		T53T-4629-A	Output Shaft Bearing Remover
T53T-4621B	Mainshaft Bearing Replacer	T60K-7697-A	Extension Housing Bushing and Seal
T53T-4676-B	Drive Pinion Oil Seal Replacer		Remover
T57T-4851-B	Companion Flange Holder	T65T-7000-B	Input Shaft End Play Support
T64T-7000-A	Input Shaft End Play Support	Tool-7000-DE	Air Nozzle
T7025-H	Main Shaft Bearing Remover	T52L-7000-HAE	Extension Housing Rear Bearing
T63P-7025-A	Output Shaft Bearing Replacer		Replacer
T64T-7025-A	Input Shaft Bearing Puller Adapter	Tool-7025-C	Output Shaft Bearing Remover
T53T-7065-A	Main Shaft Rear Bearing Remover	T64T-7050-A	Input Shaft Oil Seal Replacer
T53T-7065-B	(4) Speed Transmission Main Drive Gear Bearing and (5)	T57T-7140-A	Reverse Idler Shaft Puller
	Speed Transmission Main Drive Shaft Bearing Replacer	T58T-7140-A	
T57L-7111	Cluster Gear Roller Retainer Shaft	T54T-4625-BA	Pinion Pilot Bearing Remover
T50T-7140-B	Reverse Idler Shaft Remover	T65T-4813-A	Output Shaft Seal Replacer
		T73T-7220-A	Gear Shift Lever Remover and Installer

CC1037-C

PART 16-11 Ford 3.03 Three-Speed Transmission

Applies To Bronco, Econoline and F100-250 Trucks

COMPONENT INDEX	Page
GEAR SHIFT LINKAGE ADJUSTMENT	
Bronco	11-02
Econoline	11-02
F100, 250	11-02
GEAR SHIFT TUBE	
Installation	11-04
Removal	11-04
PARTS REPAIR OR REPLACEMENT	
Countershaft Gear Bearings	11-13
Input Shaft Bearing	11-12
Shift Levers and Seals	11-12
Synchronizers	11-12

COMPONENT INDEX	Page
SPECIFICATIONS	11-16
TRANSMISSION ASSEMBLY	
Assembly	11-11
Description	11-01
Disassembly	11-10
Installation	
Bronco	11-08
Econoline	11-07
F100, 250	11-06
Removal	
Bronco	11-07
Econoline	11-06
F100, 250	11-05

DESCRIPTION

TRANSMISSION

The 3.03 three-speed transmission (Fig. 1) is available in the F-100-250-Series, Econoline and Bronco vehicles.

A transmission service identification tag is located on the right front side of the case (Fig. 2). The tag will show the transmission model and service identification code (when required). The second line will show the transmission serial number.

The transmission is of the fully synchronized type with all gears except the reverse gear and sleeve being in constant mesh. All forward speed changes are accomplished with synchronizer sleeves. The synchronizers permit quicker shifts, greatly reduce gear clash and permit down-shifting from high to intermediate between 40-15 mph and from intermediate to low below 20 mph.

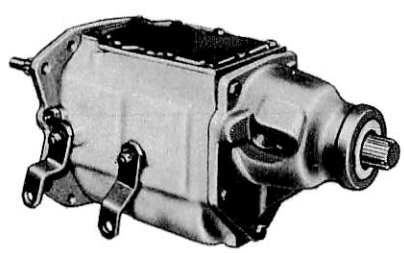

C1838-B

FIG. 1 Three-Speed Transmission (Short Extension Housing)

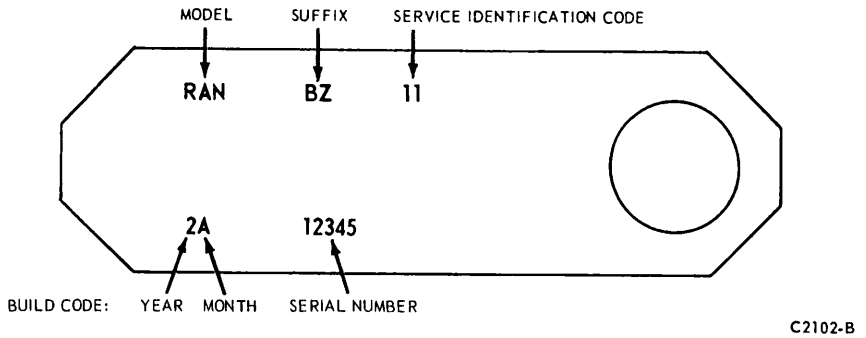

FIG. 2 Transmission Identification Tag

ADJUSTMENTS

GEAR SHIFT LINKAGE

F-100-250

Refer to Figure 4 for adjustment instructions.

BRONCO

Refer to Figure 5 for adjustment instructions.

ECONOLINE

Refer to Figures 3 and 6 for adjustment instructions.

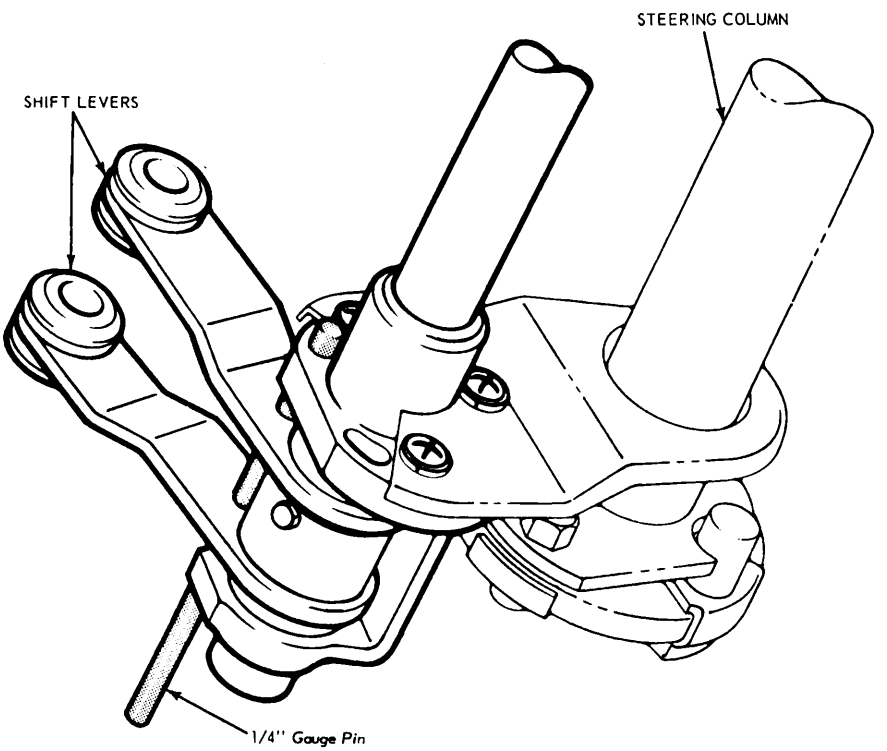

FIG. 3 Gauge Pin Installation—Econoline

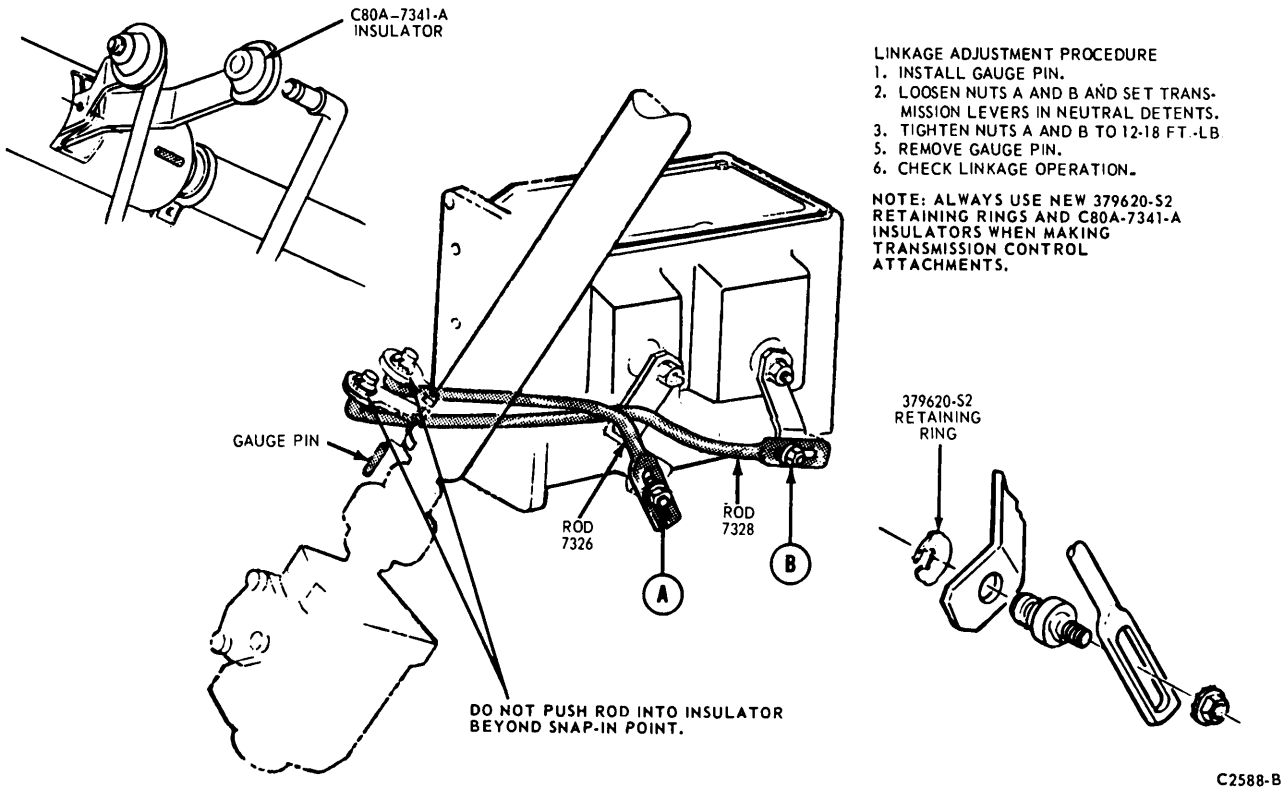

FIG. 4 Gearshift Linkage Adjustment—F-100-250

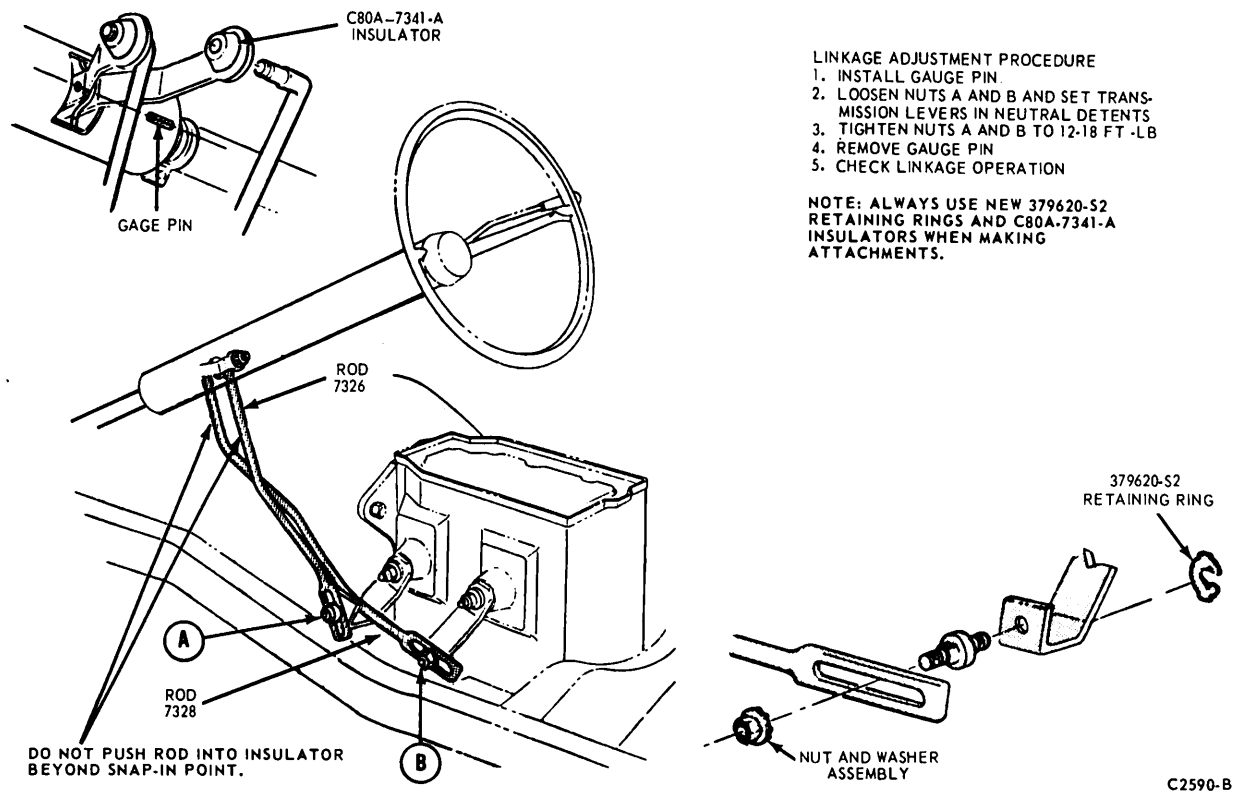

FIG. 5 Gearshift Linkage Adjustment—Bronco

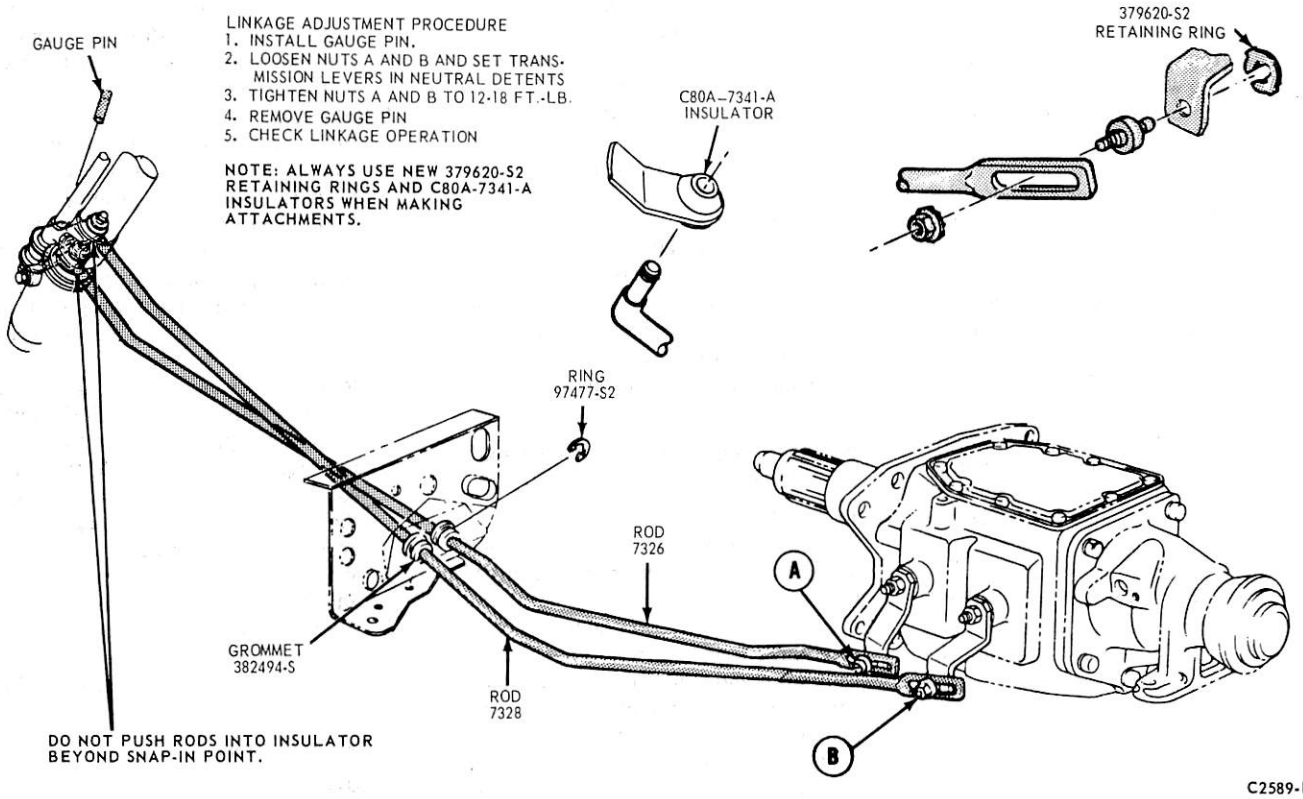

FIG. 6 Gearshift Linkage Adjustment—Econoline

REMOVAL AND INSTALLATION

GEAR SHIFT TUBE

ECONOLINE

Removal

1. Disconnect the horn and turn signal wires. Remove the steering wheel.
2. Fold the floor mat back, remove the steering column floor cover retaining screws, the steering column floor cover and position the rubber weather seal out of the way.
3. Remove the selector lever roll pin and disconnect the selector lever at the lever socket.
4. Working under the hood, remove the windshield washer reservoir to gain access to the shift levers.
5. Remove the shift rod metal retainers from the shift rods. Remove the shift rods from the shift levers.
6. Working inside the vehicle, remove the three bolts retaining the shift lever bracket to the steering column lower bracket (Fig. 7). Lift the shift tube clear of the steering column.
7. Remove the clamp bolt and five attaching bolts from the steering column lever retainer and remove the retainer from the column. Loosen the steering column-to-instrument panel clamp attaching bolts.
8. Remove the snap ring from he steering shaft upper bearing.
9. Pull the steering column up just enough to disengage the shift tube at the upper end of the column. Lift the shift tube out of the vehicle.
10. Remove the lock screw from the shift tube and align the slot in the cross-over sleeve with the cross-over pin.
11. Remove the cross-over pin from the shift lever retaining bracket and slide the shift tube out of the bracket.
12. Remove the cross-over sleeve, shift levers, spring washer and bushings from the shift lever retaining bracket (Fig. 8).

Installation

1. Insert bushing into the upper portion of the shift lever retaining bracket (shift lever side).
2. Assemble the two shift levers, cross-over sleeve, two bushings and spring washer as a sub-assembly (Fig. 8).
3. Position sub-assembly in the shift lever retaining bracket. Insert shift tube through shift lever retaining bracket and the sub-assembled

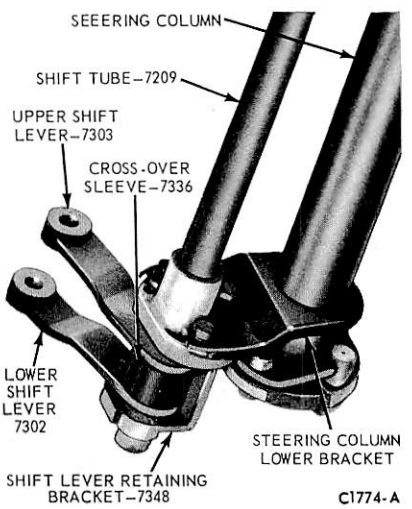

FIG. 7 Shift Tube and Levers—Econoline

parts, positioning spring washer from inside shift lever bracket hole.
4. Align the cross-over pin hole in the shift tube with the hole in the cross-over sleeve and the notches in the shift levers. Insert the cross-over pin.
5. Rotate the cross-over sleeve so that the lock screw hole in the shift tube is aligned with the notch in the cross-over sleeve. Insert the lock screw into hole and tighten. This will keep the cross-over pin in position.
6. Position the shift tube on the steering column. Lift the column up just enough to fit the shift tube into its seat in the column upper flange. Slide the column back into position and install the snap ring (bevel side up) on the steering shaft upper bearing.
7. Position the lower end of the tube in the steering column lower bracket. Install the three bolts attaching the shift lever retaining bracket to the steering column lower bracket.
8. Position the rubber weather seal and the steering column lower retainer on the floor pan and install the clamp bolts and the five retaining bolts. Do not tighten the retaining bolts at this time.
9. Check for free rotation of the steering shaft. Torque the steering column lower retaining attaching bolts to specification. Tighten the steering column-to-instrument panel clamp attaching bolts.
10. Connect the shift rods to the shift levers.
11. Install the windshield washer reservoir.
12. Position the selector lever in its socket and install the roll pin.
13. Install the steering wheel and connect the horn and turn signal wires. Check the operation of the horn and turn signals.
14. Adjust the shift linkage as outlined in this section.

COLUMN-MOUNTED SHIFT LINKAGE GROMMET

Removal

The column-mounted shift lever assembly incorporates an oil impregnated plastic grommet in the end of each lever arm. A special tool (Fig. 9) is required to install the grommet in the shift lever, and to install the shift linkage rod into the grommet. Remove and install the grommet as follows:

1. Place the lower jaw of the tool between the shift lever and the shift rod. Position the stop pin against the end of the shift rod (Fig. 9) and force the rod out of the grommet. Remove the grommet from the shift lever by cutting off the large shoulder with a sharp knife. **The grommet must be removed from the shift lever and a new one installed each time the rod is disconnected.**

Installation

1. Before installing a new grommet, adjust the stop pin as necessary to properly install the grommet and coat the outside of the grommet with lubricant. Then, place the grommet on the stop pin and force it into the shift lever hole. Turn the grommet several times to be sure it is properly seated.
2. Readjust the stop pin to a length which is sufficient to install the shift rod into the grommet (Fig. 9). If the pin height is not adjusted, the shift rod may be pushed too far through the grommet, causing damage to the grommet retaining lip.
3. With the pin height properly adjusted, position the shift rod on the tool and force the rod into the grommet until the groove in the rod seats on the inner retaining lip of the grommet.

TRANSMISSION

F-100-250

Removal

1. Raise the vehicle and position safety stands. Support the engine with a jack and wood block placed under the oil pan.

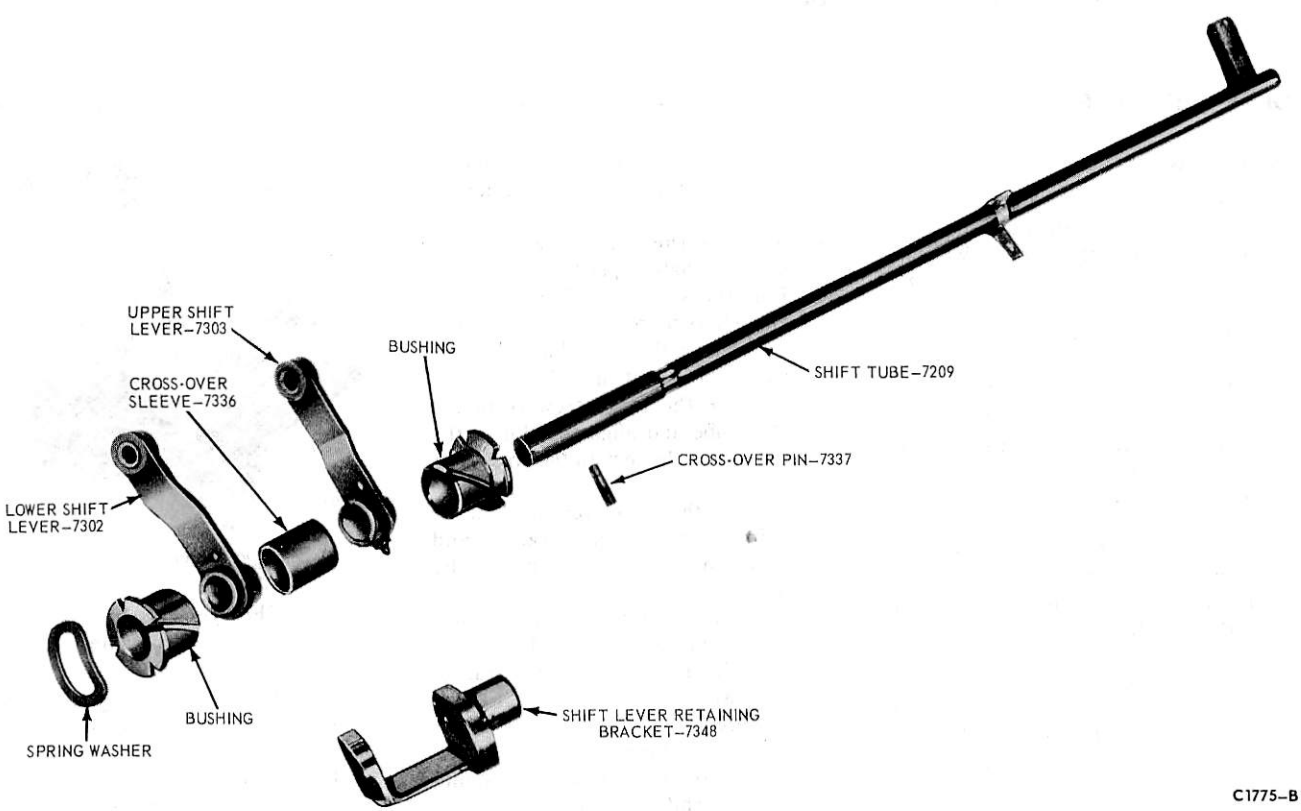

FIG. 8 Shift Levers Disassembled Econoline

2. Drain the transmission lubricant by removing the lower extension housing-to-transmission bolt.
3. Position a transmission jack under the transmission.
4. Disconnect the gear shift linkage at the transmission.
5. If the vehicle has a four-wheel drive, remove the transfer case shift lever bracket from the transmission.
6. Disconnect the speedometer cable.
7. Disconnect the T.R.S. switch wire if so equipped.
8. Disconnect the drive shaft from the transmission as detailed in Group 15.
9. Raise the transmission if necessary and remove the rear support (Figs. 10 and 11).
10. Remove the transmission-to-clutch housing attaching bolts.
11. Move the transmission to the rear until the input shaft clears the clutch housing and lower the transmission.

Do not depress the clutch pedal while the transmission is removed.

Installation

Before installing the transmission, apply a light film of lubricant (C1AZ-19590-B) to the release bearing inner hub surfaces, release lever fulcrum and fork and the transmission front bearing retainer. Exercise care to avoid contaminating the clutch disc with excessive grease.

1. Place the transmission on a transmission jack. Raise the transmission until the input shaft splines are in line with the clutch disc splines. The clutch release bearing and hub must be properly positioned in the release lever fork.
2. Install a guide stud in each lower clutch housing-to-transmission case mounting bolt and align the splines on the input shaft with the splines on the clutch disc.
3. Slide the transmission forward on the guide studs until it contacts the clutch housing.
4. Install the two transmission to flywheel housing upper mounting bolts and nuts. Remove the two guide studs and install the lower mounting bolts. Torque the four mounting bolts to specifications. Install the rear support and torque the attaching bolts and nuts to specifications (Figs. 10 and 11). Remove the transmission jack and engine jack.
5. Connect the speedometer cable and the driven gear.
6. Connect the T.R.S. switch wire if so equipped.
7. Install the drive shaft as detailed in Group 15.
8. Connect each shift rod to its respective lever on the transmission.
9. If the vehicle is equipped with four-wheel drive, install the four wheel drive shaft bracket and torque the bolts to specifications.
10. Fill the transmission to the proper level with an approved lubricant.
11. Adjust the clutch pedal free travel and shift linkage as required.

ECONOLINE

Removal

1. Raise the vehicle on a hoist and drain the lubricant from the transmission by removing the lower extension housing-to-transmission bolt.
2. Disconnect the drive shaft from the flange at the transmission. Secure the front end of the drive shaft out of the way with lock wire.
3. Disconnect the speedometer cable from the extension housing and disconnect the gear shift rods from the transmission shift levers.
4. Disconnect the T.R.S. switch wire if so equipped.
5. Position a transmission jack under the transmission. Secure the transmission to the jack.
6. Raise the transmission slightly and remove the four bolts retaining the transmission support crossmember to the frame side rails. Remove the bolt retaining the transmission extension housing to the crossmember.

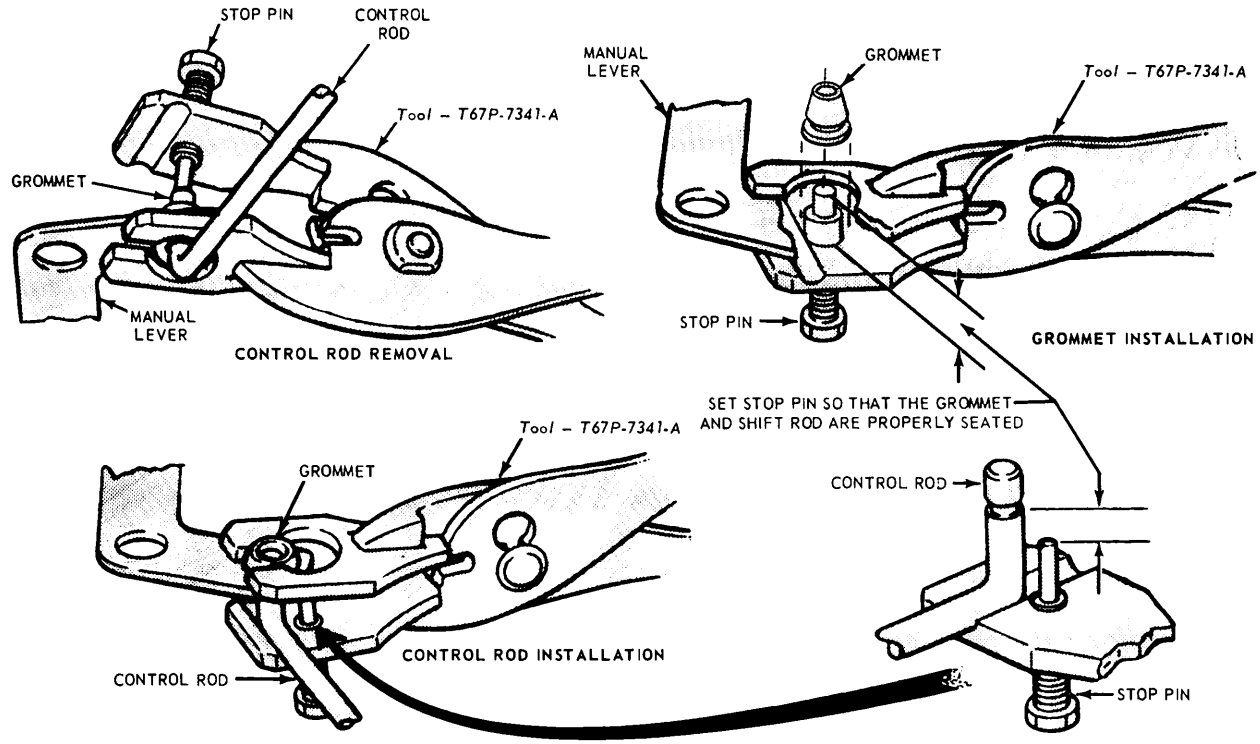

C 2090-A

FIG. 9 Removing or Installing Shift Linkage Grommet

7. Remove the four transmission-to-flywheel housing bolts.
8. Position engine support bar (Tool T65E-6000-J) to the frame (Fig. 12).
9. Lower the transmission.

Installation

1. Make certain that the machined surfaces of the transmission case and the flywheel housing are free of dirt, paint and burrs.
2. Install a guide pin in each lower mounting bolt hole.
3. Start the input shaft through the release bearing. Align the splines on the input shaft with the splines in the clutch disc. Move the transmission forward on the guide pins until the input shaft pilot enters the bearing or bushing in the crankshaft. If the transmission front bearing retainer binds up on the clutch release bearing hub, work the release bearing lever until the hub slides onto the transmission front bearing retainer. Install the two transmission-to-flywheel housing upper mounting bolts and lock washers. Remove the two guide pins and install the lower mounting bolts and lock washers. Torque the four mounting bolts to specifications.
4. Raise the jack slightly and remove the engine support bar.
5. Position the support crossmember on the frame side rails and install the retaining bolts. Install the extension housing-to-crossmember retaining bolt. Torque all retaining bolts to specification.
6. Connect the gear shift rods and the speedometer cable.
7. Connect the T.R.S. switch if so equipped.
8. Install the drive shaft and torque the attaching bolts to specification.
9. Fill the transmission to the bottom of the filler hole with the recommended lubricant.
10. Adjust the clutch pedal free travel and shift linkage as required.

BRONCO

Removal

1. Shift the transfer case into neutral.
2. Remove the bolts attaching the fan shroud to the radiator support.
3. Raise the vehicle on a hoist.
4. Support the transfer case shield with a jack and remove the bolts that attach the shield to the frame side rails. Remove the shield.
5. Drain the transmission and transfer case lubricant. To drain the transmission lubricant, remove the lower extension housing-to-transmission bolt.

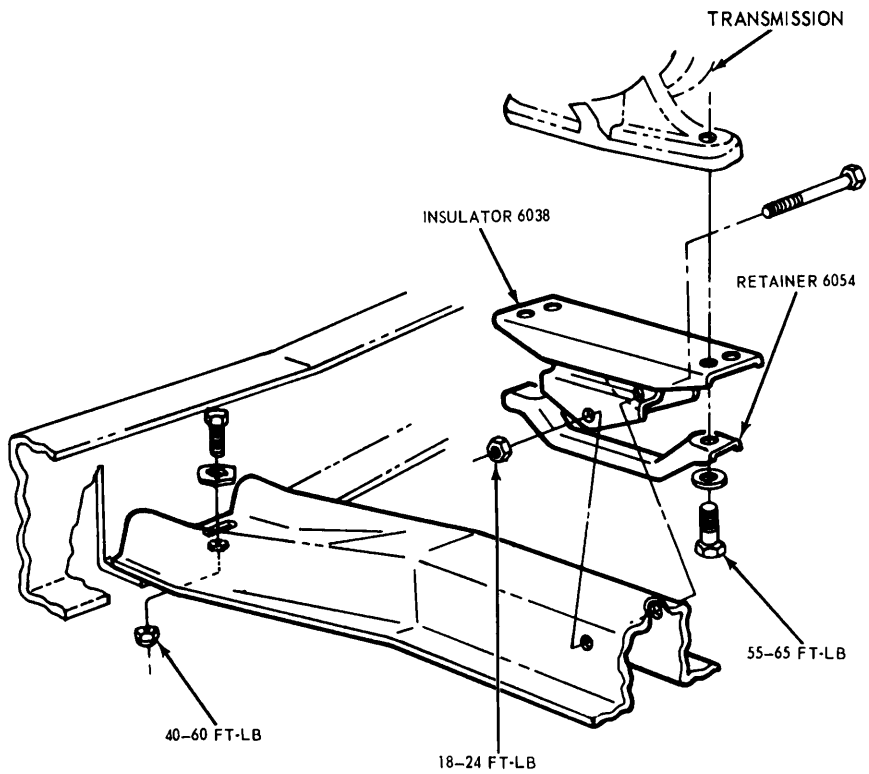

FIG. 10 Removing and Installing Crossmember-F-100-250

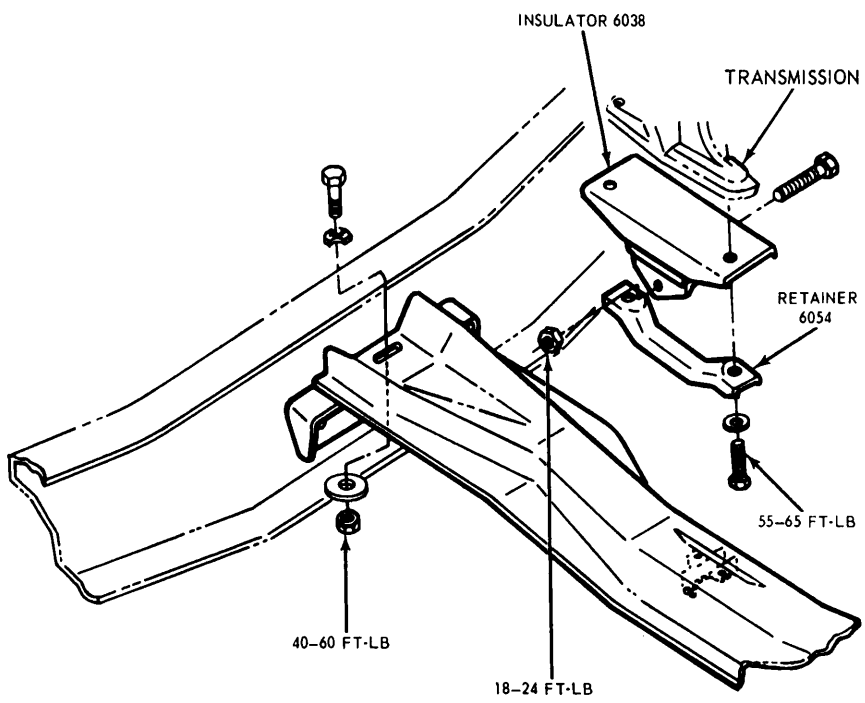

FIG. 11 Removing and Installing Crossmember—F-250 W/140" W.B.

6. Disconnect the front and rear drive shafts at the transfer case. (Fig. 13).
7. Disconnect the speedometer cable at the transfer case.
8. Disconnect the T.R.S. switch if so equipped.
9. Disconnect the shift rods from the transmission. shift levers. Place the first-reverse gear shift lever into the first gear position and insert the fabricated tool (Fig. 14). This tool will prevent the input shaft roller bearings from dropping into the transmission case when separating the transfer case from the transmission and output shaft.
10. Support the engine with a jack.
11. Remove two cotter pins, bolts, washers, plate and insulators that secure the crossmember to the transfer case adapter.
12. Remove the crossmember-to-frame side support attaching bolts.
13. Position a transmission jack under the transfer case. Raise the transmission and transfer case and remove the upper insulators from the crossmember. Remove the crossmember.
14. Roll back the boot enclosing the transfer case shift linkage. Remove the threaded cap holding the shift lever assembly to the shift bracket. Remove the shift lever assembly.
15. Remove the two lower bolts attaching the transmission to the flywheel housing.
16. Reposition the transmission jack under the transmission and secure with the chain.
17. Remove the two upper bolts securing the transmission to the flywheel housing. Move the transmission and transfer case rearward and downward out of the vehicle.
18. Move the assembly to a bench and remove the transfer case-to-transmission attaching bolts.
19. Slide the transmission assembly off the transfer case.

Installation

1. Position transfer case to transmission, apply C9AZ-19554-A sealer to bolt threads and install attaching bolts. Torque bolts to specifications.
2. Position the transmission and transfer case on a transmission jack and secure with the safety chain.
3. Raise the transmission and transfer case assembly into position and install the transmission case to the flywheel housing.
4. Install the two upper and two lower transmission attaching bolts and torque to specifications.
5. Position the transfer case shift lever and install the threaded cap to the shift bracket. Reposition the rubber boot.
6. Raise the transmission and transfer case high enough to provide clearance for installing the crossmember. Position the upper insulators to the crossmember and install the crossmember-to-frame side support attaching bolts. Torque to specifications (Fig. 13).
7. Align the bolt holes in the transfer case adapter with those in the crossmember, then lower the transmission and remove the jack.
8. Install the crossmember-to-transfer case adapter bolts, nuts, insulators, plates and washers. Torque the nuts to specifications (Fig. 13). Secure the nuts with cotter pins.
9. Remove the engine jack.
10. Remove the fabricated tool and connect each shift rod to its respective lever on the transmission. Refer to Part 16-11 for rod adjustment instructions.
11. Connect the speedometer cable.

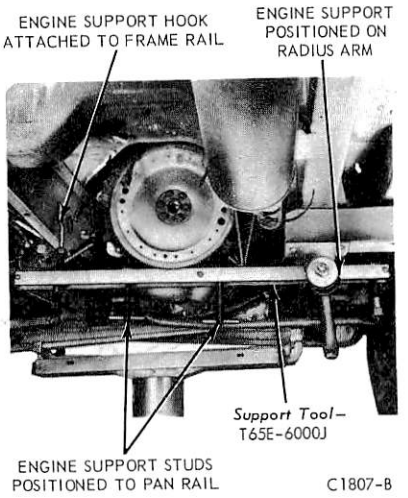

FIG. 12 Installing Engine Support Bar—Econoline

12. Connect the T.R.S. switch if so equipped.
13. Install the rear axle drive shaft to the transfer case. Torque the attaching bolts to specifications (Fig. 13).
14. Install the front wheel drive shaft to the transfer case. Torque the attaching bolts to specifications (Fig. 13).
15. Fill the transmission and transfer case to the bottom of the filler hole with the recommended lubricant.
16. Position the transfer case shield to the frame side rails and install the attaching bolts.
17. Lower the vehicle.
18. Install the fan shroud.
19. Check transfer case operation.

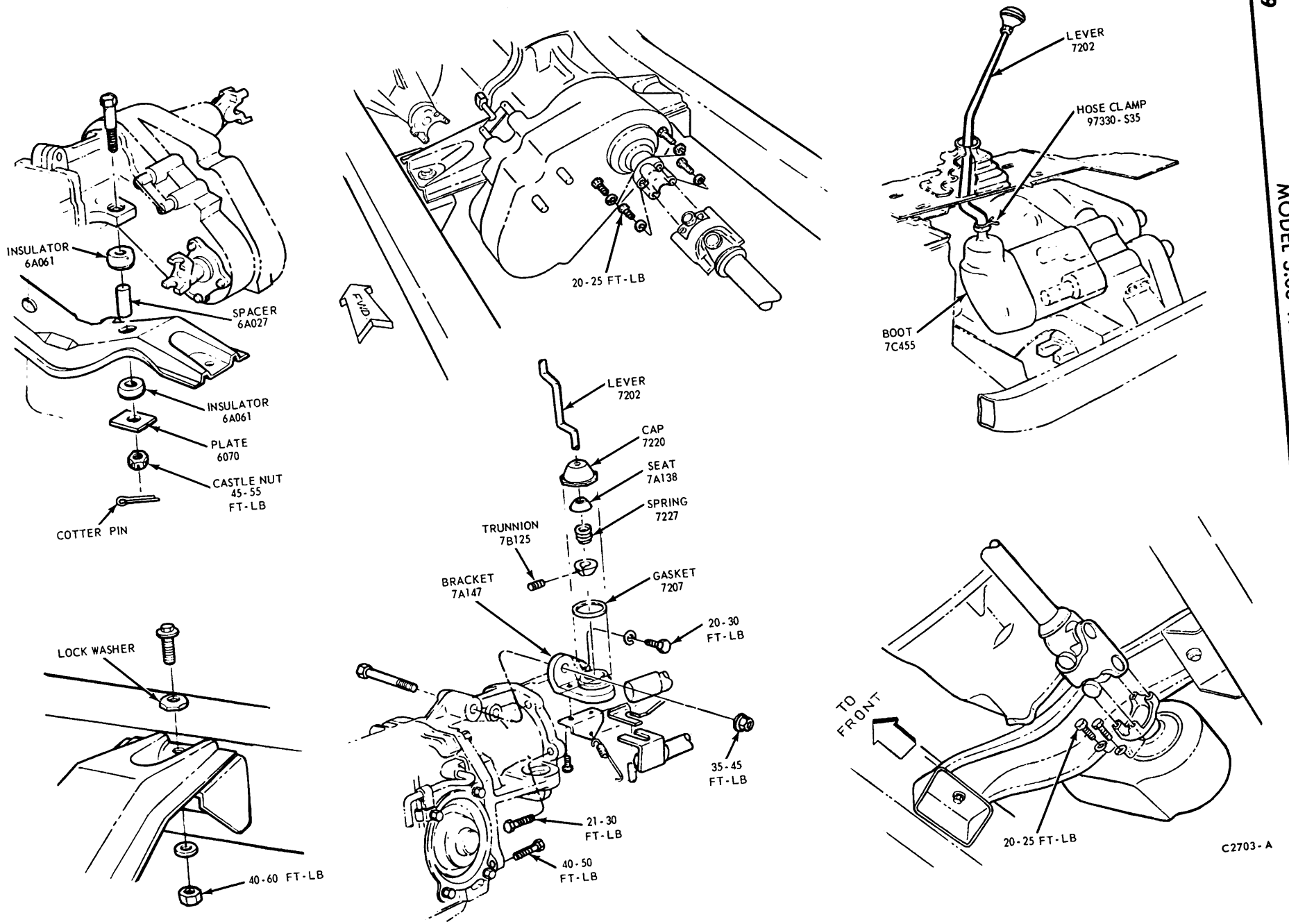

FIG. 13 Transfer Case Installation

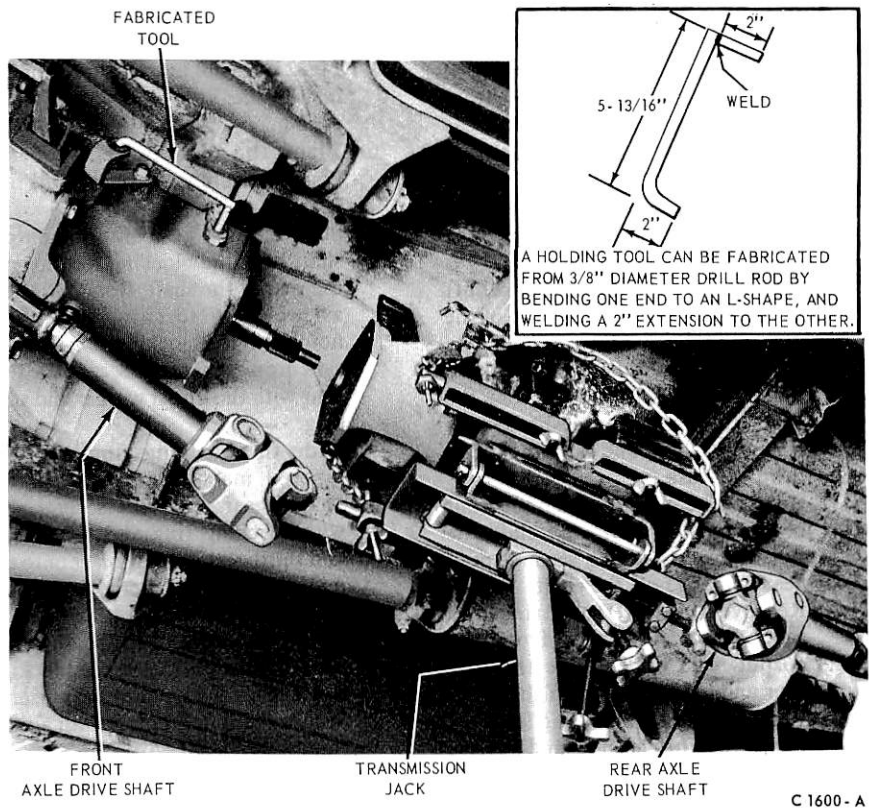

FIG. 14 Removing or Installing Transfer Case—Bronco-Manual Transmission

DISASSEMBLY AND ASSEMBLY

TRANSMISSION

Disassembly

1. Mount the transmission in a holding fixture and drain the lubricant by removing the lower extension housing bolt.
2. Remove the capscrews that attach the cover to the case. Remove the cover and the gasket (Fig. 11) from the case.
3. Remove a long spring that retains the detent plug in the case (Fig. 20). Remove the detent plug with a small magnet.
4. Remove the capscrews and lock washers that attach the extension housing to the case. Remove extension and gasket from the case.
5. Remove the capscrews and lock washers that attach the front bearing retainer to the case. Remove the front bearing retainer and gasket from the case.
6. Remove the lubricant filler plug from the right side of the case. Working through the plug opening, drive the roll pin out of the case and countershaft with 1/4 inch punch (Fig. 16).
7. Hold the countershaft gear with a hook and with the tool shown in Fig 17 push the countershaft out the rear of the case.

The countershaft (cluster) gear and thrust washers (Fig. 13) can now be lowered to the bottom of the case.

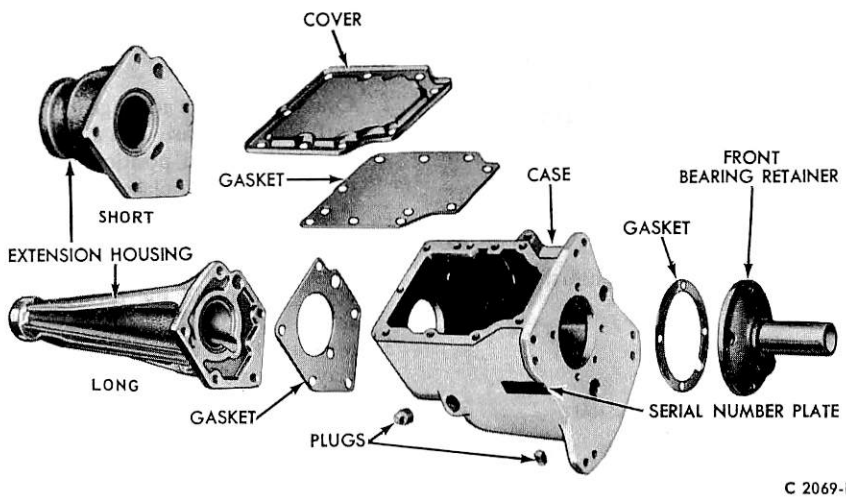

FIG. 15 Transmission Case and Related Parts

Remove the countershaft from the rear of the case.

8. Remove the snap ring that secures the speedometer drive gear on the output shaft. Slide the speedometer drive gear off the shaft. Remove the speedometer drive gear lock ball from the shaft.
9. Remove the snap ring that retains the output shaft bearing on the shaft. Remove the bearing from the case and shaft as shown in Fig. 18.
10. Place both shift levers in the neutral (center) position.
11. Remove the set screw that secures the first and reverse shift fork to the shift rail. Slide the first and reverse shift rail out through the rear of the case.
12. Slide the first and reverse synchronizer forward as far as possible, and rotate the first and reverse shift fork upward. Then lift it from the case.
13. Move the second and third-speed shift fork to the second-speed position to gain access to the set screw. Remove the set screw from the fork. Rotate the shift rail 90 degrees as shown in Fig. 19.
14. Lift the interlock plug (Fig. 20) from the case with a magnet.
15. Tap on the inner end of the second and third-speed shift rail to remove the expansion plug (Fig. 20) from the front of the case. Remove the shift rail.
16. Remove the second and third-speed shift rail detent plug and spring from the detent bore.
17. Pull the input gear and shaft from the case.
18. Rotate the second and third-speed shift fork upward, and lift it from the case.
19. Carefully lift the output shaft assembly out through the top of the case.
20. Lift the reverse idler gear and two thrust washers (Fig. 21) from the case. Lift the countershaft gear, thrust washer, and dummy shaft from the case.
21. Remove the snap ring from the front of the output shaft, and slide the synchronizer and the second-speed gear (Fig. 22) off the shaft.
22. Remove the next snap ring and tabbed thrust washer from the output shaft. Then slide the first gear and blocking ring off the shaft.
23. Remove the next snap ring from the output shaft. The first and reverse synchronizer hub is a press fit on the output shaft. To eliminate the possibility of damaging the synchronizer assembly, remove the synchronizer hub using an Arbor Press as shown in Fig. 23. **Do not attempt to remove or install the hub by hammering or prying.**
24. **Do not remove the T.R.S. switch from the case, if so equipped, unless the switch is damaged. Removal of the switch will damage the plastic sealing tape.**

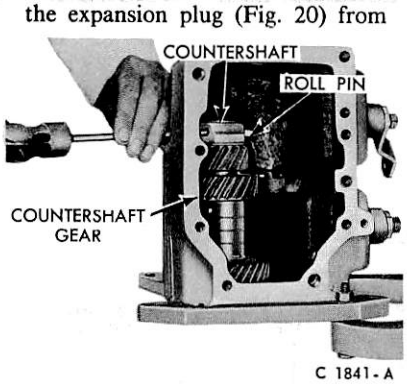

FIG. 16 Removing Countershaft Roll Pin

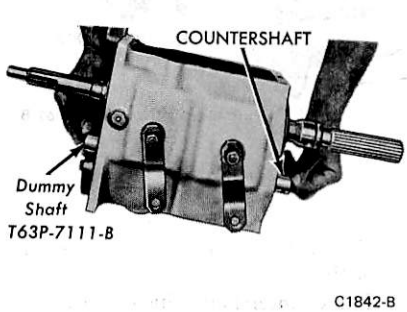

FIG. 17 Removing Countershaft

Assembly

1. Coat the reverse idler gear thrust surfaces in the case with a thin film of lubricant and position the two thrust washers in place.
2. Position the reverse idler gear and shaft in place. Align the gear bore and thrust washers with the case bores and install the reverse idler shaft.
3. Measure the reverse idler gear end play with a feeler gauge. End play should be within specification. If the end play is not within specification, replace the thrust washers. If the end play is within limits, leave the reverse idler gear installed.
4. Lubricate the output shaft splines and machined surfaces with transmission lubricant.
5. The first and reverse synchronizer hub is a press fit on the output shaft. To eliminate the possibility of damaging the synchronizer assembly, install the synchronizer hub with the teeth end of the gear facing toward the rear of the shaft, using an Arbor Press as shown in Fig. 23. **Do not attempt to remove or install the hub by hammering or prying.**
6. Place the blocking ring on the tapered machined surface of the first gear.
7. Slide the first gear onto the output shaft with the blocking ring toward the rear of the shaft. Rotate the gear as necessary to engage the three notches in the blocking ring with the synchronizer inserts. Secure the first gear with the thrust washer and snap ring.
8. Slide the blocking ring onto the tapered machined surface of the second gear. Slide the second gear with blocking ring and the second and third gear synchronizer onto the mainshaft. The tapered machined surface of the second gear must be toward the front of the shaft. Make sure that the notches in the blocking ring engage the synchronizer inserts. Secure the synchronizer with a snap ring.
9. Coat the bore of the input shaft and gear with a **thin** film of grease. **A thick film of grease will plug the lubricant holes and prevent lubrication to the bearings.** Install the 15 bearings (Fig. 26) in the bore.
10. Install the input shaft through the front of the transmission. Install the snap ring in the bearing groove.
11. Position the output shaft assembly in the case. Position the second and third-speed shift fork on the second and third-speed synchronizer.
12. Place a detent plug spring and a plug in the case (Fig. 20). Place the second and third-speed synchronizer in the second-speed position (toward rear of transmission). Align the fork and install the second and third-speed shift rail. It will be necessary to depress the detent plug to enter the rail in the bore. Move the rail inward until the detent plug engages the forward notch (second-speed position).
13. Secure the fork to the shaft with the set screw. Move the synchronizer to the neutral position.
14. Install the interlock plug in the case. If the second and third-speed shift rail is in the neutral position, the top of the interlock will be slightly lower than the surface of the first and reverse shift rail bore.
15. Move the first and reverse synchronizer forward to the first-speed position. Place the first and reverse shift fork in the groove of the first and reverse synchronizer.

Rotate the fork into position and install the first and reverse shift rail. Move the rail inward until the center notch (neutral) is aligned with the detent bore. Secure the fork to the shaft with the set screw.

16. Install a new shift rail expansion plug in the front of the case.
17. Hold the input shaft and blocking ring in position. Then move the output shaft forward to seat the pilot in the roller bearings of the input gear.
18. Tap the input gear bearing into place in the case while holding the output shaft to prevent the roller bearings from dropping. Install the front bearing retainer and new gasket making sure that the oil return slot is at the bottom of the case. Install and torque the attaching screws to specification.
19. Install the large snap ring on the rear bearing. Place the bearing on the output shaft with the snap ring end toward the rear of the shaft. Press the bearing into place with the tool shown in Fig. 20. Secure the bearing to the shaft with a snap ring.
20. Hold the speedometer drive gear lock ball in the detent and slide the speedometer drive gear into place. Secure the gear with a snap ring.
21. Place the transmission in the vertical position. Working through the drain hole in the bottom of the case, align the bore of the countershaft gear and the thrust washers with the bore of the case with a screwdriver.
22. Working from the rear of the case, push the dummy shaft out of the countershaft gear with the countershaft. Before the countershaft is completely inserted in the bore, make sure that the hole that accommodates the roll pin is aligned with the hole in the case. Drive the shaft into place and install the roll pin.
23. Coat a new extension housing gasket with sealer and position it on the case.
24. Install lock washers on the five attaching screws. Dip the threads of the capscrews in the sealer. Secure the housing to the case and torque the capscrews to specification.
25. Place the transmission in gear. Pour lubricant over the entire gear train while rotating the input or output shaft.
26. Install the remaining detent plug in the case. Install the long spring (which is retained by the case) to secure the detent plug. Install a new T.R.S. switch, if required. Torque the switch to specifications.
27. Coat a new cover gasket (Fig. 15) with sealer. Secure the cover with capscrews. Attach the T.R.S. switch wire clip with the left front capscrew. Torque the screws to specification.
28. Check the operation of the transmission in all of the gear positions.

SUB-ASSEMBLIES

SHIFT LEVERS AND SEALS

1. Remove the nut, lock washer, and flat washer that secure each shift lever (Fig. 25) to the lever and shaft in the transmission case. Lift the levers off the shaft. Slide each lever and shaft out of the case. Discard the O-ring from each shaft.
2. Lubricate the new seals with transmission lubricant and install them on the shafts.
3. Install the lever and shafts in the case.
4. Position a shift lever on each shaft and secure them with a flat washer, lock washer, and nut.

INPUT SHAFT BEARING

1. Remove the snap ring securing the input shaft bearing (Fig. 26), and press the input shaft out of the bearing.
2. Press the input shaft bearing onto the input shaft with the tool shown in Fig. 27 and install the snap ring on the shaft.

SYNCHRONIZERS

1. Punch or etch alignment marks on the hub of the synchronizer before disassembly. Push the synchronizer hub from each synchronizer sleeve.
2. Separate the inserts and insert springs from the hubs. Do not mix the parts from the second and third-speed synchronizer with the first and reverse synchronizer (Figs. 28 and 29).

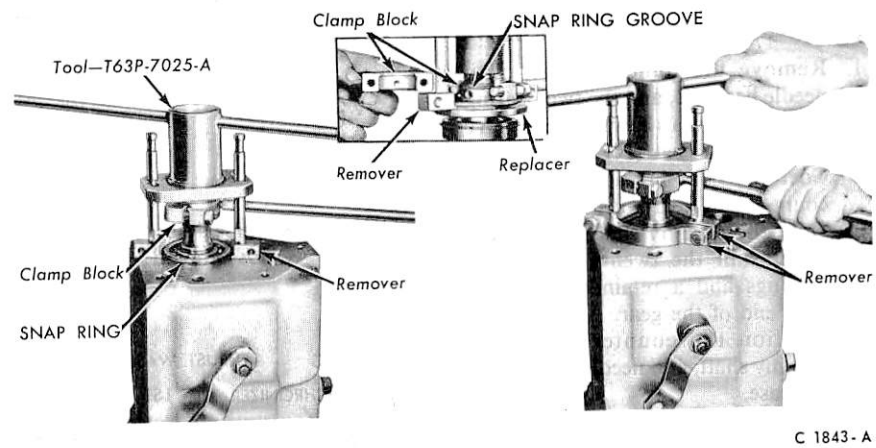

FIG. 18 Removing Output Shaft Bearing

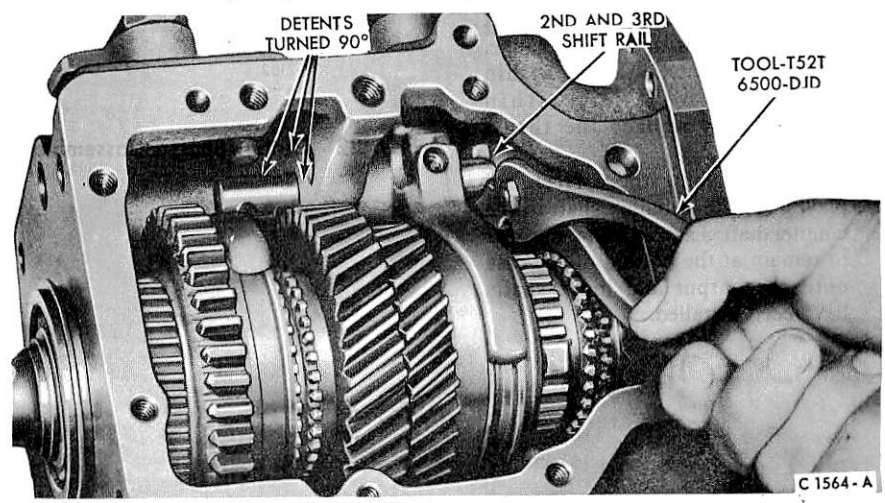

FIG. 19 Rotating Second and third-Speed Shift Rail

3. Install the insert spring in the hub of the first and reverse synchronizer. Make sure that the spring covers all the insert grooves. Start the hub on the sleeve, making sure that the alignment marks are properly indexed. Position the three inserts in the hub, making sure that the small end is on the inside of the hub. Slide the sleeve and reverse gear onto the hub.
4. Install one insert spring (Fig. 30) into a groove of the second and third-speed synchronizer hub, making sure that all three insert slots are fully covered. With the alignment marks on the hub and sleeve aligned, start the hub into the sleeve. Place the three inserts on top of the retaining spring and push the assembly together. Install the remaining insert spring so that the spring ends cover the same slot as does the other spring. Do not stagger the springs. Place a synchronizer blocking ring on each end of the synchronizer sleeve.

COUNTERSHAFT GEAR BEARINGS

1. Remove the dummy shaft, fifty needle bearings, and the two bearing retainer washers from the countershaft gear (Fig. 31).
2. Coat the bore in each end of the countershaft gear with grease.
3. Hold the dummy shaft in the gear and install the twenty-five needle bearings and a retainer washer in each end of the gear.
4. Position the countershaft gear, dummy shaft, and needle bearings in the case.
5. Place the case in a vertical position. Align the gear bore and the thrust washers with the bores in the case and install the countershaft.
6. Place the case in a horizontal position and check the countershaft gear end play with a feeler gauge. The end play should be within specification. If not within specification, replace the thrust washers.
7. After establishing the correct end play, install the dummy shaft in the countershaft gear and allow the gear to remain at the bottom of the case until the output and input shafts have been installed.

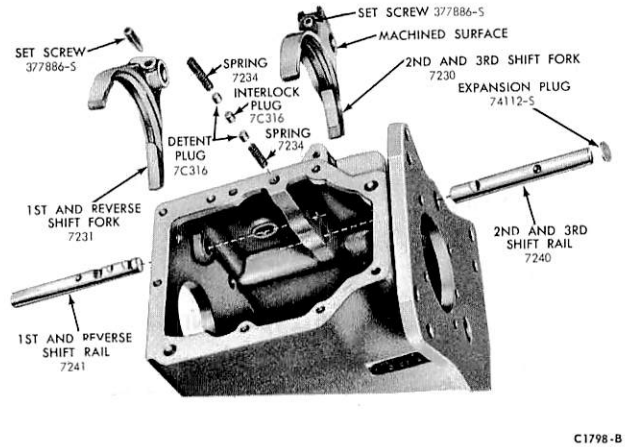

FIG. 20 Shift Rails and Forks Disassembled

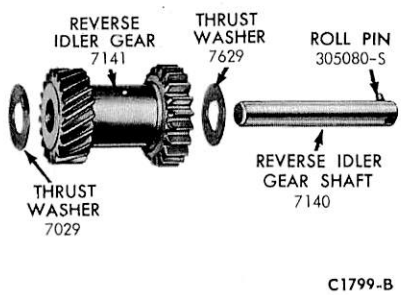

FIG. 21 Reverse Idler Shaft Disassembled

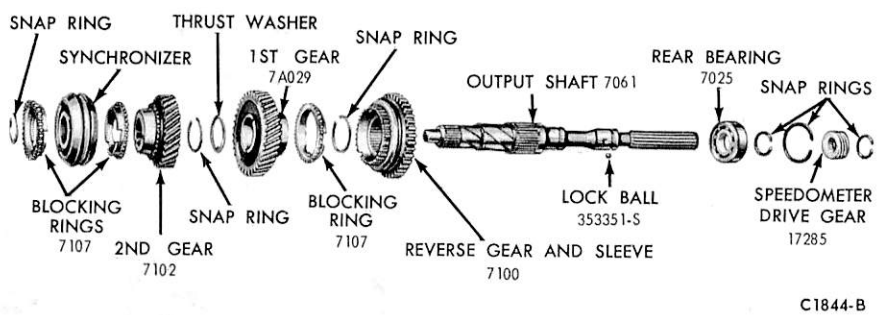

FIG. 22 Output Shaft Disassembled

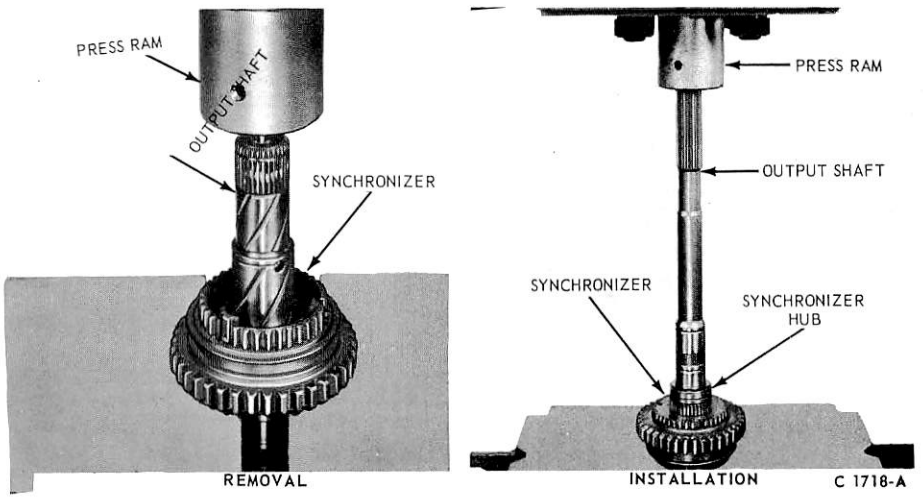

FIG. 23 Removing and Installing First and Reverse Synchronizer

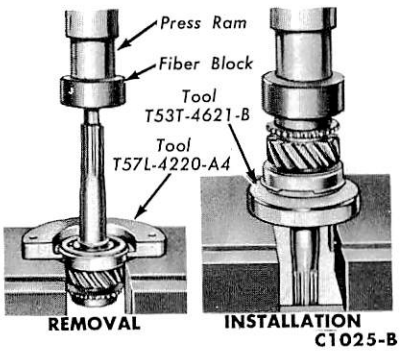

FIG. 27 Replacing Input Shaft Bearing

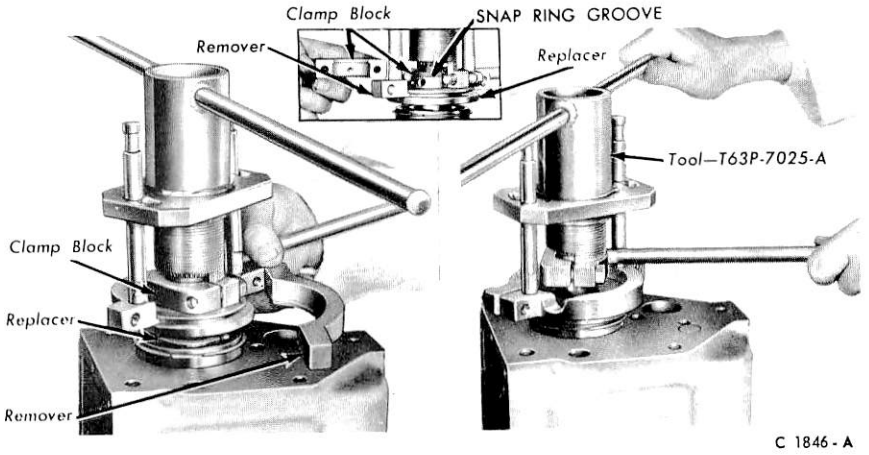

FIG. 24 Installing Output Shaft Rear Bearing

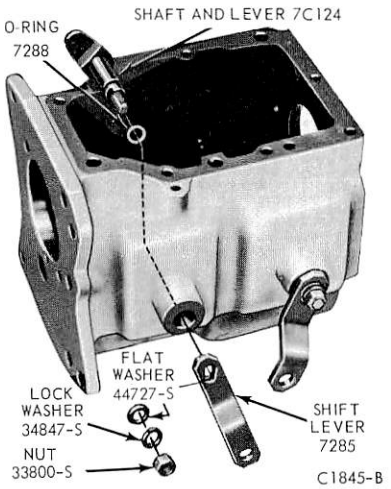

FIG. 25 Shift Lever and Shaft Disassembled

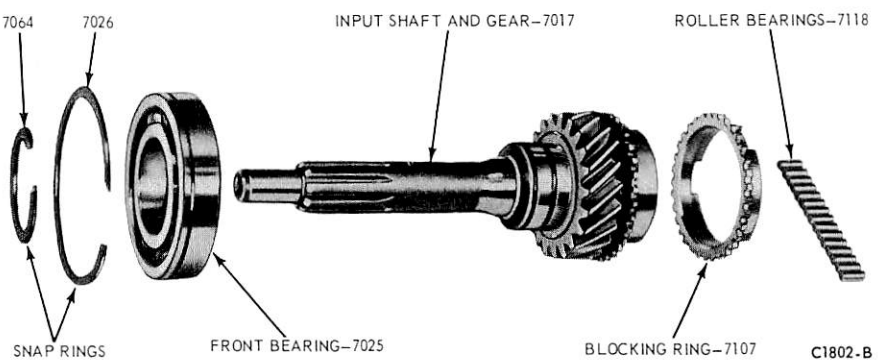

FIG. 26 Input Shaft Gear Disassembled

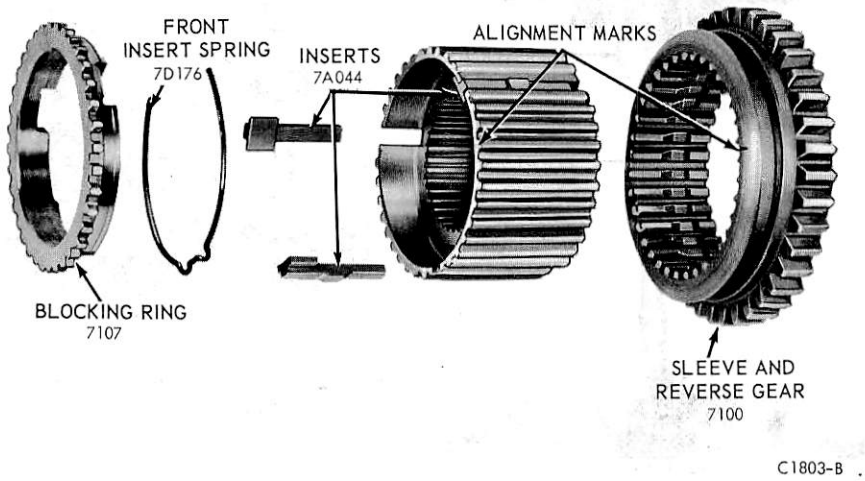

FIG. 28 First and Reverse Synchronizer Disassembled

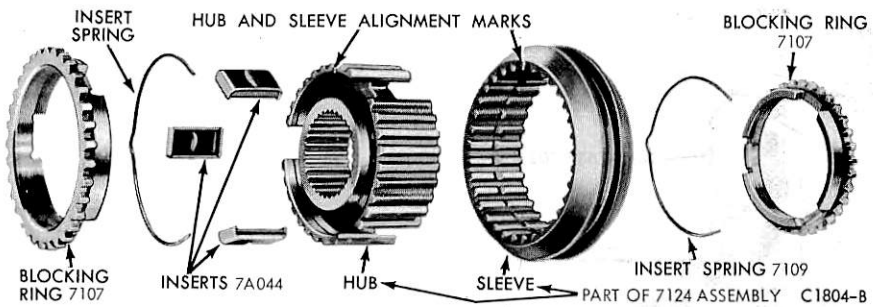

FIG. 29 Second and Third Synchronizer Disassembled

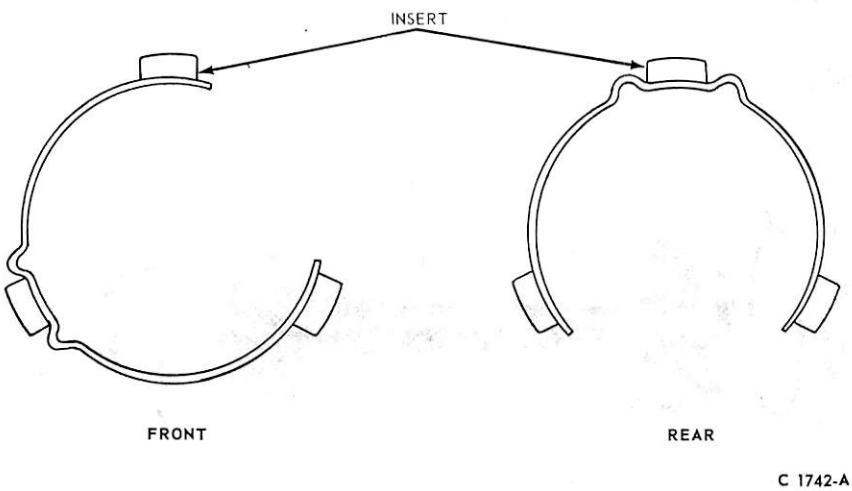

FIG. 30 First and Reverse Synchronizer Insert Spring Installation

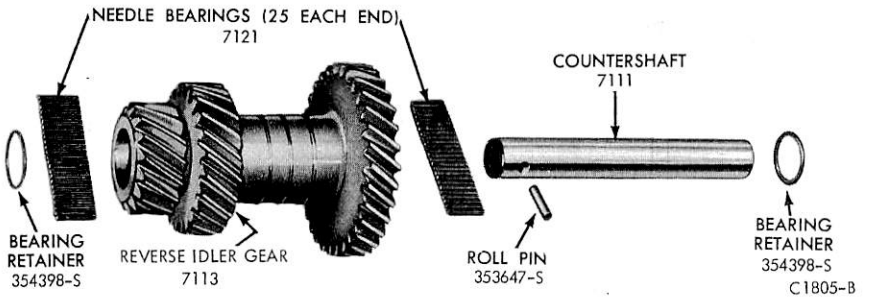

FIG. 31 Countershaft Gear Disassembled

SPECIFICATIONS

TRANSMISSION GEAR RATIOS

Engine	Ratios		
CID	1st	2nd	Rev.
240-6, 300-6, 302-V8, 360-V8	2.99	1.75	3.17
390-V8	2.42	1.61	2.57

ADJUSTMENTS

Transmission	
End Play–Reverse Idler	0.004-0.018 inch
End Play–Countershaft Gear	0.004-0.018 inch

APPROXIMATE LUBRICANT REFILL CAPACITY (PTS)

Transmission – Ford 3.03	US	IMP
(ESW-M2C83-B)	3.5	3.0

TORQUE LIMITS

Item	Torque (Ft-lbs)	Item	Torque (Ft-Lbs)
Input Shaft Gear Bearing Retainer to Transmission Case	30–36	Gear Shift Lever to Cam & Shaft Assembly Lock Nuts	18–23
Transmission to Flywheel Housing	37–42	U-Joint Flange to Output Shaft	60–80
Transmission Cover to Transmission Case	14–19	Filler Plug	10–20
Speedometer Cable Retainer to Transmission Extension	3-4.5	Shifter Fork Set Screw	10–18
Transmission Extension to Transmission Case	42–50	T.R.S. Switch Plug to Case	15-20
Flywheel Housing to Engine	40–50		

CC1039C

PART 16-13 Warner T87G Three Speed Transmission

Applies To P-350-400 and 500

COMPONENT INDEX	Page	COMPONENT INDEX	Page
SHIFT LINKAGE		TRANSMISSION COMPLETE – Contd.	
Adjustments	13-04	Disassembly	13-04
TRANSMISSION COMPLETE		Installation	13-04
Assembly	13-05	Removal	13-04
Cleaning and Inspection	Part 10		
Description	13-01	SPECIFICATIONS	13-06

DESCRIPTION

TRANSMISSION

This three-speed heavy duty transmission incorporates both helical cut and spur gears (Fig. 1). A blocking-ring type synchronizer is used to shift the second and third-speed gears. Spur tooth gears are used for the low and reverse gears. Helical cut gears are used for second and third-speed gears. Ball bearings support the input shaft and the output shaft. Roller bearings, located in the input shaft, support the front end of the output shaft. The cluster gear is also mounted on roller bearings. All gears and bearings are splash lubricated by oil in the transmission case. The housing assembly, mounted on the top of the case, incorporates the remote control shift mechanism (Fig. 2).

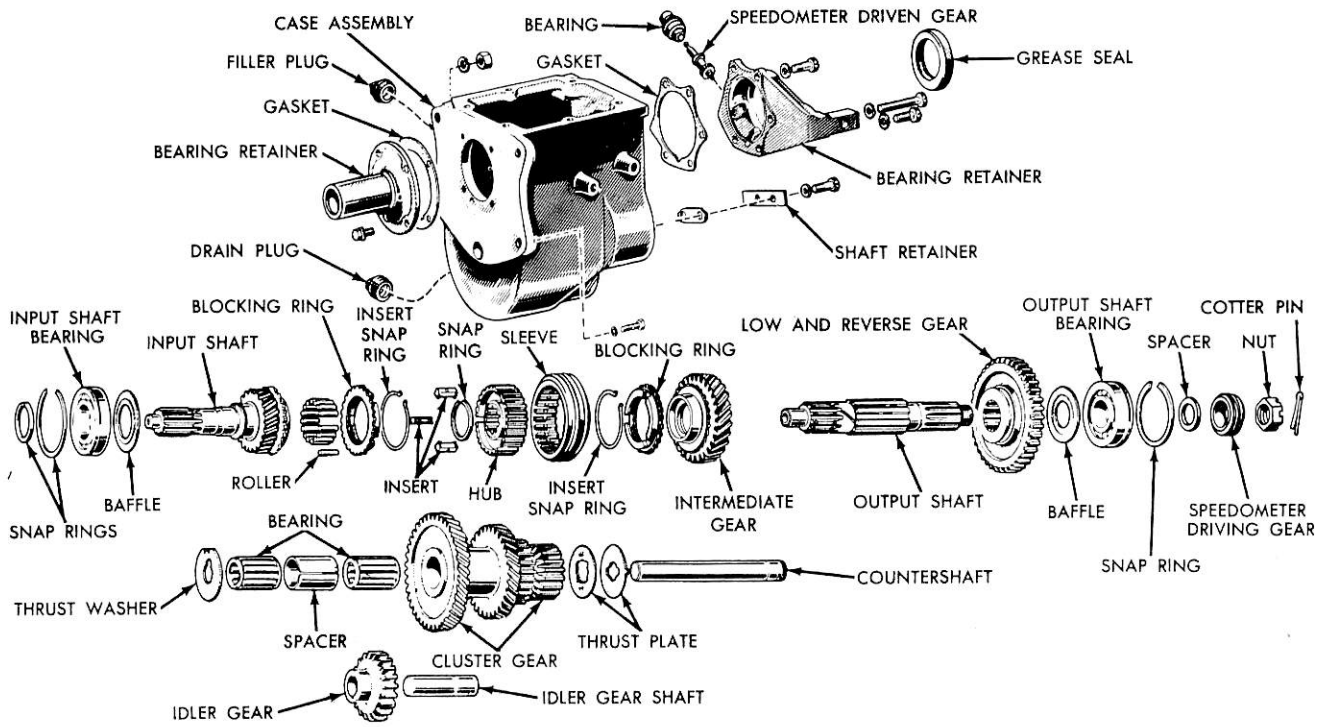

FIG. 1 Model T-87G Three-Speed Heavy Duty Transmission

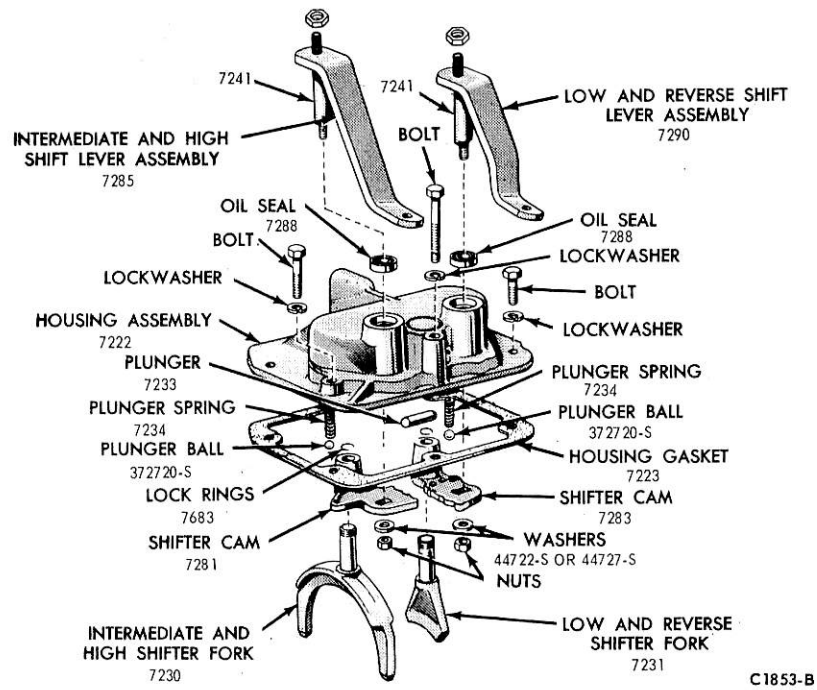

FIG. 2 Model T-87G Gear Shift Housing

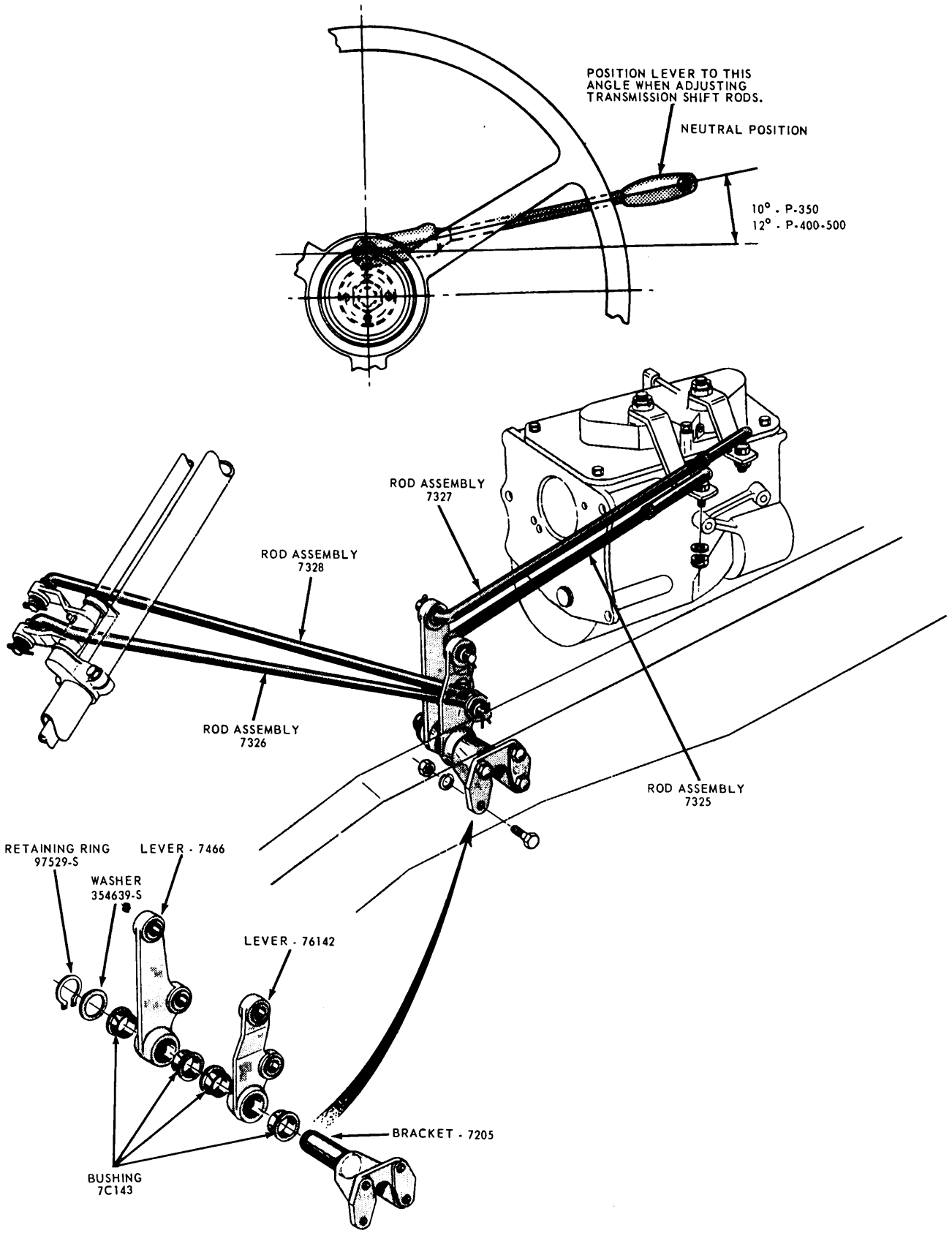

FIG. 3 Gear Shift Linkage Adjustment—P-Series

ADJUSTMENTS

GEAR SHIFT LINKAGE

1. Check the operation of the gear shift linkage for smooth cross-over operation.
2. To adjust the gear shift linkage, move the selector lever to the neutral position. Refer to Fig. 3 for correct position of the lever and neutral specifications.
3. If the selector lever position must be changed, disconnect the adjustable rods at the transmission.
4. Position the sleeves on the rods so that the ends enter the levers freely. Connect the rods.
5. Move the gear shift lever through all shift pattern positions as a final check for smooth operation.

REMOVAL AND INSTALLATION

TRANSMISSION

Removal

1. Raise the vehicle and position safety stands. Drain and discard the transmission lubricant. Position a transmission jack under the transmission, and disconnect the speedometer cable.
2. Disconnect the gear shift linkage at the transmission.
3. If the vehicle is equipped with a band-type parking brake, disconnect the brake cable clevis at the cam. Remove the brake conduit clamp.
4. Remove the front U-joint flange attaching bolts. Remove the bolts that attach the coupling shaft center support to the crossmember and wire the coupling shaft and drive shaft to one side.
5. Remove the transmission attaching bolts, and install guide studs.
6. Move the transmission to the rear until the input shaft clears the clutch housing, then lower the transmission.

Installation

Before installing the transmission, apply a light film of lubricant (C1AZ-19590-B) to the clutch disc splines, release bearing inner hub surfaces, release lever fulcrum and fork, and the transmission front bearing retainer. Care must be exercised to avoid excessive grease contaminating the clutch disc.

1. Place the transmission on a jack, and raise the transmission until the input shaft splines are aligned with the clutch disc splines. The clutch release bearing and hub must be properly positioned in the release lever fork.
2. Install guide studs in the two lower tapped holes in the clutch housing and slide the transmission forward on the guide studs until it contacts the clutch housing. It may be necessary to place the transmission in gear and rotate the output shaft to engage the clutch splines with the input shaft. Install the two upper attaching bolts and nuts, and torque them to specifications. Remove the guide pins and install the lower bolts.
3. Connect the speedometer cable and driven gear and parking brake clevis. Install the brake cable conduit clamp, and shift linkage.
4. Install the bolts attaching the coupling shaft center support to the crossmember. Torque the bolts to specifications.
5. Install the bolts attaching the front U-joint flange to the transmission output shaft flange. Torque the bolts and nuts to specifications.

DISASSEMBLY AND ASSEMBLY

TRANSMISSION

Disassembly

1. Mount the transmission in an overhaul stand.
2. Remove the gear shift housing and the gasket from the case.
3. Lock the output shaft by shifting the transmission into two gears. Remove the output shaft nut and washer, and the parking brake anchor and bracket.
4. Remove the parking brake band assembly, the brake drum, and the flange as an assembly.
5. Remove the output shaft bearing retainer, speedometer driving gear, and spacer.
6. Remove the countershaft and reverse idler shaft retainer (Fig. 1).
7. Drive the countershaft out through the rear of the case.
8. Pull the output shaft bearing with the tool shown in Fig. 4.
9. Remove the input shaft bearing retainer and gasket. Tap the input shaft and bearing as far forward as they will go.
10. Remove the output shaft assembly from the case. Slide the low and reverse sliding gear off the end of the output shaft (Fig. 1). Remove the snap ring and then remove the synchronizer assembly and intermediate gear from the output shaft.
11. Remove the snap ring from the input shaft bearing outer race. Tap the input shaft bearing outer race toward the rear until it clears the case. Remove the shaft and bearing.

If the input shaft bearing is to be replaced, press the old bearing off. When the new bearing is pressed on, make sure the baffle at the rear of the bearing does not rub the bearing outer race. Install the thickest bearing retaining snap ring that will fit. Snap rings are available in the following

thicknesses: 0.094, 0.097, 0.100, 0.103 inch.

12. Pull the reverse idler shaft with Tool T50T-7140-B.
13. Remove the reverse idler gear and the cluster gear from the case.
14. If repair is necessary on the gear shift housing, remove the nuts and flat washers from the inner ends of the shift lever assemblies (Fig. 2). Tap the inner ends of the levers until the shifter cams are forced off the shafts.
15. Raise the cams slowly and remove the shaft lock plunger springs and balls. Slide the plunger out of the bore in the housing. Remove the snap rings which retain the shifter forks in the cams, and remove the forks. Remove the shift lever oil seals from the housing.
16. Clean and inspect the parts as outlined in Part 16-10.

Assembly

1. Position the reverse idler gear in the transmission case, and position the reverse idler shaft.
2. Drive the reverse idler shaft into the case until the inner edge of the retainer notch in the shaft is 1/16 inch from the rear face of the case.
3. Install the spacer and the two countershaft bearings in the cluster gear. Coat the thrust washer and the thrust plates with enough grease to hold them in position on the ends of the cluster gear.
4. Install the cluster gear front thrust washer, with the washer tip hooked into the groove on the inside of the case. Position the cluster gear assembly in the case, with the larger gear toward the front. Temporarily install the countershaft, and check the cluster gear end play. Change the thrust washers as required to obtain 0.006 to 0.020 inch end play. Remove the countershaft.
5. Slide the intermediate gear onto the front end of the output shaft. Coat the synchronizer blocking ring with grease, and install the ring on the intermediate gear. Install the synchronizer assembly on the shaft. The cutouts on the synchronizer ring must mate with the inserts on the hub. Install the snap ring on the shaft.
6. With a feeler gauge, check the end play between the intermediate gear and the shaft spline shoulder (Fig. 5). If the end play exceeds 0.020 inch inspect the gear and the shaft for wear. Replace any worn parts. Install the low and reverse sliding gear on the rear end of the output shaft.
7. Position the input shaft in the case, and tap it as far forward as it will go.
8. Position the output shaft assembly in the case.
9. Place a short 2 x 4 block between the input and output shafts (Fig. 6).
10. Slide the output shaft bearing baffle and bearing onto the output shaft. The baffle is not flat. It must be installed so that it does not rub the bearing outer race. Drive the bearing onto the shaft with the tool shown in Fig. 6.
11. Remove the 2 x 4 block, and place the output shaft pilot roller bearings in the input shaft. Retain them with grease. Place the front blocking ring on the synchronizer.
12. Start the input shaft bearing into the case so that the input shaft is in proper alignment.
13. With the tool shown in Fig. 6, drive the output shaft bearing into the case.
14. Tap the input shaft and bearing into place. Install the input shaft bearing retainer without a gasket, and tighten the bolts to bottom the retainer on the bearing outer race snap ring. With a feeler gauge, check the clearance between the bearing retainer gasket surface and the case.

Select a gasket or gaskets which will seal the oil between the bearing retainer and case, and at the same time prevent any end play between the bearing outer race snap ring and the retainer. Install the bearing retainer. Gaskets are available in the following thickness: 0.008-0.012, 0.0135-0.0165, 0.018-0.022, and 0.0225-0.0275 inch.

15. Raise the cluster gear assembly until the bore in the gear is aligned with the countershaft holes in the transmission case. The thrust washer and thrust plates must be properly aligned. Insert the end of the countershaft in the hole in the rear end of the case.

Drive the countershaft forward until the edge of the notch in the shaft is 1/16 inch from the face of the transmission case.

The countershaft notch must be aligned with the notch in the reverse idler shaft.

16. Install the countershaft and reverse idler shaft retainer and gasket. Do not tighten the bolts. Drive both shafts toward the front (1/16 inch) so that the retainer is tight against its gasket. Torque the shaft retainer bolts to specification.
17. Install the speedometer gear and spacer. After installing a new rear oil seal, install the output shaft bearing retainer and gasket, apply grease to the seal lips and cavity and install the drive flange.
18. Shift the transmission into two gears to lock the output shaft. Install the output shaft nut and washer, and torque to specification.
19. If the gear shift housing cover was disassembled, press new oil seals into the shift lever bores in the gear shift housing. Place the shifter forks in the cams, and install the snap rings which retain the forks in the cams (Fig. 2).
20. Install the shaft lock plunger in the bore in the housing, and place the springs and balls in the holes provided for them. Install the shift lever assemblies in the housing.
21. Position the shifter cams on the inner ends of the lever shafts, and drive the cams onto the shafts until they are seated against the shaft shoulders. Install the flat washers and nuts on the inner ends of the shift lever assemblies, and tighten the nuts securely. Shift the forks and cams into the neutral position.
22. Shift the transmission into neutral. Place a new gasket on the gear shift housing, and install the housing on the case.
23. Check transmission operation in all gears.
24. Fill the transmission with the correct amount of the proper lubricant (SAE 50 motor oil). This should be done through the speedometer cable attachment hole.

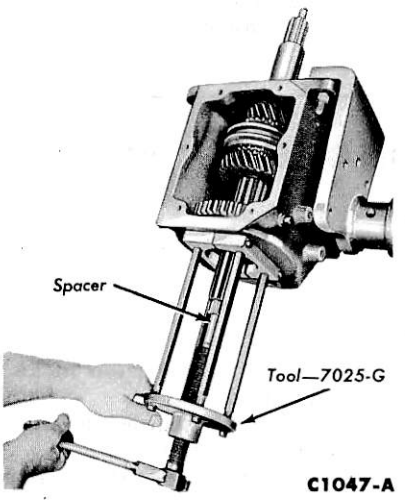

FIG. 4 Removing Output Shaft Bearing

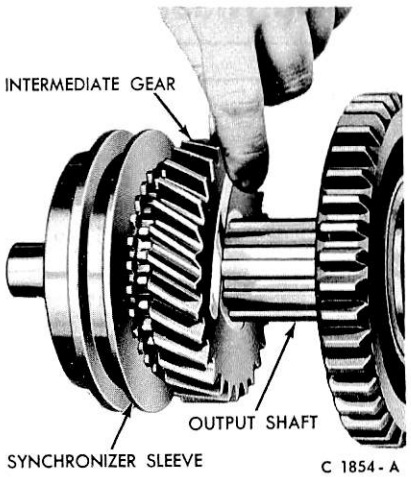

FIG. 5 Checking Intermediate Gear

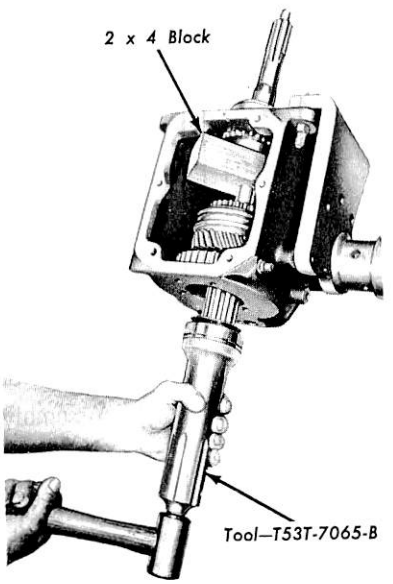

FIG. 6 Installing Output Shaft Bearing

SPECIFICATIONS

TORQUE LIMITS

Transmission	Ft-Lbs
Transmission to Flywheel Housing	37-42
Transmission Cover to Case	14-19
Speedometer Cable Retainer to Transmission Extension	3-4.5
Transmission Extension to Case	20-25
Flywheel Housing to Engine	40-50
Filler Plug	15-20
Drain Plug	20-30
Output Shaft Flange Nut	110-150
Countershaft and Reverse Idler Shaft Retainer Bolt	18-25

CC2201-B

APPROXIMATE LUBRICANT REFILL CAPACITY-PINTS

	U.S.	IMP.
T87G Transmission (SAE 50 Motor Oil ESA-M2C39A)	5.5	4.6

CC1100-A

PART 16-23 Warner T-18 Four Speed Transmission

Applies To F-100-250-350 (Except 4x4)

COMPONENT INDEX	Page	COMPONENT INDEX	Page
COUNTERSHAFT GEAR		REVERSE IDLER GEAR	
Assembly	23-04	Assembly	23-04
Disassembly	23-04	Disassembly	23-04
GEAR SHIFT HOUSING		SPECIFICATIONS	23-06
Assembly	23-05		
Disassembly	23-05	TRANSMISSION	
		Assembly	23-03
OUTPUT SHAFT		Description	23-01
Assembly	23-04	Disassembly	23-03
Disassembly	23-03	Removal and Installation	23-01

DESCRIPTION

TRANSMISSION

The four-speed Model T-18 synchro-silent transmission is equipped with a center, floor-mounted gear shift lever.

The first and reverse gears are spur gears and the second, third, and fourth-speed gears are helical.

The input shaft is supported by a ball bearing (Fig. 1), which is pressed onto the shaft and into the transmission case.

The front end of the output shaft is supported by a pilot bearing installed in the input shaft. The rear end of the output shaft is supported by a ball bearing which is pressed onto the shaft and into the transmission case. The bearing and shaft are retained in the case by a snap ring. Rear oil seal, speedometer gear and rear bushing are contained in the extension housing bolted to the rear of the case.

REMOVAL AND INSTALLATION

TRANSMISSION

Removal

1. Disconnect the back-up light switch located at the rear of the gearshift housing cover.
2. Remove the rubber boot, floor mat, and the body floor pan cover, and remove the transmission shift lever. Remove the weather pad.
3. Raise the truck and position safety stands. Position a transmission jack under the transmission, and disconnect the speedometer cable.
4. Disconnect the drive shaft from the transmission and wire to one side.
5. Remove the transmission rear support.
6. Remove the transmission attaching bolts.
7. Move the transmission to the rear until the input shaft clears the clutch housing, and lower the transmission.

Installation

Before installing the transmission, apply a light film of lubricant (C1AZ-19590-B) to the clutch release bearing inner hub surfaces, release lever fulcrum and fork, and the transmission front bearing retainer. Care must be exercised to avoid excessive grease contaminating the clutch disc.

1. Place the transmission on a transmission jack, and raise the transmission until the input shaft splines are aligned with the clutch disc splines. The clutch release bearing and hub must be properly positioned in the release lever fork.
2. Install guide studs in the clutch housing and slide the transmission forward on the guide studs until it is in position on the clutch housing. Install the attaching bolts and nuts, and torque them to specifications. Remove the guide studs and install the two lower attaching bolts.
3. Connect the speedometer cable and driven gear.
4. Install the bolts attaching the front U-joint to the transmission output shaft flange. Torque the bolts and nuts to specifications. Install the transmission rear support.
5. Connect the back-up light switch.
6. Install the shift lever and lubricate the spherical ball seat with lubricant M1C75B (C1AZ-19590-B).
7. Install the weather pad. Install the floor pan cover, floor mat and boot.

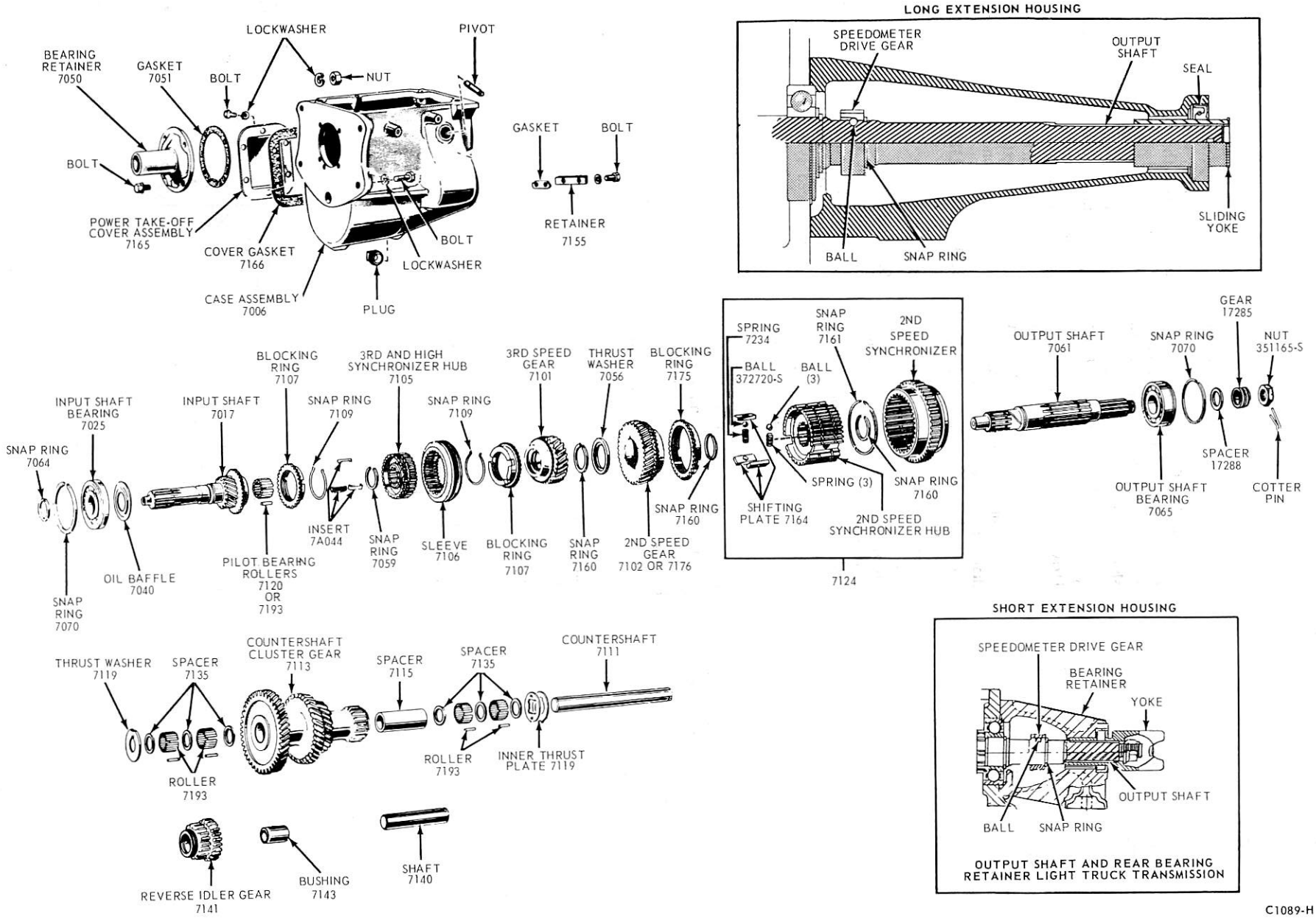

FIG. 1 Warner T-18 Four Speed Transmission

DISASSEMBLY AND ASSEMBLY

TRANSMISSION

Disassembly

1. After draining the transmission and removing the gear shift housing lock the transmission in two gears and remove the U-joint flange and oil seal.
2. Remove the speedometer driven gear and bearing assembly.
3. Remove the output shaft bearing retainer (or extension) and the speedometer drive gear and spacer.
4. Remove the output shaft bearing snap ring, and remove the bearing using tools OTC951 and 927.
5. Remove the countershaft and idler shaft retainer and the power takeoff cover.
6. After removing the input shaft bearing retainer, remove the snap rings from the bearing and the shaft.
7. Remove the input shaft bearing. Remove the oil baffle.
8. Use the tool shown in Fig. 2 to drive out the countershaft (from the front). **Keep the dummy shaft in contact with the countershaft to avoid dropping any rollers.**
9. After removing the input shaft and the synchronizer blocking ring, pull the idler shaft, using the tool shown in Fig. 3.
10. Remove the reverse gear shifter arm. Then remove the output shaft assembly, the idler gear, and the countershaft gear. When removing the countershaft gear, do not lose any of the rollers.

Assembly

1. Coat all parts, especially the bearings, with the specified transmission lubricant to prevent scoring when the transmission is first operated.

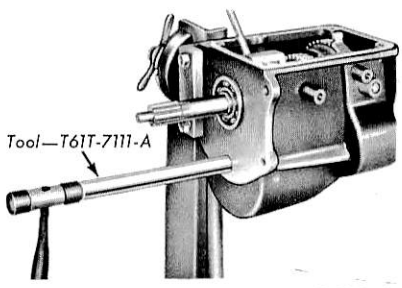

FIG. 2 Removing Countershaft

2. Position the countershaft gear assembly in the case. **Do not lose any rollers.**
3. Position the idler gear assembly in the case, and install the idler shaft. **Position the slot in the rear of the shaft so that it can engage the retainer.** Install the reverse shifter arm.
4. Drive out the countershaft gear dummy shaft by installing the countershaft from the rear. **Position the slot in the rear of the shaft so that it can engage the retainer.**
5. Check the countershaft gear end play, and use thrust washers as required to get 0.006 to 0.020 inch end play.
6. Install the countershaft and idler shaft retainer.
7. Position the input shaft pilot rollers and the oil baffle, placing the baffle so that it will not rub the bearing race. Position the input shaft in the case and install the blocking ring.
8. Install the output shaft assembly in the case, and position the tool shown in Fig. 4 to prevent jamming the blocking ring when the input shaft bearing is installed.
9. Drive the input shaft bearing onto the shaft, using the tool shown in Fig. 5. Install the thickest select-fit snap ring that will fit on the bearing. This snap ring is available in the following thicknesses: 0.117-0.119, 0.120-1.122, 0.123-0.025, and 0.127-0.129 inch. Install the input shaft snap ring.
10. Install the output shaft bearing, using the tool shown in Fig. 5. If the output shaft bearing is to be replaced, be sure it is a maximum load rated bearing.
11. Install the input shaft bearing retainer **without a gasket,** and tighten the bolts only enough to bottom the retainer on the bearing snap ring.

Measure the clearance between the retainer and the case, and select a gasket (or gaskets) that will seal in the oil and at the same time prevent end play between the retainer and the snap ring. Gaskets are available in the following thicknesses: 0.008-0.011, 0.0135-0.0165, 0.018-0.022 and 0.0225-0.0275 inch. Torque the bolts to specifications.

12. Position the speedometer drive gear and spacer, if required, and install a new output shaft bearing retainer gasket.
13. Install the output shaft bearing retainer (or extension). Torque the bolts to specification. If required, install safety wire.
14. Lubricate the extension housing bushing and seal and U-joint flange with ball joint grease.
15. Install the U-joint flange. Lock the transmission in two gears and torque the nut to specification.
16. Fill the transmission to the proper level (through the speedometer cable hole in the extension housing) with the recommended lubricant.

SUB-ASSEMBLIES

OUTPUT SHAFT

Disassembly

1. Remove the third and high speed synchronizer hub snap ring from the output shaft, and slide the third and high-speed synchronizer assembly and the third-speed gear off the shaft.
2. Remove the synchronizer sleeve and the inserts from the hub. Before removing the two snap rings from the ends of the hub, check the end play of the second-speed gear. There should be 0.005 to 0.024 inch of end play.
3. Remove the second-speed synchronizer snap ring. Slide the second-speed synchronizer gear off the hub.

Be careful not to lose any of the balls, springs or plates, nor the anti-rattle spring and ball. Pull the hub synchronizer off the shaft, and remove the second-speed synchronizer from the second-speed gear.

4. Remove the snap ring from the rear of the second-speed gear, and remove the gear, and thrust washer from the output shaft.

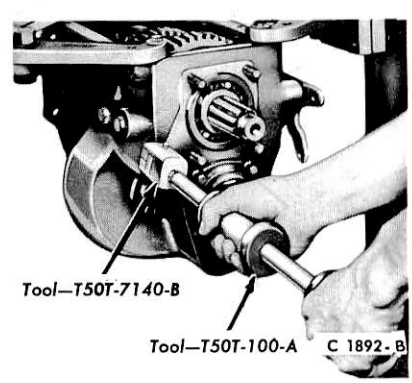

FIG. 3 Removing Reverse Idler Shaft

Assembly

1. Install the second-speed gear thrust washer and snap ring on the output shaft. Hold the shaft in a vertical position, and slide the second-speed gear onto the shaft.
2. Install the snap ring on the output shaft at the rear of the second-speed gear. Position the blocking ring on the second-speed gear. **Do not invert the shaft because the bearing rollers will slide out of the gear.**
3. Press the second-speed synchronizer hub onto the shaft, and install the snap ring.
4. Position the output shaft vertically in a soft-jawed vise. Position the springs and plates in the second-speed synchronizer hub, and place the hub gear on the hub.
5. Hold the gear above the hub spring and ball holes, and position one ball at a time in the hub. Push the ball down into the hole, and slide the hub gear downward to hold the ball in the hub. Push the plate upward, and insert a small block to hold the plate in position, thereby holding the ball in the hub. Repeat these procedures to install the remaining balls in the hub. Install the anti-rattle spring and ball.
6. Remove the output shaft from the vise, and install the third-speed gear and synchronizer blocking ring on the shaft.
7. Install the snap rings at both ends of the third and high-speed synchronizer hub. Stagger the openings of the snap rings so that they are not in line with each other.
8. Place the inserts in the synchronizer sleeve, and position the sleeve on the hub.
9. Slide the synchronizer assembly onto the output shaft. The slots in the blocking ring must be in line with the synchronizer inserts. Install the snap ring at the front of the synchronizer assembly.

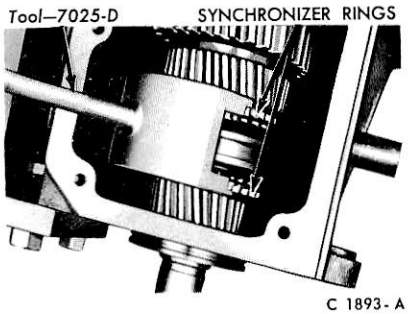

FIG. 4 Stop Yoke Tool

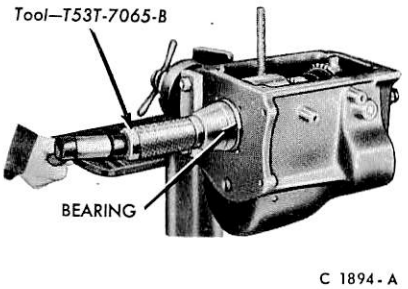

FIG. 5 Installing Input Shaft Bearing

COUNTERSHAFT GEAR

Disassembly

Remove the dummy shaft, pilot bearing rollers, bearing spacers, and the center spacer from the countershaft gear.

Assembly

1. Slide the long bearing spacer (Fig. 1) into the countershaft gear bore, and insert the dummy shaft in the spacer.
2. Hold the gear in a vertical position, and install one of the bearing spacers. Position the 22 pilot bearing rollers in the gear bore.
3. Place a spacer on top of the rollers, and install 22 more rollers and another spacer.
4. Hold a large thrust washer against the end of the countershaft gear to prevent the rollers from dropping out, and turn the assembly over. Install the rollers and spacers in the other end of the gear.

REVERSE IDLER GEAR

Disassembly

Replace the reverse idler gear if the gear or bushing is badly worn or if the

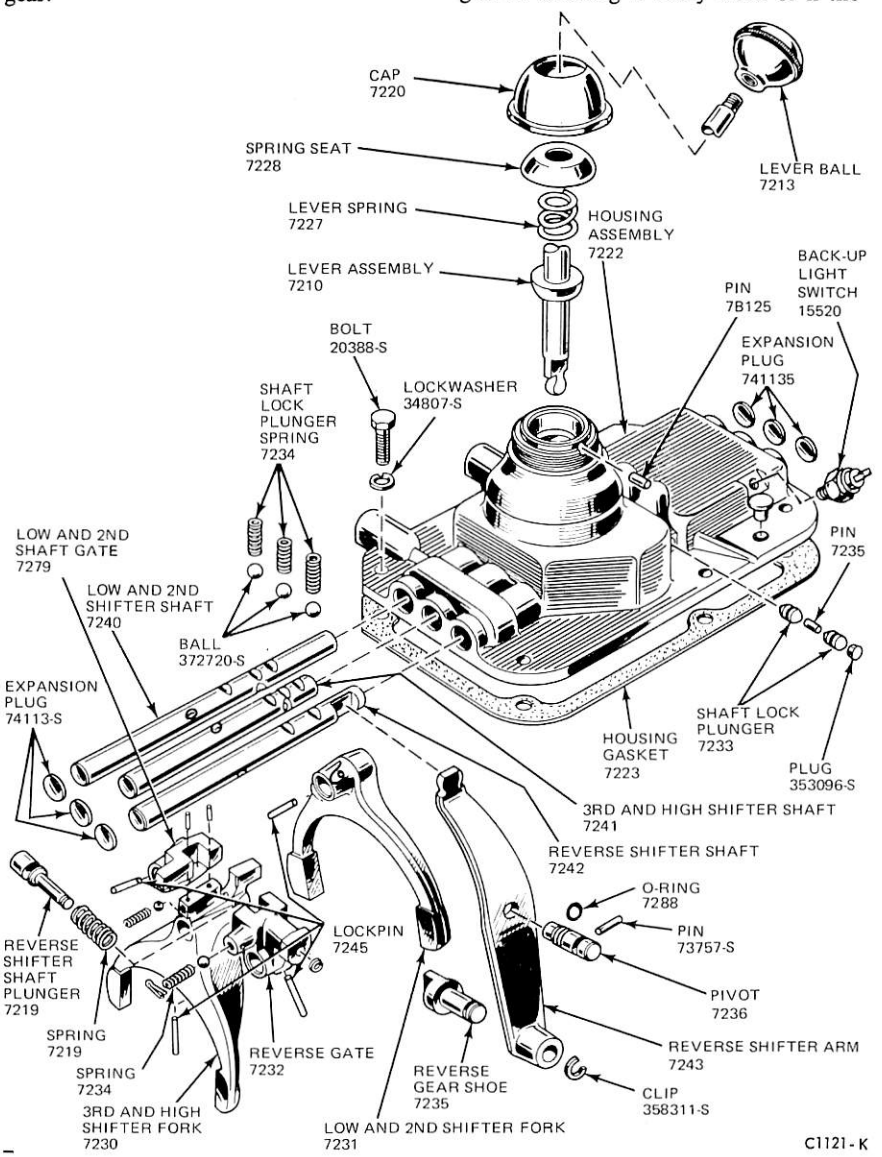

FIG. 6 Conventional Cab Gear Shift Housing

teeth are chipped or burred. Replace the reverse idler gear shaft if it is excessively worn or scored.

GEAR SHIFT HOUSING

Disassembly

1. Remove the back-up lamp switch from the housing (Fig. 6).
2. Remove the gear shift lever housing cap, and lift the lever out of the housing (Fig. 6). Be sure all shafts are in neutral before disassembly.
3. Remove the lock pin from the shifter forks and shifter shaft gates. Remove the expansion plugs from the forward end of the housing.
4. Tap the shifter shafts out of the housing while holding one hand over the holes in the housing to prevent loss of the springs and balls. Lift the two shaft lock plungers out of the housing.

Assembly

1. Place the spring on the reverse gear shifter shaft gate plunger, and install the spring and plunger in the reverse gate (Fig. 6). Press the plunger through the gate, and fasten it in place with the clip.
2. Place the spring and ball in the reverse gate poppet hole. Compress the spring and install the cotter pin.
3. Place the spring and ball in the reverse shifter shaft hole in the gear shift housing. Press down on the ball with a long, thin drift, and position the reverse shifter arm notch so that it does not slide over the ball. Insert the shaft part way into the housing.
4. Slide the reverse gate onto the shaft, and drive the shaft into the housing until the ball snaps into the groove of the shaft. Install the lock pin that fastens the gate to the shaft.
5. Insert the two interlocking plungers in the pockets between the shifter shaft holes. Place the spring and ball in the low and second shifter shaft hole. Press down on the ball, and insert the shifter shaft part way into the housing.
6. Slide the low and second shifter shaft gate onto the shaft, and install the low and second shifter fork on the shaft so that the offset of the fork is toward the rear of the housing. Push the shaft all the way into the housing until the ball snaps into the shaft groove. Install the roll pin that fastens the fork to the shaft.
7. Install the third and high shifter shaft in the same manner. Check the interlocking system. Install new expansion plugs in the ends of the shaft bores.
8. Install the back-up lamp switch in the housing. Torque the switch to specifications.

SPECIFICATIONS

APPROXIMATE LUBRICANT REFILL CAPACITY (PINTS)

Transmission	US	IMP
Warner T-18 (SAE 50 Engine Oil) (M2C39-A)	7	6

CC2221-B

TORQUE LIMITS

Transmission	Ft-Lbs
Transmission to Flywheel Housing	37-42
Transmission Cover to Case	14-19
Speedometer Cable Retainer to Transmission Extension	3-4.5
Transmission Extension to Case	20-25
Flywheel Housing to Engine	40-50
Filler Plug	15-20
Drain Plug	20-30
Output Shaft Flange Nut	110-150
Countershaft and Reverse Idler Shaft Retainer Bolt	18-25

CC2201-B

PART 16-24 Warner T-19 Four-Speed Transmission

Applies To F-500-600,F-600 4x4

COMPONENT INDEX	Page	COMPONENT INDEX	Page
SPECIFICATIONS	24-07	REVERSE IDLER GEAR	
SUB-ASSEMBLIES		Assembly	24-04
Countershaft Gear		Disassembly	24-04
Assembly	24-04		
Disassembly	24-04		
Gear Shift Housing		TRANSMISSION ASSEMBLY	
Assembly	24-05	Assembly	24-03
Disassembly	24-04	Description	24-01
Output Shaft		Disassembly	24-03
Assembly	24-04	Installation	24-03
Disassembly	24-04	Removal	24-03

DESCRIPTION

TRANSMISSION

The four-speed fully synchronized T-19 transmission is equipped with a center, floor-mounted gear shift lever.

The reverse gear and the first, second, third and fourth-speed gears are helical.

The input shaft is supported by a ball bearing (Fig. 1) which is pressed onto the shaft and into the transmission case.

The front end of the output shaft is supported by a pilot bearing installed in the input shaft. The rear end of the output shaft is supported by a ball bearing which is pressed onto the shaft and into the transmission case. The bearing and shaft are retained in the case by a snap ring.

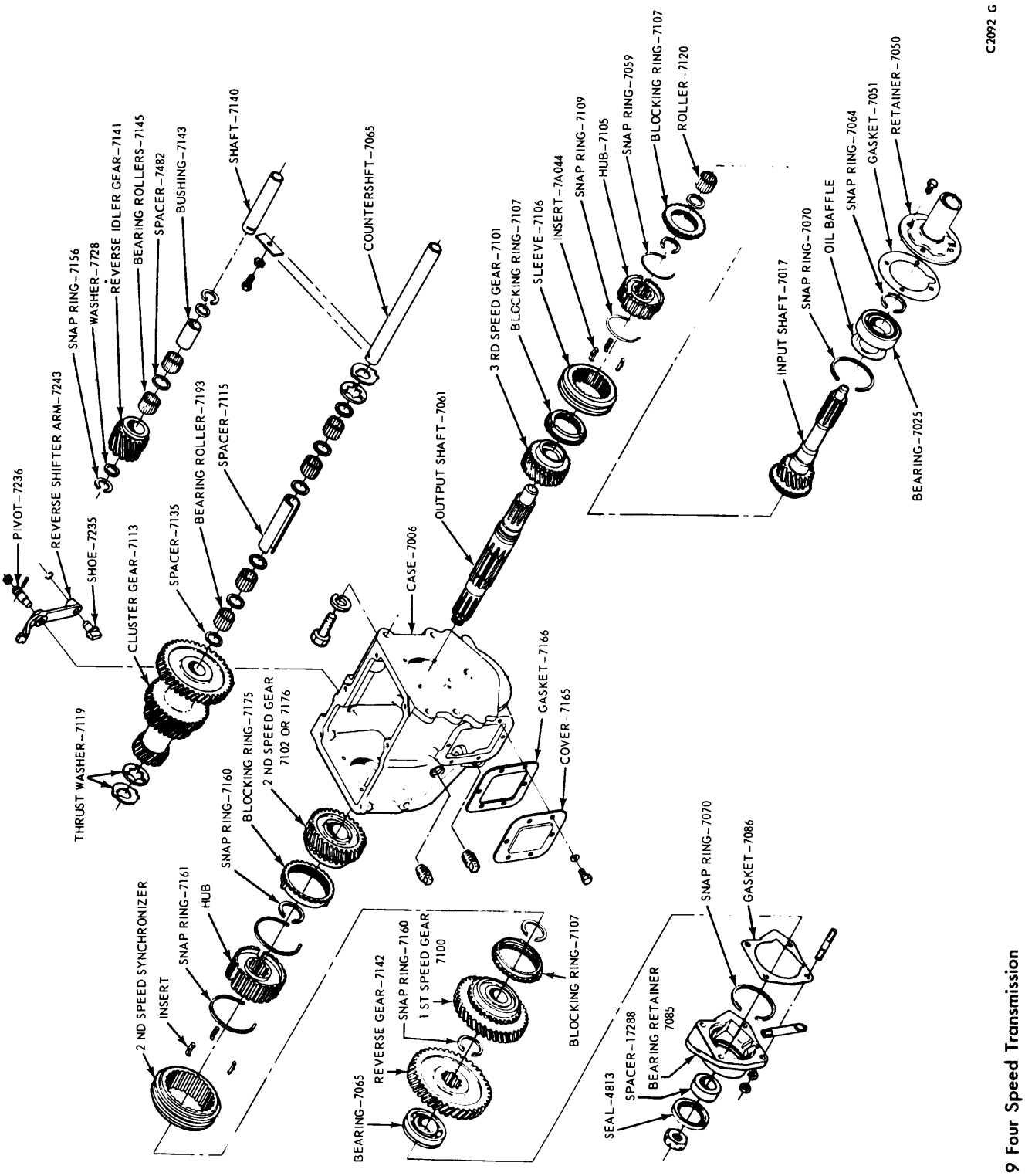

FIG. 1 Warner T-19 Four Speed Transmission

REMOVAL AND INSTALLATION

TRANSMISSION

Removal

1. Disconnect the back-up light switch located at the rear of the gear shift housing cover.
2. Remove the rubber boot, floor mat and body floor pan cover. Remove the transmission shift lever. Remove the weather pad and pad retainer.
3. Raise the truck and position safety stands. Position a transmission jack under the transmission and disconnect the speedometer cable.
4. If the truck is equipped with a band-type parking brake, disconnect the brake cable clevis at the cam. Remove the brake cable conduit clamp.
5. Remove the front U-joint flange attaching bolts. remove the bolts that attach the coupling shaft center support to the crossmember and wire the coupling shaft and drive shaft to one side.
6. Remove the transmission attaching bolts.
7. Move the transmission to the rear until the input shaft clears the clutch housing. Lower the transmission.

Installation

Before installing the transmission, apply a light film of lubricant (C1AZ-19590-B) to the release bearing inner hub surfaces, release lever fulcrum and fork, and the transmission front bearing retainer. Exercise care to avoid contaminating the clutch disc with excessive grease.

1. Place the transmission on a transmission jack, and raise the transmission until the input shaft splines are aligned with the clutch disc splines. The clutch release bearing and hub must be properly positioned in the release lever fork.
2. Install guide studs in the clutch housing and slide the transmission forward on the guide studs until it is in position on the clutch housing. Install the attaching bolts and nuts and torque them to specifications. Remove the guide studs and install the two lower attaching bolts.
3. Connect the speedometer cable and driven gear and parking brake clevis. Install the brake cable conduit clamp and shift linkage.
4. Install the bolts attaching the coupling shaft center support to the crossmember. Torque the bolts to specifications.
5. Install the bolts attaching the front U-joint flange to the transmission output shaft flange. Torque the bolts and nuts to specifications.
6. Connect the back-up light switch.
7. Install the shift lever and lubricate the spherical ball seat with ball joint lubricant (C1AZ-19590-B).
8. Install the weather pad and pad retainer. Install the floor pan cover, floor mat and boot.

DISASSEMBLY AND ASSEMBLY

TRANSMISSION

Disassembly

1. After draining the transmission and removing the gear shift housing and parking brake drum (or shoe assembly), lock the transmission in two gears and remove the U-joint flange and oil seal.
2. Disconnect the parking brake linkage, remove the brake shoe assembly (or drum) and remove the speedometer driven gear and bearing assembly.
3. Remove the output shaft bearing retainer (or extension) and the speedometer drive gear and spacer. Also remove the output shaft bearing retainer studs from the case.
4. Remove the output shaft bearing snap ring and remove the bearing using Tools OTC951 and 927.
5. Remove the countershaft and idler shaft retainer and the power takeoff cover.
6. After removing the input shaft bearing retainer, remove the snap rings from the bearing and the shaft.
7. Remove the input shaft bearing. Remove the oil baffle.
8. Remove the roll pin from the reverse gear shifter arm shaft and remove the shaft from the shifter. Lift the shifter out of the case.
9. Remove the output shaft and gear assemblies from the case.
10. Use the tool shown in Fig. 2 to drive out the countershaft (from the front). **Keep the dummy shaft in contact with the countershaft to avoid dropping the rollers.**
11. After removing the input shaft and the synchronizer blocking ring, pull the idler shaft, using the tool shown in Fig. 3.
12. Remove the idler gear and the countershaft gear. When removing the countershaft gear, do not lose any of the rollers.

Assembly

1. Coat all parts, especially the bearings, with the specified transmission lubricant to prevent scoring when the transmission is first operated.
2. Position the countershaft gear assembly in the case. **Do not lose any rollers.**
3. Position the idler gear assembly in the case and install the idler shaft. **Position the slot in the rear of the shaft so that it can engage the retainer.** Install the reverse shifter arm.
4. Drive out the countershaft gear dummy shaft by installing the countershaft from the rear. **Position**

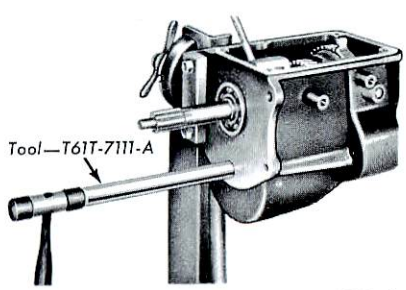

FIG. 2 Removing Countershaft

the slot in the rear of the shaft so that it can engage the retainer.

5. Check the countershaft gear end play. Use thrust washers as required to get 0.006 to 0.020 inch end play.
6. Install the countershaft and idler shaft retainer.
7. Position the input shaft pilot rollers and the oil baffle, placing the baffle so that it will not rub the bearing race. Position the input shaft in the case and install the blocking ring.
8. Install the output shaft assembly in the case.
9. Drive the input shaft bearing onto the shaft, using the tool shown in Fig. 4. Install the thickest select-fit snap ring that will fit on the bearing. This snap ring is available in the following thicknesses: 0.117-0.119, 0.120-0.122, 0.123-0.125, and 0.127-0.129 inch. Install the input shaft snap ring.
10. Install the output shaft bearing. If the output shaft bearing is to be replaced, be sure it is a maximum load rated bearing.
11. Install the input shaft bearing retainer (Fig. 1) **without a gasket and tighten the bolts only enough to bottom the retainer on the bearing snap ring.**

Measure the clearance between the retainer and the case and select a gasket (or gaskets) that will seal in the oil and at the same time prevent end play between the retainer and the snap ring. Gaskets are available in the following thickness: 0.008-0.011, 0.0135-0.0165, 0.018-0.022 and 0.0225-0.0275 inch. Torque the bolts to specification.

12. Position the speedometer drive gear and spacer, if required, and install a new output shaft bearing retainer gasket.
13. Install the output shaft bearing retainer (or extension). Torque the bolts to specification. If required, install safety wire.
14. Install the brake shoe (or drum) and torque the bolts to specification.
15. Lubricate the extension housing bushing and seal and U-joint flange with ball joint grease.
16. Install the U-joint flange. Lock the transmission in two gears and torque the nut to specification.
17. Fill the transmission to the proper level with the recommended lubricant (SAE 50 engine oil).

SUB-ASSEMBLIES

OUTPUT SHAFT

Disassembly

1. Remove the third and high-speed synchronizer hub snap ring from the output shaft and slide the third and high-speed synchronizer assembly and the third-speed gear off the shaft.
2. Place input shaft in an Arbor Press and press the reverse gear off the shaft.
3. Remove the first-speed snap ring and slide the first-speed gear off the output shaft.
4. Remove the first and second-speed synchronizer snap ring. Slide the second-speed synchronizer off the shaft.
5. Remove the snap ring from the rear of the second-speed gear. Remove the gear and thrust washer from the output shaft.

Assembly

1. Install the second-speed gear thrust washer and snap ring on the output shaft. Hold the shaft in a vertical position and slide the second-speed gear onto the shaft.
2. Install the snap ring on the output shaft at the rear of the second-speed gear. Position the blocking ring on the second-speed gear.
3. Press the first and second-speed synchronizer onto the shaft and install the snap ring.
4. Install the first-speed gear and snap ring on the shaft.
5. Mount the output shaft in a press and press the reverse gear on the shaft.
6. Remove the output shaft from the press. Install the third-speed gear and synchronizer blocking ring on the shaft.
7. Install the snap rings at both ends of the third and high-speed synchronizer hub. Stagger the openings of the snap rings so that they are not in line with each other.
8. Place the inserts in the synchronizer sleeve and position the sleeve on the hub.
9. Slide the synchronizer assembly onto the output shaft. The slots in the blocking ring must be in line with the synchronizer inserts. Install the snap ring at the front of the synchronizer assembly.

COUNTERSHAFT GEAR

Disassembly

Remove the dummy shaft, pilot bearing rollers, bearing spacers and center spacer from the countershaft gear.

Assembly

1. Slide the long bearing spacer (Fig. 1) into the countershaft gear bore and insert the dummy shaft in the spacer.
2. Hold the gear in a vertical position and install one of the bearing spacers. Position the 22 pilot bearing rollers in the gear bore.
3. Place a spacer on top of the rollers and install 22 more rollers and another spacer.
4. Hold a large thrust washer against the end of the countershaft gear to prevent the rollers from dropping out and turn the assembly over. Install the rollers and spacers in the other end of the gear.

REVERSE IDLER GEAR

Disassembly

Check the idler gear roller bearings for roughness by holding the bushing from turning while rotating the gear. The gear should then be installed on the shaft to check for roughness between the shaft and bushing. If the gear turns freely and smoothly, disassembly of the unit is not necessary. If any roughness is noticed, disassemble the unit as follows:

Remove the snap ring from one end of the gear. Remove the idler gear bearing rollers, thrust washers, bearing spacer and bushing from the gear.

Assembly

1. Install a snap ring (Fig. 1) in one end of the idler gear and set the gear on end, with the snap at the bottom.
2. Position a thrust washer in the gear on top of the snap ring. Install the bushing on top of the washer. Insert 37 bearing rollers between the bushing and the gear bore.
3. Install a spacer on top of the rollers and install 37 more rollers.
4. Place the remaining thrust washer on the rollers and install the other snap ring.

GEAR SHIFT HOUSING

Disassembly

1. Remove the gear shift lever housing cap and lift the lever out of the housing (Fig. 5). Be sure all shafts are in neutral before disassembly.

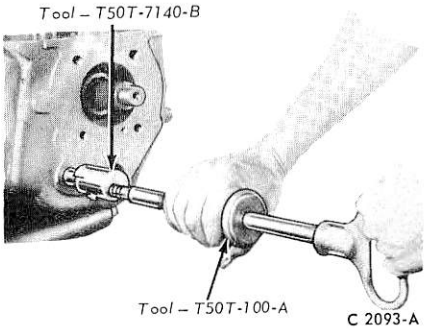

FIG. 3 Removing Reverse Idler Shaft

2. Remove the lock pin from the shifter forks and shifter shaft gates. Remove the expansion plugs from the forward end of the housing.
3. Tap the shifter shafts out of the housing while holding one hand over the holes in the housing to prevent loss of the springs and balls. Lift the two shaft lock plungers out of the housing.

Assembly

1. Place the spring on the reverse gear shifter shaft gate plunger. Install the spring and plunger in the reverse gate (Fig. 5). Press the plunger through the gate and fasten it in place with the clip.
2. Place the spring and ball in the reverse gate poppet hole. Compress the spring and install the cotter pin.
3. Place the spring and ball in the reverse shifter shaft hole in the gear shift housing. Press down on the ball with a long, thin drift and position the reverse shifter arm so that the notch does not slide over the ball. Insert the shaft part way into the housing.
4. Slide the reverse gate onto the shaft. Drive the shaft into the housing until the ball snaps into the groove of the shaft. Install the lock pin that fastens the gate to the shaft.
5. Insert the two interlocking plungers in the pockets between the shifter shaft holes. Place the spring and ball in the low and second shifter shaft hole. Press down on the ball and insert the shifter shaft part way into the housing.
6. Slide the low and second shifter shaft gate onto the shaft. Install the low and second shifter fork on the shaft so that the offset of the fork is toward the rear of the housing. Push the shaft all the way into the housing until the ball snaps into the shaft groove. Install the lock screw that fastens the fork to the shaft and install the lock wire.
7. Install the third and high shifter shaft in the same manner. Check the interlocking system. Install new expansion plugs in the ends of the shaft bores.

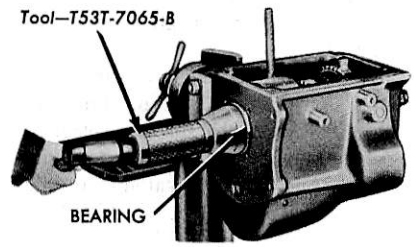

FIG. 4 Installing Input Shaft Bearing

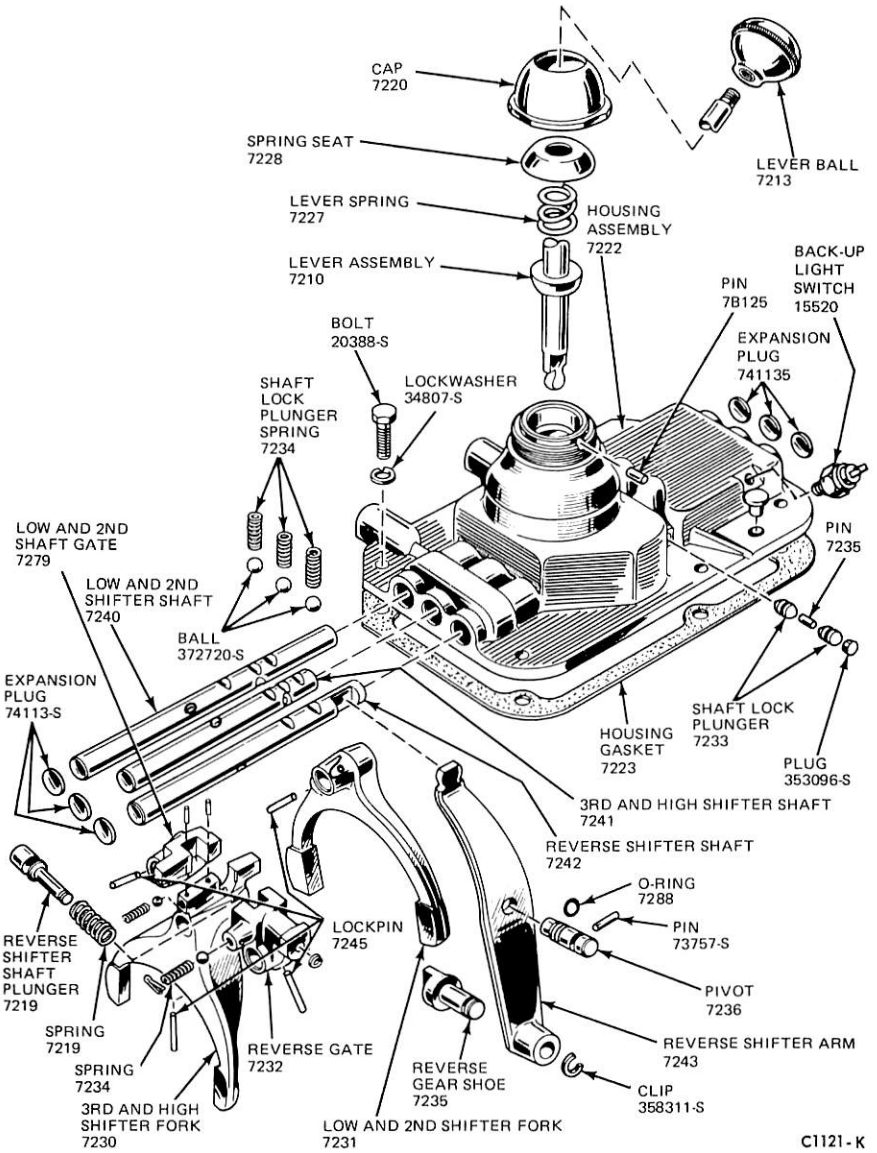

FIG. 5 Gear Shift Housing

SPECIFICATIONS

APPROXIMATE LUBRICANT REFILL CAPACITY (PINTS)

Transmission	US	IMP
Warner T-19 (SAE 50 Engine Oil) (ESE-M2C39A)	6.5	5.75

CC1101-A

TORQUE LIMITS

Transmission	Ft-Lbs
Transmission to Flywheel Housing	37-42
Transmission Cover to Case	14-19
Speedometer Cable Retainer to Transmission Extension	3-4.5
Transmission Extension to Case	20-25
Flywheel Housing to Engine	40-50
Filler Plug	15-20
Drain Plug	20-30
Output Shaft Flange Nut	110-150
Countershaft and Reverse Idler Shaft Retainer Bolt	18-25

CC2201-B

PART 16-25 New Process 435 Four-Speed Transmission

Applies To: F-100-350 (4 x 2), F-100-250 (4 x 4), P-350-500, B-500-700, F-500-700, C-600-700 and LN-600-700 Models

COMPONENT INDEX	Page
TRANSMISSION	
Assembly	25-06
Countershaft Gear Front Bearing	25-07
Countershaft Gear Rear Bearing	25-07
Description	25-01
Disassembly	25-06
First Speed Gear	25-07
Input Shaft Bearing	25-07
Input Shaft Bearing Race	25-07
Input Shaft Roller Bearings	25-07
Input Shaft Seal	25-07
Installation	25-03
Removal	25-03
Reverse Idler Gear Bearings	25-07
Second Speed Gear	25-07
Specifications	25-15

DESCRIPTION

TRANSMISSION

The four-speed Model 435 transmission (Fig. 1), is provided with a floor-mounted shift lever or with a floor-mounted remote shift lever.

The first and reverse gears are spur cut (Fig. 2). The second, third and fourth gears are helical cut, and are synchronized to permit easier shifting.

The input shaft is supported by a tapered roller bearing. The input shaft end play is controlled by the thickness of gaskets between the case and the front bearing retainer.

The front end of the output shaft is supported by a pilot bearing that is located in the input shaft. The rear end of the output shaft is supported by a ball bearing that is pressed onto the shaft. The bearing and shaft are held in the case by a snap ring and a bearing retainer. Retention of the output shaft in the case may vary, depending on application. Various extension housings are used, (Figs. 2 and 4) in order to fit several truck models.

The third and fourth-speed synchronizer is mounted on the forward end of the output shaft and is held in place by the gear end of the input shaft, and the third-speed gear. The third and second-speed gears are located between the shoulder and the third and fourth-speed synchronizer on the output shaft.

The second-speed synchronizer and the first-speed sliding gear is located toward the rear of the output shaft (Fig. 2). A spacer is provided to prevent the first-speed sliding gear from contacting the case.

The countershaft gear is supported by roller bearings installed at both ends of the gear. A roller type thrust bearing and a bearing race are provided at the rear end of the gear. A thrust washer is also provided at the front of the gear. Uncaged rollers are used in production, but caged roller assemblies are available for service.

The reverse idler gear is supported by roller bearings except in F-100-350 and P-Series installations, where a bronze bushing is used. Only the roller bearing type gear is supplied for service replacement, however. The bearings are installed between the gear and a sleeve on the reverse idler shaft. The sets of bearings are separated by a snap ring and bearing race retainer spacer. Snap rings, installed in the center of the reverse idler gear, hold the entire assembly in position.

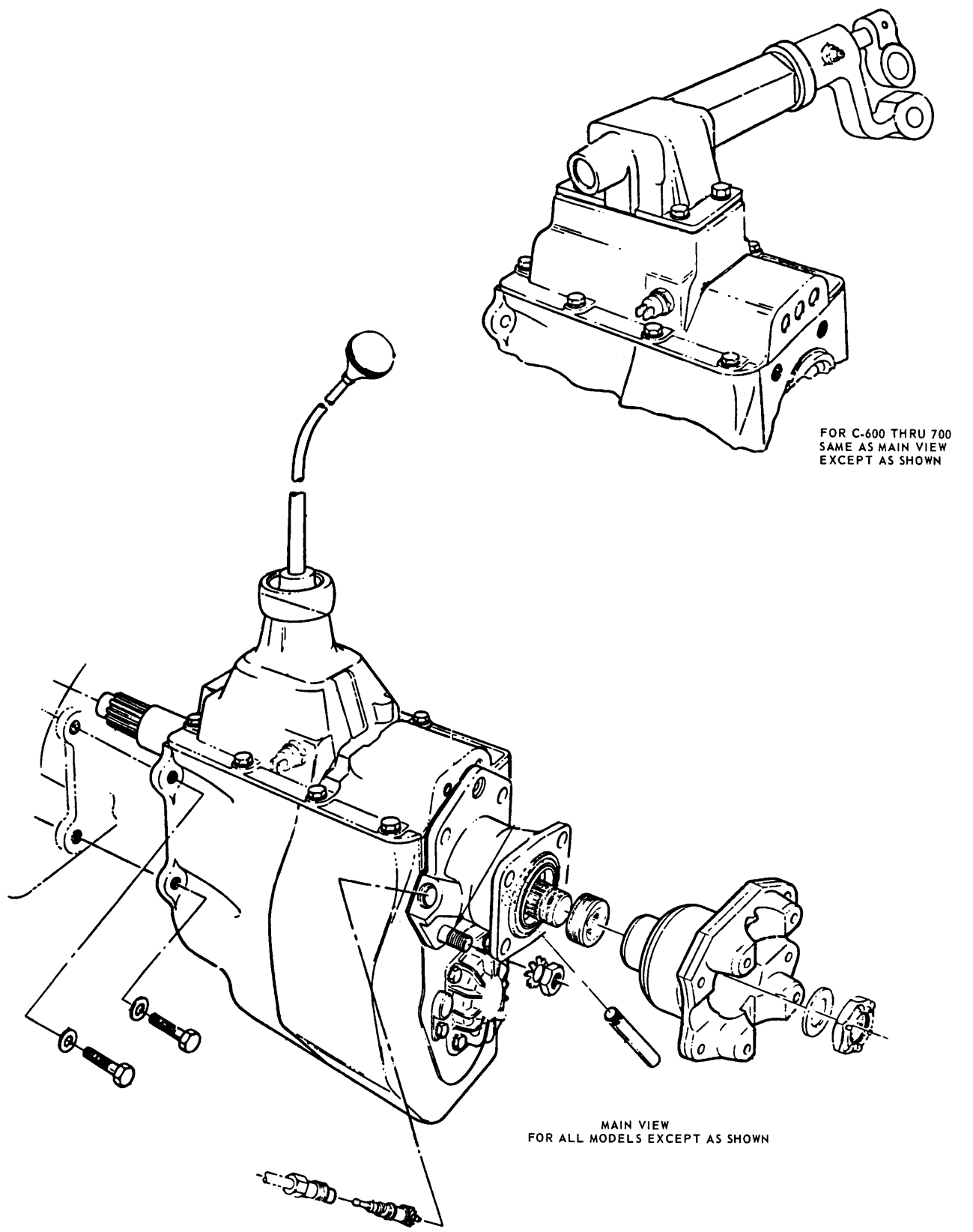

FIG. 1 New Process 435 Four-Speed Transmission

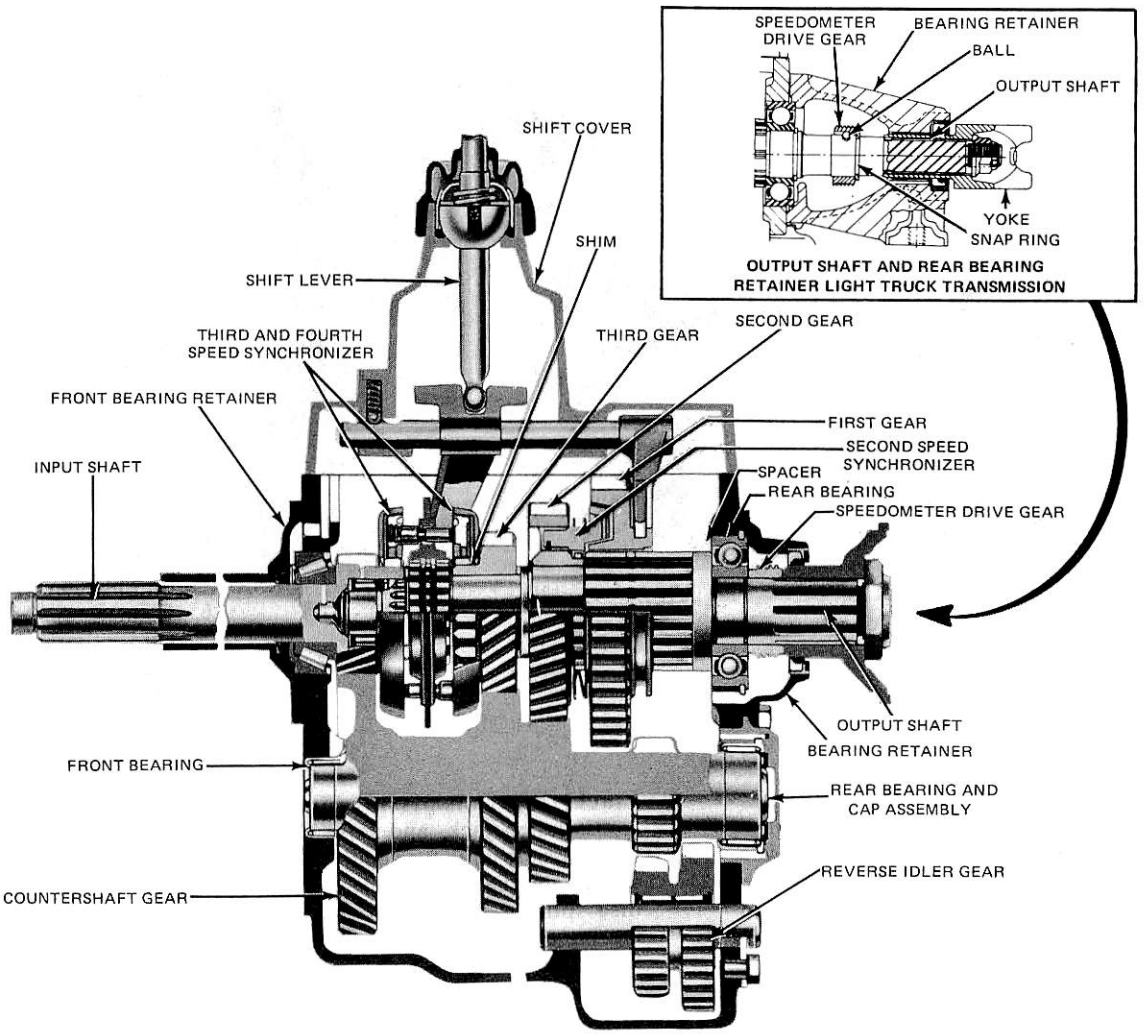

FIG. 2 Transmission Sectional View

REMOVAL AND INSTALLATION

TRANSMISSION

Refer to Figs. 2, 3 and 4 for various installation views.

Removal

1. On F-, LN-or B-Series truck, remove the rubber boot and floor mat.
2. On a F-, LN-or B-Series truck, remove the floor pan transmission cover plate. Remove the weather pad on F-100, F-350. It may be necessary first to remove the seat assembly.
3. Disconnect the back-up light switch located in the rear of the gearshift housing cover.
4. Raise the truck and position safety stands. Position a transmission jack under the transmission, and disconnect the speedometer cable.
5. Disconnect the parking brake lever from its linkage, and remove the gearshift housing. On a C-Series truck, disconnect the parking brake cable and bracket at the transmission.
6. Disconnect the drive shaft or coupling shaft. Remove the bolts that attach the coupling shaft center support to the crossmember and wire the coupling shaft and drive shaft to one side. In F-100-350 Series Trucks, remove the transmission rear support.
7. On C-Series trucks, remove the two transmission upper mounting nuts at the clutch housing (Fig. 3).
8. Remove the transmission attaching bolts at the clutch housing, and remove the transmission.

Installation

Before installing the transmission,

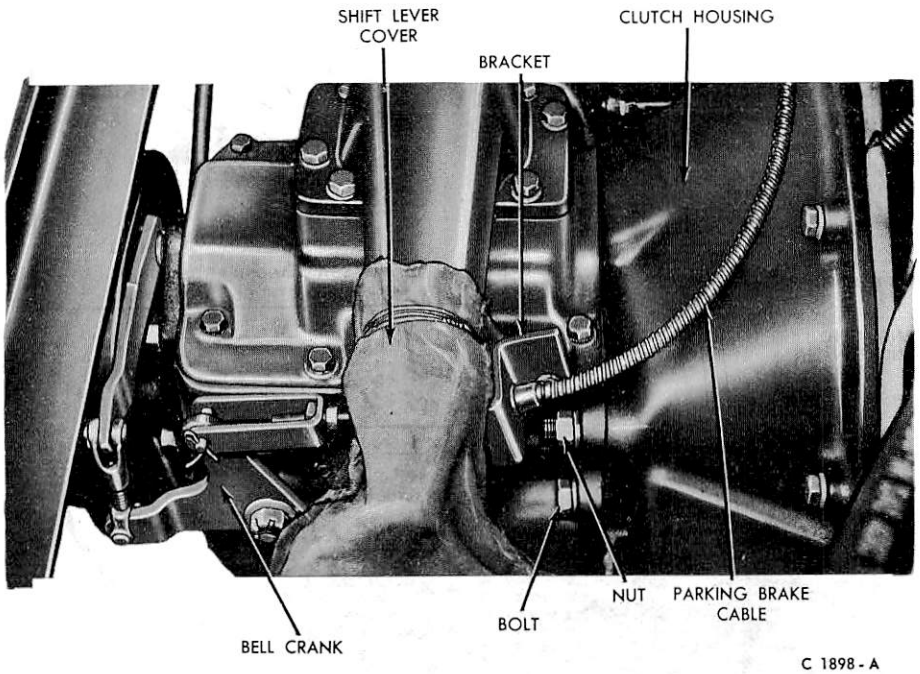

FIG. 3 Transmission Installed—C-Series

apply a light film of lubricant (C1AZ-19590-B) to the release bearing inner hub surfaces and the release lever fulcrum and fork. Care must be exercised to avoid excessive grease contaminating the clutch disc.

1. Place the transmission on a transmission jack, and raise the transmission until the input shaft splines are aligned with the clutch disc splines. The clutch release bearing and hub must be properly positioned in the release lever fork.
2. Install guide studs in the clutch housing and slide the transmission forward on the guide studs until it is in position on the clutch housing. Install the attaching bolts and nuts, and torque them to specifications. Remove the guide studs and install the two lower attaching bolts.
3. Install the bolts attaching the coupling shaft center support to the crossmember. Torque the bolts to specifications.
4. Connect the drive shaft or coupling shaft and the speedometer cable. Torque the U-joint nuts to specification. On F-100-350 Series trucks, install the transmission rear support.
5. Install the gearshift housing and connect the brake to the transmission.
6. Connect the back-up light switch wire.
7. On an F-, LN-or B-Series truck, install the weather pad and the transmission cover plate. Install the seat assembly if it was removed.
8. On an F-, LN-or B-Series truck, install the weather pad, the pad retainer, the floor mat and rubber boot.

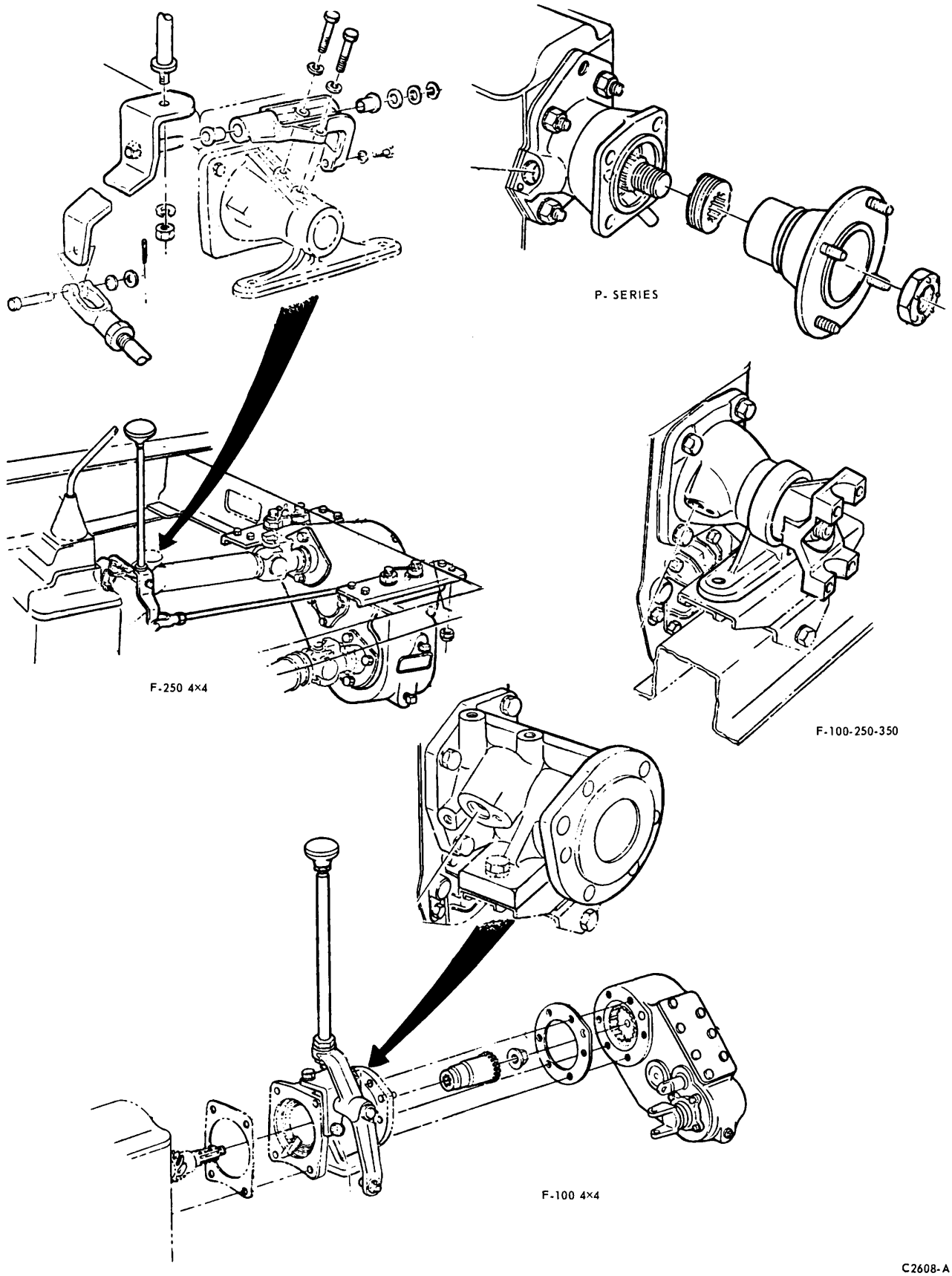

FIG. 4 Light Truck Installations—Model 435 Transmission

DISASSEMBLY AND ASSEMBLY

TRANSMISSION

Disassembly

1. Place the gearshift lever in the neutral position, remove the gearshift cover attaching bolts, and remove the cover.
2. Lock the transmission in two gears, and remove the output flange nut. Remove the parking brake drum brake and flange.
3. Remove the extension housing attaching bolts or nuts. Remove the extension housing from the output shaft.
4. Slip the speedometer drive gear off the output shaft.
5. Remove the front bearing retainer attaching bolts. Remove the retainer and gasket.
6. Rotate the input gear as required to align the notch in the input gear clutch teeth with the countershaft drive gear teeth. remove the input gear and tapered roller bearing from the transmission (Fig. 5).
7. Remove the output shaft bearing (Fig. 6).
8. Remove the roller-type thrust bearing from the front of the main shaft.
9. Slide the third and fourth-speed synchronizer off the output shaft and remove it from the case.
10. Lift the output shaft from the case as shown in Fig. 7.
11. Remove the reverse idler gear shaft retainer from the rear of the case (Fig. 7). Secure the puller T50T0100-A and Adapter T50T-7140-B to the shaft. Hold the gear to prevent it from dropping, and then remove the idler shaft.
12. Position the transmission so the front of the case is facing down. Remove the countershaft gear rear bearing cap attaching bolts. Tap the cap with a soft-faced hammer to free it from the case. Remove the cap, race thrust bearing, and gasket (Fig. 8). Lift the gear from the case.

Assembly

Coat all parts with the specified transmission lubricant to prevent scoring when the transmission is first operated.

1. Place the input shaft on the output shaft and install the complete assembly in a vise as shown in Fig. 9.

Check the distance between the synchronizer and input shaft gear. If the distance is more than 0.043-0.053 inch, install the necessary thickness of shims between the third-speed gear and the synchronizer brake drum. After the proper thickness of shims has been established, remove the input shaft from the output shaft.

2. Position the transmission case with the front facing down.
3. Apply a thin film of grease on the front thrust washer and place it in position in the front of the case. The thrust washer is bored off-center; therefore, make sure that the tangs match the slots in the case boss.
4. Place the countershaft gear in the case.
5. Place the rear thrust bearing and then the bearing race on the rear of the countershaft gear (Fig. 8).
6. Install a new gasket on the bearing cap. Then coat the bore of the bearing cap with grease to retain the roller bearings and insert the bearings. Install the bearing cap on the rear of the case. Torque the attaching bolts to specifications.
7. Install the reverse idler gear in the case with the larger gear toward the rear of the case. Coat the rear of the reverse idler gear shaft with sealer before installing the retainer. Secure the idler shaft retainer with a bolt.
8. Position the output shaft assembly in the case.
9. Place a wood block in the front of the case as shown in Fig. 10. Drive the bearing onto the rear of the output shaft while holding the front of the shaft against the block.
10. Install the rear extension housing on the transmission. Do not install the yoke until the output shaft end play has been checked. On transmissions equipped with a parking brake support, the yoke and retaining nut must be installed before the output shaft end play is checked.
11. Position the input shaft so that the cutaway portion of the clutch teeth is facing down, then position the gear in the case.
12. Install the bearing retainer with no gasket or capscrews.

Using Tool T-64T-7000-A to hold the shaft and retainer concentric, measure the clearance between the retainer and the case (Fig. 11). Install a gasket shim pack 0.010-0.015 inch between the retainer and the case to obtain the required 0.007 to 0.017 inch input shaft end play. After the front retainer bolts have been torqued, recheck the end play.

When the input shaft end play has been established, recheck the synchronizer clearance; it should be 0.050 to 0.070 inch. Adjust the synchronizer clearance if required.

13. Install the parking brake shoes.
14. Lubricate the extension housing bushing and seal and U-*joint flange* with ball joint grease.
15. Install the speedometer drive gear, companion flange, brake drum and the flange attaching nut. Lock the transmission in two gears and torque the nut to specifications.
16. Place the transmission gears in neutral.
17. Install a new cover gasket and the cover.
18. Fill the transmission with lubricant through the speedometer cable attachment opening in the rear bearing retainer until the lubricant reaches the lower level of the regular filler opening.

SUB-ASSEMBLIES

GEARSHIFT HOUSING

Disassembly

1. The shift cover should be disassembled only if it is necessary to replace a shift fork, shift rail, or the cover itself.
2. Slide the boot off the cap (if so equipped).
3. Using special Tool T73T-7220-A, turn the cap counterclockwise and remove the lever from the cover.
4. Remove the back-up lamp switch from the housing (Fig. 13).
5. Remove the roll pin from the first and second-speed shift fork as shown in Fig. 12. Remove the roll pin from the gate in the same manner. To remove the roll pin, the screw extractor should be entered into the pin by tapping lightly on the fabricated handle. The handle should be turned slowly counterclockwise while being tapped. When the screw extractor grips the roll pin stop tapping, pull lightly, and continue turning until the pin is removed.
6. Push the shifter shaft out through the front to force the plug out of the cover. Cover the detent ball access hole in the cover to prevent the ball and the spring from flying out as the shaft clears the hole. Remove the shaft fork and the gate.
7. Remove the third and fourth-speed

shifter shaft in the same manner, then the reverse shifter shaft.
8. Compress the reverse gear plunger and remove the retaining clip. Remove the plunger and the spring from the gate (Fig. 13).

Assembly

1. Assemble the spring on the reverse gear plunger (Fig. 13) and hold it in the reverse shift gate. Compress it in the gate and install the retaining clip.
2. Enter the reverse shifter shaft in the cover and place the detent spring and ball in position. Depress the ball and slide the shifter shaft over it.
3. Install the gate and the fork on the shaft. Install a new roll pin in the gate and in the fork.
4. Apply a film of sealer in the plug seat at the front of the cover. Install a new plug in the reverse shifter shaft bore.
5. Place the reverse fork in the neutral position.
6. Install the two interlock plungers in their bores (Fig. 13).
7. Insert the interlock pin in the third and fourth-speed shifter shaft. Install the shaft in the same manner as the reverse shifter shaft mechanism.
8. Install the first and second-speed shifter shaft in the same manner making sure that the interlock plunger is in place.
9. Lubricate the spherical ball seat. Position the shift lever and cap in place.
10. Install the back-up lamp switch and T.R.S. switch and torque to specifications.

COUNTERSHAFT GEAR FRONT BEARING

Disassembly

1. Drive the countershaft gear front bearing from the case. The bearing can be driven out from the outside of the case. Do not lose any roller bearings when the cage is pressed out.

Assembly

1. Carefully press the bearing into the case until the cage is flush with the front of the case. Retain the roller bearings in the bearing cage with grease.

COUNTERSHAFT GEAR REAR BEARING

1. Position the transmission so the front of the case is facing down.
2. If uncaged bearings are re-used the loose rollers (or needles) can be held in place with a suitable grease. This is not required with the caged type used for service replacement. Position the bearings in the cap.
3. Position the race thrust bearing and the cap. Torque the attaching bolts to specification.

INPUT SHAFT BEARING RACE

Disassembly

1. Pull the bearing race from the front bearing retainer with Puller T50T-100-A and OTC-943.

Assembly

1. Press a new race into the front bearing retainer with the tool shown in Fig. 14.

INPUT SHAFT SEAL

Disassembly

1. Pull the input shaft seal (Fig. 5) with Tool T58L-101-A and slide hammer Tool T50T-100-A.

Assembly

1. Press a new seal into place in the retainer making sure that the lip of the seal is toward the mounting surface.

INPUT SHAFT BEARING

Disassembly

1. Remove the tapered roller bearing from the input shaft with Tool T64T-7025-A and T54T-4625-B1.

Assembly

1. Position Tool 4261-BA in an Arbor Press as shown in Fig. 15. Place a wood block on the input gear and press the gear into the bearings until it contacts the bearing inner race.

INPUT SHAFT ROLLER BEARINGS

Disassembly

1. Remove the snap ring and retaining washer from the shaft.
2. Remove the bearings from the input shaft bore.

Assembly

1. Coat the bore of the input shaft gear with a thin film of grease.
2. Install the 14 roller bearings in the bore of the input shaft. Slide the final roller axially into place. Secure the bearings with the retaining washer and the snap ring.

REVERSE IDLER GEAR BEARINGS

On F-100-350 and P-Series production gears, an idler gear and an integral bronze bushing is used (Fig. 5). For service replacement of the reverse idler gear on these models the gear and roller bearings are to be used, the same as on other models. The service reverse idler gear and bearings are serviced only as an assembly. Once the bearing lock ring snaps into place it cannot be removed without destroying either the gear or the bearing.

FIRST-SPEED GEAR

Disassembly

1. Remove sliding first-speed gear and output shaft from the transmission.
2. Mark the gear and output shaft so the gear and shaft splines can be assembled in the same position. Remove the gear from the output shaft. Do not lose the spline springs.

Assembly

1. **If a new gear and/or shaft is being installed, select-fit the gear to the shaft for the best sliding action. Do the same if the first speed gear has been sticking on the shaft splines.** Position the spline springs on the coast side of the spline teeth of the slider gear. To facilitate assembly, use a daub of grease to retain the springs on the sides of the spline teeth. Two notches have been machined on the hub of the slider gear to identify the location of the relieved splines.
2. Place the new slider gear assembly in its position on the output shaft.

SECOND-SPEED GEAR

Disassembly

1. Slide the third-speed gear, first-speed gear stop, and the first-speed gear off the output shaft. Do not lose the slider gear springs.
2. Carefully pry up on one end of the two piece snap ring and remove it from the shaft.**If any damage to the ring results from this, it should not be re-used.**
3. Slide the second-speed gear and synchronizer brake off the shaft.
4. Remove the snap ring from the synchronizer brake pins. Separate the brake and spring from the second-speed gear.

Assembly

1. Assemble the spring and synchronizer brake to the second-speed gear. Secure the brake with the snap ring making sure that the snap ring tangs are away from the gear.
2. Slide the second-speed gear onto the front of the output shaft making sure that the synchronizer brake is toward the rear. Secure the gear to the shaft with the two piece snap ring.
3. Slide the spring loaded first-speed gear and the gear stop (Fig. 5) onto the rear of the shaft.
4. Slide the third-speed gear, synchronizer shim (if required) and the third and fourth-speed synchronizer and the roller type thrust bearing on the front of the shaft.

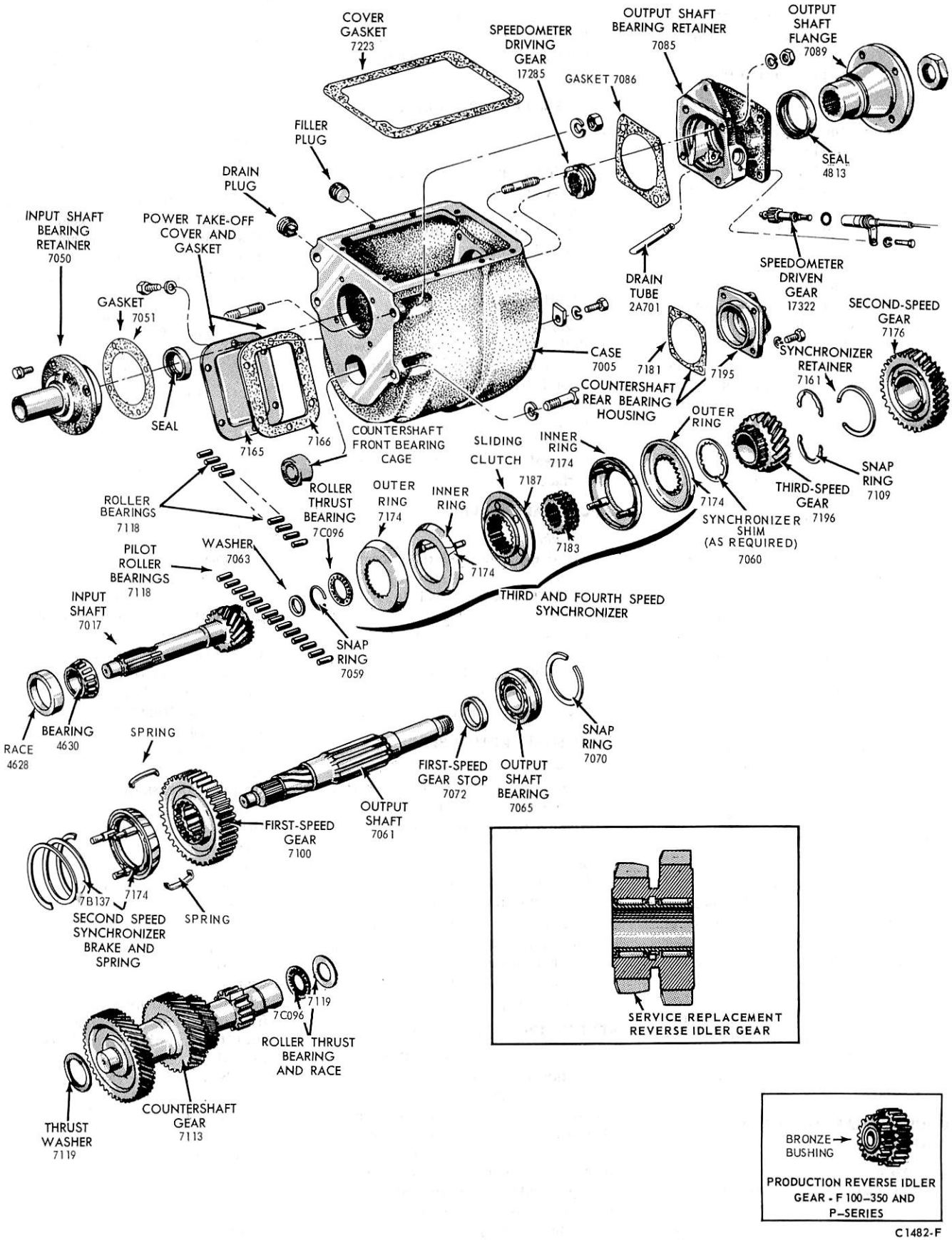

FIG. 5 Transmission Disassembled

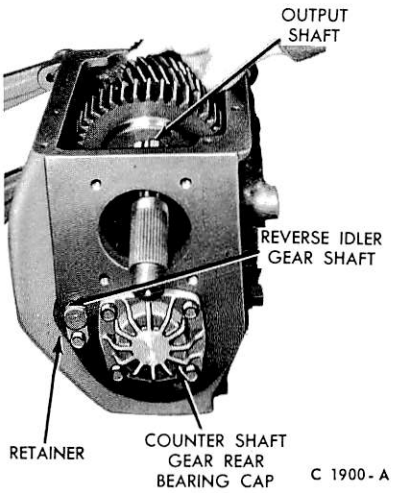

FIG. 6 Removing Output Shaft Bearing

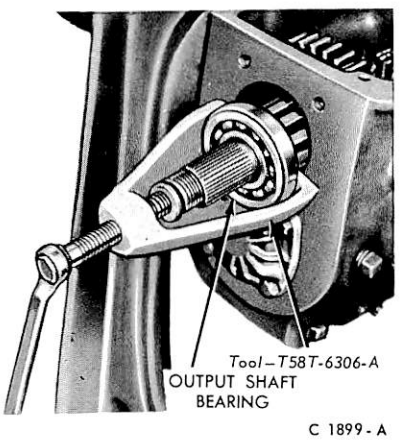

FIG. 7 Removing Output Shaft

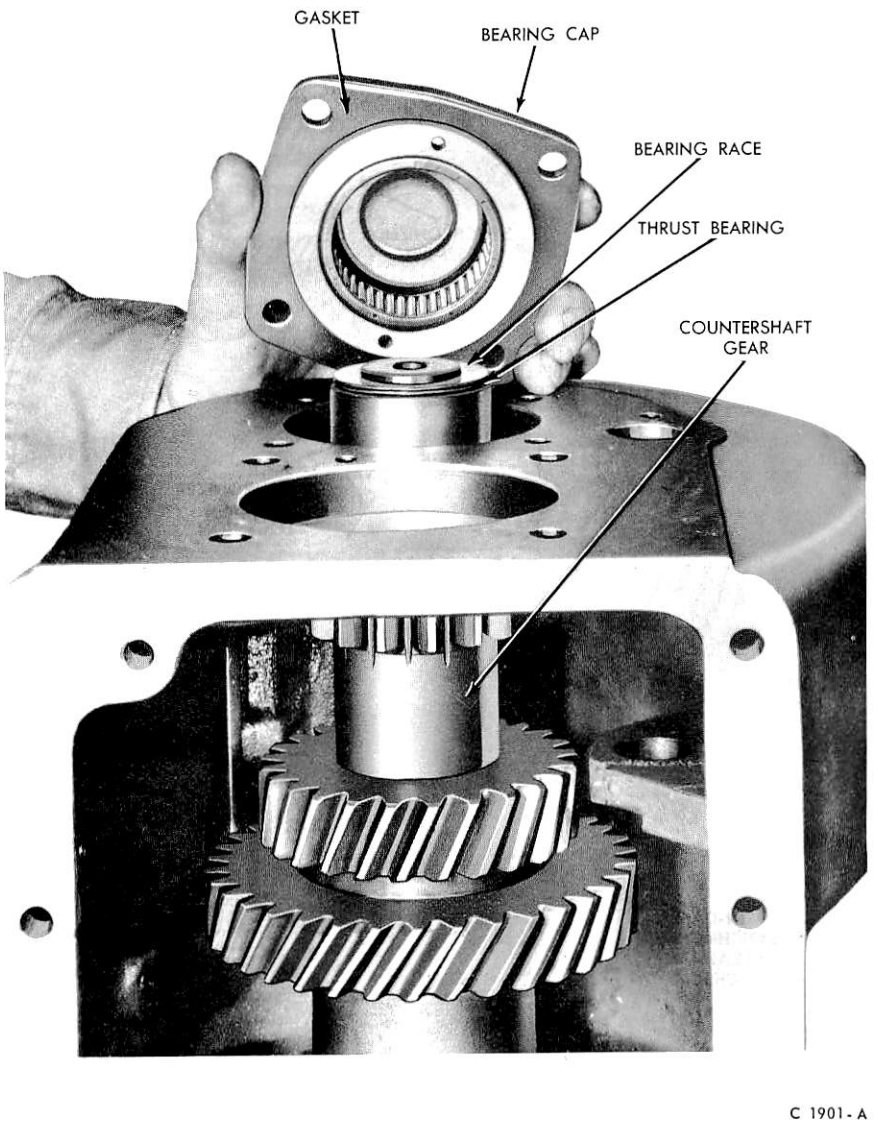

FIG. 8 Removing or Installing Countershaft Rear Bearing

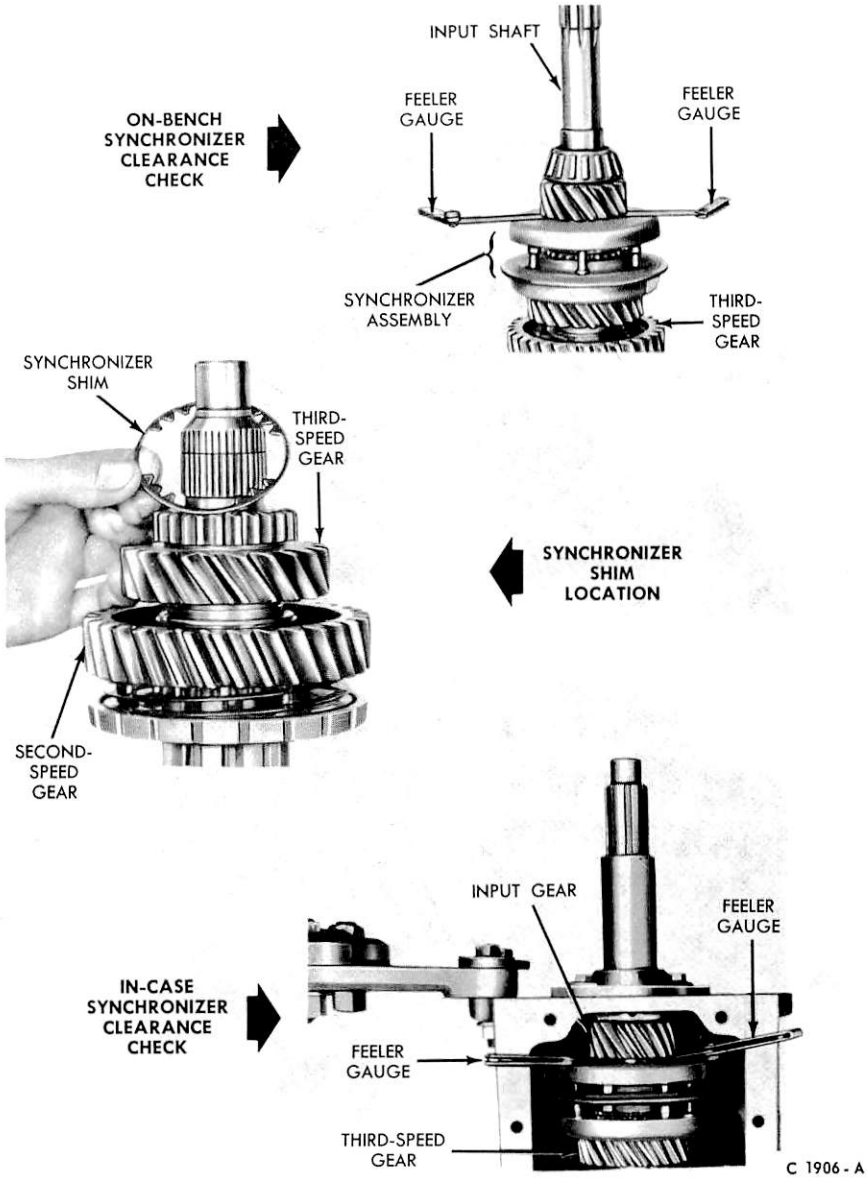

FIG. 9 Measuring Input Shaft-To-Synchronizer Clearance

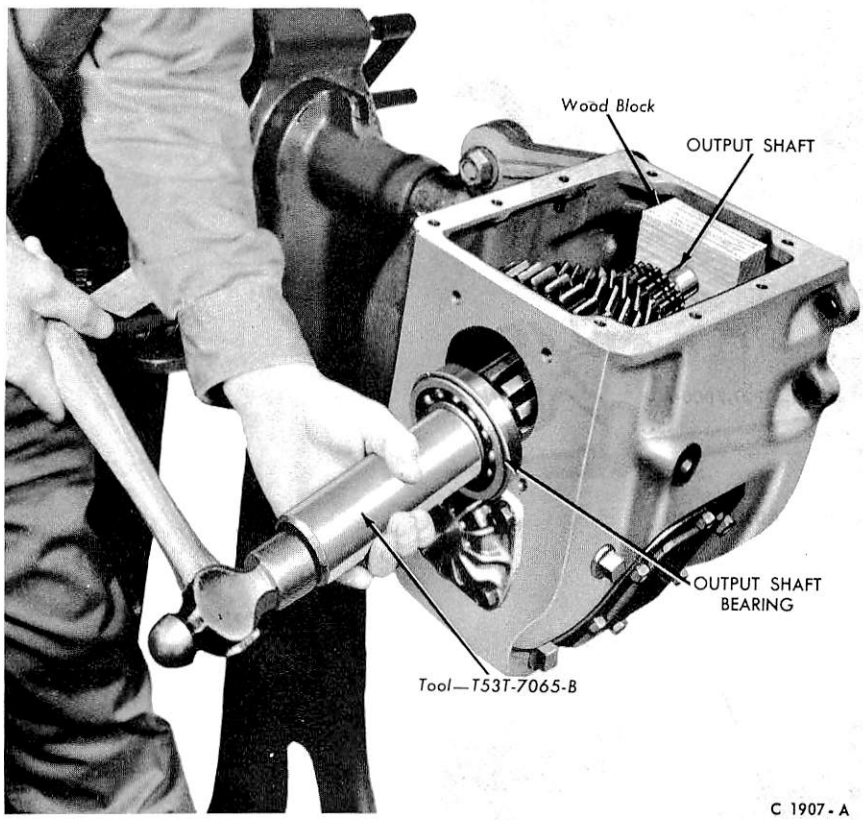

FIG. 10 Installing Output Shaft Rear Bearing

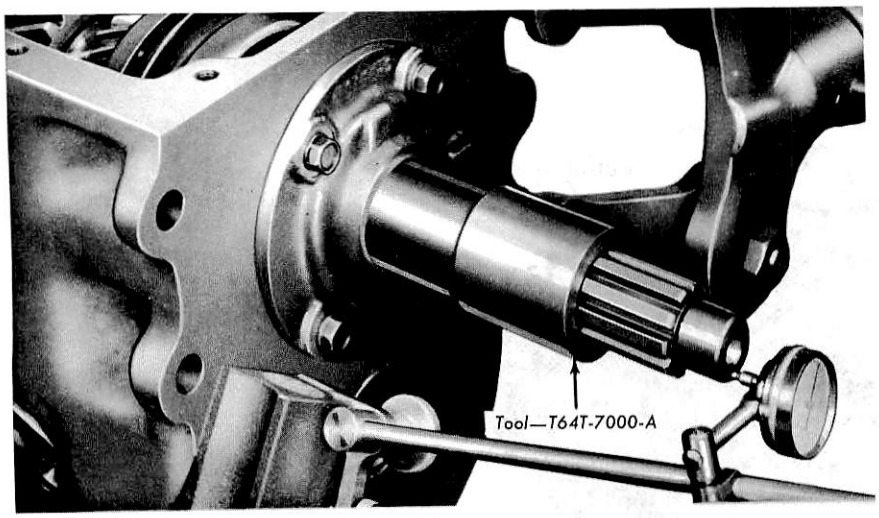

INPUT SHAFT BEARING END PLAY ADJUSTMENT

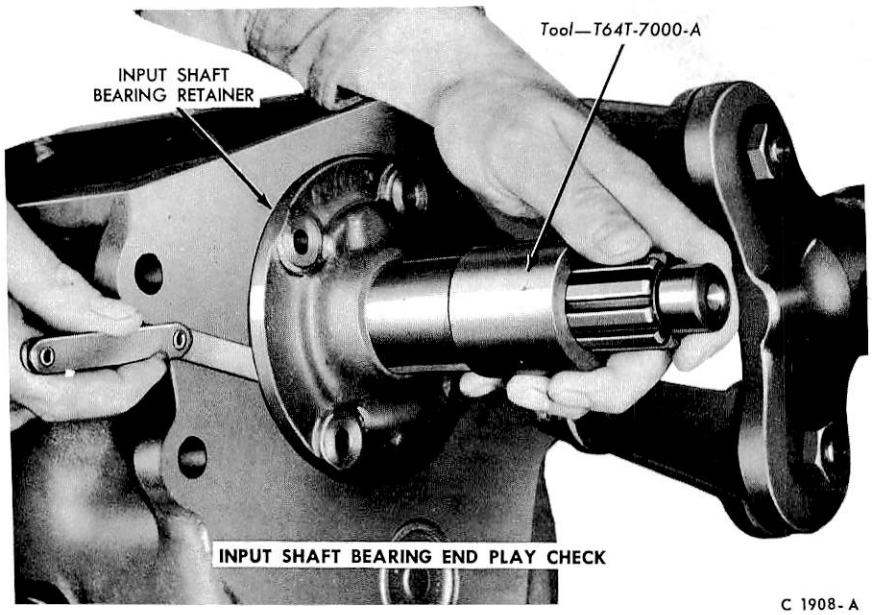

FIG. 11 Checking Input Shaft End-Play

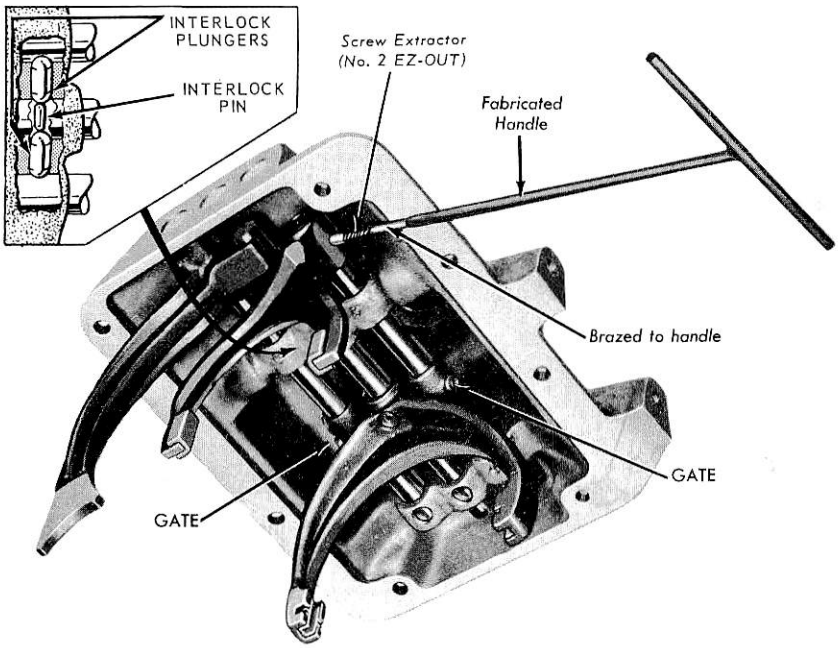

FIG. 12 Removing shift Fork Roll Pin

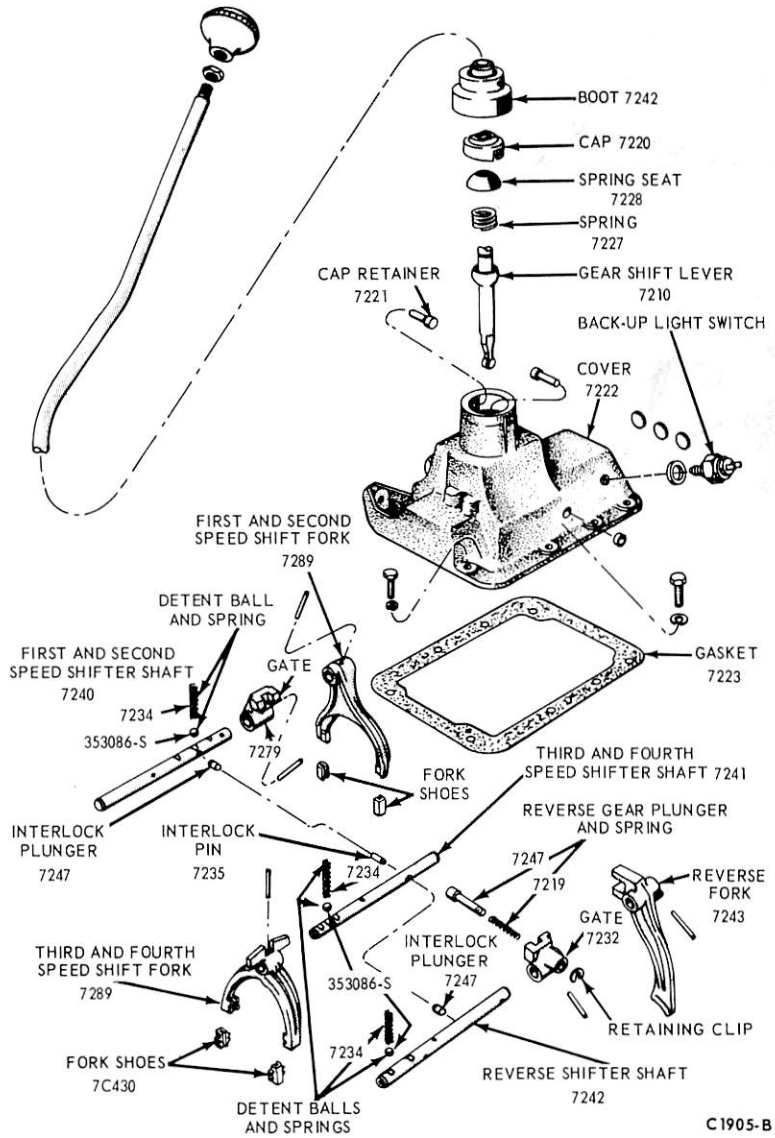

FIG. 13 Gearshift Cover Disassembled

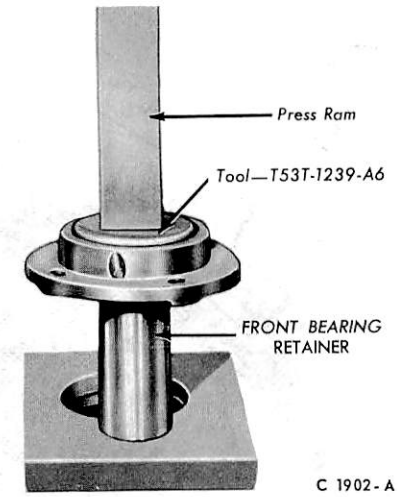

FIG. 14 Installing Front Bearing Race

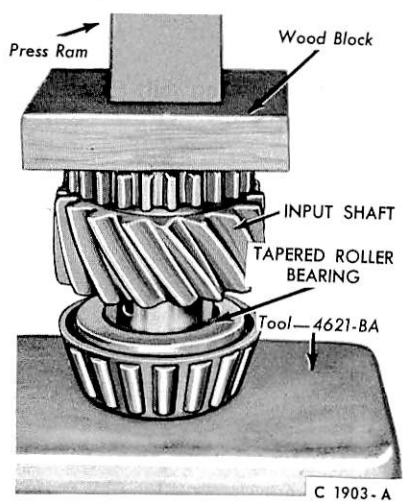

FIG. 15 Installing Input Shaft Bearing

SPECIFICATIONS

APPROXIMATE LUBRICANT REFILL CAPACITY (PINTS)

Transmission	US	IMP
New Process 435 (SAE 50 Engine Oil) (ESE-M2C39-A)	6.75	5.9

CC2227-B

GENERAL TORQUE GUIDE-(FOOT POUNDS)

Bolts	Torque Limits
Bearing Retainer to Transmission (Aux.)	5/8–18, 115-140
	1/2–13, 60-80
Bearing Retainer to Trans. (Main W/O Aux.)	1/2–13, 60-80
	5/8–11, 120-150
Bellcrank to Trans.	3/8–16, 25-32
Bellcrank Bracket to Transmission	3/8–16, 25-32
	9/16–12, 120-150
Clutch Housing to Engine Block	7/16–14, 33-45
Clutch Housing to Transmission Case	7/16–14, 40-50
	5/8–11, 120-150
	9/16–12, 90-115
	5/8–18C, 120-150
	9/16–18C, 90-115
Clamp Trunnion to Aux. Transmission	1/2–20, 50-55
	1/2–20, 60-70
Countershaft & Reverse Idler Shaft Retainer	1/2–13, 60-70
	5/16–18, 25-30
	3/8–16, 25-37
	3/8–16, 18-25
	7/16–14, 40-45
	1/2–13, 80-85
Gear Shift Lever Tower to Gearshift Housing	3/8–16, 20-25
	5/16–18, 11-16
	7/16–14, 30-45
Insulator Trans. to Frame Support	5/8–11, 96-120
Input Shaft Bearing Retainer to Trans. Case	5/16–18, 25-30
	3/8–16, 25-30
	7/16–14, 40-45
Output Shaft Bearing Retainer to Trans. Case	3/8–16, 20-25
	7/16–14, 30-38
	1/2–13, 50-62
	5/8–11, 96-120
Parking Brake to Trans. Bearing Retainer	1/2–20C, 45-55
	5/8–18, 180-220
	7/16–20, 50-70
Rear Cross Shaft Housing to Adapter or Trans. Assy.	7/16–14, 30-38
Remote Trans. Control Bracket to Frame	9/16–12, 110-130
Remote Trans. Control Bracket to Upper Shift Control	7/16–14, 26-32
Trans. Support Bracket to Transmission	3/8–16, 20-25
	5/8–11, 135-165

Bolts (Cont'd)	Torque Limits
Trans. Support Bracket to Transmission (Cont'd)	7/16–14, 53-65
Trans. Support Bracket and Bearing Retainer to Transmission	5/8–11, 96-120
	5/8–18, 115-140
Trans. Front Support Bracket and Trunnion to Transmission	5/8–11, 135-165
Trunnion Clamp to Bearing Retainer	1/2–20, 50-62
Nuts	**Torque Limits**
Adjusting Height Main Trans.	150-200
Bellcrank to Trans.	9/16–18, 70-90
	3/8–16C, 20-25
Bearing Retainer to Trans. (Main W/O Aux.)	1/2–20, 50-62
	5/8–18, 115-140
Drum Parking Brake to Companion Flange	3/8–24, 37-50
	7/16–20, 40-55
	1/2–20, 74-86
Handbrake Anchor Bar to Trans. Case (except 5-Speed Extra-Heavy Duty)	9/16–18, 100-110
Handbrake Drum to-U-Joint Flange (Engine End)	7/16–20, 45-50
	1/2–20, 75-80
	3/8–24, 30-35
Input Shaft Yoke to Aux. Trans.	1 1/4–18, 500-550
Insulators–Transmission Rear Support to Frame Brackets	3/4–16, 75-100
Insulator–Trans. Mounting Brackets to Trans. Support Bracket–Rear	3/4–16, 90-110
Insulator–Aux. Trans. to Frame Brackets	3/4–16, 195-235
	7/16–20, 40-55
	7/8–14, 150-200
Output Flange to Shaft (4-Speed Aux. Trans.)	500-550
Parking Brake Support and Transmission Support to Transmission	5/8–18, 115-140
Rear Support Plate to Trans. Aux. Case	5/8–18, 115-140
U-Joint Flange to Trans. Output Shaft	1.00–20, 250-300
	1 1/4–18, 500-550
	1 1/2–18, 550-600
Bolt and Nut	**Torque Limits**
Adjusting Height Auxiliary Trans.	150-200
Bellcrank Bracket to Crossmember	3/8–16, 20-25
	3/8–24, 24-30
Bellcrank to Mounting Bracket	9/16–18, 100-120
Brake Support Plate to Trans. Support Plate	1/2–20, 58-72
Insulator-Adjusting Studs to C/M	3/4–16, 195-235
Trans. Frame Brackets Mounting to Frame	1/2–20, 58-72
Trans. to Support Bracket–Rear	7/8–14, 150

CC 1040-C

PART 16-26 New Process 542 Five-Speed Transmission

Applies to: F-500-750 Models Only

COMPONENT INDEX	Page	COMPONENT INDEX	Page
SPECIFICATIONS	26-07	Disassembly	26-03
SUB-ASSEMBLIES		Output Shaft	
Countershaft		Assembly	26-03
Assembly	26-03	Disassembly	26-03
Disassembly	26-03	TRANSMISSION ASSEMBLY	
Gearshift Housing		Assembly	26-02
Assembly	26-03	Description	26-01
Disassembly	26-03	Disassembly	26-02
Input Shaft		Installation	26-02
Assembly	26-03	Removal	26-02

DESCRIPTION

TRANSMISSION

The Model 542 (Fig. 1) is a synchromesh transmission. The mainshaft gears, except first-speed gear, are helical type and are in constant mesh with mating gears on the countershaft. The first and reverse gears have straight cut spur-type teeth. Two synchronizer mechanisms are used for smooth shifting without gear clash.

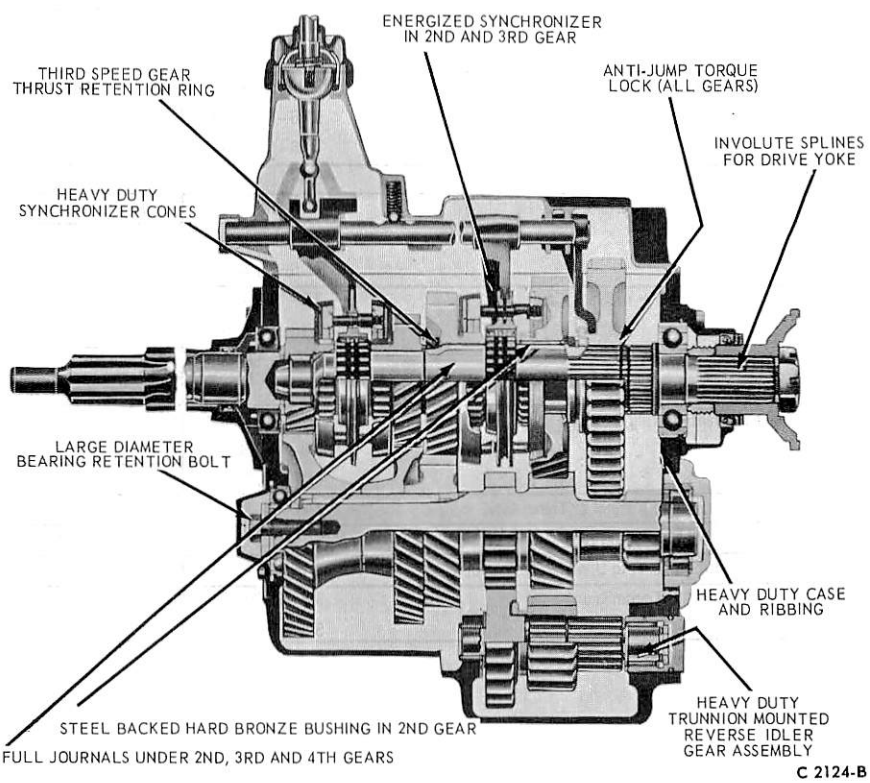

FIG. 1 New Process 542 Four-Speed Transmission

REMOVAL AND INSTALLATION

TRANSMISSION

Removal

1. Remove the floor mat and the floor plate. Loosen the two nuts that secure the top of the transmission to the clutch housing studs.

If the vehicle is not raised on a hoist, it may be necessary to remove the parking brake lever before the transmission can be removed. Remove the shift lever using special Tool T73T-7220-A.

2. Drain the transmission. Disconnect the drive shaft (or the coupling shaft) at the parking brake drum. If the vehicle is equipped with a coupling shaft support, disconnect the support bracket, and remove the coupling shaft.
3. Disconnect the parking brake adjusting rod, and disconnect the speedometer cable.
4. Remove the dust cover from the bottom of the clutch housing. Position a transmission jack under the transmission. Remove the top nuts, and the bottom bolts and lock washers that secure the transmission to the clutch housing.
5. Move the transmission rearward until the input shaft splines clear housing. Be careful that the clutch release bearing and hub do not drop out of the release lever fork. Lower the transmission to the floor.

Installation

1. Place the transmission on a transmission jack, and raise the transmission until the input shaft splines are aligned with the clutch disc splines. The clutch release bearing and hub must be properly positioned in the release lever fork. Slide the transmission forward until it is in position on the clutch housing.
2. Install the lock washers, the top nuts, and the bottom bolts, and torque the bolts and nuts to specifications. Install the dust cover on the bottom of the clutch housing. Connect the speedometer cable.
3. Connect the parking brake adjusting rod.
4. Install the coupling shaft in the support bracket, and connect the support bracket to the support plate. Connect the coupling shaft (or the drive shaft) at the transmission. Install the shift lever using special Tool T73T-7220-A.
5. Lower the vehicle to the floor, and install the floor plate and the floor mat. Fill the transmission to the correct level with the proper lubricant.
6. Check the clutch pedal free travel, and adjust it if necessary.

DISASSEMBLY AND ASSEMBLY

TRANSMISSION

Disassembly

1. Shift the transmission into second gear, and remove the gear shift cover attaching bolts. Raise the cover and turn the output shaft to position one of the second and third-speed blocking ring pins directly over the center of the output shaft (Fig. 2). While lifting the cover off the case, rotate it slowly in a clockwise direction and tilt it toward the right side of the transmission case. Push the low sliding gear backward to clear the fork.
2. Lock the output shaft by shifting the transmission into two gears at one time and remove the output shaft nut. Remove the parking brake drum and spline flange. Disconnect the brake actuating lever, and remove the brake shoe assembly. Remove the bearing retainer and the speedometer gear.
3. Remove the retaining snap ring from the input shaft bearing outer race and remove the input shaft and bearing from the case. Remove the snap ring and washer retaining the output shaft pilot roller bearings in the input shaft bore and remove the roller bearings.
4. Remove the output shaft bearing (Fig. 3). Slide the output shaft toward the rear of the case, and remove the front synchronizer blocking rings and sleeve. Remove the shims from the fourth-speed gear. Remove the output shaft assembly from the case.
5. Remove the reverse idler shaft lock plate, and tap the front of the idler shaft until the retainer can be removed from the case. Remove the thrust bearing from the rear of the shaft and the thrust washer and O-ring from the retainer. Remove the shaft and front bearing from the case (Fig. 2).
6. Remove the four countershaft rear bearing and retainer cap bolts. Remove the countershaft front bearing retainer and gasket. Remove the front bearing attaching bolt. With a drift, drive the countershaft through the front bearing toward the rear, until the countershaft rear bearing and retainer cap comes out of the case. Remove the bearing and cap from the countershaft. Lift the countershaft assembly out of the case. Remove the thrust washer from the front of the countershaft. Remove the countershaft front bearing from the case.

Assembly

1. Install the snap ring on the countershaft front bearing outer race, and tap the bearing into the case. Install the front bearing outer retainer without a gasket. Place the thrust washer (spacer) on the front of the assembled countershaft, and place the countershaft in the front bearing. Tap the countershaft from the rear until the thrust washer (spacer) bottoms on the front bearing. Install the countershaft rear bearing and retainer cap, and gasket. Torque the bolts to specifications. Remove the countershaft front bearing outer retainer. Install the inner retainer that holds the countershaft on the bearing inner race. Torque the inner retainer bolt to specifications. Install the front bearing outer retainer and gasket. Tighten the retainer bolts to specifications.
2. Place the idler gear on the idler shaft

with the shift fork groove toward the front. Install the thrust washer on the front of the idler shaft with the tang toward the front. Place the shaft and gear in the case, aligning the thrust washer tang with the slot in the case. Install the thrust bearing on the rear of the idler shaft and the thrust washer in the rear bearing retainer. Place a new O-ring in the retainer groove. Install the rear bearing retainer, lock and bolt.

3. Install the output shaft assembly in the case. Place a hardwood block at the front of the output shaft, and drive the output shaft bearing onto the shaft, using the tool shown in Fig. 4.

Remove the hardwood block, and install the fourth and fifth-speed synchronizer. Drive the output shaft bearing into the case with the tool shown in Fig. 4.

4. Using a driver, install the input shaft and bearing in the case. Shift the transmission into two gears, at one time and install the bearing attaching nut. Stake the nut. Install the input shaft bearing retainer without a gasket. Tighten the retainer bolts only enough to bottom the retainer on the bearing snap ring. With a feeler gauge, check the clearance between the bearing retainer and case. This clearance should be 0.003-0.006 inch.

Remove the retainer, and select a gasket pack which will insure a seal at the outer edge of the retainer and at the same time eliminate end play between the retainer and bearing outer race snap ring. Torque the bolts to specifications.

5. Install the spacer and speedometer gear on the output shaft. Check the output shaft bearing retainer oil seal. Replace if damaged, making sure that the open face of the seal faces the transmission (Fig. 2). Place a new gasket on the retainer, and install the retainer on the case. Torque the bolts to specifications.
6. Install the parking brake shoe assembly. Position the universal joint flange and brake drum on the output shaft. After shifting the transmission into 2 gears at one time, install the output shaft nut and torque to specifications. When lining up the cotter pin holes, always tighten the nut.
7. Shift the transmission into fourth gear. With 2 feeler gauges, check the clearance between the fourth-speed synchronizer outer ring and the fourth-speed gear (Fig. 5). Position the synchronizer so that one pin is directly above the center of the output shaft, and do not rock the synchronizer while making this check. If the clearance is not between 0.050 and 0.070 inch, change the shim which was installed on the front side of the fourth-speed gear. Shims are available in the following thickness: 0.009-0.011, 0.014-0.016 inch.
8. Shift the second and third-speed synchronizer into second gear. Shift all other gears into neutral. Shift the second and third-speed shifter fork into second gear.
9. Place a new gasket on the gear shift cover, and install it on the case. **There are two special bolts that fasten the gear shift housing to the case. They are locating bolts and are installed, one on each side of the housing at the second hole from the front. Install these and the remaining bolts, and torque to specifications.**
10. Install and adjust the parking brake assembly.

SUB-ASSEMBLIES

OUTPUT SHAFT

Disassembly

1. Remove the snap ring at the front of the output shaft (Fig. 2), and remove the synchronizer hub and fourth-speed gear.
2. Using snap ring pliers, remove the snap ring at the front of the third-speed gear. Remove the gear and thrust washer. Remove the second and third-speed synchronizer. Slide the low and reverse sliding gear off the rear of the output shaft.
3. Remove the second-speed gear.

Assembly

1. Slide the second-speed gear onto the output shaft. Install the washer and the retaining snap ring.
2. Slide the low and reverse sliding gear onto the output shaft, with the fork groove toward the front. Install the second and third-speed synchronizer (Fig. 2) with the long hub on the sliding clutch toward the front of the shaft.
3. Install the third-speed gear on the output shaft, with the clutch teeth toward the rear. Install the washer snap ring.
4. Place the fourth-speed gear on the output shaft, with the clutch teeth toward the front. Slide the shims over the fourth-speed clutch teeth. Place the fourth and fifth-speed synchronizer clutch hub on the output shaft, with the oil slots toward the rear. Install the snap ring that retains the synchronizer hub. Check the clearance between the snap ring and hub. Maximum clearance is 0.0003 inch. Replacement snap rings are available in the following thicknesses: 0.086-0.088, 0.089-0.091, 0.092-0.094, 0.095-0.097 inch.

COUNTERSHAFT OR GEARS

Disassembly

If any of the countershaft gears are to be replaced, press the gears off the shaft.

Assembly

Apply lubricant to the gear bores, and press the gears onto the countershaft.

INPUT SHAFT OR BEARING

Disassembly

If the input shaft bearing is to be replaced use Tool T53T-7065-A (Fig. 6) to remove the bearing from the shaft.

Assembly

Press the bearing onto the input shaft. Place the output shaft pilot roller bearings in the input shaft and install the retainer and snap ring.

GEAR SHIFT COVER

Disassembly

1. Mount the cover in a bench fixture or soft-jawed vise. Mark each fork and gate for location at assembly (Fig. 7). Shift all the shifter shafts into neutral position.
2. With a punch, drive the four expansion plugs out of the housing (Fig. 8).
3. **With a screw extractor, remove the pins that hold the forks and gates on the shifter shafts.**
4. Insert a pin punch in any one of the shifter shaft pin holes and slide the shaft through the rear of the housing. As the shaft clears the front support, catch the detent ball and spring. Mark the end of the shifter shaft to insure proper assembly. The remaining shafts may be removed in the same manner.

Assembly

1. Install the reverse shifter shaft detent ball and spring in the housing. Install the reverse shifter shaft, fork and gate.
2. Place the interlocking balls in the housing. Install the remaining shifter shafts, forks, gates, and detent balls. The interlocking pins must be installed in the center shafts (Fig. 9).
3. Check the operation of the interlocking system. Install the retaining pins in the forks and gates.

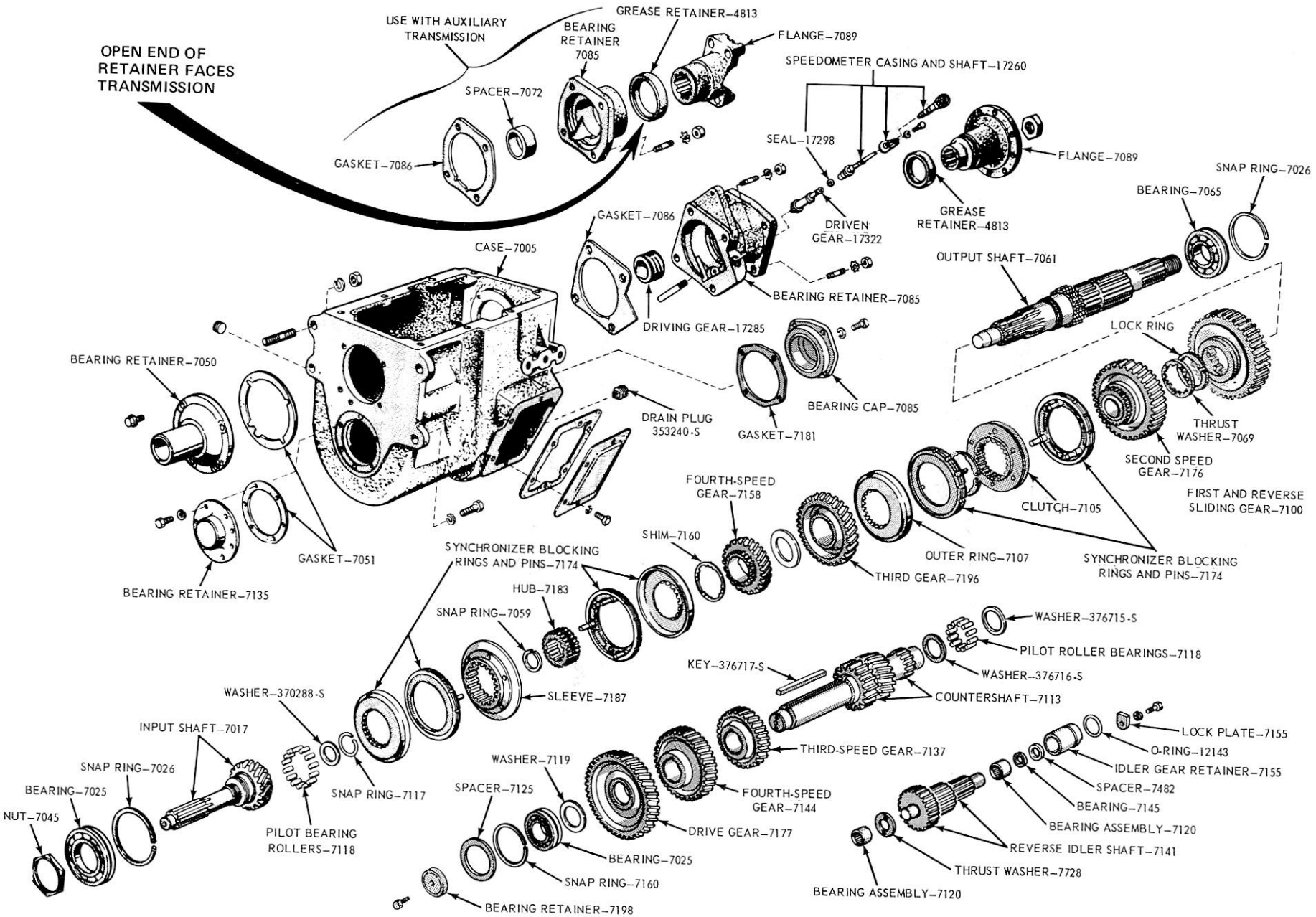

FIG. 2 Transmission Disassembled

4. Coat the outer edges of new expansion plugs with an oil-resistant sealer, and install them in the housing. Expand the plugs with a flat faced bar or punch by striking them in the center.
5. Check the operation of the interlock system by moving one outside rail. If the opposite outside rail can be moved, the system is not operating.

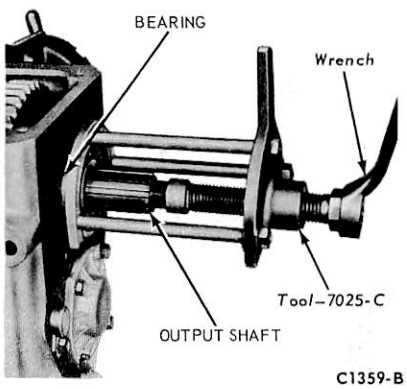

FIG. 3 Removing Output Shaft Bearing

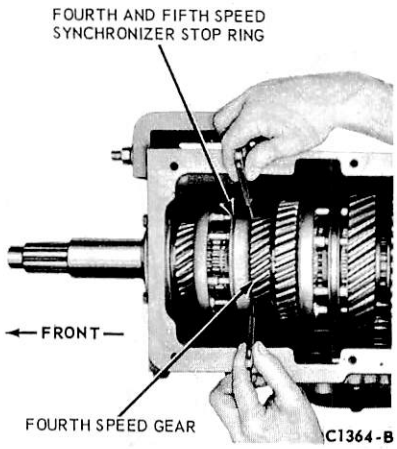

FIG. 5 Checking Synchronizer Clearance

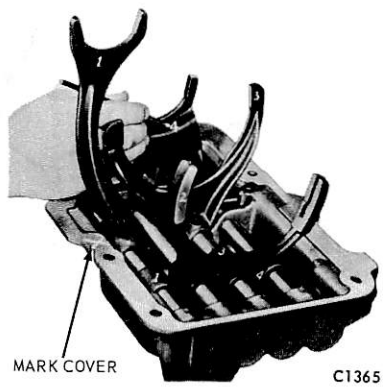

FIG. 7 Marking Shifter Fork and Gate

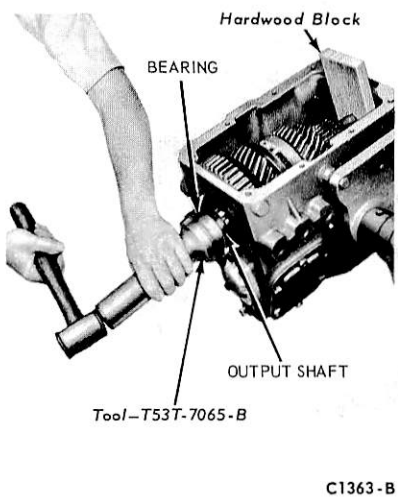

FIG. 4 Installing Output Shaft Bearing

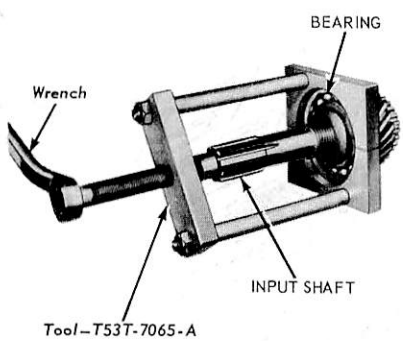

FIG. 6 Removing Input Shaft Bearing

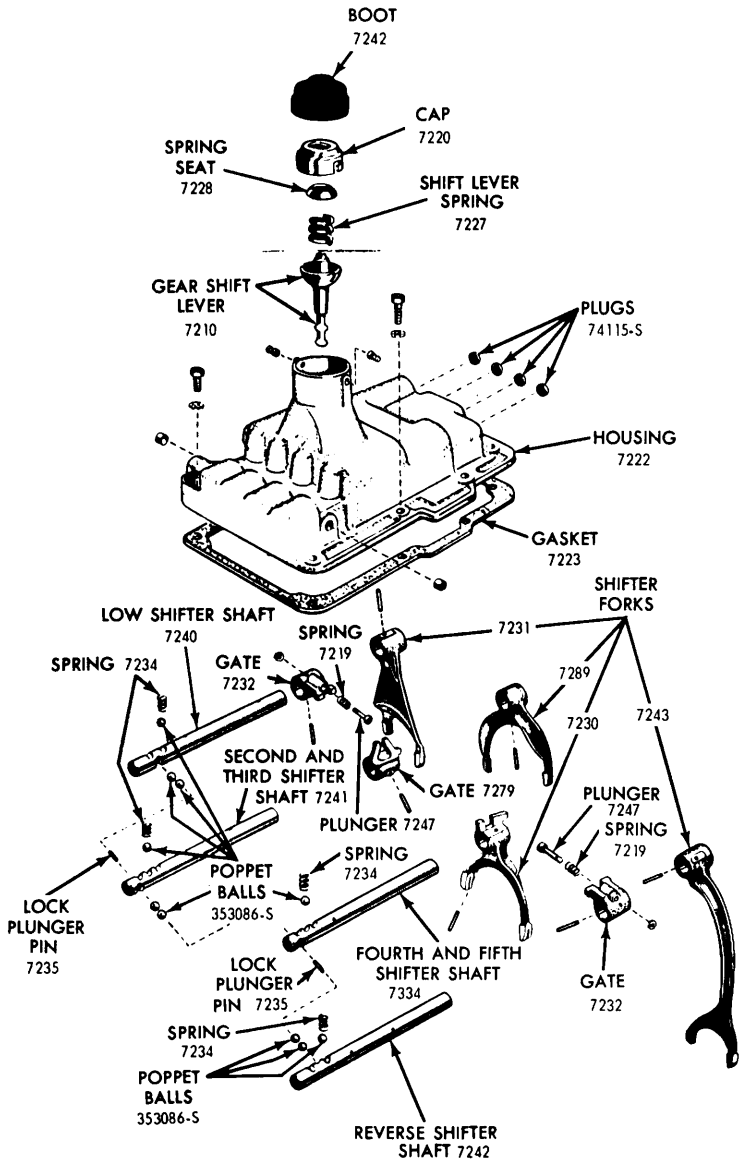

FIG. 8 Gear Shift Cover Disassembled

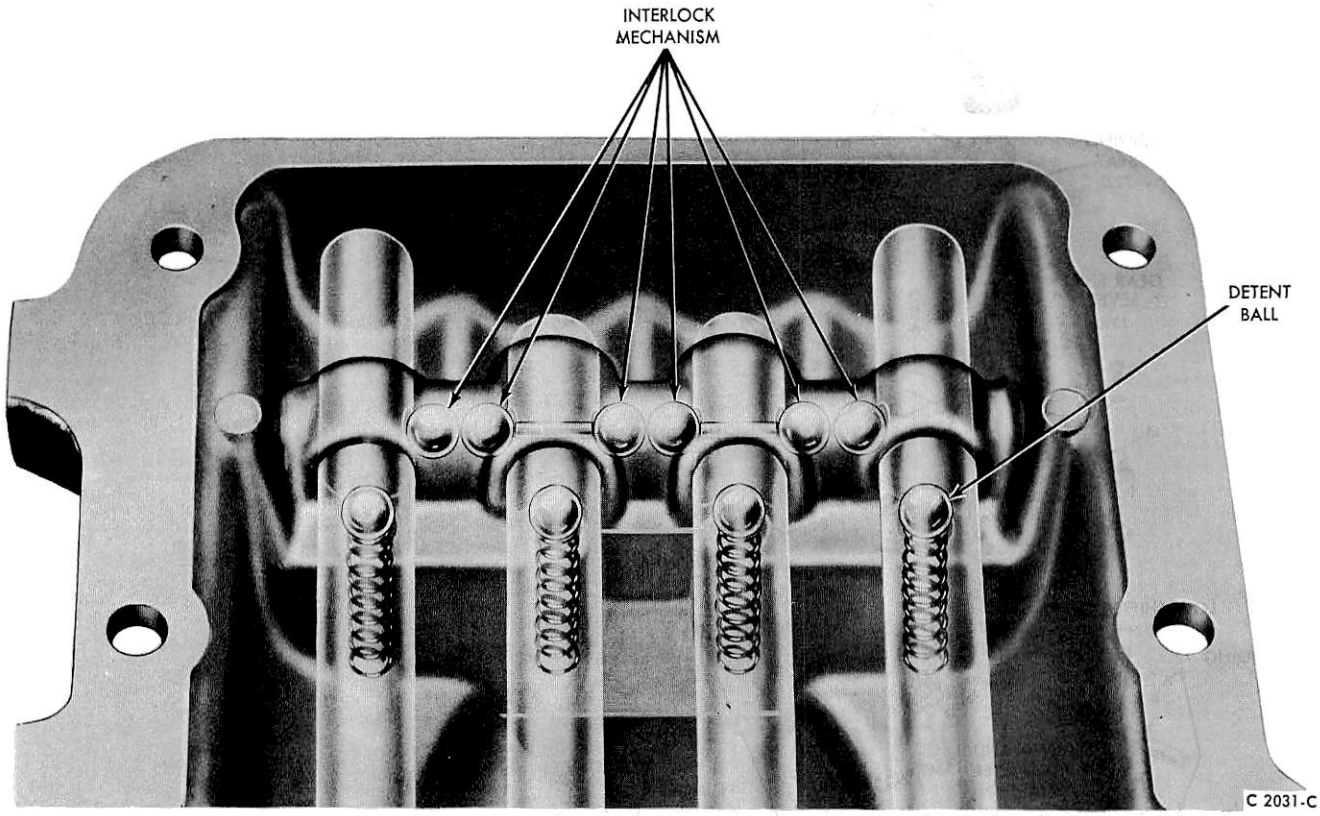

FIG. 9 Gear Shift Housing Interlock System

SPECIFICATIONS

APPROXIMATE LUBRICANT REFILL CAPACITY (PINTS)

Transmission	US	IMP
New Process 542 (SAE 50 Engine Oil) (ESE M2C39-A)	9	7.25

CC2232-B

GENERAL TORQUE GUIDE-(FOOT POUNDS)

Bolts	Torque Limits
Bearing Retainer to Transmission (Aux.)	5/8–18, 115-140
	1/2–13, 60-80
Bearing Retainer to Trans. (Main W/O Aux.)	1/2–13, 60-80
	5/8–11, 120-150
Bellcrank to Trans.	3/8–16, 25-32
Bellcrank Bracket to Transmission	3/8–16, 25-32
	9/16–12, 120-150
Clutch Housing to Engine Block	7/16–14, 33-45
Clutch Housing to Transmission Case	7/16–14, 40-50
	5/8–11, 120-150
	9/16–12, 90-115
	5/8–18C, 120-150
	9/16–18C, 90-115
Clamp Trunnion to Aux. Transmission	1/2–20, 50-55
	1/2–20, 60-70
Countershaft & Reverse Idler Shaft Retainer	1/2–13, 60-70
	5/16–18, 25-30
	3/8–16, 25-37
	3/8–16, 18-25
	7/16–14, 40-45
	1/2–13, 80-85
Gear Shift Lever Tower to Gearshift Housing	3/8–16, 20-25
	5/16–18, 11-16
	7/16–14, 30-45
Insulator Trans. to Frame Support	5/8–11, 96-120
Input Shaft Bearing Retainer to Trans. Case	5/16–18, 25-30
	3/8–16, 25-30
	7/16–14, 40-45
Output Shaft Bearing Retainer to Trans. Case	3/8–16, 20-25
	7/16–14, 30-38
	1/2–13, 50-62
	5/8–11, 96-120
Parking Brake to Trans. Bearing Retainer	1/2–20C, 45-55
	5/8–18, 180-220
	7/16–20, 50-70
Rear Cross Shaft Housing to Adapter or Trans. Assy.	7/16–14, 30-38
Remote Trans. Control Bracket to Frame	9/16–12, 110-130
Remote Trans. Control Bracket to Upper Shift Control	7/16–14, 26-32
Trans. Support Bracket to Transmission	3/8–16, 20-25
	5/8–11, 135-165

Bolts (Cont'd)	Torque Limits
Trans. Support Bracket to Transmission (Cont'd)	7/16–14, 53-65
Trans. Support Bracket and Bearing Retainer to Transmission	5/8–11, 96-120
	5/8–18, 115-140
Trans. Front Support Bracket and Trunnion to Transmission	5/8–11, 135-165
Trunnion Clamp to Bearing Retainer	1/2–20, 50-62
Nuts	**Torque Limits**
Adjusting Height Main Trans.	150-200
Bellcrank to Trans.	9/16–18, 70-90
	3/8–16C, 20-25
Bearing Retainer to Trans. (Main W/O Aux.)	1/2–20, 50-62
	5/8–18, 115-140
Drum Parking Brake to Companion Flange	3/8–24, 37-50
	7/16–20, 40-55
	1/2–20, 74-86
Handbrake Anchor Bar to Trans. Case (except 5-Speed Extra-Heavy Duty)	9/16–18, 100-110
Handbrake Drum to-U-Joint Flange (Engine End)	7/16–20, 45-50
	1/2–20, 75-80
	3/8–24, 30-35
Input Shaft Yoke to Aux. Trans.	1 1/4–18, 500-550
Insulators–Transmission Rear Support to Frame Brackets	3/4–16, 75-100
Insulator–Trans. Mounting Brackets to Trans. Support Bracket–Rear	3/4–16, 90-110
Insulator–Aux. Trans. to Frame Brackets	3/4–16, 195-235
	7/16–20, 40-55
	7/8–14, 150-200
Output Flange to Shaft (4-Speed Aux. Trans.)	500-550
Parking Brake Support and Transmission Support to Transmission	5/8–18, 115-140
Rear Support Plate to Trans. Aux. Case	5/8–18, 115-140
U-Joint Flange to Trans. Output Shaft	1.00–20, 250-300
	1 1/4–18, 500-550
	1 1/2–18, 550-600
Bolt and Nut	**Torque Limits**
Adjusting Height Auxiliary Trans.	150-200
Bellcrank Bracket to Crossmember	3/8–16, 20-25
	3/8–24, 24-30
Bellcrank to Mounting Bracket	9/16–18, 100-120
Brake Support Plate to Trans. Support Plate	1/2–20, 58-72
Insulator-Adjusting Studs to C/M	3/4–16, 195-235
Trans. Frame Brackets Mounting to Frame	1/2–20, 58-72
Trans. to Support Bracket–Rear	7/8–14, 150

CC 1040-C

PART 16-40 Clark 280 Five Speed Transmission

Applies To 500 Thru 800, 6000, 7000, 8000 Series Only

COMPONENT INDEX	Page	COMPONENT INDEX	Page
SPECIFICATIONS	40-06	Disassembly	40-05
SUB-ASSEMBLIES		Output Shaft	
Countershaft		Assembly	40-05
Assembly	40-05	Disassembly	40-04
Disassembly	40-05	TRANSMISSION ASSEMBLY	
Gearshift Housing		Assembly	40-04
Assembly	40-06	Description	40-01
Disassembly	40-05	Disassembly	40-04
Input Shaft		Installation	40-03
Assembly	40-05	Removal	40-03

DESCRIPTION

TRANSMISSION

The heavy-duty 5-speed Synchro-Silent Clark 280-V series transmission (Fig. 1) is available with either a direct drive ratio in fifth gear or an overdrive ratio in fifth gear. The overdrive ratio is reached through gearing in the transmission and not through a separate overdrive unit.

The overdrive and the direct drive type of transmission differ in gear ratios at all speeds and in the power flow path through the gears. However, the construction of these transmissions is basically the same.

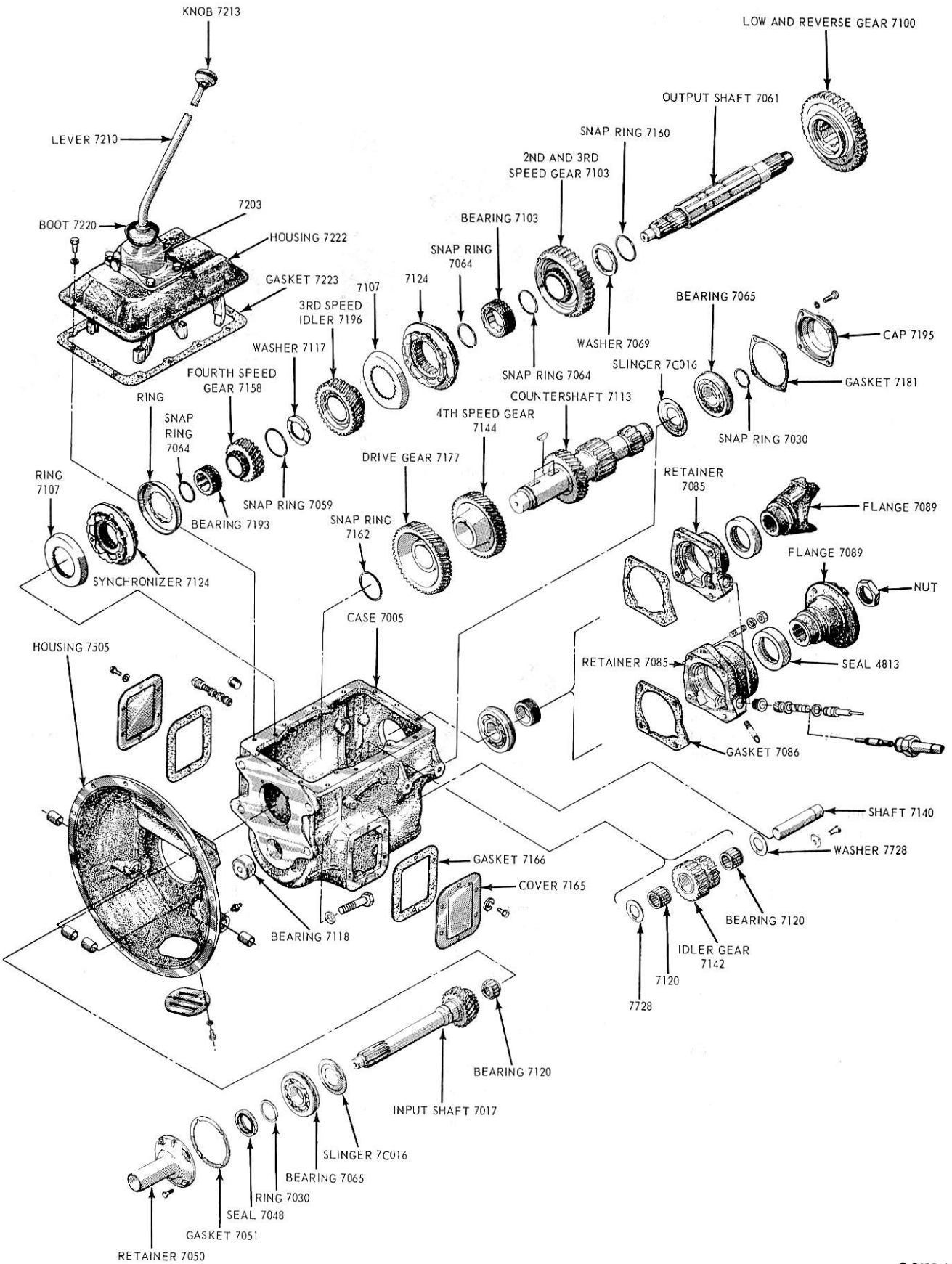

FIG. 1 Clark 280 Series Transmission—Disassembled

REMOVAL AND INSTALLATION

TRANSMISSION

Removal

1. Remove the floor mat and the floor plate.

Remove the gear shift lever housing and disconnect the parking brake lever. Cover the case opening.

2. On a C-Series model, shift the transmission into neutral, release the lock, and tilt the cab forward. Remove the rear cross-shaft housing bolts. Tie the housing so that it does not fall. If necessary to provide room for removal of the transmission, raise the rear of the truck and install safety stands.
3. Drain the transmission. Disconnect the drive shaft (or the coupling shaft) at the parking brake drum. If the truck is equipped with a coupling shaft support, disconnect the support bracket, and remove the coupling shaft.
4. Disconnect the parking brake adjusting rod, and disconnect the speedometer cable. Remove the driven gear and its bearing.
5. Remove the dust cover from the bottom of the clutch housing. Position a transmission jack under the transmission. Remove the top nuts, and the bottom bolts and lock washers that secure the transmission to the clutch housing.
6. Move the transmission to the rear until the input shaft splines clear the clutch housing. Be careful that the clutch release bearing and hub do not drop out of the release lever fork. Lower the transmission to the floor.

Installation

1. Place the transmission on a transmission jack, and raise the transmission until the input shaft splines are aligned with the clutch disc splines. The clutch release bearing and hub must be properly positioned in the release lever fork. Slide the transmission forward until it is in a position on the clutch housing.

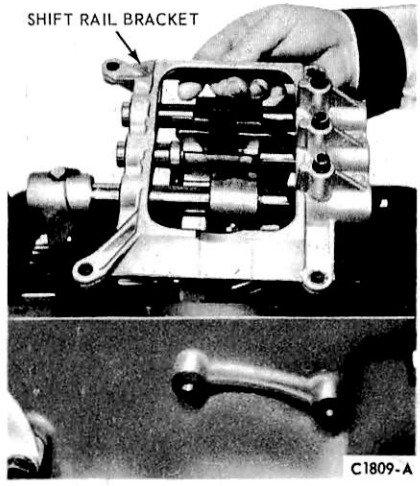

FIG. 2 Removing Shift Rod Support Assembly

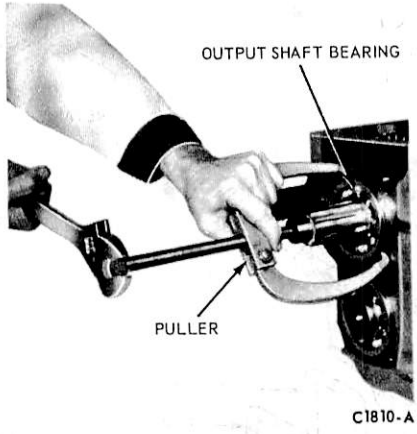

FIG. 3 Removing Output Shaft Rear Bearing

2. On a C-Series model, position the cross-shaft housing on the transmission case adapter, and install the mounting bolts. Torque the bolts to specification.
3. Install the lock washers, the top nuts, and the bottom bolts, and torque the bolts and nuts to specifications. Install the dust cover on the bottom of the clutch housing.



FIG. 4 Installing Countershaft Rear Bearing

Position the speedometer driven gear bearing and the gear, and connect the speedometer cable.

4. Connect the parking brake adjusting rod.
5. Install the coupling shaft in the support bracket, and connect the support bracket to the support plate. Connect the coupling shaft (or the drive shaft) at the transmission.
6. Install the shift lever housing. **When positioning the gear shift lever housing, always lower it straight down onto the gear shift housing.** Torque the gate plunger retainer to specification.
7. Lower the truck to the floor, and install the floor plate and the floor mat. Fill the transmission with the correct amount of proper lubricant. Adjust the remote control shift linkage.
8. Check the clutch pedal free travel, and adjust it if necessary.

DISASSEMBLY AND ASSEMBLY

TRANSMISSION

Disassembly

1. Remove the gear shift housing cover and remove the shift rods as an assembly (Fig. 2).
2. Remove the parking brake drum anchor clip screw. Remove the brake band jam nuts and locating screw.
3. Remove the brake band adjusting nut and bolt, then remove the two brake release springs and the cam lever shoe.
4. Slide the brake band off the drum and remove the anchor clip spring.
5. Lock the transmission in two gears and remove the brake drum retaining nut. Remove the brake drum from the output shaft.
6. Remove the output shaft rear bearing retainer and speedometer drive gear.
7. Remove the countershaft rear bearing retainer, then remove the bearing snap ring.
8. Remove the input shaft bearing retainer and pull the input shaft out of the case. **Be careful not to drop output shaft pilot bearing rollers into the transmission case.**
9. Force the output shaft rearward until the rear bearing is exposed. Using a bearing puller, remove the rear bearing from the bore (Fig. 3).
10. Lift the output shaft from the case.
11. Remove the reverse idler shaft using Tool T50T-100-A. Lift the reverse idler gear, bearing and thrust washers from the case.
12. Force the countershaft rearward until the rear bearing is exposed. Remove the bearing and oil slinger with a suitable puller.
13. Lift the countershaft from the case.

Assembly

1. Coat the front countershaft needle bearings with grease and install them in the front countershaft bore.
2. Tip the rear of the countershaft down and lower it into the case. Push the countershaft forward and insert the shaft into the front bearing.
3. Position the countershaft rear bearing oil slinger and bearing on the shaft. Drive the bearing into the bore (Fig. 4). The countershaft drive gear should be supported while driving the shaft to prevent damage to the front bearing.
4. Coat the reverse idler thrust washers with grease and position them in the case.
5. Insert the two roller bearings in the reverse idler gear bore. Place the gear assembly in position in the transmission case, with the small gear toward the rear of the case.
6. Insert the reverse idler shaft through the hole in the case, through the reverse idler gear and into the forward support boss. Drive the reverse idler shaft into the case until the slot in the shaft is lined up with the lock bolt hole. Install the retainer in the slot and secure the retainer with the lock bolt. Torque the bolt to specifications.
7. Tilt the rear of the output shaft assembly downward and insert the end of the shaft through the output shaft bore in the case. Lower the front end of the output shaft until it is in line with the pilot bearing opening. Move the assembly forward into position.
8. Insert the pilot bearing in the input shaft bore.
9. Position the input shaft and bearing assembly in the forward end of the transmission case. Tap the front end of the shaft with a soft hammer until the snap ring is seated against the case. Be sure the clutching teeth of the input shaft gear mesh with the fifth-speed synchronizer without bind.
10. Position a new gasket on the input shaft bearing retainer. **Be sure that the oil return holes in the retainer and gasket are aligned with the return hole in the case.**
11. Install the lock washers and bolts on the input shaft bearing retainer and torque the bolts to specification.
12. Position the output shaft rear bearing on the shaft and drive the bearing into its bore until the snap ring is seated against the case.
13. Position the countershaft rear bearing cap and gasket on the case and install the lock washers and bolts. Torque the bolts to specification.
14. After installing the speedometer drive gear on the output shaft, position a new oil seal in the output shaft bearing retainer. Be sure the seal is correctly installed. Position a new gasket and the bearing retainer on the case and install the lock washers and bolts. Torque the bolts to specification.
15. Install the parking brake drum assembly and companion flange assembly.
16. Shift all rods to the neutral position and install the gear shift housing assembly in the transmission case. Be sure the shift forks engage the slots on the gears. Install the shift rod support assembly bolts and torque the bolts to specification. Install the three locking bolts and springs in the support housing (Fig. 5).
17. Install a new transmission cover gasket on the case and position the top cover. Install the cover retaining bolts and torque them to specification.

SUB-ASSEMBLIES

OUTPUT SHAFT

Disassembly

1. Remove the first and reverse gear from the output shaft.
2. Clamp the output shaft, front end facing upward, in a soft-jawed vise. Remove the fourth and fifth-speed synchronizer assembly from the shaft. Remove the snap ring retaining the fourth-speed gear and remove the shift hub sleeve and fourth-speed gear.
3. Remove the third-speed gear snap ring and lift off the locating washer and gear.
4. Lift off the second and third-speed synchronizer assembly.

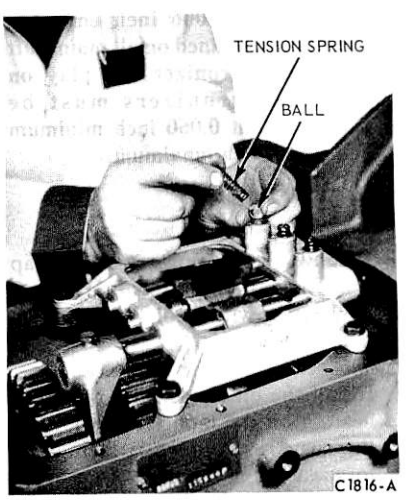

FIG. 5 Installing Shift Rod Locking Springs and Balls

5. Remove the snap ring retaining the second and third-speed gear shift hub sleeve and lift the sleeve off the shaft.
6. Remove the second-speed gear snap ring and remove the locating washer and gear.

Assembly

1. Install the output shaft, forward end up, in a soft-jawed vise.
2. Install the second-speed gear lower snap ring and locating washer on the output shaft. Install the second-speed gear on the shaft with the clutching teeth facing upward. Install the upper snap ring. **While pressing downward on the second speed gear to compress lower helical snap ring, check the gap between the second gear and the upper snap ring. This gap must be a minimum of 0.006 inch.**
3. Install the second and third-speed shift hub and snap ring.
4. Install the second and third-speed synchronizer assembly on the shaft.
5. Install the third-speed gear on the shaft with the clutching teeth facing downward. Install the third-speed gear locating washer and snap ring.
6. Install the fourth-speed gear with the clutching teeth up.
7. Install the bottom cone of the fourth and fifth-speed synchronizer over the cluthcing teeth of the fourth-speed gear.
8. Install the fourth and fifth-speed shift sleeve hub. **Be sure the chamfered side is facing down. Install the snap ring.**
9. Install the fourth and fifth-speed synchronizer on the shift hub sleeve (Fig. 6).
10. Reverse the output shaft and install the first and reverse gear with the shift fork groove facing down. **A minimum of 0.006 inch end play must be maintained on all mainshaft gears. Synchronizer end play on both synchronizers must be maintained at 0.060 inch minimum and 0.160 inch maximum.**

INPUT SHAFT

Disassembly

1. Remove the bearing retaining snap ring from the input shaft. Remove the bearing with Tool T53T-7065-A (Fig. 7).

Assembly

1. Install the oil slinger and press the bearing on the input shaft. Be sure the snap ring groove is facing the forward end of the shaft. **To prevent damage to the bearing, apply pressure on the inner race of the bearing only.**
2. Install the bearing snap ring.

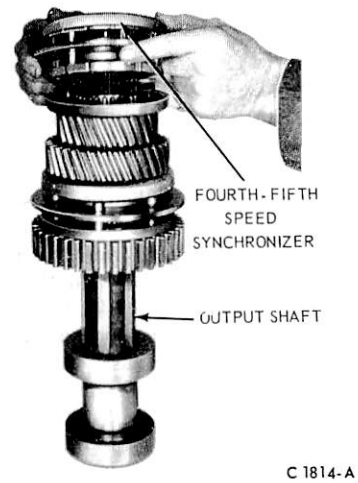

FIG. 6 Installing Fourth-Fifth Speed Synchronizer

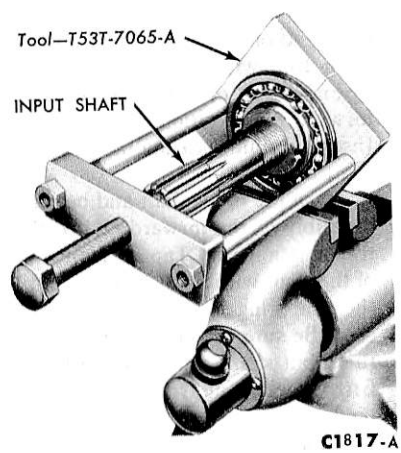

FIG. 7 Removing Input Shaft Bearing

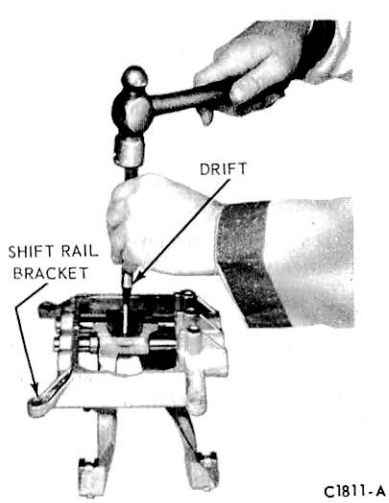

FIG. 8 Removing shift Fork Roll Pin

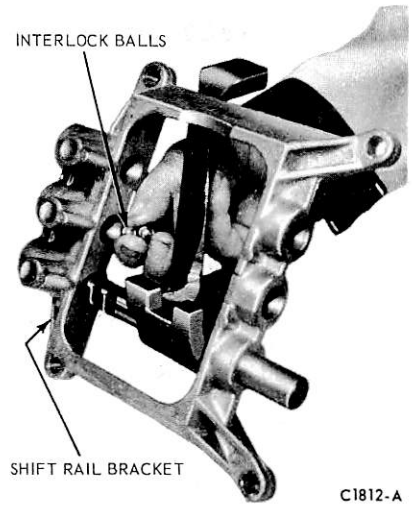

FIG. 9 Installing Shift Rod Interlock Balls

COUNTERSHAFT

Disassembly

1. Remove the snap ring at the forward end of the countershaft (Fig. 1).
2. Place the countershaft assembly in a hydraulic press, and press the drive gear off the shaft.
3. Remove the key from the shaft and press the fourth-speed gear off the shaft. Remove the remaining key.

Assembly

1. Install the fourth-speed gear Woodruff key in the slot on the shaft. Position the fourth speed gear on the shaft with the long hub facing toward the front.
2. Install the countershaft main drive gear key in the keyway in the shaft. Install the countershaft drive gear on the shaft with the long hub facing toward the rear. Install the snap ring on the countershaft.

GEAR SHIFT HOUSING

Disassembly

It is not necessary to disassemble the gear shift housing assembly (Fig. 10) to determine if parts are worn. Note the condition of the shifter fork shafts and forks by a visual inspection. If the forks are excessively worn, or if they bind when shifted into the various positions, disassemble the gear shift housing assembly to make repairs. Check the interlocking system.

1. Remove the first and reverse shift lug lock screw and slide the shift fork, rod and lug from the shift rod support.
2. Using a small drift remove the second and third-shift fork roll pin and slide the shift rod out of the support assembly (Fig. 8). **Do not lose the interlock pin or spacer.**
3. Remove the fourth and fifth-shift

fork roll pin with a small drift. Remove the shift rod and fork from the support assembly.

Assembly

1. Slide the fourth and fifth-shift shaft through the shift support and into the fourth and fifth-shift fork. Install the roll pin and move the rod to the neutral position.
2. Install two interlock balls between the shift shaft bores (Fig. 9).
3. Slide the second and third-shift rod through the shift support. Install the spacer and interlock pin in the shift rod.
4. Install the second and third-shift fork roll pin and move the rod to the neutral position.
5. Install two interlock balls between the second and third and first and reverse shift rod bores.
6. Install the first and reverse rod in the support and in the shift lug.
7. Install the first and reverse lug lock screw and lock wire.

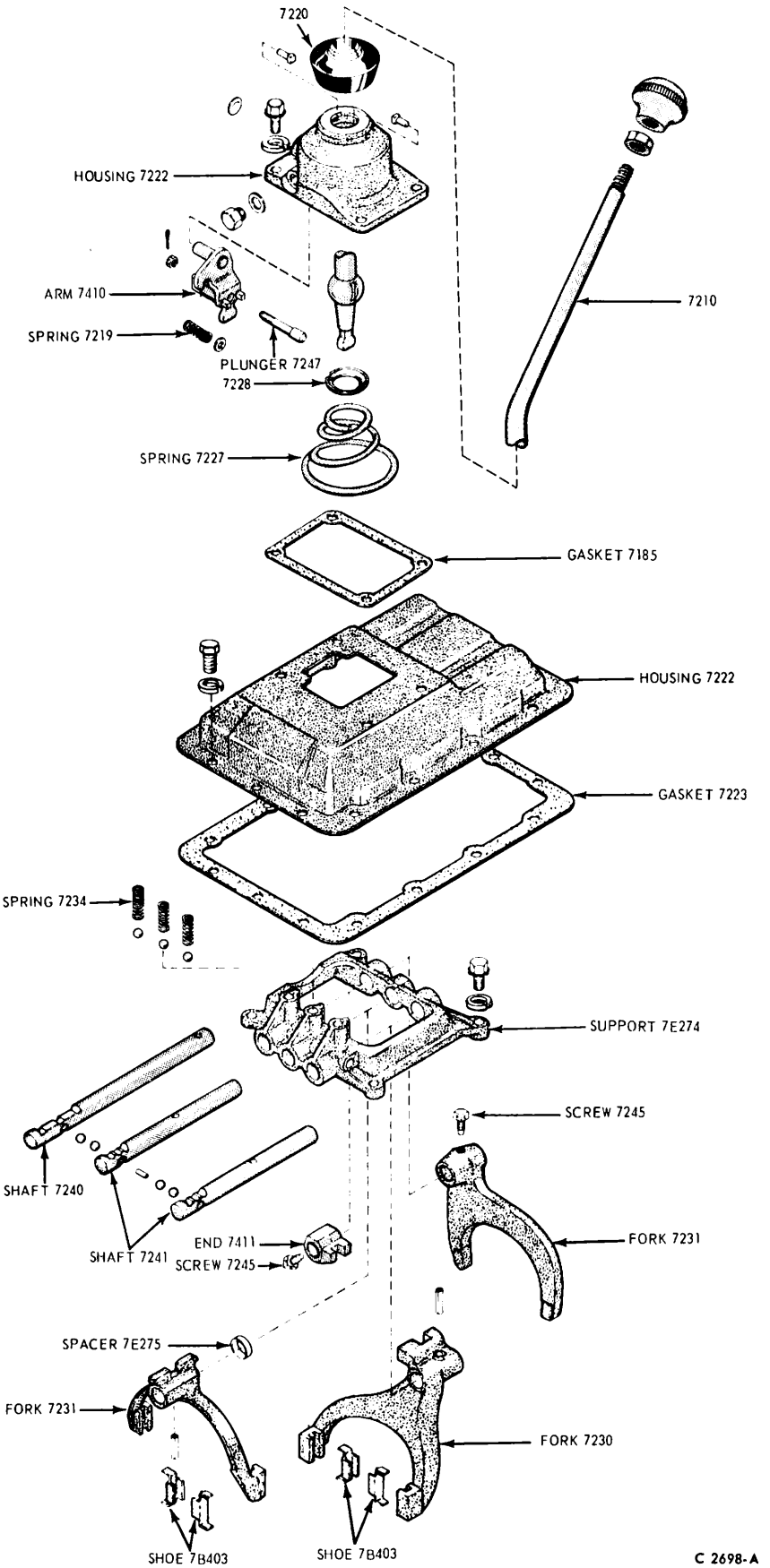

FIG. 10 Gear Shift Housing—Disassembled

SPECIFICATIONS

APPROXIMATE LUBRICANT REFILL CAPACITY (PINTS)

Transmission	US	IMP
Clark 280 (SAE 50 Motor Oil) (ESE-M2C39-A)	8	6.6

CC1104-A

TORQUE LIMITS

Transmission	Ft-Lbs
Companion Flange Nut	400-450
Countershaft Rear Bearing Cap	20-25
Input Shaft Bearing Retainer	20-25
Output Shaft Rear Bearing Retainer	20-25
Reverse Idler Shaft Lock Bolt	20-25
Shift Control to Case	20-25
Shift Cover to Case	20-25
Shift Tower to Shift Cover	20-25
Transmission to Clutch Housing	60-80

CC1157-A

PART 16-41 Clark 380 Five-Speed Transmission

This Information Applies To: N-7000; C, L, LN, LNT, LT, LTS-8000 and L, LN, LNT, LT, LTS-900

COMPONENT INDEX	Page	COMPONENT INDEX	Page
SPECIFICATIONS	41-07	Output Shaft	
		Assembly	41-05
SUB-ASSEMBLIES		Disassembly	41-04
Countershaft		Output Shaft Rear Bearing Cap	
Assembly	41-05	Assembly	41-05
Disassembly	41-05	Disassembly	41-05
Gear Shift Housing		Reverse Lug Assembly	
Assembly	41-05	Assembly	41-07
Disassembly	41-05	Disassembly	41-07
Gear Shift Lever and Tower			
Assembly	41-06	TRANSMISSION ASSEMBLY	
Disassembly	41-05	Assembly	41-03
Input Shaft and Bearing		Description	41-01
Assembly	41-05	Disassembly	41-03
Disassembly	41-05	Installation	41-03
		Removal	41-01

DESCRIPTION

TRANSMISSION

The Clark 380 Series transmissions are of the synchromesh type, with synchronized shifting in all speeds except low and reverse. Second, third, fourth and fifth-speed gears are helical cut and in constant mesh with the countershaft. Two synchronizer assemblies connect these gears to the output shaft. The low and reverse-speed gear is a spur cut gear, splined to the output shaft. Two power take-off openings are provided in the sides of the transmission case.

REMOVAL AND INSTALLATION

TRANSMISSION

Removal

1. Remove the floor mat and the floor plate. Remove the gear shift lever housing and disconnect the parking brake lever. Cover the case opening.
2. On C-Series units, shift the transmission into neutral, release the lock and tilt the cab forward. Remove the rear cross-shaft housing bolts. Tie the housing so that it does not fall. If necessary to provide room for removal of the transmission, raise the rear of the truck and install safety stands.
3. Drain the transmission. Disconnect the drive shaft (or the coupling shaft) at the parking brake drum. If the truck is equipped with a coupling shaft support, disconnect the support bracket and remove the coupling shaft.
4. Disconnect the parking brake adjusting rod and the speedometer cable. Remove the driven gear and its bearing (Fig. 1).
5. Remove the dust cover from the bottom of the clutch housing. Position a transmission jack under the transmission. Remove the top nuts, the bottom bolts and lock washers that secure the transmission to the clutch housing.
6. Move the transmission to the rear until the input shaft splines clear the clutch housing. Be careful that the clutch release bearing and hub do not drop out of the release lever fork. Lower the transmission to the floor.

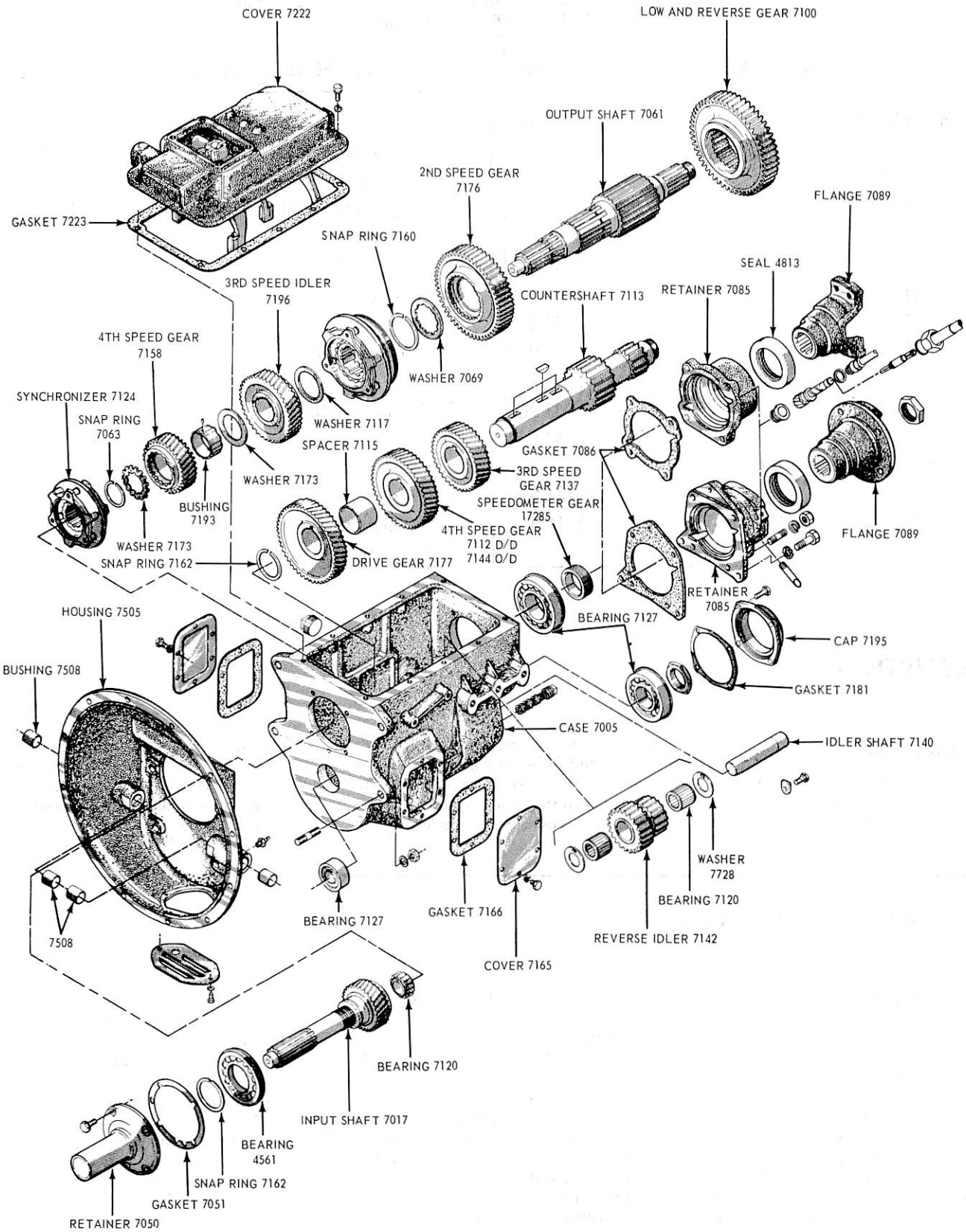

C 2697-A

FIG. 1 Disassembled View Clark 380 Series Transmission

Installation

1. Place the transmission on a transmission jack. Raise the transmission until the input shaft splines are aligned with the clutch disc splines. The clutch release bearing and hub must be properly positioned in the release lever fork. Slide the transmission forward until it is in position on the clutch housing.
2. On C-Series units, position the cross-shaft housing on the transmission case adapter and install the mounting bolts. Torque the bolts to specification.
3. Install the lock washers, the top nuts and the bottom bolts. Torque to specifications. Install the dust cover on the bottom of the clutch housing. Position the speedometer driven gear bearing and the gear. Connect the speedometer cable.
4. Connect the parking brake adjusting rod.
5. Install the coupling shaft in the support bracket and connect the support bracket to the support plate. Connect the coupling shaft (or the drive shaft) at the transmission.
6. Install the shift lever housing. When positioning the gear shift lever housing, always lower it down onto the gear shift housing. Torque the gate plunger retainer to specification.
7. Lower the truck to the floor. Install the floor plate and the floor mat. Fill the transmission with the correct amount of the specified lubricant. Adjust the remote control shift linkage.
8. Check the clutch pedal free travel and adjust it if necessary.

DISASSEMBLY AND ASSEMBLY

TRANSMISSION

Disassembly

1. Remove the gear shift housing assembly.
2. Shifting by hand, engage the transmission into two speeds at the same time.
3. Remove the output flange nut cotter pin.
4. Remove the nut.
5. Remove the parking brake band assembly.
6. Remove the brake drum and flange assembly.
7. Remove the output shaft and countershaft rear bearing caps and gaskets.
8. While the transmission is still locked in two speeds, remove the countershaft rear bearing attaching nut.
9. Remove the input shaft bearing cap and gasket.
10. Remove the input shaft and bearing assembly from the front of the case. **Proceed with caution to avoid dropping the pilot bearing from the pocket of the drive gear if it remains with the gear. If not in the pocket of the gear, remove it from the end of the output shaft pilot.**
11. Remove the speedometer drive gear and the speedometer drive gear spacer from the output shaft. Move the output shaft assembly toward the rear of the case far enough that the rear bearing clears the case. Using a suitable puller, remove the bearing from the end of the shaft.
12. The forward end of the output shaft can now be tilted upward to clear the front of the case and the entire assembly removed.
13. Remove the screw and lock washer holding the reverse idler shaft lock plate at the rear of the case and remove the lock.
14. Using a suitable puller in the slot in the end of the reverse idler shaft, pull the shaft from the case.
15. Lift the reverse idler gear from the case.
16. Remove the two reverse idler bearings and bearing spacer from the hub of the reverse idler gear.
17. Push the countershaft toward the rear of the transmission case far enough that the rear countershaft bearing can be removed from the countershaft.
18. The countershaft assembly can now be removed by tilting the forward end upward in a manner similar to that used in removing the main shaft.
19. If countershaft front or pilot bearing is to be replaced, remove clutch housing from transmission.
20. Press pilot bearing from transmission case. **Do not hammer or drive out bearing as damage or distortion to the bore in case will result.**

Assembly

1. If countershaft front bearing is to be replaced, coat outer diameter of pilot bearing with a suitable sealer.
2. From clutch housing end of case with open end of bearing toward rear of transmission, press the bearing 0.007 inch below front face of case.
3. Tip the rear end of the countershaft down and lower it into the case, running the rear of the countershaft through the countershaft bearing opening in the rear of the case far enough that the front of the countershaft may be lowered into position. Push the countershaft forward into position.
4. Install the countershaft rear bearing. Be sure that the snap ring is in position in the groove of the outer race of the countershaft rear bearing and press the bearing into position on the shaft with the snap ring toward the rear.
5. Insert the two roller bearings and the spacer into the hub of the reverse idler gear and position it in the case. The gear with the chamfered teeth should be toward the rear of the case.
6. Insert the reverse idler shaft through the hole in the rear of the case, through the reverse gear and into the forward support boss. Shaft should be driven inward until the forward face of the slot in the shaft is flush with the rear face of the case and slot lined up to permit installation of a locking plate.
7. Install the locking plate in position in the slot in the end of the shaft and secure with capscrew and lock washer.
8. Position the output shaft assembly in the transmission case by tilting the rear end of the assembly down and lowering it into and through the opening in the rear of the case. Lower the front end in line with the pilot bearing opening and move the output shaft assembly forward into position. Let the shaft rest in this position until assembly is completed.
9. Assemble the output shaft rear bearing over the end of the output shaft with snap ring in outer race facing toward the rear.

10. Install pilot bearing on the output shaft.
11. Install the input shaft and bearing assembly in the case so that the input shaft gear engages and meshes with the countershaft gear and the output shaft and pilot bearing are seated in the input shaft bore. If a new pilot bearing is used, it will be in a plastic sleeve. Stand the drive gear on end. Set the bearing and sleeve over the bearing pocket in the drive gear. Slide the bearing rollers and cage from the plastic sleeve into the bearing pocket. **Important—When a new bearing is used, always install a new bearing race on the mainshaft. If the old pilot bearing is used, set the rollers in the bearing cage and hold them in place with a rubber band. Slide the bearing rollers and the cage from the rubber band into the bearing pocket.**
12. Install the input shaft bearing cap and gasket. Be sure the oil return hole in the cap is lined up with the oil return hole in the case. This passage must be open and clear.
13. Lock gears into two speeds at one time and install the countershaft rear bearing attaching nut. Torque the nut to specification and stake in position with a punch.
14. Install the countershaft rear bearing cap and gasket.
15. Install the speedometer drive gear spacer and speedometer drive gear on the output shaft.
16. Install the output shaft rear bearing cap assembly and gasket.
17. Install the parking brake drum and companion flange assembly.
18. Install the companion flange nut. Tighten the nut to specification. Install a new cotter pin to lock this nut into position.
19. Move all gears to neutral and assemble the gear shift housing and gasket to the transmission case, making sure the shift forks engage slots of the gears.
20. Assemble the gasket, gear shift lever and tower assembly to shift bar housing.

SUB-ASSEMBLIES

OUTPUT SHAFT

Disassembly

1. Remove the first and reverse sliding gear and the fourth and fifth synchronizer assembly from the output shaft.
2. Place the balance of the assembly in a vise using copper or lead jaws so as not to damage splines. This assembly should be positioned with the front end upwards.
3. Spread the snap ring holding the fourth-speed gear and remove it from the shaft.
4. Remove the fourth-speed gear and washer from the shaft.
5. Remove the assembly from the vise and with the front end pointed downward, tap it lightly on a block of wood, allowing the weight of the third-speed gear to force the fourth-speed gear bushing off of the output shaft. After this sleeve has loosened, remove it from shaft along with the fourth-speed gear locating washer. When the sleeve is removed, the locating pin will come off with it. Care should be exercised not to lose this pin.
6. The third-speed loose gear may now be removed from the front end of the shaft.
7. Remove second and third-speed synchronizer assembly.
8. Remove second gear retaining ring and washer.
9. Remove second-speed constant mesh gear.
10. Remove second gear bushing sleeve and locating washer from shaft.

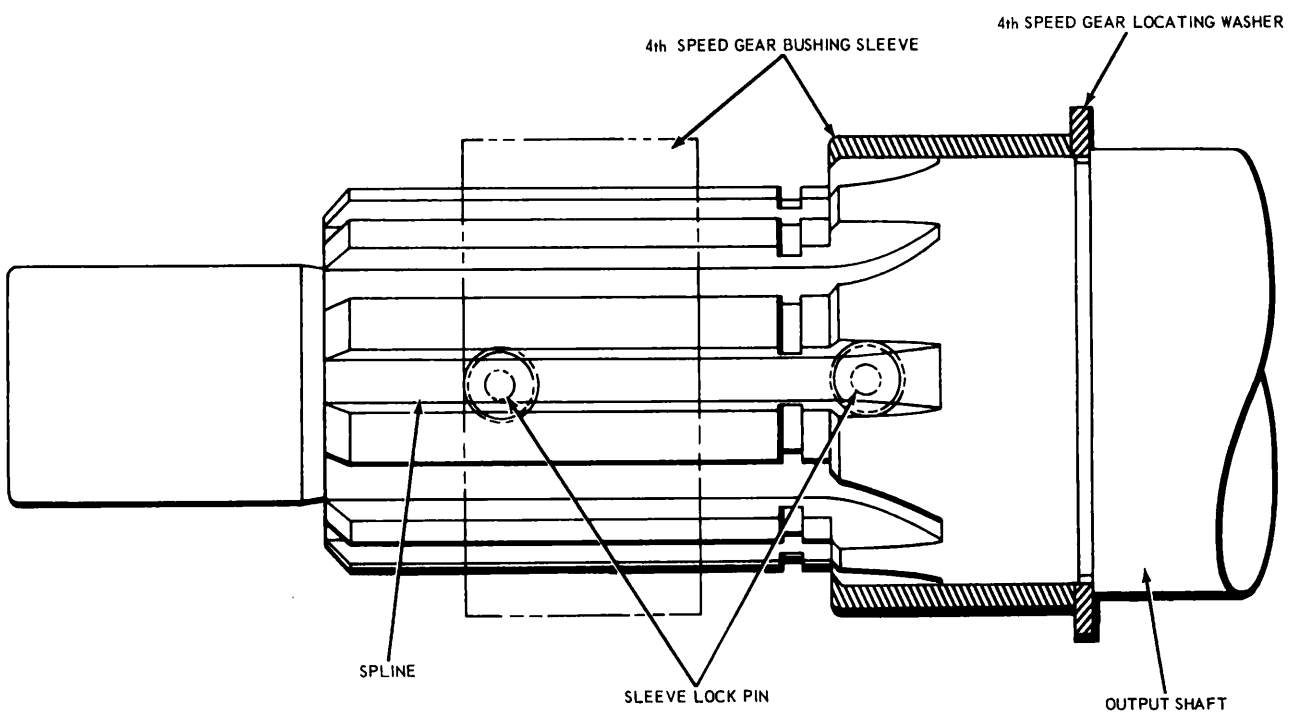

FIG. 2 Installing Bushing Sleeve

Assembly

1. Clamp the output shaft in a soft-jawed vise with the front end up.
2. Drop the second gear locating washer into position over the shaft.
3. With lockpin in place in the bushing sleeve, install the bushing sleeve on the shaft with the lockpin toward the upper end (Fig. 2).
4. To be sure of a properly tight stack-up between the second-speed locating washer, second-speed bushing sleeve, second-speed retaining washer and snap ring, the following procedure should be used. Before the second-speed gear is installed on the bushing sleeve, place a retaining washer on the shaft and hold it down tight against the bushing sleeve. Holding the snap ring parallel to the retaining washer, slip the snap ring into the snap ring groove in the mainshaft (Fig. 3). Select variable thickness washers until a washer is selected that will give 0.004 inch maximum snap ring looseness. Remove the selected washer and install the gear over the bushing sleeve. Place the selected washer in position and install snap ring on shaft so that it is locked securely in the groove. End play on second gear must be a minimum of 0.006 inch.
5. Place the second and third-speed synchronizer on the splines of the shaft and drop it into position.
6. Drop the third gear thrust washer into position over shaft.
7. Place the third-speed gear on the shaft with toothed hub downward.
8. Drop the fourth-speed gear locating washer into position over the shaft.
9. With the lockpin in place in the bushing sleeve, install the bushing sleeve on the shaft with the lockpin toward the upper end (Fig. 2).
10. To be sure of a tight stack-up between the fourth-speed locating washer, fourth-speed bushing sleeve, fourth-speed retaining washer and snap ring, follow the procedure given in step 4 above, selecting a retaining washer that will give 0.004 inch maximum snap ring looseness (Fig. 3). Mainshaft gears must maintain minimum gear end play as follows:
    2nd—0.006 inch
    3rd—0.009 inch
    4th—0.006 inch
11. Remove the assembly from the vise and install the sliding gears on the shaft as follows: Fourth and fifth-speed synchronizer hub with the large end toward the rear. First and reverse gear with the fork slot toward the front.

COUNTERSHAFT

Disassembly

1. Remove the snap ring from the front end of the countershaft.
2. Using an arbor press or suitable gear puller, remove the countershaft drive gear spacer, fourth-speed gear and third-speed gear.
3. Remove the gear keys from the shaft.

Assembly

1. Install a Woodruff key in each key slot on the countershaft except the drive gear.
2. Press the third-speed gear onto the shaft with the long hub toward the rear.
3. Press the fourth-speed gear onto the shaft with the long hub toward the rear.
4. Install drive gear spacer and drive gear key.
5. Press the countershaft drive gear onto the shaft with the long hub toward the rear.
6. Install the retaining ring.

INPUT SHAFT AND BEARING

Disassembly

1. Place input shaft gear in vise using copper or lead jaws so as not to damage teeth.
2. Remove the jam nut holding the bearing on the input shaft.
3. Using a suitable puller or an arbor press, remove the bearing from the input shaft.

Assembly

1. Assemble the bearing on the output shaft with the snap ring toward the pilot end of the gear.
2. Install the bearing attaching nut and torque it to specifications.
3. Stake the nut in position.

OUTPUT SHAFT REAR BEARING CAP

Disassembly

1. Press or drive out the oil seal. This should be done only if the oil seal needs replacement.

Assembly

1. Press new oil seal in bearing cap (lip of seal down toward transmission).

GEAR SHIFT HOUSING

Disassembly

1. Place the cover on a bench in an inverted position (Fig. 4) with the expansion plug opening facing upward.
2. Remove the expansion plugs from the forward openings in the cover.
3. Remove the lock wires from the shifter lugs and forks.
4. Shift all rails into neutral position.
5. Remove the lock screw from second and third shift fork and move the rail toward the rear of the cover so

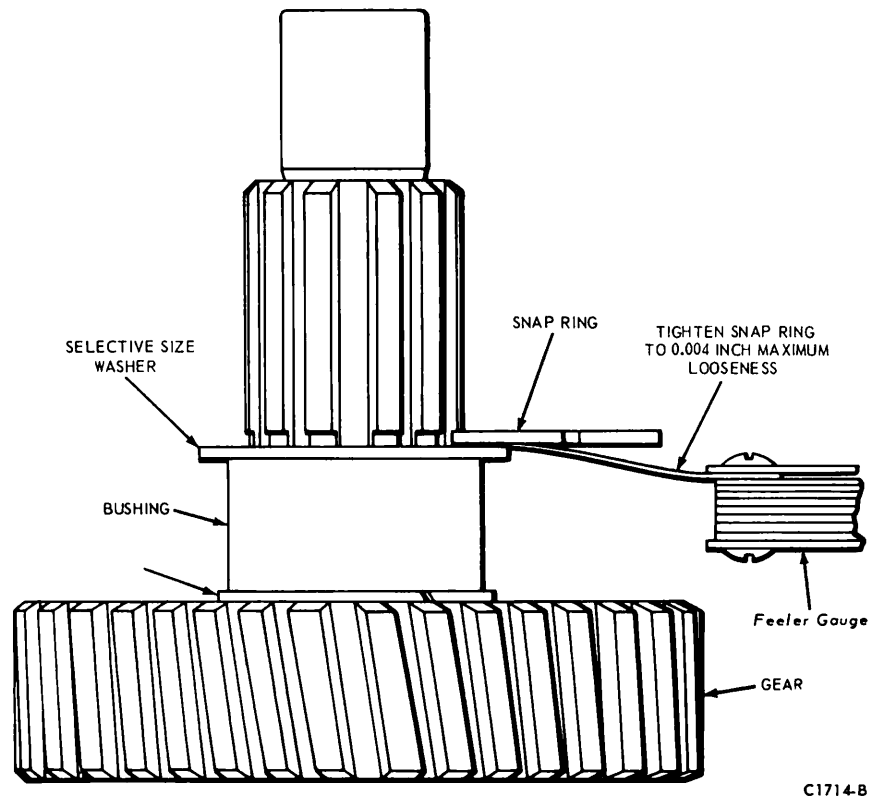

FIG. 3 Setting Second or Fourth-Speed Gear End Play

the lock screw can be removed from the lug.
6. Holding a thumb over the detent ball hole in the center rail support to prevent losing the ball, remove the rail, lug and fork from the cover.
7. Remove the lock screw from the fourth and fifth shift fork and move the rail toward rear of cover so the lock screw can be removed from the lug.
8. Holding a thumb over the detent ball hole to prevent loss of the ball, remove the fourth and fifth shift rail, fork and lug from the cover.
9. Remove the lock screw from the first and reverse shift fork.
10. Holding a thumb over the detent ball hole in center rail support, remove the shift fork and rail from the cover.
11. Remove mesh lock springs and the four (4) interlock balls located in cross bore holes between first and reverse, fourth and fifth and second and third detent ball holes of center rail support.
12. Remove lock screw from first and reverse rocker lug, then move the rail toward the rear of the cover so that the lock screw can be removed from the first and reverse lug.
13. The rocker arm may be lifted from the pivot pin.

Assembly

Install fourth and fifth shift rail and fork in following manner:
1. Push rail through forward opening of cover.
2. Install two (2) interlock balls between first and reverse and fourth and fifth rails.
3. Place detent ball spring in position in well of forward rail support.
4. Place detent ball in position on spring.
5. Using suitable tool, compress spring and ball in such a manner as to pass between guide fingers of first and reverse rocker lug if fingers are aligned.
6. Slide fourth and fifth shift fork on rail with offset for lock screw toward rear of cover.
7. Install lock screw in fork and wire securely.
8. Shift into neutral position.

Install second and third shift rail and fork in the following manner:
1. Push rail through forward opening in cover.
2. Install two (2) interlock balls between second and third and fourth and fifth detent ball holes of forward rail support.
3. Place the detent ball spring in position in the well of the rail support.
4. Place the detent ball in position on the spring.
5. Using suitable tool, compress spring and ball in such a manner as to allow rail to pass through support.
6. Slide second and third shift fork onto rail with offset for lock screw toward repairman.
7. Install lock screw in fork and wire securely.
8. Shift into neutral position.
9. Install the expansion plugs in the forward openings.

Assemble first and reverse shift fork and rail in the following manner:
1. Install detent ball lock spring and ball in well of first and reverse shift fork (Fig. 4).
2. Using a suitable tool, compress the ball and spring so that rail may pass through fork.
3. Push rail through rear opening of cover.
4. Holding fork in position on rocker arm and with offset to the rear of the cover, push rail through fork and into rail support.
5. Install the lock screw in the rail support and rail, then wire securely. Check assembly of cover by shifting in and out of speeds. Then shift into fifth-speed and attempt to shift into first, reverse, second or third at the same time. This provides a check on the proper assembly of interlock balls and pin. Shift lever should not shift into more than one speed at a time.
6. Return the rail to neutral position.

GEAR SHIFT LEVER AND TOWER

Disassembly
1. Remove the gear shift knob and dust cover.
2. Remove the shift lever, support spring and washer.
3. The shift lever may now be removed from the shift tower.

Assembly
1. Place shift lever in shift tower.
2. Position shift lever to transmission case. Replace washer and support spring.
3. Replace dust cover and gear shift knob.

REVERSE LUG ASSEMBLY

Disassembly
1. Remove the cotter key from the end of the plunger.
2. Remove the nut from the end of the plunger.
3. Spring and plunger may not be removed from well in lug.

Assembly
1. Replace plunger and spring in well in lug.
2. Replace nut on end of plunger.
3. Install cotter key.

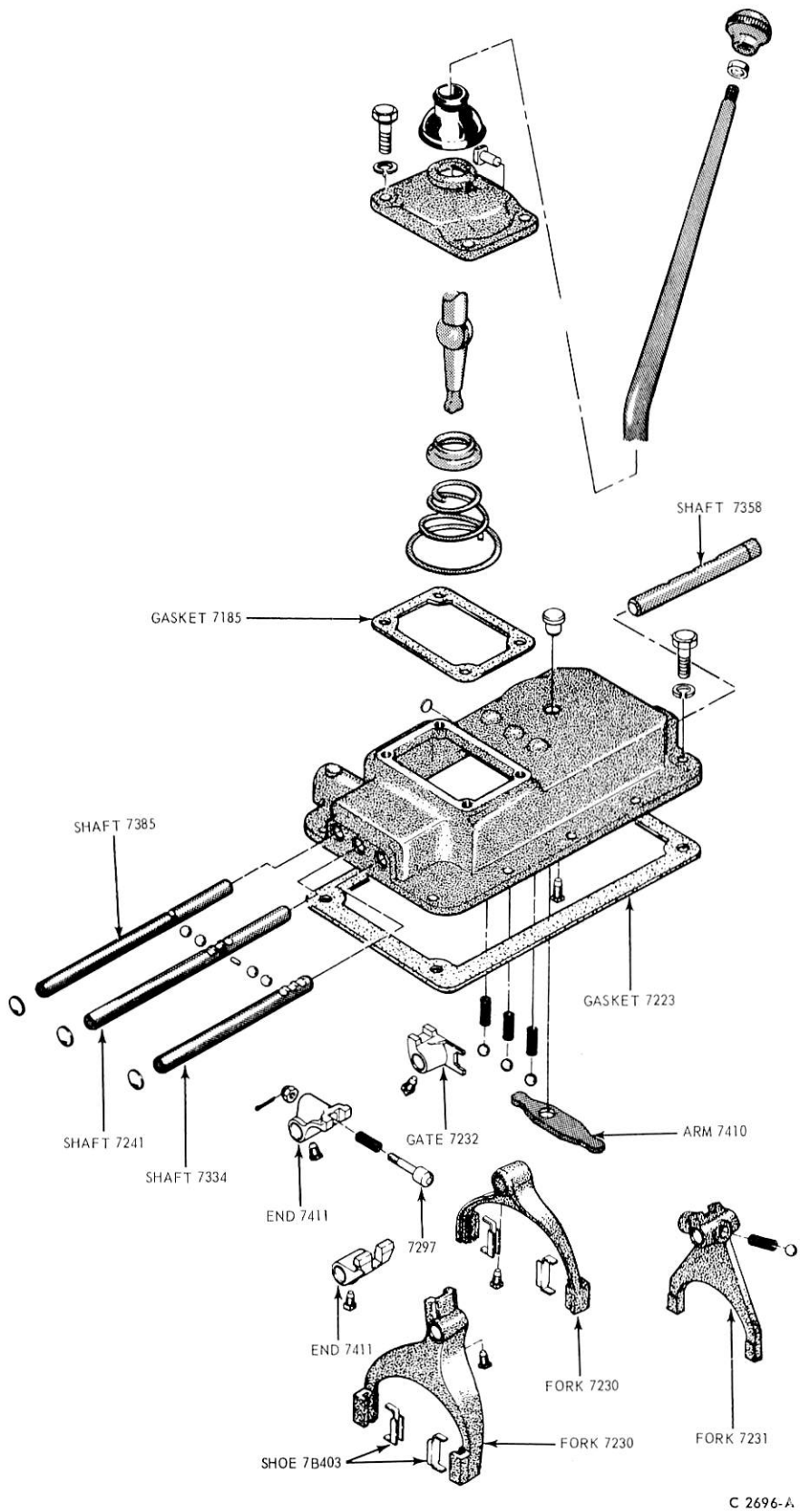

FIG. 4 Gear Shift Housing

SPECIFICATIONS

APPROXIMATE LUBRICANT REFILL CAPACITY (PINTS)

Transmission	US	IMP
Clark 380 (SAE 50 Engine Oil) (ESE M2C39-A)	13	10.75

CC1106-A

GENERAL TORQUE GUIDE-(FOOT POUNDS)

Bolts	Torque Limits
Bearing Retainer to Transmission (Aux.)	5/8–18, 115-140
	1/2–13, 60-80
Bearing Retainer to Trans. (Main W/O Aux.)	1/2–13, 60-80
	5/8–11, 120-150
Bellcrank to Trans.	3/8–16, 25-32
Bellcrank Bracket to Transmission	3/8–16, 25-32
	9/16–12, 120-150
Clutch Housing to Engine Block	7/16–14, 33-45
Clutch Housing to Transmission Case	7/16–14, 40-50
	5/8–11, 120-150
	9/16–12, 90-115
	5/8–18C, 120-150
	9/16–18C, 90-115
Clamp Trunnion to Aux. Transmission	1/2–20, 50-55
	1/2–20, 60-70
Countershaft & Reverse Idler Shaft Retainer	1/2–13, 60-70
	5/16–18, 25-30
	3/8–16, 25-37
	3/8–16, 18-25
	7/16–14, 40-45
	1/2–13, 80-85
Gear Shift Lever Tower to Gearshift Housing	3/8–16, 20-25
	5/16–18, 11-16
	7/16–14, 30-45
Insulator Trans. to Frame Support	5/8–11, 96-120
Input Shaft Bearing Retainer to Trans. Case	5/16–18, 25-30
	3/8–16, 25-30
	7/16–14, 40-45
Output Shaft Bearing Retainer to Trans. Case	3/8–16, 20-25
	7/16–14, 30-38
	1/2–13, 50-62
	5/8–11, 96-120
Parking Brake to Trans. Bearing Retainer	1/2–20C, 45-55
	5/8–18, 180-220
	7/16–20, 50-70
Rear Cross Shaft Housing to Adapter or Trans. Assy.	7/16–14, 30-38
Remote Trans. Control Bracket to Frame	9/16–12, 110-130
Remote Trans. Control Bracket to Upper Shift Control	7/16–14, 26-32
Trans. Support Bracket to Transmission	3/8–16, 20-25
	5/8–11, 135-165

Bolts (Cont'd)	Torque Limits
Trans. Support Bracket to Transmission (Cont'd)	7/16–14, 53-65
Trans. Support Bracket and Bearing Retainer to Transmission	5/8–11, 96-120
	5/8–18, 115-140
Trans. Front Support Bracket and Trunnion to Transmission	5/8–11, 135-165
Trunnion Clamp to Bearing Retainer	1/2–20, 50-62
Nuts	**Torque Limits**
Adjusting Height Main Trans.	150-200
Bellcrank to Trans.	9/16–18, 70-90
	3/8–16C, 20-25
Bearing Retainer to Trans. (Main W/O Aux.)	1/2–20, 50-62
	5/8–18, 115-140
Drum Parking Brake to Companion Flange	3/8–24, 37-50
	7/16–20, 40-55
	1/2–20, 74-86
Handbrake Anchor Bar to Trans. Case (except 5-Speed Extra-Heavy Duty)	9/16–18, 100-110
Handbrake Drum to-U-Joint Flange (Engine End)	7/16–20, 45-50
	1/2–20, 75-80
	3/8–24, 30-35
Input Shaft Yoke to Aux. Trans.	1 1/4–18, 500-550
Insulators–Transmission Rear Support to Frame Brackets	3/4–16, 75-100
Insulator–Trans. Mounting Brackets to Trans. Support Bracket–Rear	3/4–16, 90-110
Insulator–Aux. Trans. to Frame Brackets	3/4–16, 195-235
	7/16–20, 40-55
	7/8–14, 150-200
Output Flange to Shaft (4-Speed Aux. Trans.)	500-550
Parking Brake Support and Transmission Support to Transmission	5/8–18, 115-140
Rear Support Plate to Trans. Aux. Case	5/8–18, 115-140
U-Joint Flange to Trans. Output Shaft	1.00–20, 250-300
	1 1/4–18, 500-550
	1 1/2–18, 550-600
Bolt and Nut	**Torque Limits**
Adjusting Height Auxiliary Trans.	150-200
Bellcrank Bracket to Crossmember	3/8–16, 20-25
	3/8–24, 24-30
Bellcrank to Mounting Bracket	9/16–18, 100-120
Brake Support Plate to Trans. Support Plate	1/2–20, 58-72
Insulator-Adjusting Studs to C/M	3/4–16, 195-235
Trans. Frame Brackets Mounting to Frame	1/2–20, 58-72
Trans. to Support Bracket–Rear	7/8–14, 150

CC 1040-C

PART 16-42 Spicer 5000 Five-Speed Transmission

Applies to B, C, F, LN-750 and C, CT, L, LT, LN, LNT, LTS 800-900

COMPONENT INDEX	Page	COMPONENT INDEX	Page
SPECIFICATIONS	42-05	Disassembly	42-04
SUB-ASSEMBLIES		Output Shaft	
Countershaft		Assembly	42-04
Assembly	42-04	Disassembly	42-04
Disassembly	42-04	TRANSMISSION ASSEMBLY	
Gearshift Housing		Assembly	42-03
Assembly	42-04	Description	42-01
Disassembly	42-04	Disassembly	42-03
Input Shaft		Installation	42-03
Assembly	42-04	Removal	42-02

DESCRIPTION

TRANSMISSION

The Model 5000 extra heavy-duty five-speed transmission (Fig. 1) is a manually shifted, synchromesh, helical gear type. Fifth forward speed is direct drive. The main drive gear bearing is a single row ball type. The mainshaft is supported by straight roller pilot bearings at the front and a single row ball bearing at the rear. The countershaft is mounted on a straight roller bearing at the front and a single row ball bearing at the rear. The reverse idler gear rotates on two straight roller bearing. Power take-off openings are provided on the right and left sides of the transmission case.

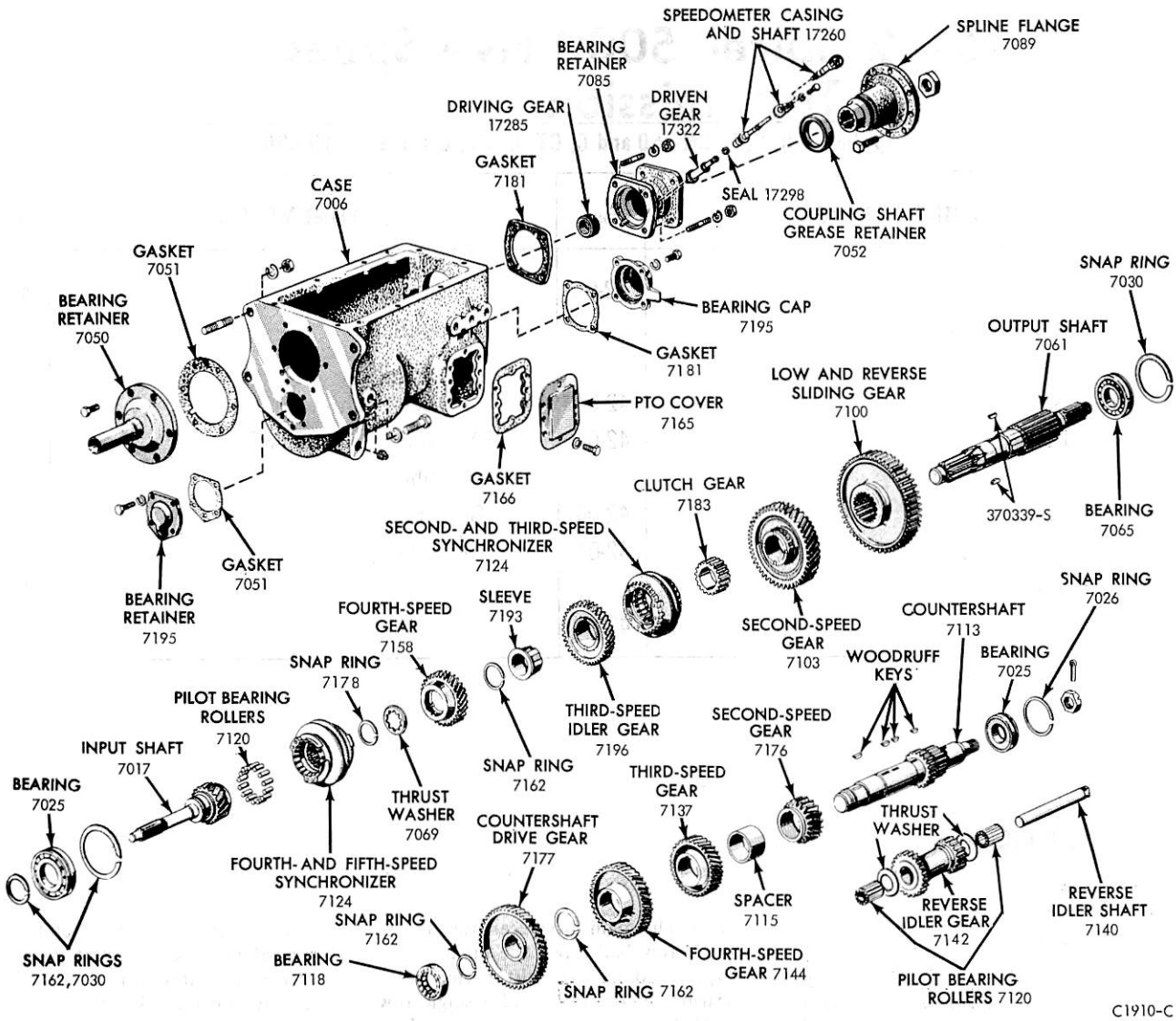

FIG. 1 Spicer Model 5000 Transmission—Disassembled

REMOVAL AND INSTALLATION

TRANSMISSION

Removal

1. Remove the floor mat and the floor plate.

Remove the gear shift lever housing and disconnect the parking brake lever. Cover the case opening.

2. On C-Series units, shift the transmission into neutral, release the lock and tilt cab forward. Remove the rear cross-shaft housing bolts. Tie the housing so that it does not fall. If necessary to provide room for removal of the transmission, raise the rear of the truck and install safety stands.
3. Drain the transmission. Disconnect the drive shaft (or the coupling shaft) at the parking brake drum. If the truck is equipped with a coupling shaft support, disconnect the support bracket and remove the coupling shaft.
4. Disconnect the parking brake adjusting rod and the speedometer cable. Remove the driven gear and its bearing (Fig. 1).
5. Remove the dust cover from the bottom of the clutch housing. Position a transmission jack under the transmission. Remove the top nuts and the bottom bolts and lock washers that secure the transmission to the clutch housing.
6. Move the transmission to the rear until the input shaft splines clear the clutch housing. Be careful that the clutch release bearing and hub do not drop out of the release lever fork. Lower the transmission to the floor.

Installation

1. Place the transmission on a transmission jack. Raise the transmission until the input shaft splines are aligned with the clutch disc splines. The clutch release bearing and hub must be properly positioned in the release lever fork. Slide the transmission forward until it is positioned to the clutch housing.
2. On C-Series units, position the cross-shaft housing on the transmission case adapter and install the mounting bolts. Torque the bolts to specification.
3. Install the lock washers, the top nuts and the bottom bolts. Torque the bolts and nuts to specifications. Install the dust cover on the bottom of the clutch housing. Position the speedometer driven gear bearing and the gear. Connect the speedometer cable.
4. Connect the parking brake adjusting rod.
5. Install the coupling shaft in the support bracket. Connect the support bracket to the support plate. Connect the coupling shaft (or the drive shaft) at the transmission.
6. Install the shift lever housing. When positioning the gear shift lever housing, always lower it straight down onto the gear shift housing. Torque the gate plunger retainer to specification.
7. Lower the truck to the floor. Install the floor plate and the floor mat. Fill the transmission with the correct amount of the specified lubricant. Adjust the remote control shift linkage.
8. Check the clutch pedal free travel and adjust it if necessary.

DISASSEMBLY AND ASSEMBLY

TRANSMISSION

Disassembly

1. Remove the gear shift housing from the transmission case. Lift the housing straight up. Remove the detent balls from the housing and shift the transmission into two gears.
2. Remove the brake drum and spline flange.
3. Remove the brake shoe assembly. Remove the output shaft bearing retainer, speedometer driving gear and spacer (Fig. 1).
4. Remove the countershaft rear bearing retainer and gasket. Remove the countershaft nut.
5. Remove the left-side power take-off cover.
6. Remove the input shaft bearing retainer and gasket from the case. Using a soft drift, drive the input shaft out of the transmission case bore until the front bearing is exposed. Remove the bearing from the bore and slide the input shaft out of the case. Remove the pilot rollers from the drive gear.
7. With a hardwood or fiber block placed against the front side of the second-speed gear, drive the output shaft assembly rearward until the output shaft bearing clears the case. **Be careful not to butt the secondspeed gear against the countershaft reverse gear.** Remove the bearing from the output shaft (Fig. 2).
8. Slide the first-speed gear off the output shaft as the shaft assembly is removed from the case.
9. Remove the countershaft rear bearing outer race snap ring. Remove the bearing, using a standard puller.
10. Work the countershaft toward the rear of the case until it clears the front bearing and lift the assembly out of the case.
11. Remove the countershaft front bearing retainer and retainer gasket. Tap the bearing out of the front of the case.
12. Remove the reverse idler gear and remove the bearings from the gear bores.
13. Remove any of the 14 output shaft pilot rollers which may have dropped into the case.

Assembly

Coat all parts with transmission lubricant to prevent scoring when the transmission is first operated.

1. Tap the countershaft front bearing into the case. Place a new gasket on the bearing retainer and install it. Line up the oil return holes in the retainer, gasket and case. Torque the retaining bolts to specification.
2. Place the assembled countershaft in the transmission case. Start the shaft in the front bearing.
3. Drive the countershaft rear bearing onto the countershaft and into the case with Tool T53T-7065-B.
4. Place the bearings in the reverse idler gear and install the gear in the case. Drive the idler gear shaftt into position and install the power takeoff cover.
5. Tap the input shaft and bearing into the case. Place the output shaft pilot roller bearing rollers in the input shaft.
6. Install the input shaft bearing retainer **without a gasket** and tighten the bolts to bottom the retainer on the bearing outer race snap ring. With a feeler gauge, check the clearance between he bearing retainer gasket surface and the case.
7. Use a gasket pack that will seal between the bearing retainer and case. Prevent any end play at the bearing outer race snap ring. Install the bearing retainer with the oil drain-hole in line with the gasket and case holes. Torque the retainer bolts to specification.
8. Install the low and reverse gear on the output shaft and position the assembly in the case. Drive the output shaft bearing into position with Tool T57L-600-A.
9. Shift the transmission into two gears. Install the countershaft nut and torque to specification. Install the countershaft rear bearing retainer. Torque the retainer bolts to specification.
10. Install a new oil seal in the output shaft bearing retainer. Place the spacer and speedometer driving gear on the output shaft and install the bearing retainer. Torque the bolts to specification.
11. Install the parking brake shoe assembly.
12. Install the brake drum and the spline flange. Torque the output shaft nut to specification.
13. Shift the transmission and gear shift

housing into neutral and install the gear shift housing. Torque the bolts to specification.

SUB-ASSEMBLIES

OUTPUT SHAFT

Disassembly

1. Remove the fourth and fifth-speed synchronizer assembly, snap ring and thrust washer at the front of the fourth-speed gear (Fig. 1). Remove the gear.
2. Remove the snap ring at the front of the third-speed gear sleeve. Bounce the front of the output shaft on a hardwood block to remove the second and third-speed synchronizer.
3. Place the output shaft in a press, with the rearward side of the second-speed gear resting on the press bed. press the output shaft out of the second and third-speed synchronizer clutch gear and second-speed gear.

Assembly

1. Place the second-speed gear onto the output shaft with the clutch teeth toward the front.
2. Install the two Woodruff keys in the output shaft. Press the second and third-speed synchronizer clutch gear onto the output shaft.
3. Place the second and third-speed synchronizer and third-speed gear and gear sleeve on the output shaft. Press the sleeve onto the shaft until it bottoms on the synchronizer clutch gear. **The third-speed gear sleeve slots must line up with the Woodruff keys in the output shaft.**
4. Remove the assembly from the press and install the snap ring at the front of the third-speed gear sleeve.
5. Install the fourth-speed gear, thrust washer and snap ring on the output shaft. Install the fourth and fifth-speed synchronizer on the output shaft.

COUNTERSHAFT

Disassembly

If the countershaft or a countershaft gear is to be replaced, remove the snap rings and press the gears off, one at a time. To remove the second-speed gear, use the tool shown in Fig. 3.

Assembly

Press the gears and the spacer onto the shaft, one at a time, and install the snap rings (Fig. 1). **Install the Woodruff keys one at a time with their respective gears.**

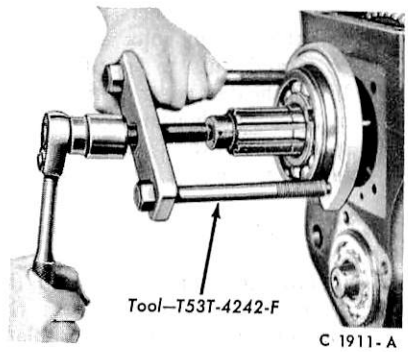

FIG. 2 Removing Output Shaft Bearing

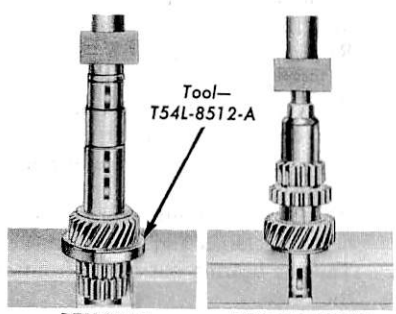

FIG. 3 Removing and Installing Second-Speed Gear

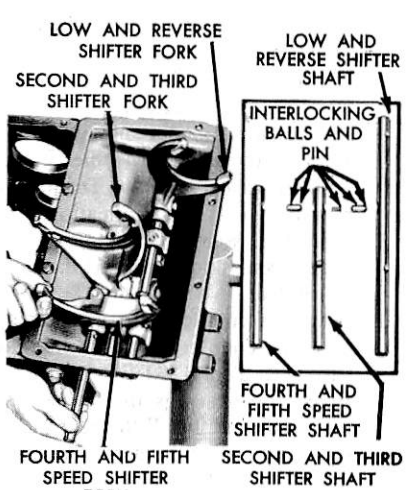

FIG. 4 Gear Shift Housing

INPUT SHAFT

Disassembly

Remove the input shaft bearing only for replacement. Remove the retaining snap ring and press the bearing off the shaft, using Tool T53T-4242-F6.

Assembly

Press the input shaft bearing onto the shaft using Tool T57L-600-A.

GEARSHIFT HOUSING

Disassembly

1. Attach the gear shift housing to the transmission case as shown in Fig. 4. Cut the lock wire from the retaining screws in the shifter forks and gates.
2. Mark the shifter forks, shafts and gates for correct assembly. Shift the shafts into neutral. Drive out the housing plugs at the front of the shafts (Fig. 5).
3. Remove the fourth and fifth-speed fork retaining screw. Slide the shaft out of the front of the housing.
4. Remove the second and third-speed fork and shaft. Remove the interlocking pin from the shaft (Fig. 4).
5. Remove the low and reverse shifter shaft, fork and gate. Remove the interlocking pin and plungers from the housing.

Assembly

1. Place the low and reverse shifter gate and fork in the housing. Slide the shaft into the housing and through the gate and fork. Install the retaining screws in the gate and fork. Torque the screw to specification and secure with lock wire.
2. Install two plungers in the housing interlocking bore between the low and reverse and second and third shifter shaft bores. Install the interlock pin in the shaft and the second and third-speed fork in the housing. Slide the shaft into the housing and through the fork. Install the retaining screw and secure it with lock wire.
3. Install the interlocking pin and plunger in the housing interlocking bore between the second and third-speed and fourth and fifth-speed shifter shaft guides. Install the fourth and fifth-speed shaft and fork. Install the retaining screw and secure it with lock wire.
4. Check the operation of the interlocking system. Coat the outer edge of the housing plugs with sealer and install them. Remove the housing from the transmission case.

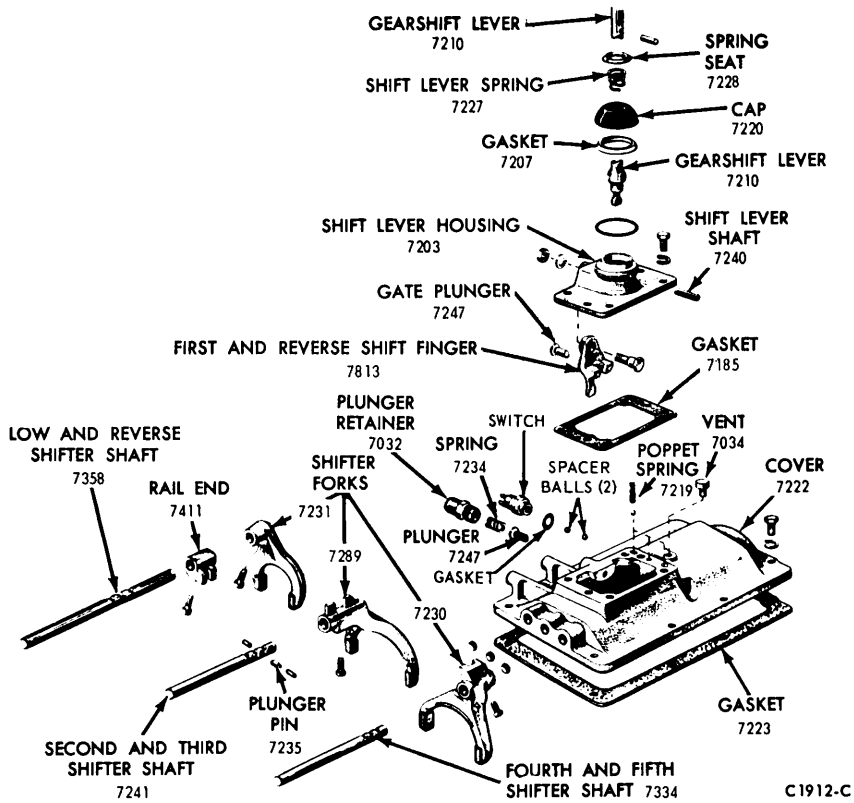

FIG. 5 Gear Shift Housing—Disassembled

SPECIFICATIONS

APPROXIMATE LUBRICANT REFILL CAPACITY (PINTS)

Transmission	US	IMP
Spicer 5000 (SAE 50 Engine Oil) (ESE M2C39-A)	13	10 75

CC1108-A

TORQUE LIMITS

Transmission – Spicer 5000	Ft-Lbs
Companion Flange Lock Nut	500-550
Countershaft Lock Nut	500-550
Flywheel Housing to Transmission Bolts	60-80
Input Shaft Bearing Retainer Cap Screws	60-80
Output Shaft Bearing Retainer Cap Screws	60-80
P.T.O. Cover Cap Screws	10-15
Shift Fork to Rod Cap Screw	40-50

CC1158-A

PART 16-43 Spicer 6000 Five Speed Transmission

Applies to L, LN, LNT, LT, LTS, C, CT-900, L, LN, LNT, LTS, LT, C-8000

COMPONENT INDEX	Page	COMPONENT INDEX	Page
SPECIFICATIONS	43-06	Disassembly	43-05
SUB-ASSEMBLIES		Output Shaft	
Countershaft		Assembly	43-05
Assembly	43-05	Disassembly	43-05
Disassembly	43-05	TRANSMISSION ASSEMBLY	
Gearshift Housing		Assembly	43-03
Assembly	43-06	Description	43-01
Disassembly	43-05	Disassembly	43-03
Input Shaft		Installation	43-02
Assembly	43-05	Rear Mount Adjustment	43-01
		Removal	43-02

DESCRIPTION

TRANSMISSION

The Model 6000 five-speed transmission is a manually shifted, synchromesh, helical gear type. Fifth forward speed is direct drive. The main drive gear bearing is a single row ball type. The mainshaft is supported by straight roller pilot bearings at the front and a single row ball bearing at the rear. The reverse idler gear rotates on two straight roller bearings. A power take-off opening is provided on the right and left side of the transmission case.

ADJUSTMENTS

REAR MOUNT

1. With the transmission weight off the mounting studs, torque the upper retaining nuts to specifications, and install the cotter pins (Fig. 1).
2. Loosen the lower retaining nut and the lock nut as necessary so that the transmission rear end hangs freely.
3. Insert a feeler gauge (0.06 inch) between the lower retaining nut and its washer (Fig. 1). **Do not apply pressure to the engine or the transmission. If necessary, back up the lower retaining nut to the stud shoulder.**
4. Turn the lower retaining nut downward until there is slight pressure on the gauge.
5. Repeat steps 2, 3 and 4 for the other side of the support.
6. Torque the lock nuts to specification.

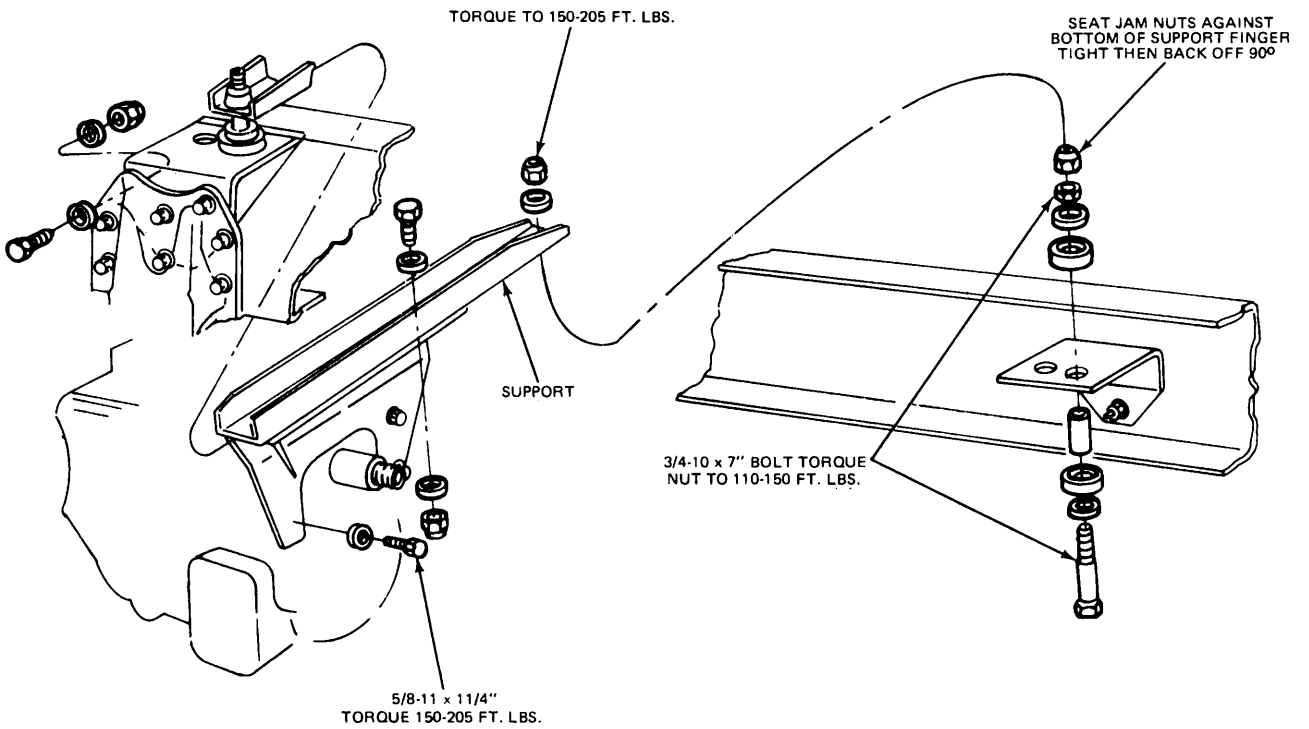

FIG. 1 Transmission Rear Support

REMOVAL AND INSTALLATION

TRANSMISSION

Removal

1. On an L-Series truck, remove the floor mat and the floor plate.
2. Remove the low and reverse gate plunger (Fig. 2).
3. Remove the gear shift lever housing, and disconnect the parking brake lever if so equipped.
4. On a C-Series truck, shift the transmission into neutral, release the lock, and tilt the cab forward.
5. On a C or CT truck, remove the cross-shaft housing bolts and tie the housing out of the way.
6. Disconnect the drive shaft (or coupling shaft) at the transmission. If the truck is equipped with a coupling shaft support, disconnect the support bracket and remove the coupling shaft.
7. Disconnect the speedometer cable at the transmission. If the truck is equipped with a parking brake, remove the adjusting rod.
8. Disconnect the clutch linkage at the clutch release arm. If the truck is equipped with a slave cylinder, disconnect the slave cylinder return spring. Remove the slave cylinder mounting bolts and position the slave cylinder out of the way.
9. Position a jack under the transmission and raise the transmission slightly to relieve pressure at the side rail mounting brackets.
10. Remove the side rail bracket stud nuts, insulators, and reinforcements, and then remove each side rail bracket.
11. Remove the dust cover from the bottom of the clutch housing. After removing the clutch housing to engine attaching bolts, pull the transmission rearward to clear the input shaft.
12. Raise the truck to provide clearance in removing the transmission. Install safety stands, and then remove the transmission from under the truck.

Installation

1. Place the transmission on a transmission jack (or chain hoist) and position the transmission so that the input shaft splines are aligned with the clutch disc splines. The clutch release bearing must be properly positioned in the release lever fork. Slide the transmission forward until it is in position on the clutch housing.
2. Install the clutch housing attaching bolts and torque them to specifications. Install the clutch housing dust cover.
3. Install the side rail brackets and torque the mounting bolts to specifications. Position the rear support studs, insulators, washers, and nuts as shown in Fig. 1 and adjust the studs.

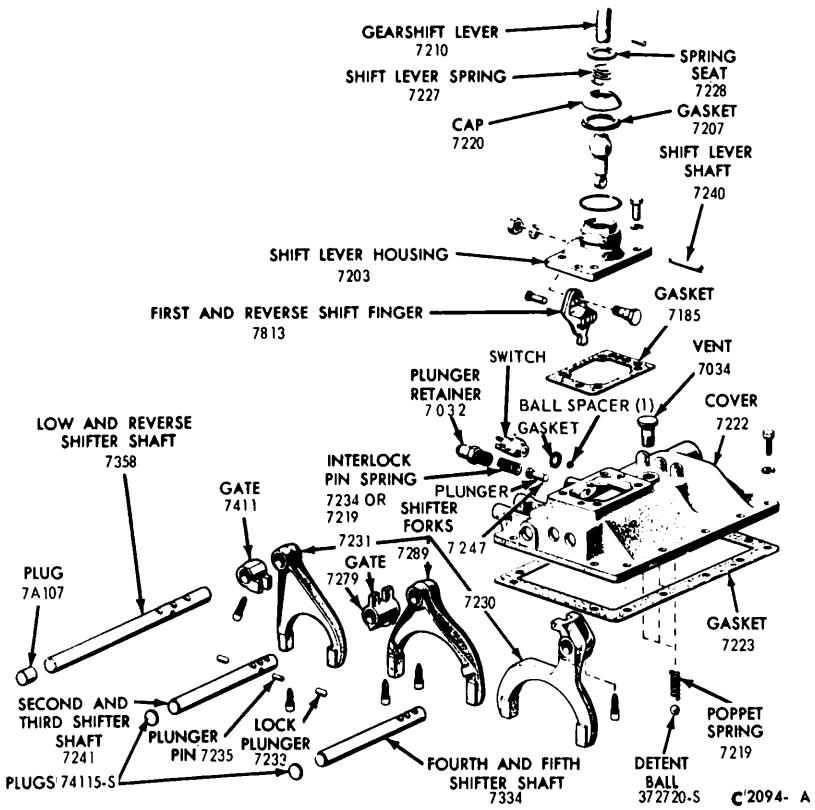

FIG. 2 Gear Shift Housing

4. Connect the clutch linkage to the clutch release arm. If the truck is equipped with a slave cylinder, install the slave cylinder and connect the slave cylinder return spring.
5. Connect the speedometer cable. If the truck is equipped with a parking brake, connect the adjusting rod.
6. Install the coupling shaft in the support bracket, and connect the support bracket to the support plate. Connect the coupling shaft (or the drive shaft) at the transmission.
7. Install the shift lever housing. Install the low and reverse gate plunger in the shaft finger before installing the shift lever housing. **When positioning the gear shift lever housing, always lower it straight down onto the gear shift housing.** Torque the gate plunger retainer to specification.
8. Lower the truck to the floor, and install the floor plate and the floor mat. On a C-Series truck, lower the cab.

DISASSEMBLY AND ASSEMBLY

TRANSMISSION

Disassembly

1. On a C-Series installation, remove the gear shift housing from the transmission case. **With the transmission in neutral, lift the housing straight up.**
2. Shift the transmission into 2 gears, and remove the parking brake drum and the spline flange.
3. Remove the brake shoe assembly.
4. Remove the input shaft bearing retainer and gasket. Tap the input shaft and bearing out through the front of the case.
5. Remove the output shaft pilot bearing from the pocket of the input shaft drive gear.
6. Remove the rear bearing retainers and gaskets from the output shaft and the countershaft. Remove the speedometer drive gear and spacer from the output shaft.
7. Remove the countershaft rear bearing retaining nut.
8. After removing the left power take-off cover, remove the reverse idler shaft.
9. Using a wood or fiber block against the front side of the second-speed gear (Fig. 3), drive the output shaft toward the rear until the rear bearing clears the case. Remove the bearing snap ring, and remove the bearing from the shaft.
10. Slide the low and reverse gear off the output shaft as the output shaft assembly is removed from the case.
11. Remove the countershaft rear bearing outer snap ring, and remove the bearing with Tool 7675-A.
12. Slide the countershaft toward the rear of the case until the shaft clears the front bearing, and lift the assembly out of the case.
13. Remove the countershaft front bearing retainer and gasket, and tap the bearing out of the case. Remove any of the 14 pilot rollers that might be in the transmission case, and take out the reverse idler gear. Remove the bearing from the idler gear.

Assembly

Coat all parts with transmission lubricant to prevent scoring when the transmission is first operated.

1. Tap the countershaft front bearing into the case. Position a new gasket on the front bearing retainer. Line up the oil return passages in the retainer, gasket, and case, and install the retainer. Torque the retainer bolts to specification.
2. Position the assembled countershaft in the transmission case, starting the shaft in the front bearing.
3. Drive the countershaft rear bearing onto the countershaft and into the case with Tool T53L-7065-B.
4. Place the bearings in the reverse idler gear, and position the gear in the case. Line up the flat surface on the rear end of the idler shaft with the position of the lock tang on the countershaft rear bearing retainer, and drive the idler shaft into position.

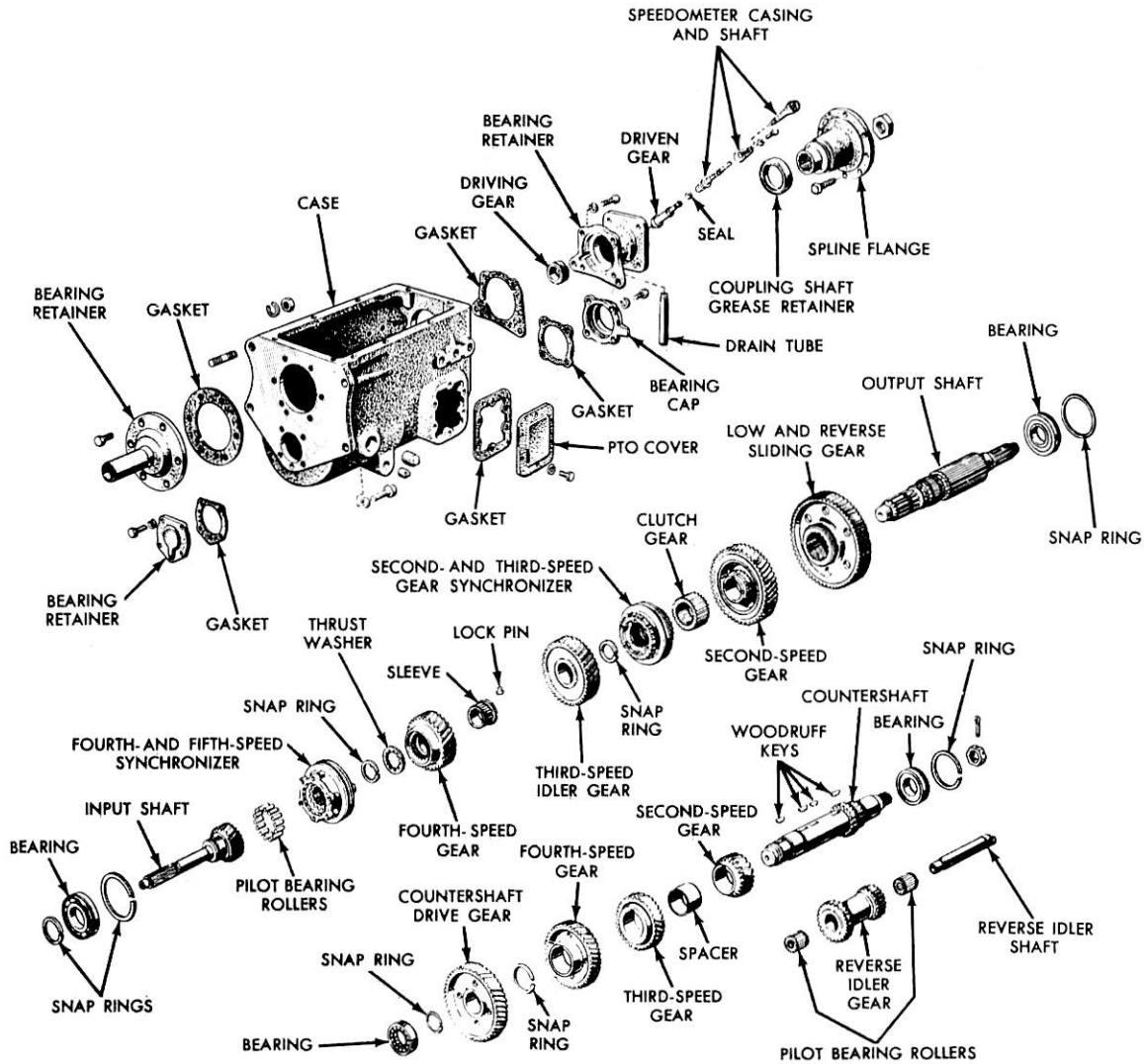

C 1932-A

FIG. 3 Transmission Disassembled

5. Position the output shaft assembly in the case.
6. With a wood block at the front of the shaft, drive the output shaft bearing into place, using Tool T57L-600-A.
7. Place the output shaft pilot rollers in the rear of the input shaft, holding the rollers in position with Lubriplate. The last roller must be inserted endways.
8. Install the input shaft and bearing.
9. Shift the transmission into 2 gears, install the countershaft rear bearing nut, and torque the nut to specification.
10. Install the countershaft rear bearing retainer, and torque the retainer bolts to specification.
11. Install a new oil seal in the output shaft rear bearing retainer and place the spacer and the speedometer drive gear on the shaft. Install the bearing retainer, and torque the retainer bolts to specification.
12. Install the input shaft bearing retainer **without a gasket,** and tighten the bolts to bottom the retainer on the bearing outer race snap ring. With a feeler gauge, check the clearance between the retainer gasket surface andthe case. This clearance should be 0.010-0.015 inch.
13. Select a gasket pack that will seal the oil between the retainer and the case and also prevent end play at the bearing outer race snap ring. Install the retainer, with the oil-drain hole in line with the gasket and case holes. Torque the retainer bolts to specification.
14. Position the brake shoe assembly, install the retaining bolts, and torque them to specification.
15. Install the U-joint flange, and torque the flange nut to specification.
16. **Install the parking brake drum and torque the mounting nuts to specification.**
17. Shift the transmission into neutral, and install the gear shift housing. Install the power take-off cover. Torque the mounting bolts to

specification. Fill the transmission with the specified lubricant.

SUB-ASSEMBLIES

OUTPUT SHAFT

Disassembly

1. Remove the fourth and fifth-speed synchronizer assembly, and position the shaft (threaded end downward) in a soft-jawed vise. Remove the fourth-speed gear snap ring, the thrust washer, and the fourth-speed gear (Fig. 3).
2. Using the weight of the shaft and gears as a hammer, bounce the front end of the shaft on a hardwood block to force off the fourth-speed gear sleeve and the third-speed gear. Remove the second and third-speed gear synchronizer. Remove the snap ring, and slide the synchronizer clutch gear and the second-speed gear off the shaft.

The splines on the output shaft make use of machined notches (Fig. 4). The purpose of these notches is to prevent the transmission from walking out of gear under load conditions.

Assembly

Lubricate all free-running gear bearing bores and shaft surfaces.

1. Slide the second-speed gear and the synchronizer clutch gear onto the shaft. Install the clutch gear retaining snap ring.
2. Slide the second and third-speed synchronizer (with the longer hub to the rear) onto the shaft, and press on the third-speed gear. Install the lockpin.
3. Install the fourth-speed gear sleeve **(do not press the sleeve flange) and the fourth-speed gear. Position the thrust washer and install the snap ring. Slide the fourth and fifth-speed synchronizer onto the shaft. The brass synchronizer cones must mate with the gear cones.**
4. Position the low and reverse sliding gear on the shaft.

COUNTERSHAFT

Disassembly

If the countershaft or a countershaft gear is to be replaced, remove the snap rings and press off the gears (and the spacer, if necessary) one at a time. To remove the second-speed gear, use Tool T54L-8512-A. Remove the 3 Woodruff keys at the front of the shaft before pressing off the spacer and the second-speed gear (Fig. 3).

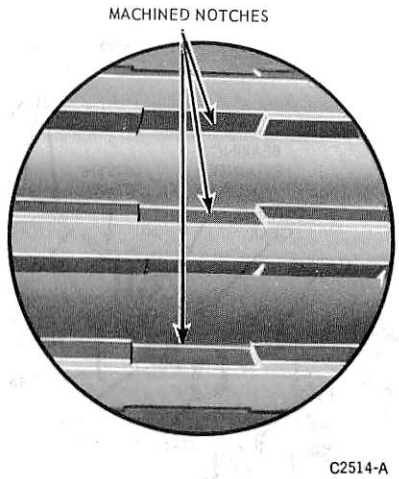

FIG. 4 Machined Notches in Output Shaft

Assembly

Press the gears and the spacer onto the shaft, one at a time, and install the snap rings (Fig. 3). **Install the Woodruff keys one at a time with their respective gears.**

INPUT SHAFT

Disassembly

The input shaft bearing should be removed only for replacement. Remove the bearing with the tool shown in Fig. 5.

Assembly

Press the input shaft bearing onto the shaft.

GEAR SHIFT HOUSING

Disassembly

1. Attach the gear shift housing to the transmission case, as shown in Fig. 6. Cut the lock wire from the retaining screws in the shifter forks and gates (Fig. 2).
2. Mark the shifter forks, shafts, and gates for correct assembly, shift the shafts into neutral. Drive out the expansion plugs at the front of the shafts.
3. Remove the fourth and fifth-speed fork retaining screw, and slide the shaft out of the front of the housing. **The shifter shaft detent balls and springs are installed in blind holes at the rear end of the shifter shafts (Fig. 6).**
4. Remove the second and third-speed fork and shaft. Remove the interlocking pin from the shaft.
5. Remove the low and reverse shifter shaft, fork, and gate. Remove the interlocking plungers from the housing.

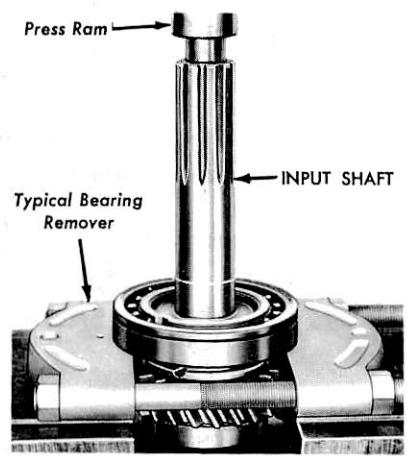

FIG. 5 Input Shaft Bearing Removal

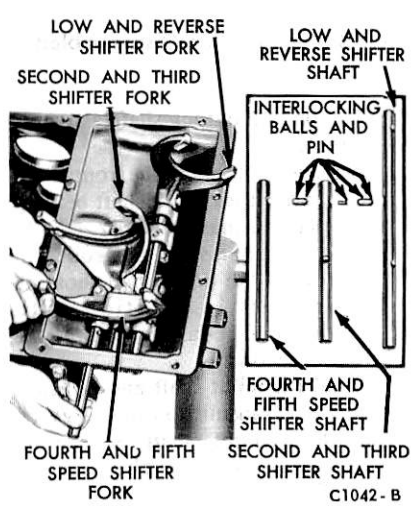

FIG. 6 Gear Shift Housing Mounting

Assembly

1. Position the low and reverse shifter gate and fork in the housing and through the gate and the fork.
2. Place the detent ball and spring in the housing. Push the ball down and slide the shaft past it. Install the retaining screws in the gate and the fork. Secure the screws with lock wire.
3. Install the interlocking pin and plunger in the housing interlocking bore between the low-and-reverse and the second and third shifter shaft bores. Install the interlock pin in the bore, and position the second and third-speed fork in the housing.
4. Slide the shaft into the housing and through the fork. Install the detent spring and ball. Install the fork retaining screw, and secure the screw with lock wire.
5. Install the other interlocking plunger in the bore, and install the fourth and fifth-speed shaft and fork. Install the detent spring and ball. Install the retaining screw, and secure it with lock wire.
6. Check the operation of the interlocking system. After coating the outer edge of new expansion plugs with sealer, install them, and remove the housing from the transmission case.

SPECIFICATIONS

APPROXIMATE LUBRICANT REFILL CAPACITY (PINTS)

Transmission	US	IMP
Spicer 6000 (SAE 50 Motor Oil) (ESE M2C39-A)	17	14.25

CC1110-A

TORQUE LIMITS

Transmission – Spicer 6000	Ft-Lbs
Companion Flange Lock Nut	500-550
Countershaft Lock Nut	500-550
Countershaft Bearing Cap Bolts	60-80
Flywheel Housing to Transmission Bolts	120-150
(Aluminum Case)	70-75
Input Shaft Bearing Retainer Cap Screws	60-80
Output Shaft Bearing Retainer Cap Screws (1/2-13)	60-80
(5/8-11)	90-115
P.T.O. Cover Cap Screws	10-15
Shift Fork to Shaft Cap Screw	40-50

CC1159-A

PART 16-44 Spicer 8000 Five-Speed Transmission

This Information Applies To: L, LN, LNT-9000 Models Only

COMPONENT INDEX	Page	COMPONENT INDEX	Page
TRANSMISSION		TRANSMISSION - Continued	
Assembly	44-03	Main Shaft	
Countershaft		Assembly	44-04
Assembly	44-04	Disassembly	44-04
Disassembly	44-04	Rear Mount Adjustment	44-01
Description	44-01	Removal	44-02
Disassembly	44-03		
Installation	44-02	SPECIFICATIONS	44-09

DESCRIPTION

TRANSMISSION

The Spicer 8000 series is a five-speed non-synchronized transmission available with either a direct drive or over-drive ratio in fifth gear. All gears except reverse are helical cut in constant mesh.

All rotating gears and shafts are carried on ball or roller bearings and are splash lubricated.

A clutch brake slows the input gear and related train when the clutch is disengaged, aiding smooth gear changes.

Power take-off openings are provided on both sides of the transmission.

ADJUSTMENTS

REAR MOUNT

1. With the transmission weight off the mounting studs, torque the upper retaining nuts to specification and install the cotter pins (Fig. 1).
2. Loosen the lower attaching nut and the lock nut as necessary so that the transmission rear end hangs freely.
3. Insert a feeler gauge (0.06 inch) between the lower attaching nut and its washer (Fig. 1). **Do not apply pressure to the engine or the transmission. If necessary, back up the lower retaining nut to the stud shoulder.**
4. Turn the lower attaching nut downward until there is slight pressure on the gauge.
5. Repeat steps 2, 3 and 4 for the other side of the support.
6. Torque the lock nuts to specification.

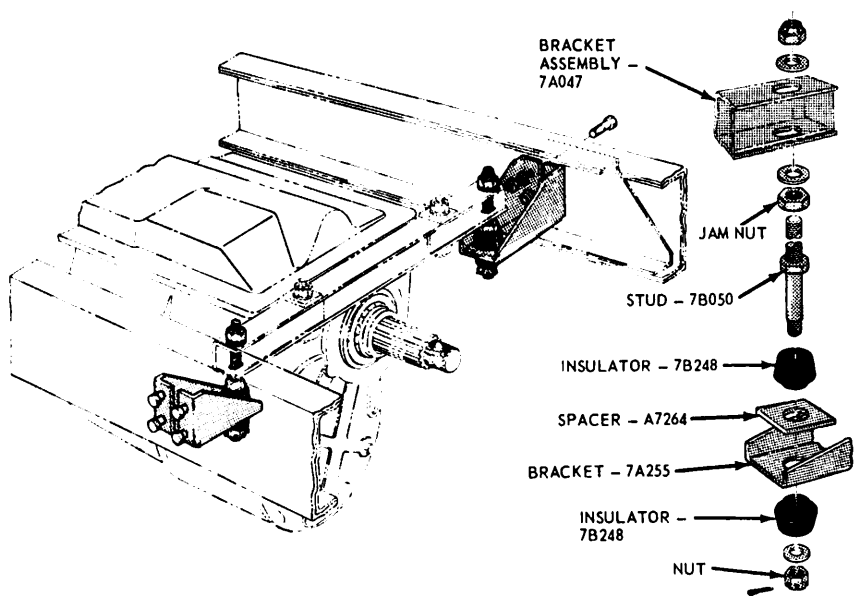

FIG. 1 Transmission Rear Supports

REMOVAL AND INSTALLATION

TRANSMISSION

Removal

1. Remove the floor mat and the floor plate.
2. Position the shift lever in neutral. Remove the low and reverse gate plunger (Fig. 2).
3. Remove the gear shift lever housing or tower, and disconnect the parking brake lever if so equipped.
4. Disconnect the drive shaft (or coupling shaft) at the transmission. If the truck is equipped with a coupling shaft support, disconnect the support bracket and remove the coupling shaft. Disconnect the electrical lead from the right side of the transmission.
5. Disconnect the speedometer cable at the transmission. If the truck is equipped with a parking brake, remove the adjusting rod.
6. Disconnect the clutch linkage at the clutch release arm. If the truck is equipped with a slave cylinder, disconnect the slave cylinder return spring. Remove the slave cylinder mounting bolts and position the slave cylinder out of the way. If the vehicle is so equipped, shut off the fuel tank valves (both tanks) and remove the cross-over fuel line, and the shield.
7. Remove the clutch housing lower bolts. Position a jack under the transmission, and properly secure it (tool No. LRE 1790). Raise the transmission slightly to relieve pressure at the side rail mounting brackets. Remove the clutch housing upper bolts.
8. After removing the clutch housing to engine attaching bolts, pull the transmission rearward to clear the input shaft.
9. Raise the truck to provide clearance in removing the transmission. Install safety stands, and then remove the transmission from under the truck.

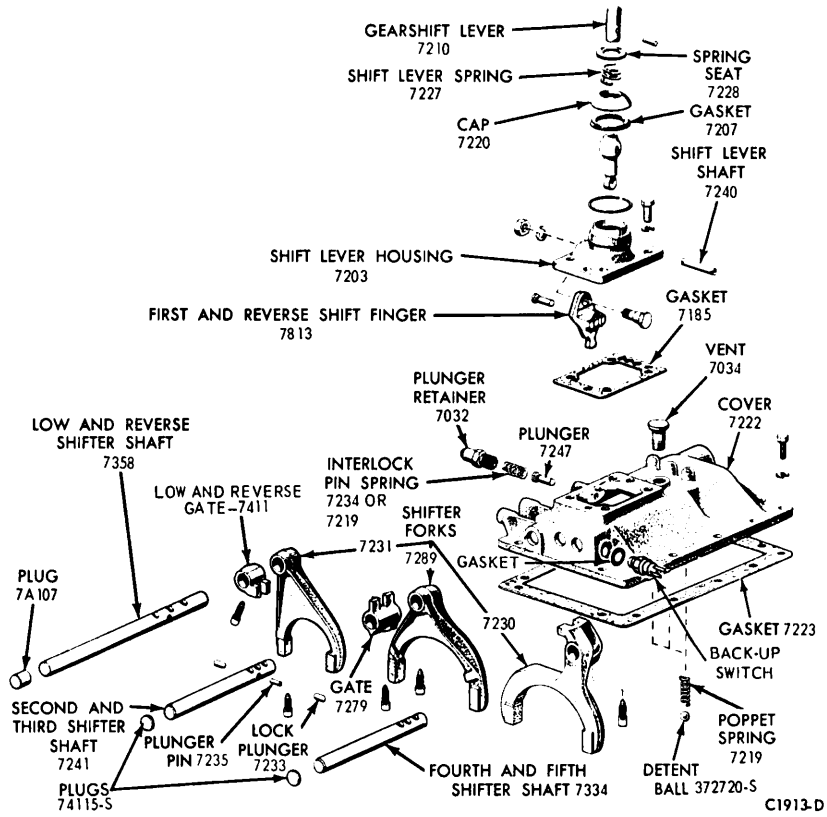

FIG. 2 Gear Shift Linkage

Installation

1. Place the transmission on a transmission jack (or chain hoist) and position it so that the input shaft splines are aligned with the clutch disc splines. The clutch release bearing must be properly positioned in the release lever fork. Slide the transmission forward until it is in position on the clutch housing.
2. Install the clutch housing attaching bolts and torque them to specifications. Install the clutch housing dust cover.
3. Connect the clutch linkage to the clutch release arm. If the truck is equipped with a slave cylinder, install the slave cylinder and connect the slave cylinder return spring.
4. Connect the speedometer cable. If the truck is equipped with a parking brake, connect the adjusting rod. Connect the electrical lead to the right side of the transmission.
5. Install the coupling shaft in the support bracket, and connect the support bracket to the support plate. Connect the coupling shaft (or the drive shaft) at the transmission.
6. Install the shift lever housing. Install the low and reverse gate plunger in the shaft finger before installing the shift lever housing. **When positioning the gear shift lever housing, always lower it straight down onto the gear shift housing.** Torque the gate plunger retainer to specification. If the vehicle is so equipped, apply sealer to the threads and install the cross-over fuel line. Open both of the fuel tank valves. Install the line shield.
7. Lower the truck to the floor, and install the floor plate and the floor mat.

DISASSEMBLY AND ASSEMBLY

TRANSMISSION

Disassembly

1. Shift the transmission into reverse gear with a bar (Fig. 3). Remove 13 bolts and washers that secure the cover to the case. Lift the cover off the case.
2. Remove the clutch release cross-shaft to release yoke screws (Fig. 4). Remove the shafts, yoke and clutch brake discs.
3. Remove the nuts that attach the input gear bearing retainer. Using two bolts as a tool, pull the bearing retainer and the input gear assembly out of the case.
4. Remove the parking brake drum and the speedometer driven gear and bushing.
5. Lock the transmission in two gears, remove the companion flange nut and pull the companion flange off the mainshaft with a puller.
6. Remove the assembly and the mainshaft rear bearing cap.
7. Remove the speedometer gear and the bearing spacer.
8. Move the mainshaft as far to the rear as possible by tapping on the mainshaft first-speed gear (largest diameter gear).
9. Install a standard bearing puller on the mainshaft rear bearing and remove it from the rear of the mainshaft (Fig. 5).
10. Remove the transmission rear cover, using a bolt as a puller (Fig. 6).
11. Remove the overdrive shift fork guide rod with a bolt and puller. Remove the fork from the case (Fig. 7).
12. Shift the transmission into two gears. Remove the countershaft rear cotter key and nut (Fig. 8).
13. Remove the countershaft over-drive clutch gear by pulling on the collar or by attaching a puller to the three threaded holes in the clutch gear (Fig. 9).
14. Remove the fifth (or over-drive) countershaft gear and thrust washer (Fig. 10).
15. Pry the mainshaft fifth (or over-drive) gear off the shaft (Fig. 11).
16. Tap the mainshaft assembly toward the rear of the case and install a split-type puller on the mainshaft center bearing outer race. Tap the mainshaft forward as far as possible and then to the rear again. Secure a new grip on the bearing and repeat the process until the bearing is loose on the shaft (Fig. 12).
17. Remove the mainshaft and gears from the case (Fig. 13) by lifting the front of the mainshaft up and forward with a sling. The center bearing and the low-speed gear needle bearings will come off during the above operation.
18. Remove the lock wire from the countershaft rear bearing retainer nuts. Remove the nuts and the bearing retainer (Fig. 14).
19. Remove the reverse idler shaft with a puller (Fig. 15).
20. Remove the reverse idler gear. Two identical caged roller bearing assemblies support the gear and sleeve. The sleeve is keyed to the gear.
21. Pry the countershaft toward the rear of the case until a bearing puller can be installed on the rear bearing. Remove the bearing (Fig. 16). Remove the countershaft assembly (Fig. 17).

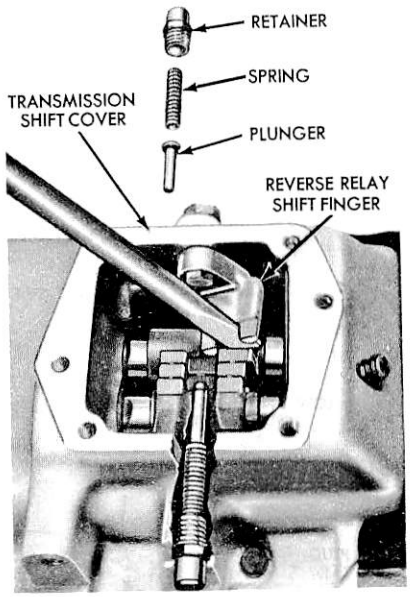

FIG. 3 Removing Over-Drive and Reverse Plunger and Spring

Assembly

1. Lower the countershaft assembly into the case, rear end first and down, so the rear of the countershaft enters the rear bearing bore (Fig. 17). Lower the front of the countershaft assembly until the front bearing will enter its bore in the case. Tap the rear of the shaft until the front bearing enters the bore.
2. Install the countershaft rear bearing, with the snap ring to rear, in the bore and on the countershaft. Tap into place with a tool that contacts the inner bearing race.
3. Assemble the reverse idler gear, sleeve, key and bearings. Place them in the case with the shift fork collar toward the rear of the transmission case (Fig. 15). The sleeve small diameter must go toward the front. It is marked Front.
4. Install the reverse idler shaft. The flat on the rear end of the shaft must align with the tang on the edge of the countershaft rear bearing retainer (Fig. 15).
5. Install the countershaft rear bearing retainer, with the tang locking the idler shaft. Install the bolts and

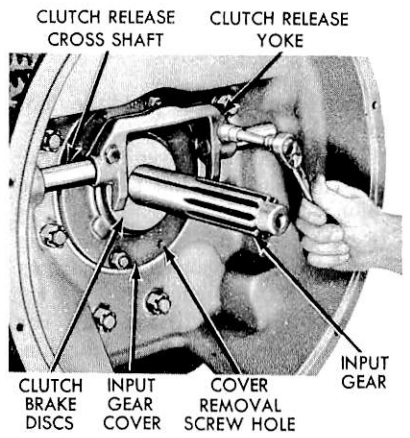

FIG. 4 Removing or Installing Clutch Yoke

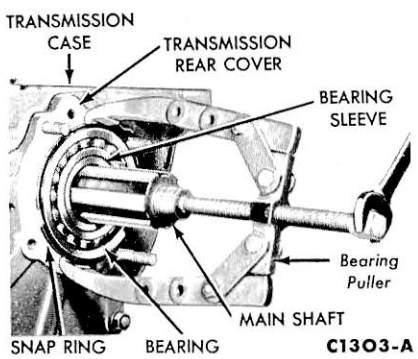

FIG. 5 Removing Mainshaft Rear Bearing

torque to specifications. Install the lock wire through the bolt heads.

6. Assemble a sling onto the mainshaft and gear assembly, as in removal, and lower the assembly into the case, rear end first. Start the center support bearing over the rear of the shaft and into the case center web with the bearing snap ring (if so equipped) toward the rear (Fig. 13).
7. Install the input gear, bearing and cap assembly, with a new gasket, into the front of the case. Pilot the mainshaft front bearing into place in the bore of the input gear. Start, but do not tighten the nuts.
8. Drive the mainshaft center support bearing into place with a tube or an arbor that bears on the bearing inner race.
9. Install the fifth (or over-drive) gear onto the rear of the mainshaft.
10. Install the fifth (or over-drive) gear thrust washer and gear onto the rear of the countershaft with the clutch teeth toward the rear (Fig. 10). Install the countershaft fifth (or over-drive) clutch collar and gear with the large diameters of the collar and gear toward the rear. Install the clutch gear nut and torque to specification (Fig. 8).
11. Place the pin on the inside of the mainshaft rear bearing sleeve and press the sleeve onto the rear of the mainshaft and against the mainshaft fifth (or over-drive) gear. Be sure the pin is aligned with a spline groove and the ground surface of the hub is toward the rear.
12. Install the fifth (or over-drive) shift fork and shaft guide. The long hub of the shift fork must face toward the front (groove in shift fork forward of the collar). Place the shift fork guide rod into the hole in the rear of the case through the shift fork and into the hole in the center web of the case.
13. Install the transmission rear cover, using a new gasket. Do not tighten the bolts.
14. Install the mainshaft rear bearing. It must pilot in the cover and in the case.
15. Install the mainshaft rear bearing thrust washer and speedometer drive gear.
16. Using a new gasket, install the rear bearing cap onto the transmission cover. Torque the cap bolts to specification.
17. Place the speedometer driven gear and bushing in the mainshaft rear bearing cap and secure with the two bolts and washers.
18. Torque the transmission rear cover bolts to specification.
19. Torque the input gear bearing cap bolts to specification.
20. Install the clutch release yoke and cross-shafts in the clutch housing. Install the clutch brake discs (Fig. 4).
21. Shift the transmission and the cover assembly to reverse position and install the shift cover, using a new gasket. Be sure the forks line up with the shift collars. Install the cover bolts and torque them to specification.

SUB-ASSEMBLIES

MAIN SHAFT

Disassembly

1. Place the mainshaft assembly, front up, in an arbor press as shown in Fig. 18.
2. Spread the snap ring (behind the front bearing) out of its groove. Using a tool similar to the one shown in Fig. 18, press the bearing, third and fourth-speed clutch gear, mainshaft third-speed gear, sleeve and mainshaft second-speed gear from the mainshaft.

Be careful not to lose the sleeve lock balls or the second and third-speed gear needle bearings (Fig. 19).

3. Remove the snap ring from between the drive gear and the bearing cap (Fig. 20). Pull the cap off toward the front of the drive gear.
4. Clean the staked areas of the nut and the gear and remove the nut with a spanner wrench. **The threads are left-hand.**
5. Press the bearing off the shaft.

Assembly

1. Press the ball bearing on the input gear with the shielded side of the bearing toward the gear. **Use a tool or an arbor that will bear on the inner bearing race.**
2. Install the bearing lock nut on the gear and tighten. Stake the nut into the slots in the gear shaft.
3. Place the bearing cap over the bearing and press into position.
4. Insert the snap ring into the slot in the bearing cap (Fig. 20).
5. Using Lubriplate or a comparable viscosity grease, assemble 2 rows of 71 needle bearings each, with the narrow spacer between them, onto the shaft diameter just to the front of the center splined area (Fig. 20). A space of one needle will exist in each row when properly assembled. Install the mainshaft second-speed gear over the needle bearings, with the clutch teeth toward the rear.
6. Install the mainshaft third-speed gear sleeve onto the front of the shaft with the flange facing the rear and the notches aligned with the splines and balls.
7. Place 2 rows of 71 needle bearings per row onto the sleeve with a spacer between the rows. Use grease.
8. Slide the mainshaft third-speed gear over the needle bearings with the clutch teeth toward the front (Fig. 19).
9. Press the mainshaft third and fourth-speed clutch gear onto the front of the mainshaft, flat side toward the rear and the clutch hub toward the front (Fig. 18).
10. Install the snap ring in its groove on the front of the mainshaft.
11. Press the front ball bearing on, with the beveled edge of the inner race toward the rear.
12. Press the third and fourth-speed clutch collar on the third and fourth-speed clutch gear, with the long portion of the hub toward the rear.
13. Slide the first and second-speed clutch gear onto the splines, with the shift fork collar toward the rear (Fig. 21).
14. Using grease, install 2 rows of 71 needle bearings per row, with the wide spacer between them, on the shaft diameter to the rear of the center splined area.
15. Place the mainshaft first-speed gear over the needle bearings with the clutch teeth toward the front.
16. Grease one side of the first-speed gear thrust washer and place it on the mainshaft with the greased side toward the first-speed gear. Set the mainshaft assembly aside.

COUNTERSHAFT

Disassembly

1. Remove the countershaft front bearing with a puller (Fig. 22).
2. Remove the snap ring from the front of the countershaft.
3. Press the countershaft drive gear off the countershaft, using a suitable arbor (Fig. 23). The remainder of the countershaft gears are removed in the same manner, using suitable arbors.

Assembly

1. Place the key in the countershaft second-speed gear position key-way. **Be sure the key is seated in the keyway.** Use the proper size arbor and press the second-speed gear on the shaft with the chamfered bore end toward the rear.
2. Insert the third-speed gear key in the shaft and press the third-speed gear on the shaft, with the long hub of the gear toward the front (away from the second-speed gear).

3. Place the power take-off gear key in position on the shaft. Press the power take-off gear on the shaft, with the long hub toward the front.
4. Insert the drive gear key in the shaft. Press the drive gear on with the long hub facing the power take-up gear (Fig. 24).
5. Install the snap ring in its groove in the front of the countershaft. Press the countershaft front bearing on. **Use an arbor that contacts the inner bearing row.**

GEAR SHIFT HOUSING

Disassembly

1. (It is not necessary to disassemble the shift cover unless the detent springs are weak or broken or if the forks and shafts are worn). Place the shift cover assembly on its side in a vise. Use brass or aluminum vise jaw covers. Remove the interlock hole plug.
2. Remove the lock wire and set screws from the reverse shift fork and bracket (Fig. 25).
3. Tap the reverse shift rod out through the front of the cover. The reverse rod hole plug will come out during the above operation. Hold a cloth over the rear of the rod, the poppet ball, and the spring hole, as the rear of the rod passes the hole. The ball will fly out. Remove the shift fork and bracket.
4. Remove the interlock through the hole in the side of the cover. A magnet will help.
5. Remove the lock wire and the set screw from the third and fourth-speed shift fork. Tap the third and fourth-shift rod out through the front of the cover. The plug and poppet ball will come out in the same manner as the reverse rod plug and ball did. Remove the third and fourth-speed shift fork. If not done previously, remove the small interlock pin from the rod.
6. Remove the short interlock through the hole in the side of the cover.
7. Remove the lock wire and set screw from the first and second-speed shift fork and bracket. Tap the first and second-speed shift rod out of the front of the cover. Do not lose the poppet ball. Remove the shift fork and bracket.
8. Remove the interlock pin and interlock.
9. Cut the lock wire from the set screws that secure the reverse fork and bracket to the shift rod. Remove the set screws, the rod, fork and bracket. Be careful of the poppet ball. Remove the lock-out plunger from the over-drive rod bracket.
10. Remove the four poppet ball springs from the holes in the cover.
11. Loosen the nut and washer, on the outside of the cover, and remove the stud, reverse relay shift finger and lock-out plunger from the cover.

Assembly

1. Place the reverse relay shift finger stud in the shift finger. The head of the stud must be on the same side as the shift slot (Fig. 25).
2. Place the reverse lock-out plunger in the reverse relay shift finger.
3. Position the reverse shift finger, and tap the stud through the shift cover housing. Secure the stud with the nut and washer.
4. Set the four shift rod poppet ball springs in the holes provided in the cover (Fig. 25).
5. Place the over-drive lock-out plunger in the over-drive shift rod bracket and slide the over-drive shift rod into the hole in the shift cover.
6. Start the shift rod in the cover and place the over-drive rod bracket on the shift rod.
7. Place the poppet ball on the spring, hole it down and slide the rod past it.
8. Position the upper over-drive shift fork on the rod, line up the set screw holes in the bracket and fork and install the set screws. The long hub of the fork will be toward the front of the cover. Torque the set screws to specification and lock wire.
9. Place a short interlock into the hole in the cover and push it through to the over-drive shift rod.
10. Slide the first and second-speed shift rod into the second hole from the right side of the front of the cover. Place the first and second shift rod bracket on the rod.
11. Install a small interlock pin in the rod. Place a poppet ball on the poppet spring. Hold the ball and spring compressed and slide the rod past the cover boss. Place the first and second-speed shift fork on the rod, with the long hub toward the front, and line up the set screw holes in the fork, bracket and rod. Install the set screws and torque to specification. Wire the screw heads.
12. Install a short interlock into the cover and push it through to the first and second-speed rod.
13. Slide the third and fourth shift rod into the front of the cover. Place a small interlock pin in the rod. Place the third and fourth-speed shift fork on the rod, with the long hub toward the front. Set the poppet ball on the spring and depress it. Slide the rod through the case boss. Line up the holes and install the set screw. Torque to specifications and lock wire.
14. Place the long interlock in the cover hole and push it over to the third and fourth-speed rod.
15. Start the reverse shift rod into the remaining hole in the front of the cover. Place the reverse bracket in position and slide the rod through it. Set a poppet ball on the poppet spring, hold down and push the shift rod past it. Install the reverse shift fork, line up and install the set screws. Torque them to specification and lock wire them (Fig. 3).
16. Install four expansion plugs in the shift rod holes in the front of the cover and expand them by striking with a flat-ended bar and hammer.
17. Install the interlock cross-hole plug in the side of the shift cover.

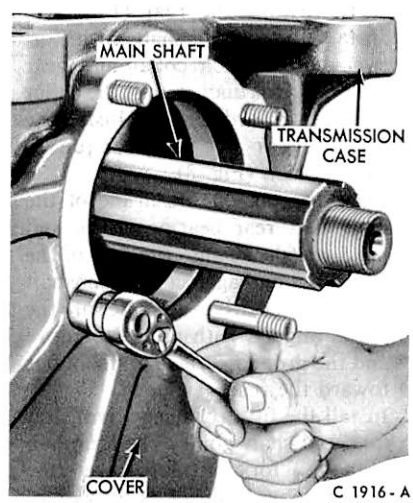

FIG. 6 Removing Transmission Rear Cover

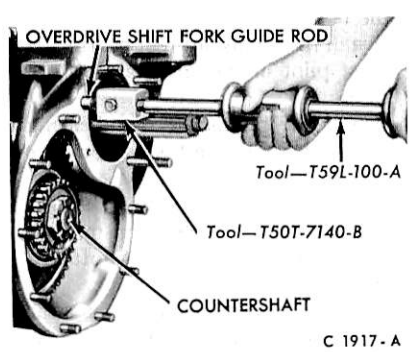

FIG. 7 Removing Over-Drive Shift Fork Guide Rod

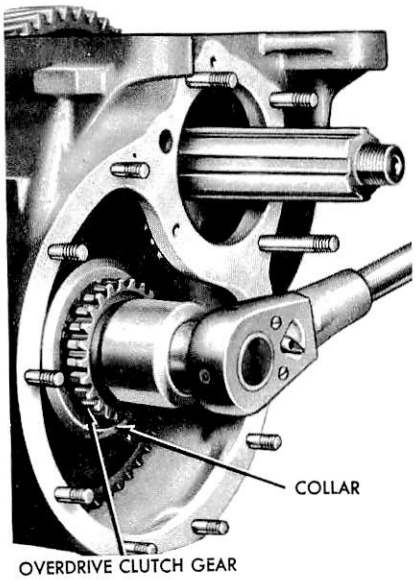

FIG. 8 Removing Countershaft Rear Nut

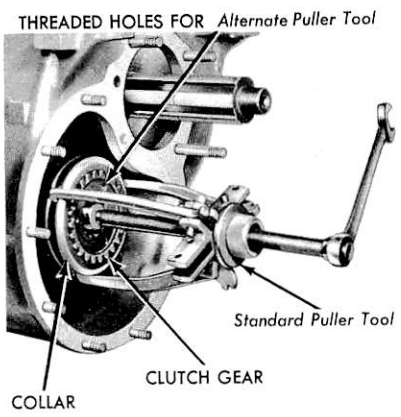

FIG. 9 Removing Countershaft Over-Drive Clutch Gear and Collar

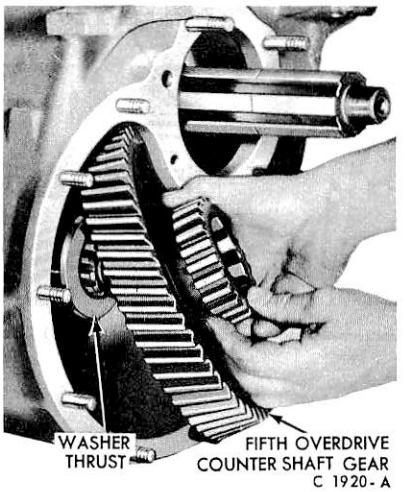

FIG. 10 Removing Countershaft Over-Drive Gear

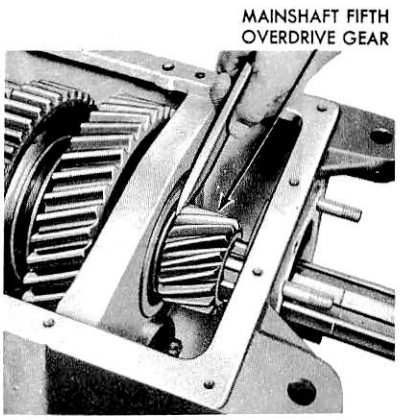

FIG. 11 Removing Mainshaft Over-Drive Gear

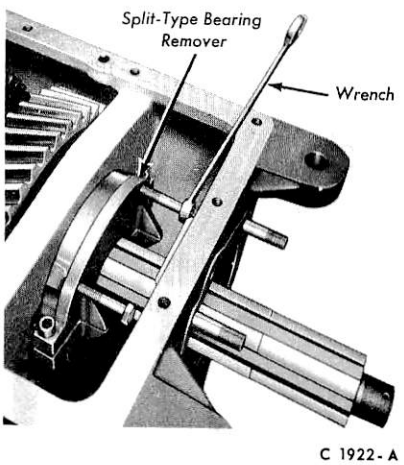

FIG. 12 Removing Mainshaft Center Support Bearing

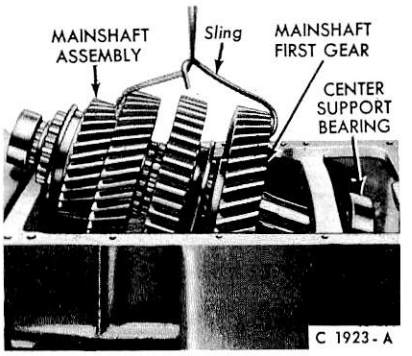

FIG. 13 Removing Mainshaft Assembly

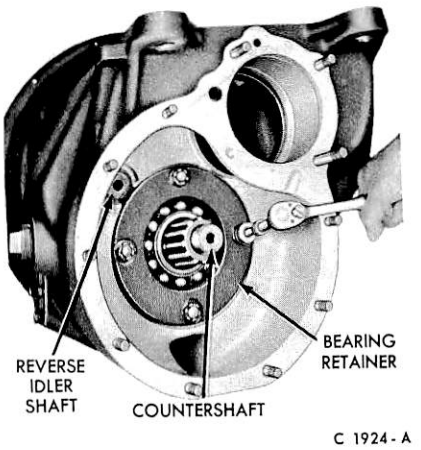

FIG. 14 Removing Countershaft Rear Bearing Retainer

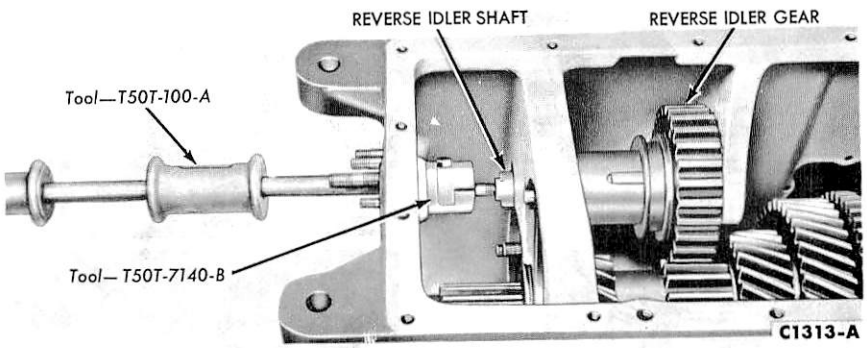

FIG. 15 Removing Reverse Idler Shaft

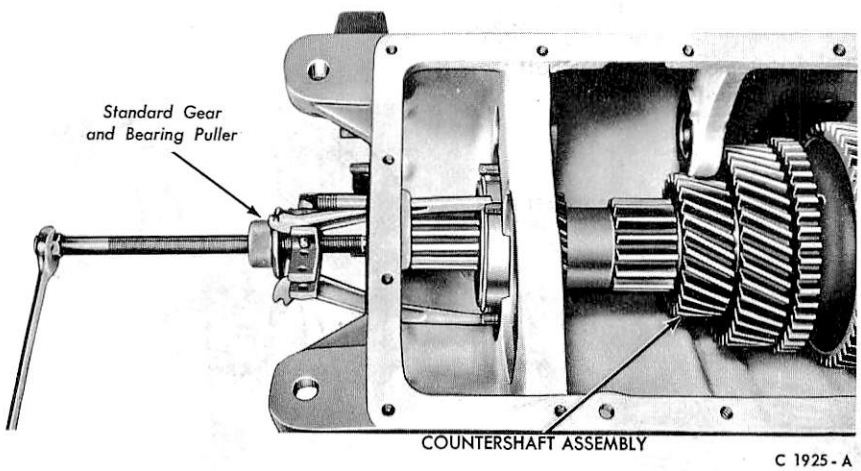

FIG. 16 Removing Countershaft Rear Bearing

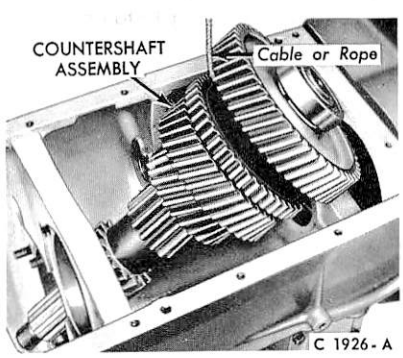

FIG. 17 Removing or Installing Countershaft

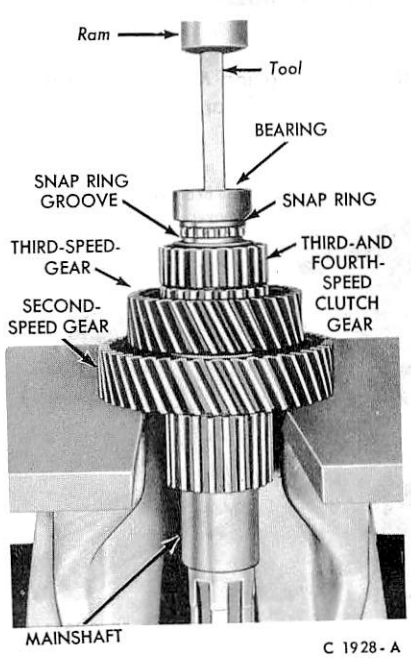

FIG. 18 Removing Mainshaft Gear

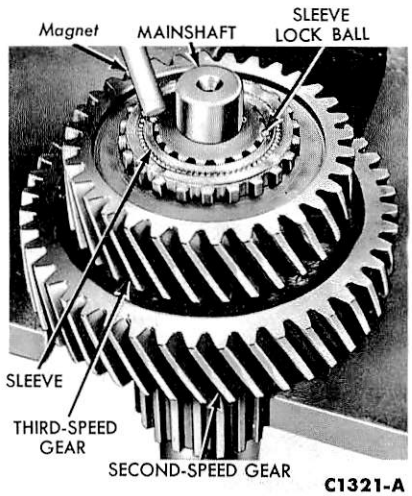

FIG. 19 Mainshaft Third-Speed Gear

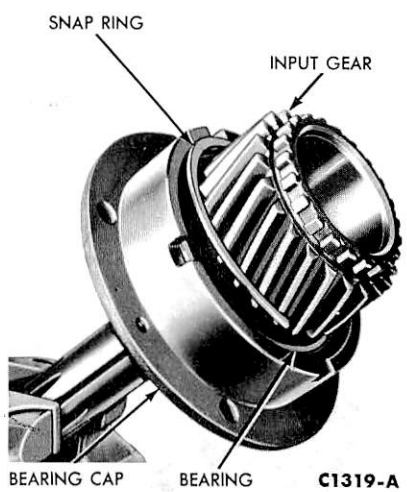

FIG. 20 Removing or Installing Input Gear Bearing Cap

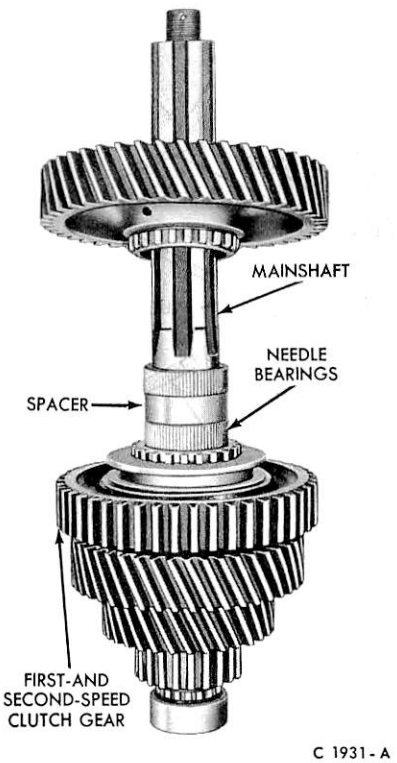

FIG. 21 Mainshaft First-Speed Gear Installation

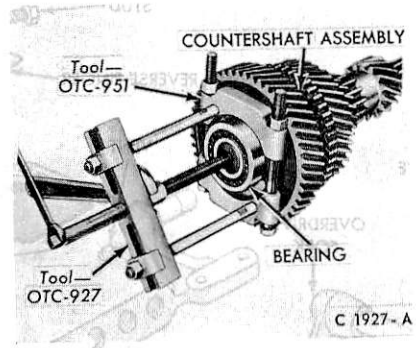

FIG. 22 Removing Countershaft Front Bearing

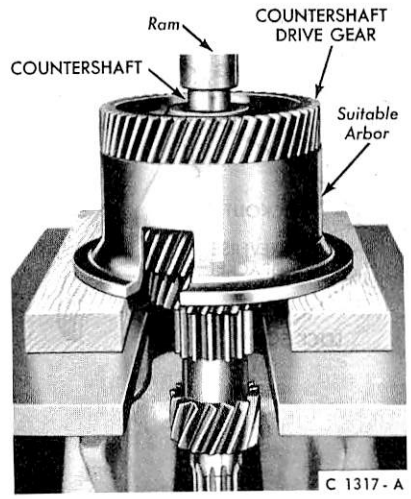

FIG. 23 Removing Countershaft Gear

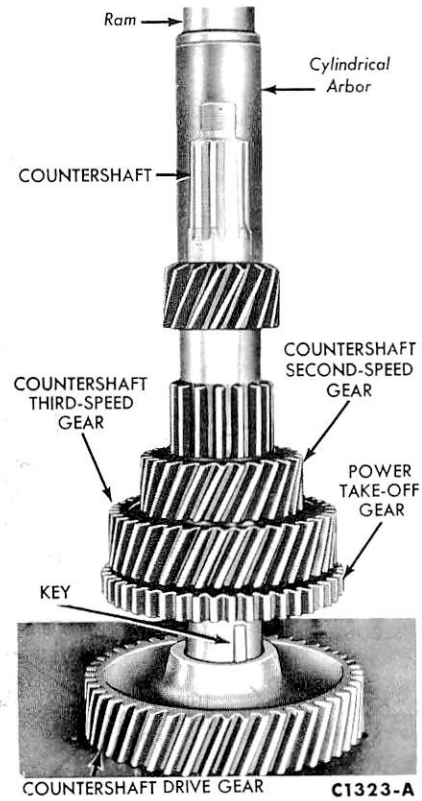

FIG. 24 Countershaft Gear Installation

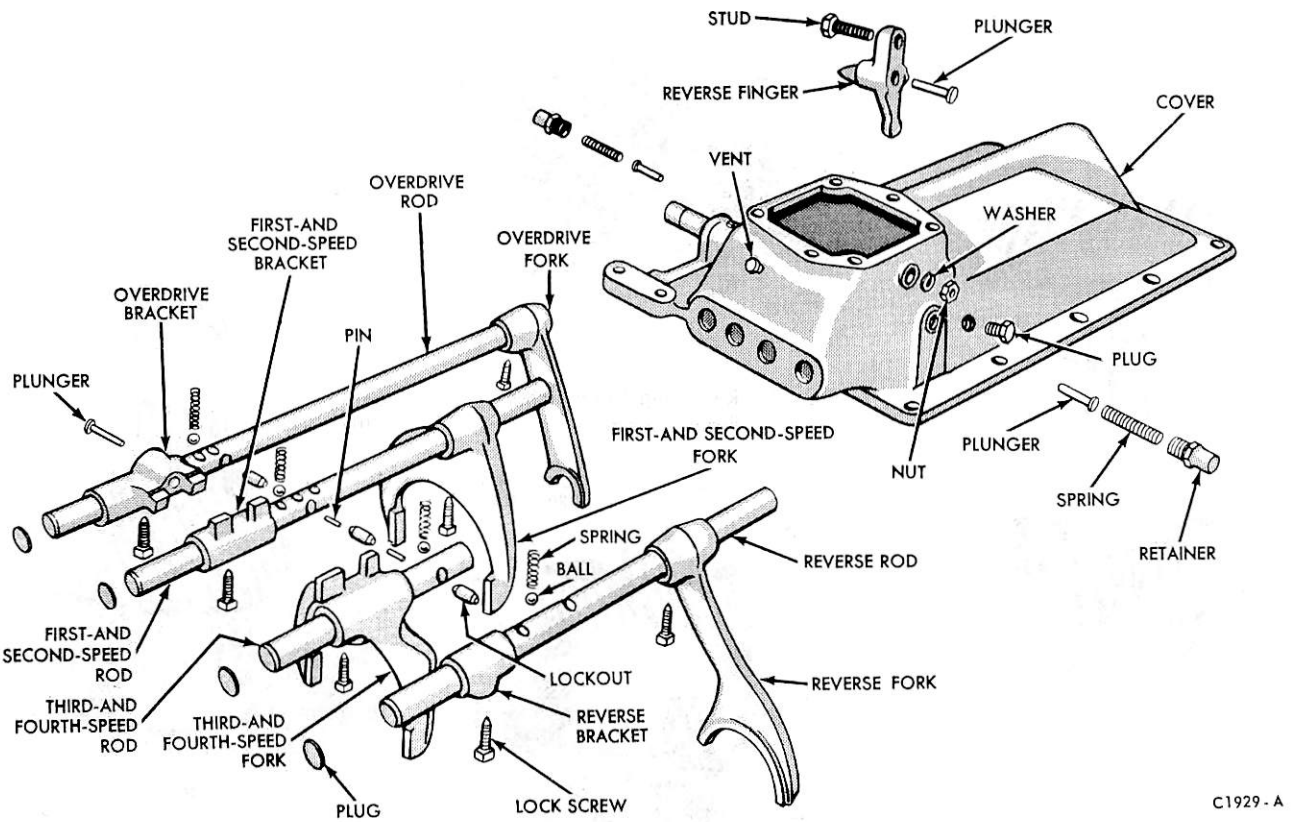

FIG. 25 Shift Cover Assembly

SPECIFICATIONS

APPROXIMATE LUBRICANT REFILL CAPACITY (PINTS)

Transmission	US	IMP
Spicer 8000 (SAE 50 Motor Oil) (ESE M2C39-A)	17	14.25

CC1116-A

TORQUE LIMITS

Transmission – Spicer 8000	Ft-Lbs
Companion Flange Lock Nut	400-450
Countershaft Lock Nut	400-450
Flywheel Housing to Transmission Bolts or Nuts	90-95
(Aluminum Case)	70-75
Input Shaft Bearing Retainer Cap Screws	25-28
Input Shaft Bearing Lock Nut	300-350
Output Shaft Bearing Retainer Cap Screws	90-95
P.T.O. Cover Cap Screws	10-15
Shift Fork to Shaft Cap Screw	45-50

CC1160-A

PART 16-45 Fuller 5H74 Five Speed Transmission

Applies To L-LN-W-WT-9000 Only

COMPONENT INDEX	Page	COMPONENT INDEX	Page
COUNTERSHAFT		REAR MOUNT	
Assembly	45-05	Adjustment	45-01
Disassembly	45-05		
		SPECIFICATIONS	45-08
GEAR SHIFT HOUSING			
Assembly	45-06		
Disassembly	45-05	TRANSMISSION	
		Assembly	45-04
OUTPUT SHAFT		Description	45-01
Assembly	45-05	Disassembly	45-04
Disassembly	45-05	Removal and Installation	45-03

DESCRIPTION

TRANSMISSION

The Model 5H74 transmission is of the constant mesh type, having five speeds forward and one reverse. All of the forward gears are helical type gears (Fig. 1).

The forward speed gears on the mainshaft are in constant mesh with the countershaft gears but float on the mainshaft until locked into engagement with the countershaft gears by means of sliding clutch gears.

ADJUSTMENTS

GEAR SHIFT LINKAGE—W-SERIES

1. Place the gear shift lever in the neutral position.
2. Loosen he bolts on the shift rod turnbuckle (Fig. 2). Then rotate the turnbuckle until the rear of the shift knob is located 12 to 12 1/2 inches from the front face of the instrument panel. Torque the lower turnbuckle bolt.
3. While holding the rear cross-shaft lever in the extreme right position, move the gear shift lever (in neutral) until the outside edge of the shift knob is 2 29/32-3 13/32 inches from the console edge. Torque the upper turnbuckle bolt.
4. Check the operation of the gear shift lever in all positions and readjust if necessary.

REAR MOUNT

ALL EXCEPT W-SERIES

1. With the transmission weight off the mounting studs, torque the upper retaining nuts to specifications, and install the cotter pins (Fig. 3).
2. Loosen the lower retaining nut and the lock nut as necessary so that the transmission rear end hangs freely.
3. Insert a feeler gauge (0.06 inch) between the lower retaining nut and its washer (Fig. 3). **Do not apply pressure to the engine or the transmission. If necessary, back up the lower retaining nut to the stud shoulder.**
4. Turn the lower retaining nut downward until there is slight pressure on the gauge.
5. Repeat steps 2, 3 and 4 for the other side of the support.
6. Torque the lock nuts to specifications.

W-SERIES

1. With the transmission connected at the engine and the transmission jack removed, torque the transmission support-to-transmission case bracket bolts to specifications.
2. Check the clearance between the transmission support and the frame side rail brackets (Fig. 3) and install the necessary washers (shims) to obtain zero clearance. Install the attaching bolts and torque to specifications.

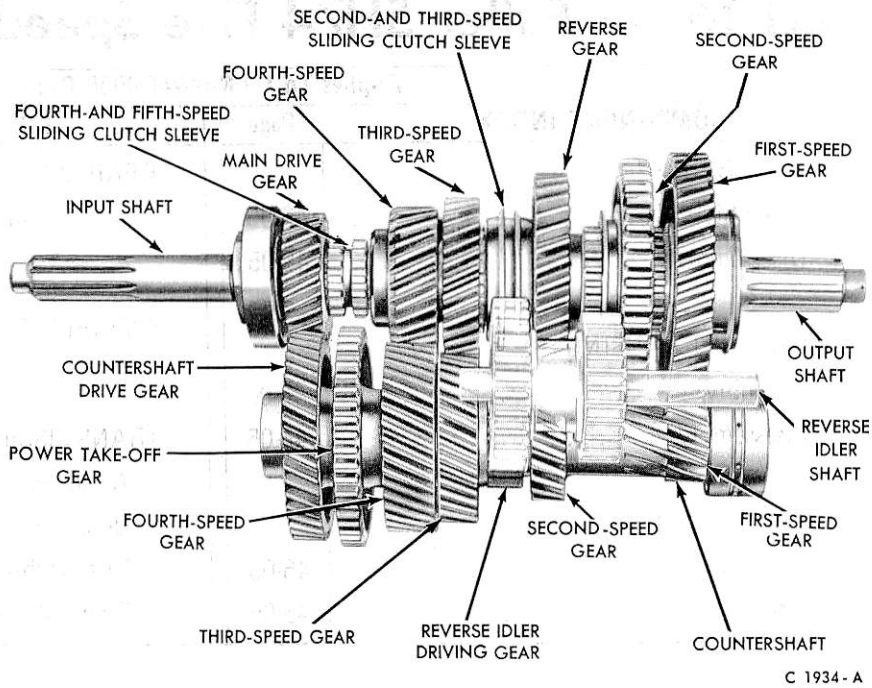

FIG. 1 Gear Train

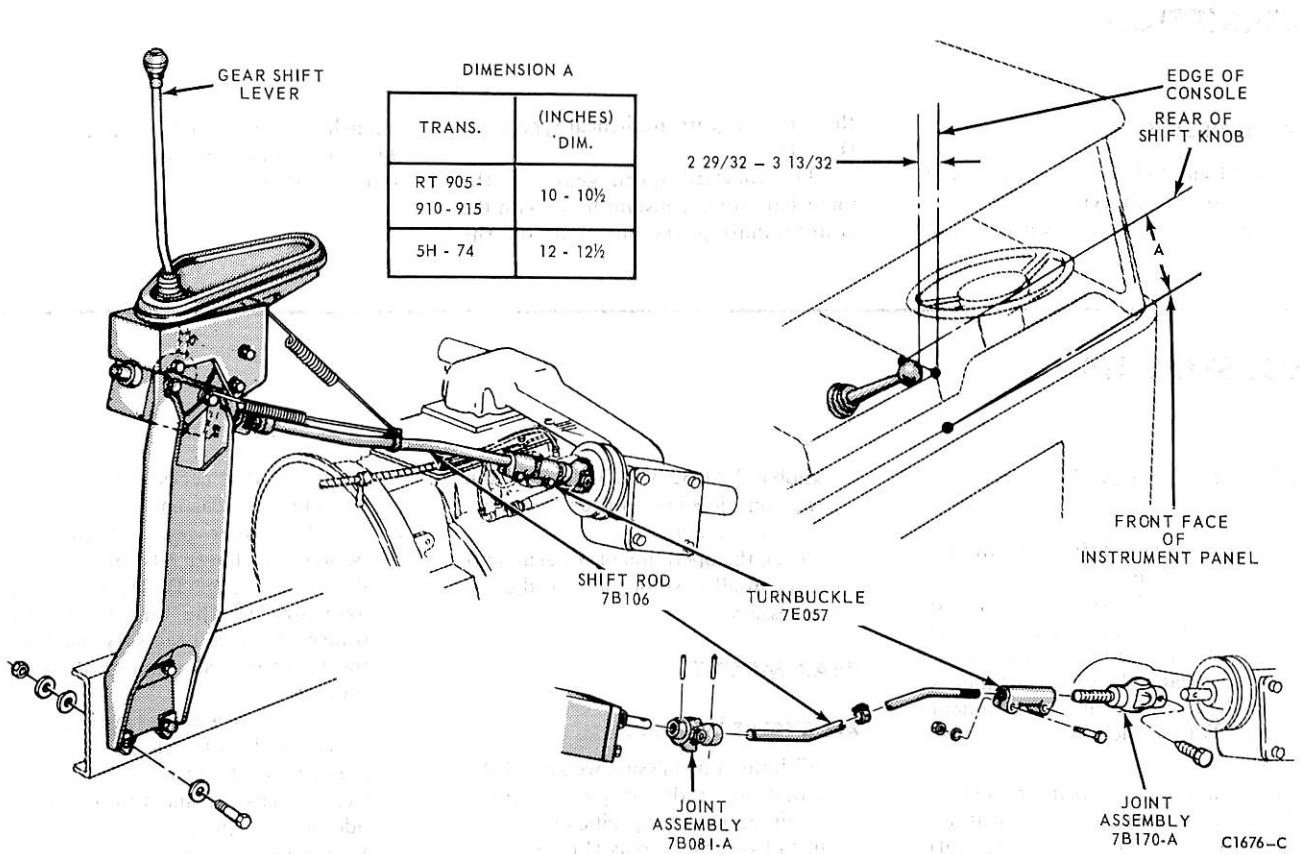

FIG. 2 Gear Shift Linkage Adjustments—W-Series

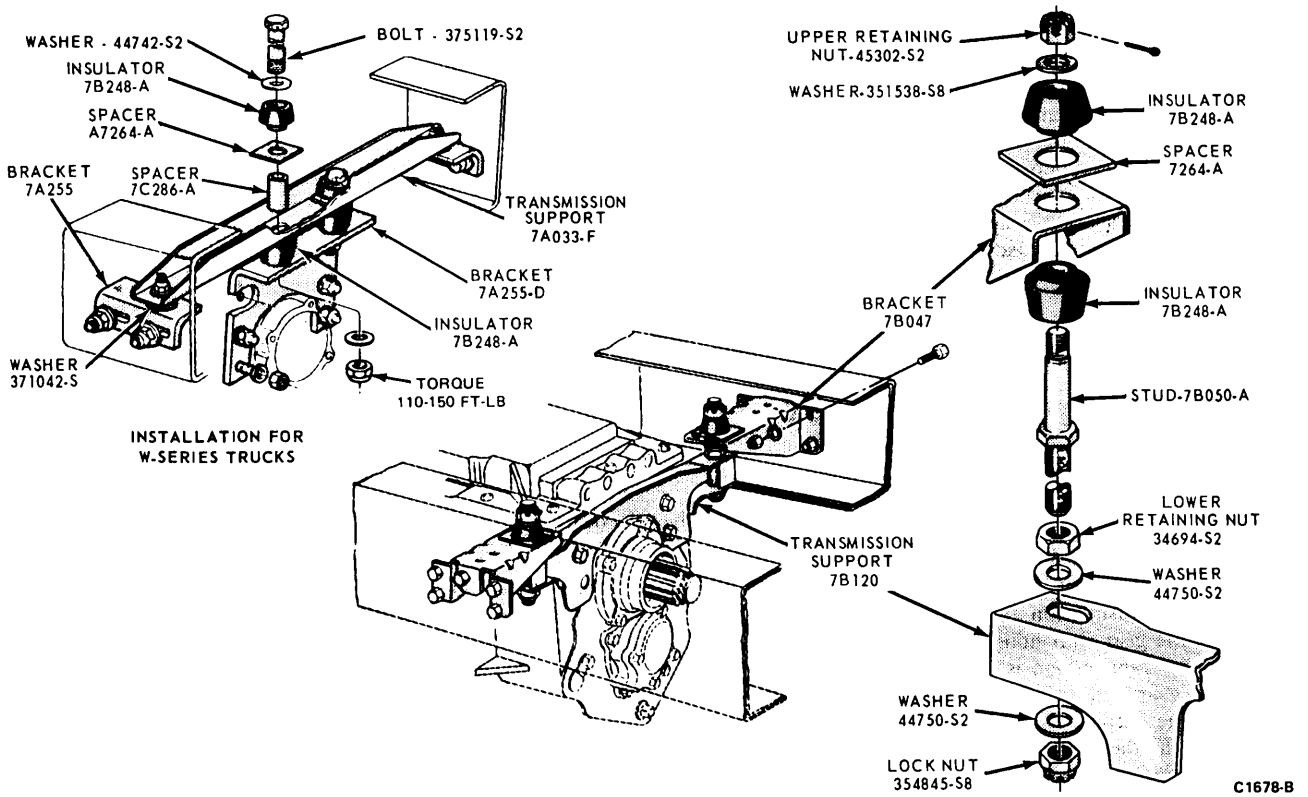

FIG. 3 Transmission Rear Support

REMOVAL AND INSTALLATION

TRANSMISSION

REMOVAL

1. Disconnect the drive shaft.
2. Disconnect the speedometer cable at the transmission.
3. On a W-Series truck, remove the four nuts and washers that secure the transmission support to the transmission (Fig. 3).
4. Disconnect the clutch linkage at the clutch release arm. If the truck is equipped with a slave cylinder, disconnect the slave cylinder mounting bolts and position the slave cylinder out of the way.
5. After cleaning the area around the cross-shaft housing, remove the housing and tie it out of the way. Cover the opening in the gear shift housing to prevent the entry of dirt.
6. Remove the bottom fuel tank support arm for a W-model.
7. Remove all but two of the transmission to flywheel housing attaching bolts. Remove the dust cover from the bottom of the clutch housing.
8. Position a transmission jack and raise the transmission slightly to relieve pressure at the side rail mounting brackets.
9. Remove the bolts that attach the side rail brackets to the side rails, and remove the brackets and transmission support as an assembly.

   On a W-Series truck, remove the bolts and washers that attach the transmission support to the frame side rail brackets. Mark the washers so they can be reinstalled on the same side from which they were removed. After removing the lock wire, remove the transmission support-to-transmission case bracket bolts, washers, insulators, and spacers and remove the support (Fig. 3).
10. After removing the remaining transmission to flywheel housing attaching bolts, pull the transmission rearward to clear the input shaft.
11. Raise the truck to provide clearance in removing the transmission. Install safety stands, and then remove the transmission from under the truck. **On a W-Series truck, the transmission must be lifted out rather than lowered.**

INSTALLATION

1. Place the transmission on a transmission jack (or chain hoist) and position the transmission so that the input shaft splines are aligned with the clutch disc splines. The clutch release bearing must be properly positioned in the release lever fork. Slide the transmission forward until it is in position on the clutch housing.
2. Install the clutch housing attaching bolts and torque them to specifications. Install the clutch housing dust cover.
3. On a W-Series truck, support the

transmission with a transmission jack and remove the hoist chains.

4. Position the transmission rear support and brackets to the transmission and frame side rails. Install the attaching bolts and nuts. Adjust the rear support mounting studs.

On a W-Series truck, install the support-to-transmission case bracket bolts, washers, insulators and spacers. Torque the bolts to specifications and secure them with lock wire. If necessary, adjust the clearance between the transmission support and frame side rail brackets, and install the attaching bolts. Torque the bolts to specifications. Be sure to remove the transmission jack before making rear mount adjustment.

5. Install the fuel tank support arm on a W-model.
6. Connect the clutch linkage to the clutch release arm. If the truck is equipped with a slave cylinder, install the slave cylinder and connect the slave cylinder return spring.
7. Install the cross-shaft housing, and torque the mounting bolts to specifications.
8. Connect the speedometer cable.
9. Connect the drive shaft and lower the truck to the floor.
10. Start the engine and check for leaks.

DISASSEMBLY AND ASSEMBLY

TRANSMISSION

DISASSEMBLY

1. With the transmission in neutral, remove the gear shift housing.
2. While the transmission is draining, lock the gear train in two gears and remove the output shaft flange nut.
3. Remove the flange and brake drum as a unit, and disconnect the parking brake linkage, as necessary, so that the brake shoe assembly can be removed.
4. Remove the brake shoe assembly.
5. Remove the output shaft rear bearing retainer and gasket, and remove the speedometer drive gear. Remove the oil seal from the retainer.
6. After removing the clutch release mechanism, remove the six stud nuts (inside the clutch housing), and then remove the clutch housing.
7. Remove the input shaft bearing retainer and gasket, and then pull out the input shaft and bearing assembly. If necessary, use a soft-drift from inside the case. Remove the bearing retaining snap ring from the case bore.
8. Mount the input shaft assembly in a soft-jawed vise and relieve the bearing nut peening. Remove the nut. **This nut has a left-hand thread.**
9. If the bearing is to be replaced, press or jar it from the shaft.
10. Remove the countershaft rear bearing adapter cap and gasket.
11. Remove the retainer plate from the rear end of the countershaft.
12. Remove the countershaft rear bearing adapter bolts, and then remove the adapter as shown in Fig. 4.
13. Drive the output shaft forward until it stops solidly, and then drive it to the rear until the rear bearing snap ring is exposed.
14. Using tools OTC-938, 924, 930-D, and 952, remove the bearing. If the bearing is to be replaced, remove the snap ring.
15. Remove the output shaft and gears, except the sliding gears. Lift the sliding gears out of the case.
16. Remove the countershaft rear bearing cones, cups, and spacer from the retainer.
17. After removing the reverse idler shaft retainer, remove the shaft, using tool T57T-7140-A. Remove the idler gear and bearings from the case.
18. Move the countershaft rearward to clear the front bearing, and then remove the shaft and gears from the case.
19. Remove the countershaft front bearing retainer, gasket, bearing, and spacer from the case.

ASSEMBLY

1. Install the countershaft front bearing in the case bore.
2. Position the front bearing spacer and gasket, and install the retainer.
3. Position the countershaft assembly in the case, and then tilt the case so that its rear face is up.
4. Position two wood or fiber blocks of equal thickness between the drive gear and the case (Fig. 5).
5. Position the inner bearing outer race in the adapter, and then apply sealer B5A-19554-A to the adapter gasket.
6. Make sure the adapter oil return hole is aligned, and then install the gasket and the adapter.
7. Using the tool shown in Fig. 5 install the inner bearing cone.
8. Position the spacer, and install the outer bearing cone. Position the

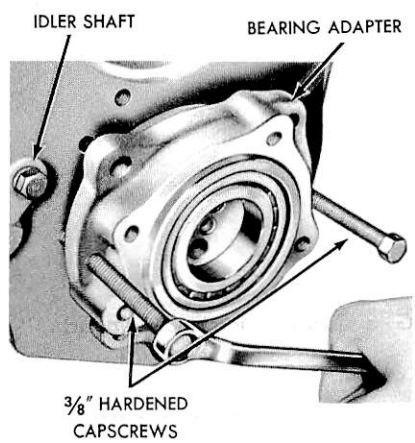

FIG. 4 Removing Countershaft Bearing Adapter

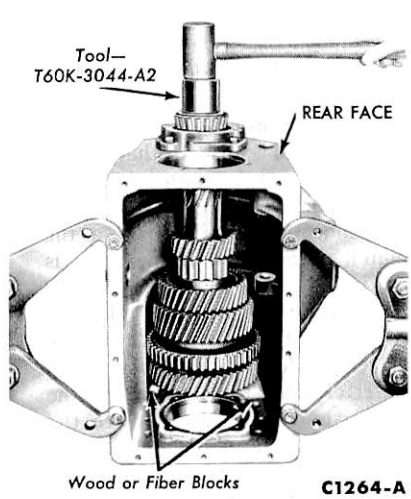

FIG. 5 Installing Countershaft Rear Bearing

outer bearing outer race.
9. Install the bearing lock plate and safety wire the bolts.
10. Apply sealer B5A-19554-A to the adapter cap gasket, and install the gasket and cap.
11. After tilting the case back to its normal position, install the idler gear and shaft. Be sure the flat on the shaft will align with the lock plate.
12. Install the lock plate.
13. Position the output shaft sliding gears in the case (Fig. 6), and then position the output shaft assembly in the case. Check for proper gear engagement (Fig. 1).
14. Install the rear bearing (Fig. 7).
15. If the input shaft bearing was removed, install a new bearing with its shield toward the shaft splines. Install the bearing nut and stake it at the milled slots.
16. Install the input shaft bearing snap ring in the case bore.
17. Position the input shaft assembly, and install the bearing retainer gasket and retainer. Use B5A-19554-A sealer.
18. Install the clutch housing and the speedometer drive gear.
19. After installing a new seal in the rear bearing retainer, install the gasket and retainer. Use B5A-19554-A sealer.
20. Install the parking brake shoe assembly, and connect the brake linkage.
21. With the transmission locked in two gears, install the brake drum and flange. Torque the flange nut to specification.
22. Fill the transmission with lubricant as specified.
23. Adjust the parking brake.
24. Install the gear shift housing, using B5A-19554-A sealer on the gasket.

SUB-ASSEMBLIES

OUTPUT SHAFT

Disassembly

1. Remove the pilot bearing (Fig. 8) and the sliding clutch sleeve.
2. Pry the fourth-speed gear washer key from its keyway between the shaft splines.
3. Align the fourth-speed gear washer with the output shaft grooves (Fig. 9), and then remove the gear and washer.
4. Position the shaft and gears in a press, using the rear face of the third-speed gear (Fig. 6) as a base. Press the shaft no more than 5/8 inch through the third-speed gear and the thrust washer. **Travel of the shaft is limited to 5/8 inch by the small Woodruff key under the bushing. Pressing the shaft further will shear the key and damage the washer.**
5. Move the gear and the washer rearward to their original positions against the shaft shoulder. Then with pry bars, move he bushing forward until the Woodruff key is completely exposed (Fig. 10). Remove the key.
6. Remove the thrust washer, the third-speed gear, the bushing, and the clutch sleeve.
7. Press the output shaft through the third-speed gear bushing, the second-speed gear and the sleeve hub.
8. Remove the two remaining Woodruff keys.

Assembly

1. Install the Woodruff keys for the sleeve hub and the third-speed gear bushing (Fig. 6).
2. Position the second-speed gear (clutching teeth to the front) on the output shaft, and then press the sleeve hub (recessed end to the front) tightly against the gear.
3. Press the third-speed gear bushing onto the shaft and against the sleeve hub. Position the clutch sleeve on its hub.
4. Position the third-speed gear (clutch teeth to the rear) on its bushing.
5. Install the thrust washer, chamfer to the rear, and install the remaining Woodruff key.
6. Press the fourth-speed gear bushing onto the shaft, and position the fourth-speed gear (hub forward) on the bushing.
7. Install the retaining washer, and measure the clearance between the fourth-speed gear and its thrust washer. If the clearance is not 0.006-0.012 inch, select the required retaining washer to result in the specified end play.
8. Install the retaining washer key and the clutch sleeve (recessed end to the rear).
9. Install the pilot bearing.

COUNTERSHAFT

Disassembly

1. After removing the drive gear snap ring (Fig. 11), remove the front bearing inner race as shown in Fig. 12.
2. Press the gears from the shaft, one at a time.
3. Remove the Woodruff keys.

Assembly

1. Install the Woodruff keys, and press on the gears, one at a time (Fig. 11). Press the front bearing inner race on, and install the drive gear snap ring.

GEAR SHIFT HOUSING

Disassembly

1. Remove the detent spring cover and gasket (Fig. 13). Remove the four springs and balls.
2. Remove the set screw and jam nut.
3. Position the housing (right-hand side up) in a vise, and remove the set

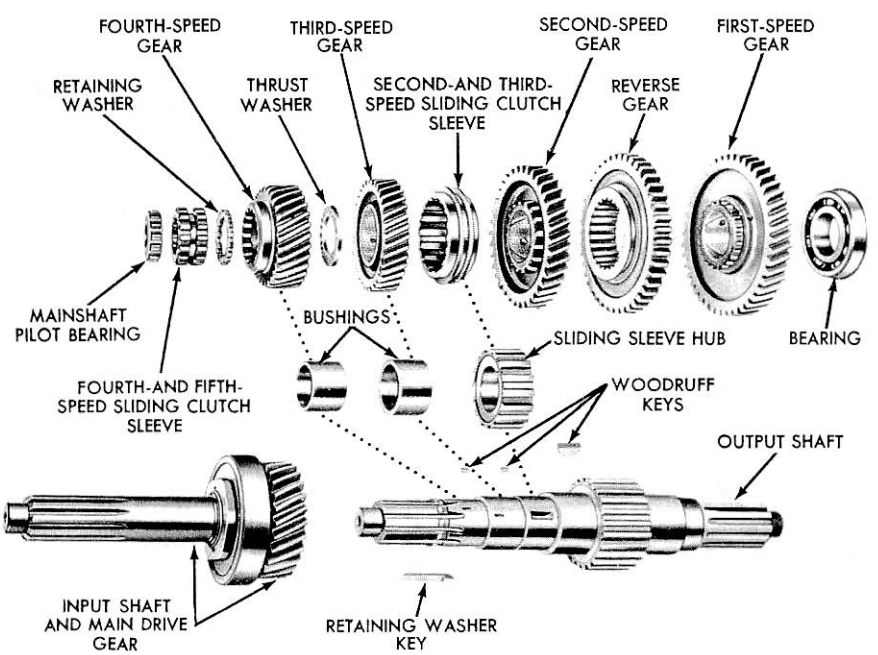

FIG. 6 Input Shaft and Output Shaft

screws from the forks and gates and the block.

4. Remove the Welch plugs.
5. Remove the shift shafts one at a time, beginning with the rocker arm shaft and working down. **Any shaft out of neutral position will lock the remaining shafts in the housing. Do not lose the interlock pin and balls as the low and reverse shaft is removed (Fig. 13).**
6. Remove the pivot pin and rocker arm.

Assembly

1. Position the housing (left-hand side up) in a vise, and install the rocker arm and pivot pin (Fig. 14).
2. Insert the rocker arm shift shaft through the webs and gates (Fig. 15). Install the set screws.
3. Insert the second-third shaft into the housing and through its fork. Install the set screw.
4. Position a 3/4 inch interlock ball in the housing opening between the second-third and the fourth-fifth shafts.
5. Insert the fourth-fifth shaft into the housing and through its fork. **Insert the interlock pin into the shaft as the neutral notch enters the web (Fig. 16). Install the lock screw.**
6. Install the remaining 3/4 inch interlock ball.
7. Insert the low and reverse shaft through the housing, block, and fork. Install the set screws.
8. Safety-wire all set screws and the pivot pin retaining bolts.
9. Install the four 1/2 inch steel balls and the detent spring. **Be sure all shafts are in neutral position so that the balls will fit into their slots.**
10. Install the detent spring cover and a new gasket.
11. Install Welch plugs in the shift shaft openings of the housing.
12. Start the set screw and jam nut, tighten the screw until it bottoms; back it off one half turn, and tighten the jam nut.



FIG. 7 Installing Output Shaft Rear Bearing

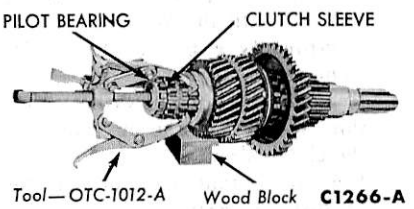

FIG. 8 Removing Output Shaft Pilot

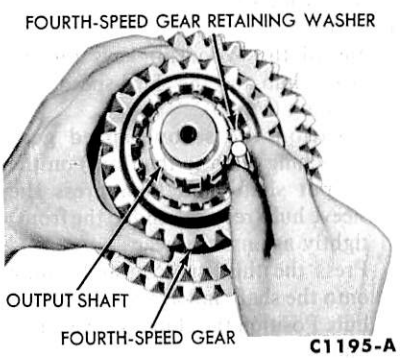

FIG. 9 Removing Fourth-Speed Gear Retaining Washer

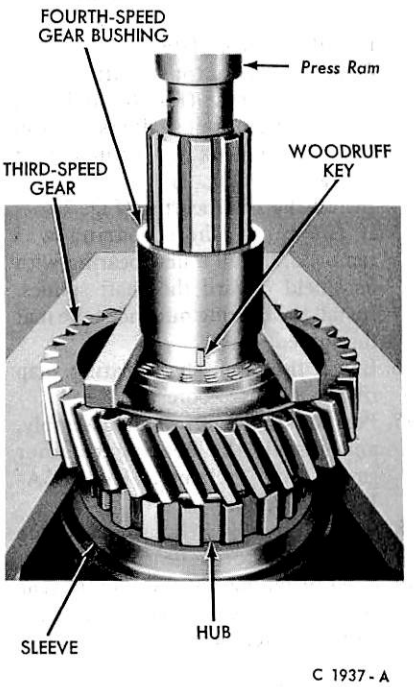

FIG. 10 Removing Fourth-Speed Gear Bushing Key

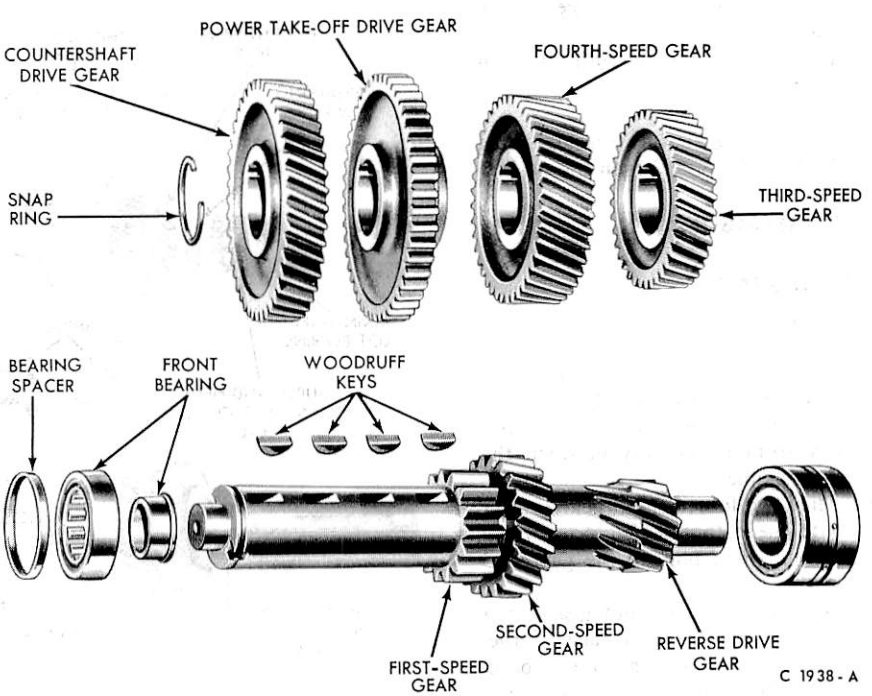

FIG. 11 Countershaft Disassembled

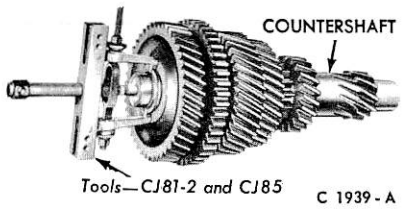

FIG. 12 Removing Countershaft Front Bearing

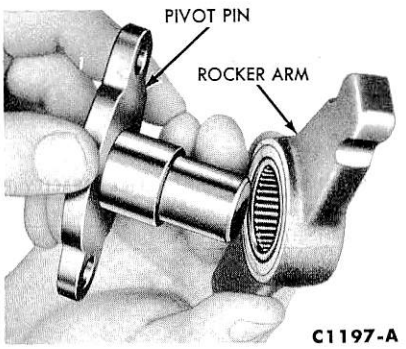

FIG. 14 Installing Rocker Arm and Pivot Pin

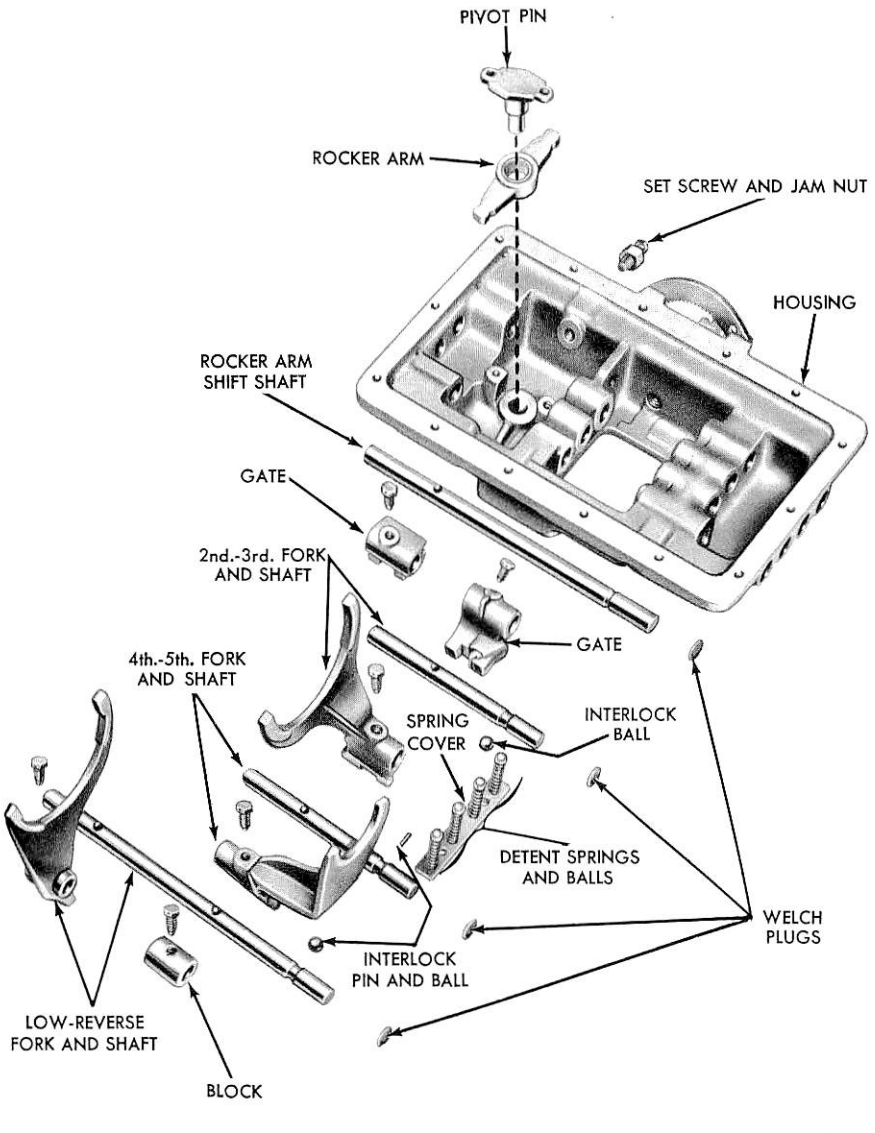

FIG. 13 Gear Shift Housing Disassembled

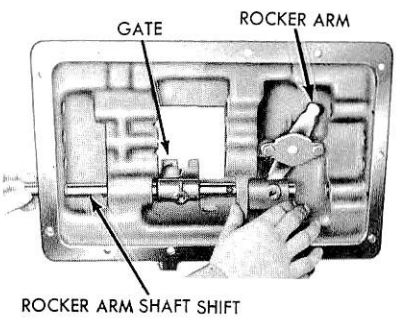

FIG. 15 Installing Rocker Arm Shifter Shaft

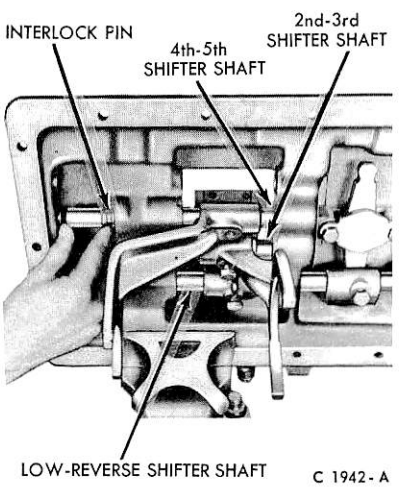

FIG. 16 Installing Fourth and Fifth-Speed Shifter-Shaft

SPECIFICATIONS

APPROXIMATE LUBRICANT REFILL CAPACITY (PINTS)

Transmission	US	IMP
Fuller 5H74 (SAE 50 Engine Oil) (ESE M2C39-A)	22	18.25

CC1113-A

PART 16-46 Fuller T-905 Five-Speed Transmission

Applies To L, LN, LN, LT, LTS, W-9000

COMPONENT INDEX	Page	COMPONENT INDEX	Page
REAR MOUNT ADJUSTMENT	46-02	TRANSMISSION ASSEMBLY - Continued	
SPECIFICATIONS	46-04	Description	46-01
TRANSMISSION ASSEMBLY		Disassembly	46-03
Assembly	46-03	Installation	46-02
		Removal	46-02

DESCRIPTION

TRANSMISSION

The Fuller five-speed, twin countershaft Model T-905 transmission (Fig. 1) has five forward speeds and one reverse speed and is designed for heavy duty vehicles. The twin countershaft design divides the torque equally between the shafts and gears, thus providing a high capacity to weight ratio. The countershafts, identical except for the PTO gears, are short and bearings are of a relative low capacity due to the split torque principle. All gears are constant mesh and have spur type teeth.

The mainshaft gears are not journaled to the mainshaft but are locally axially by washers and held in position by rotation of the countershaft gears, eliminating the need for bushings and sleeves. The mainshaft floats free, receiving only minor radial loads. Mainshaft vertical displacement to conform to clutched gear positions is allowed by rod-like springs which resist float to right or left.

Gears are clutched by internal splines in the hubs of gears. The sliding clutch gears with short conical clutching teeth provide shorter and easier shifts.

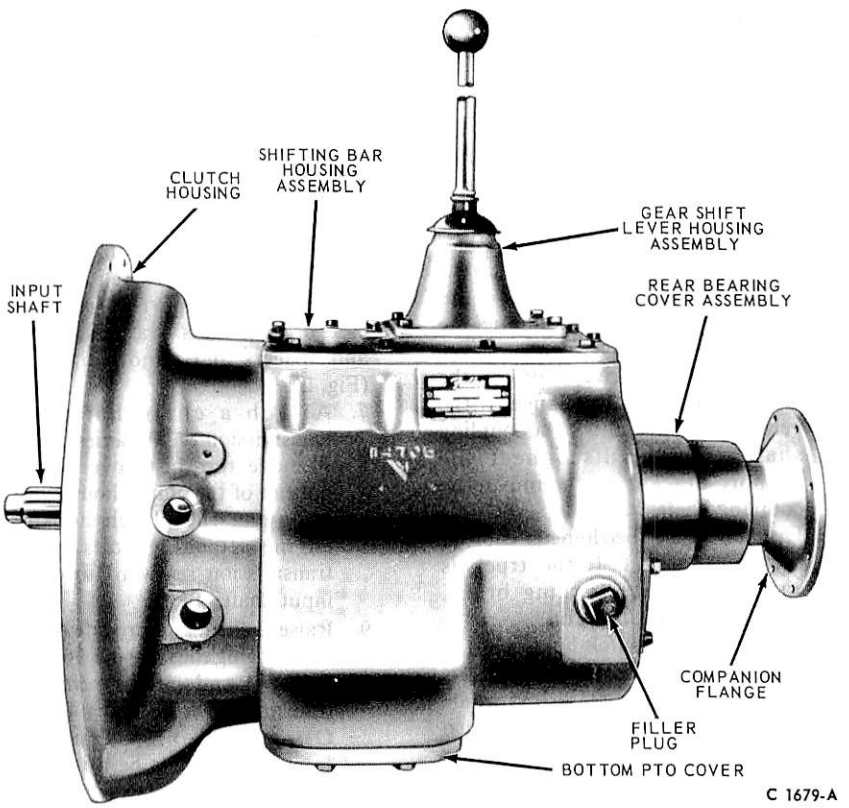

FIG. 1 Five-Speed Twin Countershaft Transmission— Model T-905

ADJUSTMENTS

REAR MOUNT

W-SERIES

1. With the transmission connected at the engine and the transmission jack removed, torque the transmission support-to-transmission case bracket bolts to specifications.
2. Check the clearance between the transmission support and the frame side rail brackets (Fig. 2) and install support-to-transmission case bracket bolts. Torque to specifications.

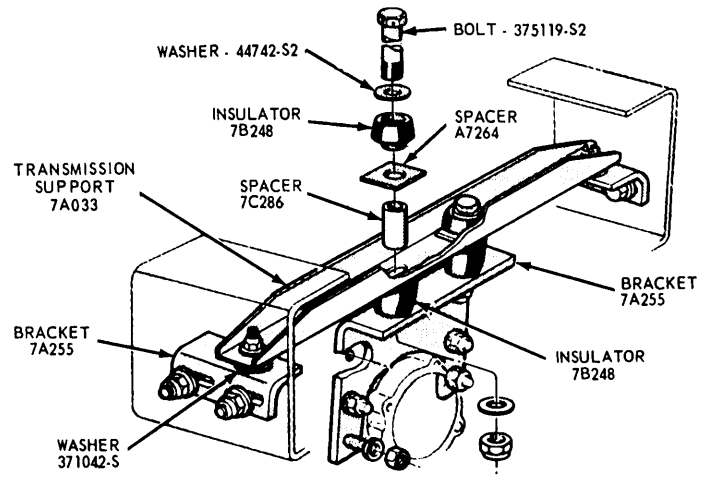

FIG. 2 Transmission Rear Support—W-Series

REMOVAL AND INSTALLATION

TRANSMISSION

Removal

1. Remove the floor mat and the floor plate. Remove the gear shift lever.

On a W-Series truck, remove the cross-shaft housing bolts and tie the housing out of the way.

2. Disconnect the drive shaft (or the coupling shaft) at the flange. If the vehicle is equipped with a coupling shaft support, disconnect the support bracket and remove the coupling shaft.
3. Disconnect the speedometer cable at the transmission. If the truck is equipped with a parking brake, remove the adjusting rod.
4. Disconnect the clutch linkage at the clutch release arm. If the truck is equipped with a slave cylinder, disconnect the slave cylinder return spring. Remove the slave cylinder mounting bolts and position the slave cylinder out of the way.
5. Position a jack under the transmission. Raise the transmission slightly to relieve pressure at the side rail mounting brackets.
6. Remove the side rail bracket stud nuts, insulators and reinforcements. Then remove each side rail bracket. On W-Series trucks, remove the bolts and washers that attach the transmission support to the frame side rail brackets. Mark the washers so they can be reinstalled on the same side from which they were removed. After removing the lock wire, remove the transmission support-to-transmission case bracket bolts, washers, insulators and spacers and remove the support (Fig. 2).
7. Attach a chain hoist to the transmission on W-Series trucks.
8. Remove the dust cover from the bottom of the clutch housing. After removing the clutch housing to engine attaching bolts, pull the transmission rearward to clear the input shaft.
9. Raise the truck to provide clearance in removing the transmission. Install safety stands, then remove the transmission from under the truck. **On a W-Series truck, the transmission must be lifted out.**

Installation

1. Place the transmission on a transmission jack (or chain hoist) and position the transmission so that the input shaft splines are aligned with the clutch disc splines. The clutch release bearing must be properly positioned in the release lever fork. Slide the transmission forward until it is in position on the clutch housing.
2. Install the clutch housing attaching bolts and torque them to specifications. Install the clutch housing dust cover.
3. On a W-Series truck, support the transmission with a transmission jack and remove the hoist chains.
4. Install the side rail brackets and torque the mounting bolts to specifications. Position the rear support studs, insulators, washers and nuts to the side rail brackets and transmission support. Adjust the studs.

On W-Series trucks, install the support-to-transmission case bracket bolts, washers, insulators and spacers. Torque the bolts to specifications and secure them with lock wire. If necessary, adjust the clearance between the transmission support and frame side rail brackets and install the attaching bolts. Torque the bolts to specifications. Be sure to remove the transmission jack before making rear mount adjustments.

5. Connect the clutch linkage to the clutch release arm. Install the slave cylinder and connect the slave cylinder return spring (if so equipped).
6. Connect the speedometer cable. If

the truck is equipped with a parking brake, connect the adjusng rod.
7. Install the coupling shaft in the support bracket and connect the support bracket to the support plate. Connect the coupling shaft (or the drive shaft) at the transmission.
8. Install the shift lever housing. **When positioning the gear shift lever housing, always lower it straight down onto the gear shift housing.**
9. Lower the truck to the floor and install the floor plate and the floor mat.

DISASSEMBLY AND ASSEMBLY

TRANSMISSION

Disassembly

1. Remove the bolts that attach the shifting bar housing to the transmission case. Tap the housing with a soft hammer to free it from the case, then lift it from the transmission.
2. Lock the mainshaft by engaging two gears at one time with the sliding clutches.
3. Remove the companion flange attaching nut, then remove the flange. Remove the rear bearing cover attaching screws. Pry the cover from the output shaft and case as shown in Fig. 3.
4. Remove the speedometer drive gear or spacer and the bearing washer from the output shaft or from the cover.
5. Remove the rear bearing from the output shaft (Fig. 4). If the bearing remains in the rear cover, remove it from the cover.
6. Remove the lock wire and the two flat key attaching bolts (Fig. 5). Lift the two keys from the output shaft.
7. Remove the output shaft as shown in Fig. 6.
8. Remove the clutch release mechanism from the flywheel housing.
9. Remove the four bolts, six nuts and lock washers that attach the flywheel housing to the transmission case.

The disassembly and assembly of the basic T-905 transmission is the same as the RT-910 and RT-915 transmission after all exterior components have been removed from them. The exceptions are that the right countershaft bearing on the T-905 must be removed before the mainshaft can be lifted from the case. Also the T-905 has 2 keys in the mainshaft.

Assembly

Refer to Part 16-61 for the assembly of the basic transmission, then:

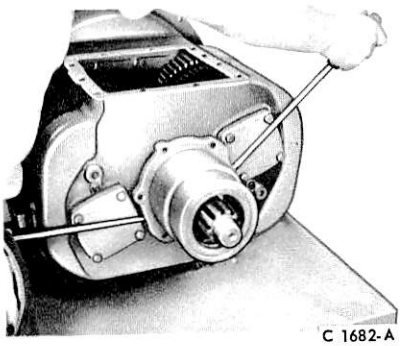

FIG. 3 Removing Rear Bearing Cover

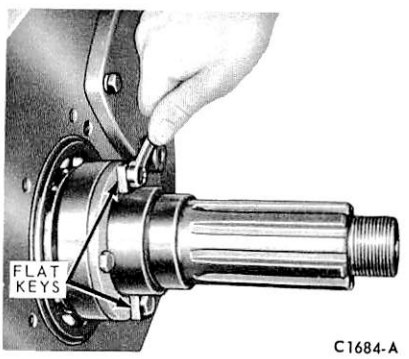

FIG. 5 Removing Output Shaft Attaching Screws

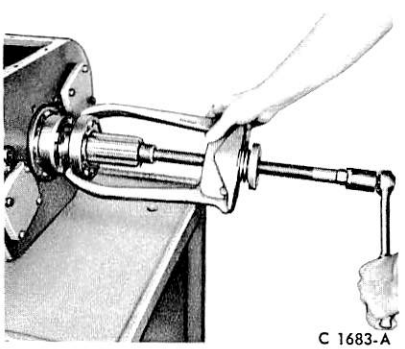

FIG. 4 Removing Rear Bearing From Output Shaft

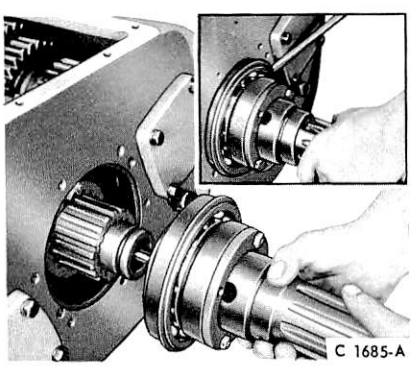

FIG. 6 Removing Output Shaft from Mainshaft and Case

1. Place a new flywheel housing gasket on the front of the transmission case.
2. Place the flywheel housing on the six studs. Install the six nuts, bolts and lock washers. Tighten the nuts and bolts to specifications.
3. Install the clutch release mechanism in the flywheel housing.
4. Position the output shaft on the coupling gear and install the two flat keys and attaching bolts. Torque the bolts to specification and secure them with lock wire.
5. Install the rear bearing on the output shaft.
6. Position the bearing washer and the speedometer drive gear or spacer on the output shaft.
7. Position a new bearing cover gasket on the transmission case. Position the bearing cover on the case and install the attaching bolts. Torque the bolts to specification.

SPECIFICATIONS

APPROXIMATE LUBRICANT REFILL CAPACITY (PINTS)

Transmission	US	IMP
Fuller T-905 (SAE 50 Engine Oil) (ESE M2C39-A)	22	18.25

CC1115-A

PART 16-60 Fuller RT-610 Ten-Speed Transmission

Applies To LN-6000; C, LN-7000; C, L, LN, LNT, LT, LTS-800 and C, CT, L, LN, LNT, LT, LTS-900

COMPONENT INDEX	Page
AIR REGULATOR AND FILTER	
Assembly	60-04
Disassembly	60-04
Installation	60-02
Removal	60-02
AIR VALVE	
Assembly	60-04
Disassembly	60-04
Installation	60-02
Removal	60-02
AUXILIARY SECTION	
Assembly	60-08
Disassembly	60-07
FRONT SECTION	
Assembly	60-05
Disassembly	60-04
GEAR SHIFT LEVER HOUSING	
Assembly	60-04
Disassembly	60-04
GEAR SHIFT LEVER HOUSING - Continued	
Installation	60-01
Removal	60-01
RANGE SHIFT CONTROL VALVE	
Assembly	60-04
Disassembly	60-04
Installation	60-02
Removal	60-02
SHIFTING BAR HOUSING	
Assembly	60-06
Disassembly	60-06
SPECIFICATIONS	60-13
TRANSMISSION ASSEMBLY	
Description	60-01
Installation	60-03
Removal	60-03

DESCRIPTION

TRANSMISSION

The RT-610 transmission features the twin countershaft principle of operation and is designed for medium-duty vehicles with engines in the 600 ft-lb maximum torque range.

Engine torque is split between the two countershafts, thus reducing tooth pressures on mainshaft and countershaft gears. This enables a reduction in gear, shaft and bearing size while maintaining a high capacity level.

Floating mainshaft gears are held in radial position by rotation of countershaft gears. Axial position is maintained by washers. This provides equal tooth loading on mainshaft gears and eliminates the need for sleeves and bushings.

Gears are clutched to the mainshaft by short sliding clutch gears on the mainshaft which engage internal splines in gear hubs. Sliding clutch gears, with conical clutching teeth, provide short and easy shifts.

Ten speeds are obtained by a five speed main section and a two speed range section. The five gear ratios in the main section are used once through reduction in low range and again in high (direct) range.

All ten speeds are controlled by one gear shift lever and a range control button. Range shifts are automatic after pre-selection.

REMOVAL AND INSTALLATION

GEAR SHIFT LEVER HOUSING

Removal

Remove the attaching capscrews and lift the gear shift lever housing or remote control housing from the shift bar housing (Fig. 1).

Installation

1. Make sure the shifting notches on bars in the shifting bar housing are aligned in the neutral position.
2. Install the gear shift lever housing on shifting bar housing, fitting lower end of lever into notches in shifting block and yokes (Fig. 1).
3. Install attaching capscrews, except capscrew at left-rear corner as this is used to secure air line.



FIG. 1 Removing Gear Shift Lever Housing

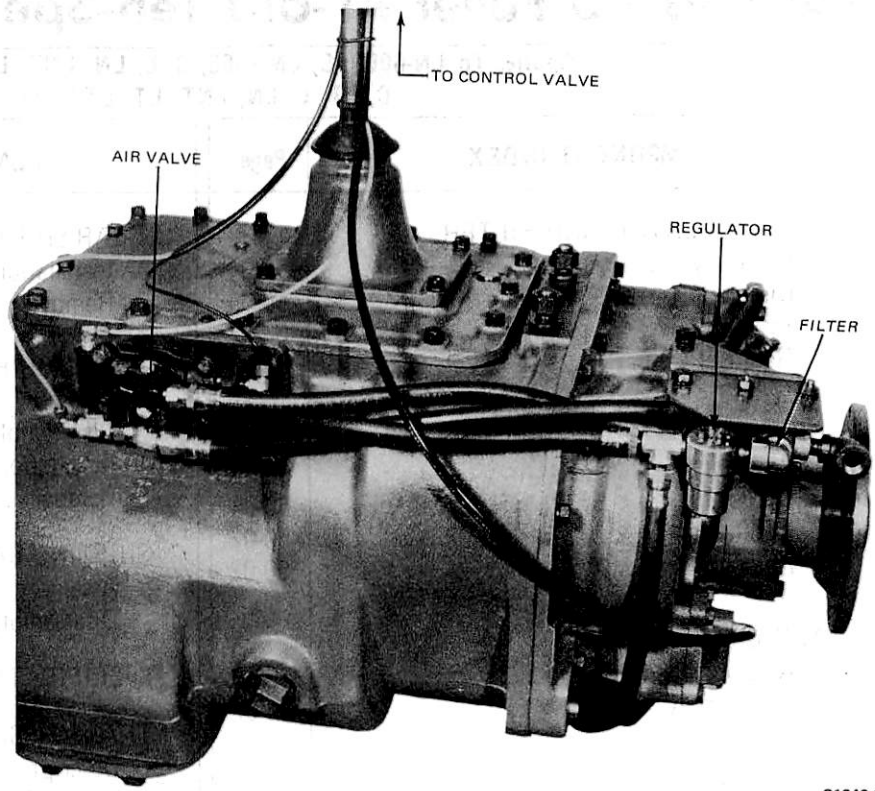

FIG. 2 Transmission Air System

AIR SHIFT CONTROLS

AIR VALVE

Removal

1. Remove the floor mat and the floor plate.
2. Place the gear shift lever in the neutral position. Drain the air from the system.
3. Disconnect the air line leading from the regulator to the tee fitting on the air valve (Fig. 2).
4. Disconnect the two air cylinder lines from the air valve.
5. Disconnect the two nylon air lines from the air valve.
6. Remove the air valve attaching bolts and remove the valve, gasket and the alignment sleeve.
7. Thoroughly clean the valve in cleaning solvent and dry it with compressed air.

Installation

1. Place the gear shift lever in the neutral position. The lever must remain in this position until air pressure has been admitted to the system.
2. Apply air pressure to the front port of the air valve to move the pistons to the rear. Failure to comply with these two steps may result in damage to the valve.
3. Position the alignment sleeve in the valve body.
4. Place a new gasket on the body.
5. Secure the body to the transmission with the attaching screws and lock washers. Tighten the screws to specification.
6. Connect all air lines to the valve as shown in Fig. 2.

RANGE SHIFT CONTROL VALVE

Removal

1. Drain the air from the system.
2. Disconnect the two nylon lines from the fittings.
3. Loosen the attaching clamp and remove the range shift control valve from the gear shift lever.

Installation

1. Secure the control valve to the gear shift lever with the attaching clamp. Make sure that the control valve button is six inches below the top surface of the gear shift knob when the button is pulled out. Tighten the clamp.
2. Connect the white nylon air line to the inlet port (right side) of the master control valve.
3. Connect the black nylon air line to the outlet port (left side).

AIR REGULATOR AND FILTER

Removal

1. Disconnect and remove the air line, including clamp, between the air valve and air regulator.
2. Remove street ell and reducer from regulator if necessary.
3. Remove capscrews and remove the air regulator and filter assembly from transmission.
4. Place in vise and turn the large hexagonal nut from threads of air regulator.
5. Remove the air regulator from nipple.
6. Remove the two capscrews and remove bracket from filter. The air filter contains a replaceable filter element which can be removed by turning out the bolt at top of filter and disengaging the body from cover.

Installation

1. Install nipple in output port of air filter.
2. Place the hexagonal nut and washer over nipple.
3. Place bracket over nipple and attach bracket to top of filter but do not tighten capscrews.
4. Replace the regulator on nipple.
5. Tighten the hexagonal nut on regulator to secure regulator to bracket, exhaust port away from transmission.
6. Tighten the two capscrews which attach the bracket to filter.
7. If previously removed, install bushing and 90 degree street ell in output port of air regulator. Street ell faces toward the gear shift lever housing when assembly is installed.
8. Install the air regulator and filter assembly on mounting surface on left side of transmission, tighten

capscrews securely.

9. Install air line between output port of air regulator and the tee in supply port of air valve. Fasten hose with clamp at left-rear capscrews location on gear shift lever housing.

TRANSMISSION

Removal

1. Bleed the air reservoir and disconnect the air line at the rear of the transmission.
2. Disconnect the drive shaft at the transmission companion flange.
3. Disconnect the speedometer cable at the transmission.
4. After cleaning the area around the cross-shaft housing, remove the housing and tie it out of the way. Cover the opening in the gear shift housing to prevent the entry of dirt.
5. Remove the shift control cable, speedometer cable and fuel line retaining clamps.
6. Disconnect the nylon cables at the air valve and shift cylinder.
7. Disconnect the clutch linkage at the clutch release arm.
8. Remove all but two of the clutch housing attaching bolts at the engine. Remove the dust cover from the bottom of the clutch housing.
9. Position a jack under the transmission. Raise the transmission slightly to relieve pressure at the side rail mounting brackets.
10. Remove the bolts that attach the transmission support to the frame side rail brackets. After removing the lock wire, remove the transmission support-to-transmission case bolts, washers, insulators and spacers. Remove the support.
11. After removing the remaining clutch housing attaching bolts, pull the transmission rearward to clear the input shaft.
12. Raise the truck to provide clearance in removing the transmission. Install safety stands, then remove the transmission from under the truck.

Installation

1. Place the transmission on a transmission jack (or chain hoist) and position the transmission input shaft in the clutch discs. As the input shaft enters the clutch, rotate the clutch release yoke so that the release yoke fingers contact the release bearing in their proper position. Be sure to position the clutch release bearing with the flat section on top.

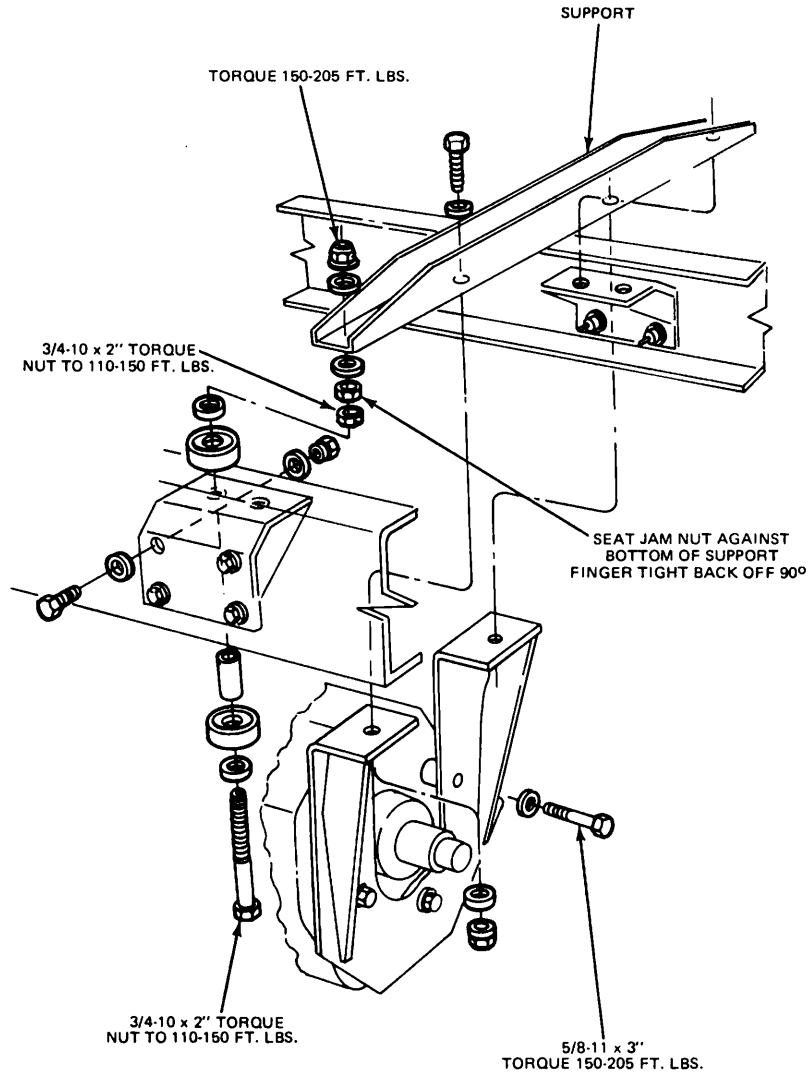

FIG. 3 Transmission Rear Support

2. Install the clutch housing attaching bolts and torque them to specification. Install the clutch housing dust cover. If this removal and installation involves the replacement of the pilot bearing also, the bearing must be pressed to approximately 1/16 inch beyond the flush position.
3. With proper support, position the transmission assembly for installation.
4. Position the support. Replace the spacers, insulators, washers and support-to-transmission case bolts. Secure with lock wire. Replace the support-to-frame side rail brackets bolts. (The transmission should be raised slightly to relieve pressure at the side rail mounting brackets).
5. Replace the dust cover at the bottom of the clutch housing. Replace the clutch housing attaching bolts. Torque to specifications.
6. Connect the nylon cables to the air valve and shift cylinder. Connect the speedometer cable and install the retaining clamps.
7. Install the shift control cable and fuel line retaining clamps.
8. Install the cross-shaft housing and torque the mounting bolts to specifications.
9. Connect the drive shaft and torque the bolts to specifications.
10. Lower the truck to the floor. Start the engine to build up air pressure and check for leaks.

DISASSEMBLY AND ASSEMBLY

GEAR SHIFT LEVER HOUSING

Disassembly

1. Remove the rubber dust protector from gear shift lever.
2. Mount the assembly in a vise with the large opening up.
3. Free the gear shift lever tension spring by twisting a heavy screwdriver between the spring and housing, forcing the spring from its seat under lugs cast in housing.
4. Remove the tension spring from housing.
5. Withdraw the tension spring washer and gear shift lever out through bottom of housing.
6. Remove the nut and lock washer from the gear shift lever pivot pin.
7. Remove pivot pin by forcing it inward and through wall of housing.

Assembly

1. Install the pivot pin in bore in housing, thread end outward.
2. Install the lock washer and nut on pivot pin.
3. Mount the housing in a soft-jawed vise with the large, bottom opening upwards.
4. Insert the gear shift lever in housing, fitting slot in pivot ball of shift lever on pivot pin.
5. Install the tension spring washer in housing.
6. Install the tension spring in housing, seating spring under lugs cast inside the housing.
7. Remove from vise and install the rubber dust protector over the gear shift lever and against neck of housing. (Do not install ball grip on lever until after the range control valve has been installed.)

AIR SHIFT CONTROLS

AIR VALVE

Disassembly

1. Remove all air line fittings and the vent from the valve.
2. Remove the two screws securing the side cap to the valve body and remove the cap (Fig. 4).
3. Remove the valve insert and spring from the piston. Remove the O-ring from the valve insert.
4. Remove the end cap and piston from the valve body. Remove the two O-rings from the piston.
5. Remove the nylon plug from the piston and remove the O-ring from the plug.

Assembly

1. Use all new O-rings and lubricate them with a thin film of vaseline before installing them.
2. Install O-rings on the piston and nylon plug. Install the plug in the piston (Fig. 4).
3. Insert the piston in the valve body and install the end cap. Tighten the cap securely.
4. Install the spring into the piston.
5. Install an O-ring on the valve insert and install it in the piston.
6. Secure the side cap to the valve body with the attaching screws and lock washers. Tighten the screws securely.
7. Coat the fittings with sealer and install them in their respective ports. Install the vent in the body.

RANGE SHIFT CONTROL VALVE

Disassembly

1. Place the control valve with the rear housing (outlet side) on a bench. Remove the front and rear housing attaching bolts.
2. Remove the control button and plunger assembly (Fig. 5).
3. Remove the detent balls, springs and felt seals from the valve housings.
4. Remove the valve plate and O-ring from the rear housing.
5. Lift the valve insert from the front housing and remove the O-ring.
6. Remove the wave washer installed under the valve insert.
7. If necessary, drive the roll pin from the button with a punch, then remove the control button from the plunger.

Assembly

1. Insert the wave washer in the front housing bore (Fig. 5).
2. Install a new O-ring on the valve insert and install the insert into the front housing.
3. Position a new O-ring into the rear housing bore and install the valve plate.
4. Install a felt seal into the top of each housing.
5. If the control button was removed, secure it to the plunger with the roll pin.
6. Position the detent balls and springs into the housings and install the control button and plunger assembly. Install the housing attaching screws.

AIR REGULATOR AND FILTER

Disassembly

1. With regulator in a vise with the **in surface and end cap between jaws of vise, turn lock ring from regulator body.**
2. Slowly open vise and remove loose parts, consisting of spring plate, spring, shims and spring retainer (Fig. 6).
3. Remove diaphragm from body.
4. Remove snap ring, washer and piston spring from piston.
5. Push piston out through air port.
6. Remove seal from bore in body.

Assembly

1. Replace seal in bore in body.
2. Replace piston, applying Lubriplate (Fig. 6).
3. Replace piston spring, washer and snap ring on piston.
4. Replace diaphragm in body.
5. Replace the spring retainer, shims, spring and spring plate.
6. Replace the lock ring on the regulator body.

MAIN TRANSMISSION

Disassembly

Refer to Auxiliary Section for instructions on separating the main and auxiliary sections of the transmission.

1. Remove right countershaft snap ring from rear bearing bore of case (Fig. 7). Using soft bar and maul against rear of countershaft, move the assembly forward as far as possible until snap ring groove in front of bearing is exposed. If front bearing snap ring groove can not be exposed (due to variances in thickness of case), use punch between hub of countershaft drive gear and inner race of bearing to move the gear forward on shaft.
2. Install snap ring in the exposed bearing snap ring groove. (Use snap ring which was removed from rear bearing bore.) Loosen the capscrews at the bearing retaining rings on auxiliary drive gear. This will allow movement to he rear of the countershaft and mainshaft assemblies.
3. Using soft bar and maul against front of countershaft, move the countershaft assembly to the rear as far as possible. This will move front bearing forward on shaft. Using soft bar and maul against rear of countershaft, again move the

countershaft as far forward as possible to unseat front bearing from case bore. Use puller or pry bars to remove front bearing.
4. Use curved soft bar and maul from inside case to move the rear countershaft bearing to the rear far enough to expose snap ring groove in rear bearing. Install snap ring in groove in rear bearing (same snap ring as used on front bearing), and use pullers or pry bars to remove countershaft rear bearing.
5. Move the drive gear and shaft forward as far as possible.
6. Remove the bearing retaining snap ring from groove in shaft.
7. Hold shaft in position and tap the drive gear forward to unseat bearing from case.
8. Use pullers or pry bars to complete removal of bearing.
9. Remove the drive gear washer.
10. Remove the snap ring from groove in ID of drive gear.
11. Pull shaft forward and from splines of drive gear.
12. If necessary, remove bushing from pocket in clutch shaft.
13. Move the drive gear to the rear and against the 4th speed gear, engaging teeth of sliding clutch gear.
14. Remove capscrews and remove the two bearing retainer rings from case.
15. Remove the coupling snap ring from the groove in mainshaft (located in bore of auxiliary drive gear).
16. Tap against front of mainshaft to move the auxiliary drive gear bearing to the rear, exposing the bearing snap ring.
17. Use pry bars to remove the auxiliary drive gear assembly from case bore and from splines of mainshaft.
18. Remove snap ring from groove in auxiliary drive gear.
19. Press or use driver to remove bearing from auxiliary drive gear.
20. Use curved pry bar to walk bearing from idler bore in case.
21. Remove the rear idler washer and holder from bore. (If necessary, bend holder lugs and remove washer from holder.)
22. Remove reverse idler gear from case.
23. Remove the idler bearing from reverse idler gear.
24. Remove the front idler washer from case.
25. Block the right countershaft to the right as far as possible and lift the mainshaft assembly from case.
26. Remove the drive gear and the 4th-5th sliding clutch from mainshaft.
27. Inside hub of the 4th speed gear, remove snap ring from groove in mainshaft (Fig. 8).
28. Remove the 4th speed gear and washer.
29. Remove the 3rd speed gear and washer.
30. Remove the 2nd-3rd speed sliding clutch.
31. Remove the long key from slot in mainshaft.
32. Remove the 2nd speed gear and washer.
33. Remove the 1st speed gear and washer.
34. Remove the 1st-reverse sliding clutch.
35. Remove the reverse gear and washer.
36. Lift the right countershaft from case.
37. Remove bearings from the left countershaft in the same manner in which bearings were removed from right countershaft.
38. Lift the left countershaft from case.

Both countershafts are disassembled in the same manner as construction is identical.

39. Remove snap ring from front of countershaft (Fig. 9).
40. Press the drive gear from shaft.
41. Press the 4th speed gear from shaft.
42. Using the rear face of the **PTO** gear as a base in press, press the 3rd speed gear, and the **PTO** -2nd speed gear cluster from shaft. If necessary, remove Woodruff key, long key and roll pin from shaft.
43. Use curved pry bar to walk right reverse idler gear bearing from idler bore in case.
44. Remove the rear idler washer and holder from bore. If necessary, bend holder lugs and remove washer from holder.
45. Remove the reverse idler gear from case.
46. Remove the idler bearing from reverse idler gear.
47. Remove the front idler washer from case.

Assembly

1. Install the small, flat right reverse-idler gear front washer on pin in lower right of case.
2. Set reverse gear in position next to washer, long hub to the rear.
3. Install needle bearing through rear bore and into hub of reverse gear.
4. Place rear washer in holder if previously removed, oil slot down, and bend lugs to secure washer.
5. Place washer and holder into reverse gear case bore, oil slots toward gear, holder flange to the rear.
6. Install the auxiliary countershaft front bearing into the reverse gear case bore to hold the reverse idler gear assembly in position.

The front portion of the auxiliary countershaft is used as a journal for the reverse idler gear.

Countershafts are identical and are assembled in the same manner.

7. If previously removed, install roll pin, long key and Woodruff key in slots in countershaft (Fig. 10).
8. Press the **PTO** -2nd speed gear cluster on countershaft, **PTO** gear to the front.
9. Press the 3rd speed gear on shaft, long hub to the rear.
10. Press the 4th speed gear on shaft, long hub to the front.
11. Press drive gear on shaft, long hub to the rear.
12. Install snap ring in groove at front of shaft (Fig. 11).
13. On the drive gear of each countershaft mark the gear tooth which is aligned with the keyway in shaft. This tooth will be stamped with an O (Fig. 12).
14. Place the left countershaft into position in case—do not install bearings.
15. Place the right countershaft into position in case—do not install bearings.
16. Place the mainshaft in vise with pilot end down. Keep keyway free for insertion of long key.

Each mainshaft gear is held in position by locking the gear splined washer to the mainshaft with key. There is one splined washer for each gear. Splined washers for the reverse, 1st, 2nd, and 3rd speed gears are identical; the 4th speed gear splined washer is of smaller diameter.

17. Install the second speed gear washer at second speed gear location, inserting key from bottom to lock washer in position.
18. Install the second speed gear on splined washer, clutching teeth down.
19. Install the first speed gear on shaft and against second speed gear, clutching teeth up.
20. Insert splined washer in hub of first speed gear. Align washer with mainshaft splines and move key up to lock washer in position.
21. Install the 1st-reverse sliding clutch, aligning slot in clutch with key.
22. Install the reverse gear splined washer, align keyway and lock with key.
23. Reposition assembly in vise with the pilot end up.
24. Install the 2nd-3rd speed sliding clutch, aligning keyway in sliding clutch with key in shaft.
25. Install the 3rd speed gear splined

washer; lift key to install washer under pin in key to lock in position.
26. Install the 3rd speed gear on mainshaft, fitting gear splines on those of washer (Fig. 13).
27. Install the 4th speed gear on mainshaft (clutching teeth up) and against 3rd speed gear.
28. Install the 4th speed gear splined washer on mainshaft and in hub of 4th speed gear.
29. Install snap ring in groove in mainshaft which will hold the 4th speed gear in position on shaft.
30. Install the 4th-5th speed sliding clutch on mainshaft, place in engagement with 4th speed gear.
31. **Mark timing teeth on drive gear (5th speed gear).**

Mark two adjacent teeth on drive gear. Mark the two adjacent teeth on drive gear which are directly opposite the first set marked. There should be the same number of teeth between markings on each side of gear.

32. Install the drive gear on mainshaft and against the 4th speed gear, snap ring groove in drive gear to the front.
33. Remove the assembly from vise and install the reverse gear on rear of mainshaft, engaging splines of gear with those of splined washer on mainshaft.
34. Move both countershafts toward case wall as far as possible.
35. Place the mainshaft assembly in position in case; block under front of mainshaft to center in front bore of case.
36. Press bearing on auxiliary drive gear, snap ring towards gear.
37. Install bearing retaining snap ring in groove of auxiliary drive gear shoulder.
38. Center mainshaft in rear bore of case and install auxiliary drive gear on splines of mainshaft.
39. Seat auxiliary drive gear bearing in rear bore of case.
40. In hub of auxiliary drive gear, install the coupling snap ring in groove in mainshaft.
41. Install the two bearing retainer plates on case.
42. Attach both upper and lower plates, using a double locking lug for each plate. Tighten capscrews securely and secure by bending locking lugs.
43. If previously removed, install bushing in pocket of clutch shaft; install flush with shaft, making sure that oil hole in shaft is not plugged.
44. Install the clutch shaft in splines of drive gear, moving gear forward against inside wall of case.
45. Install ring in groove in I.D. of drive gear.
46. Install the drive gear spacer on shaft.
47. Install the drive gear bearing on shaft and into case bore.
48. Install bearing retaining snap ring in groove in clutch shaft, taper to the outside.
49. Place the left countershaft into mesh with mainshaft gears, placing the marked timing tooth on countershaft drive gear into proper mesh with the two marked timing teeth on main drive gear.
50. Hold left countershaft in position and install front and rear bearings. Center rear of left countershaft in rear bore of case with wood block. Partially install front bearing on countershaft and in case bore. Partially install rear bearing on countershaft and in case bore. Use flanged bearing driver to complete seating both front and rear bearings.
51. Install snap ring in groove in rear bore of case.
52. Place the right countershaft into mesh with mainshaft gears, placing the marked timing tooth on countershaft drive gear into proper mesh with the two marked timing teeth on main drive gear (Fig. 14).
53. Hold right countershaft in position and install front and rear bearings in the same manner as installed on left countershaft.
54. Install snap ring in groove in rear bore of case.
55. Install the left reverse-idler gear front washer on pin in upper left of case.
56. Install needle bearing in hub of reverse-idler gear.
57. Set reverse-idler gear in position, long hub to the rear.
58. Place rear washer in holder if previously removed, oil slot down, and bend lugs to secure washer.
59. Place washer and holder into reverse gear case bore, oil slots toward gear, holder flange to the rear.
60. Install the auxiliary countershaft front bearing into the reverse-gear case bore to hold the reverse idler gear assembly in position.

The front portion of the auxiliary countershaft is used as a journal for the reverse idler gear.

MAIN TRANSMISSION SUB-ASSEMBLIES

SHIFTING BAR HOUSING

Disassembly

1. Remove the shifting bar housing from the transmission.
2. Remove the two capscrews retaining the tension spring cover and remove the cover from the housing.
3. Tilt the housing and remove the tension springs and balls from the bores in the top of the housing.
4. Set the housing in a vise with the plunger side up.
5. Cut the lock wires and remove the lock screws from each shifter shaft prior to its removal.
6. Move the top and center shifter shafts to the rear and out of the housing. Remove the shifting fork from each shaft. As the neutral detent in the center shaft clears the housing boss, remove the interlock pin (Fig. 15).
7. Remove the actuating plunger from the bore in the housing.
8. Move the lower shifter shaft to the rear and out of the housing. Remove the shifting fork from the shaft. **Do not lose the interlock balls as the lower shaft is removed.**

Assembly

Install the shifter shaft through the rear bores of the housing with the neutral detent notches to the rear. Keep the shafts in the neutral position when installed.

1. Place the housing in a vise with the plunger side up.
2. Install the first and reverse-speed shifter shaft in the bottom bore and through the shifting fork. Install the set screw and secure with lock wire.
3. Install the actuating plunger in the front opening of the housing and a three-quarter inch interlock ball in the rear opening.
4. Position the second and third-speed shifter shaft in the center bore and through the shift block and fork. **Be sure to install the interlock pin in the bore at the neutral notch (Fig. 15). Install the set screws and secure with lock wire. Keep the shifter shaft so that the interlock pin remains in a vertical position during the completion of the assembly. Rotating the shaft will cause the interlock pin to jam into the tension spring bores.**
5. Install a three-quarter inch ball in the rear opening of the housing.
6. Position the fourth and fifth-speed shifter shaft in the upper bore and through the shifting block and fork. Install the set screws and secure with lock wire.
7. Remove the gear shift housing from the vise and place it on a work bench. Install the three detent balls and springs into the top of the housing.

AUXILIARY TRANSMISSION

SEPARATION OF MAIN AND AUXILIARY SECTIONS

1. Disconnect the two nylon air lines at air valve on transmission.
2. Remove the gear shift lever housing lever and control valve as a unit by turning out the four attaching capscrews.
3. Disconnect and remove the air line, including clamp, between the air valve and air regulator.
4. Remove street ell and reducer from regulator if necessary.
5. Remove capscrews and remove the air regulator and filter assembly.
6. Remove the two air lines between the air valve and air cylinder in auxiliary.
7. Remove the four capscrews and remove the air valve from transmission. If necessary, remove fittings from air valve.
8. Remove the actuating spring and pin from bore in transmission.
9. Remove the attaching capscrews and lift the gear shift lever housing or remove control housing from the shift bar housing.
10. Remove the attaching capscrews, jar to break gasket seal and lift the shifting bar housing from transmission.
11. Lock the transmission by engaging two speeds with the mainshaft sliding clutch gears. Remove elastic stop nut from output shaft. Pull flange or yoke straight to the rear and off shaft.
12. Remove capscrews that attach main and auxiliary sections. Insert puller screws in auxiliary housing flange. Tighten puller screws evenly to move auxiliary section straight to the rear and from front section (Fig. 16).
13. Remove the clutch release mechanism if so equipped. Turn nuts from the six studs and turn out the two bolts which attach clutch housing to case. Break gasket seal and remove clutch housing from case.
14. Remove capscrews and remove the front gear cover. (Tap against drive gear from inside case to break gasket seal).

JOINING OF MAIN AND AUXILIARY SECTIONS

1. Install the drive gear bearing cover.
2. Install the clutch housing, attaching securely with the six nuts and two bolts.
3. If so equipped, install the clutch release mechanism.

The two reverse gears, including the washers, must be in perfect alignment with center of case bores as the front of the auxiliary countershafts must be inserted in these parts during auxiliary installation. A heavy grease or Lubriplate will help hold washers in place. Also check rear of front section to make sure all snap rings have been installed.

4. Install auxiliary section on front section, aligning auxiliary section on dowel pins and the extended portion of auxiliary countershafts with reverse idler gears. It may make assembly easier if someone slowly rotates clutch shaft during installation.

The auxiliary can also be installed with front section in a vertical position. Place clutch housing on blocks and use chain hoist to lower auxiliary section into position.

5. Secure the auxiliary with attaching capscrews.
6. Lock transmission by engaging two gears with the mainshaft sliding clutches.
7. Make sure the speedometer gear washer and the speedometer gear or replacement spacer are installed on tailshaft.
8. Install the companion flange on splines of tailshaft. Install the companion flange nut. Tighten securely, using the correct torque rating.
9. Make sure the shift bars are in the neutral position. Place the sliding clutches on the mainshaft in the neutral position.
10. Install the shifting bar housing on transmission, fitting yokes into yoke slots of corresponding clutch gears. Install the attaching capscrews, tighten securely.
11. Make sure the shifting notches on bars in the shifting bar housing are aligned in the neutral position.
12. Install the gear shift lever housing on shifting bar housing, fitting lower end of lever into notches in shifting block and yokes.
13. Install attaching capscrews, except capscrew at left-rear corner as this is used to secure air line.
14. If previously removed, install fittings on air valve.
15. Install the actuating pin and spring in bore in transmission.
16. Make sure the alignment sleeve is installed in air valve.

Before installing alignment sleeve, check bore in air valve to make sure the piston is either in a forward or rear position. Piston can be moved with air or pencil.

17. Install the air valve on transmission, tighten capscrews evenly and securely. Actuating plunger in case fits into alignment sleeve in air valve.
18. Install fittings in shift cylinder, if previously removed. This consists of two 90 degree street ells.
19. Install the high range air line between the air port in the rear cover of the air cylinder and the side rear port of the air valve.
20. Install the low range air line from air port in top of cylinder to the side air port in air valve. This is the side port which is towards the front of the transmission and constant supply of air valve.
21. Tighten the hexagonal nut on regulator to secure regulator to bracket, exhaust port away from transmission.
22. Tighten the two capscrews which attach the bracket to filter.
23. If previously removed, install bushing and 90 degree street ell in output port of air regulator. Street ell faces toward the gear shift lever housing when assembly is installed.
24. Install the air regulator and filter assembly on mounting surface on left side of transmission, tighten capscrews securely.
25. Install air line between output port of air regulator and the tee in supply port of air valve. Fasten hose with clamp at left-rear capscrews location on gear shift lever housing.
26. Replace the gear shift lever housing lever and control valve. Tighten the four attaching capscrews.
27. Install the black nylon air line from the **OUT** port of control valve to the air port in hexagonal end cap of air valve.
28. Install the white nylon air line from the **IN** port of control valve to the tee in supply port of air valve.

DISASSEMBLY OF AUXILIARY SECTION

1. Use pullers to remove bearing from front of tailshaft.
2. Turn out capscrews and remove the rear bearing cover.
3. If necessary, remove the rear seal from cover.
4. Remove the speedometer gear or replacement spacer from tailshaft.
5. Remove the speedometer gear washer.
6. Remove inside housing, use long punch to move outer races of countershaft rear bearings to the rear; move races approximately one-half inch (Fig. 17).
7. Pull the countershafts forward and out of housing.
8. Pull bearing inner race from rear of countershaft (Fig. 18).

9. Remove snap ring from groove in front of shaft.
10. Press the drive gear forward and from shaft. If necessary, remove key from countershaft.
11. Remove capscrews and remove the air cylinder cover.
12. Remove the nut and lock washer from air cylinder piston shaft.
13. Use air to remove piston (Fig. 19).
14. If necessary, remove O-ring from OD of piston.
15. Remove the copper seal from shaft.
16. Move the synchronizer assembly, shift yoke, and piston shaft forward and out of housing as a complete assembly.
17. Remove the shaft and yoke from synchronizer assembly.
18. Cut lock wire, turn out the two lock screws and remove yoke from shaft.
19. Place the larger low range synchronizer ring on bench.
20. Turn and pull upward to remove the high range synchronizer from pins (Fig. 20).

There are three springs located in housing of high range synchronizer which will be released as high range synchronizer is removed from pins.

21. Remove the sliding clutch from low range synchronizer pins.
22. Remove the dust seal, and air port extension from top of housing (Fig. 21).
23. Remove air cylinder from housing.
24. Remove O-ring from small bore in cylinder, if necessary.
25. Drive or press against rear of tailshaft to move low speed gear and tailshaft assembly forward and from rear bearing (Fig. 22).
26. Remove the rear washer and the low speed gear from rear of shaft.
27. Remove spline washer from hub of low speed gear.
28. Move the mainshaft rear bearing to the rear and out of housing.
29. Use bearing driver to remove the countershaft rear bearings from housing.

ASSEMBLY OF AUXILIARY SECTION

1. Make sure magnetic cleaner is installed in recess in auxiliary case.
2. Mark timing teeth on the low speed gear.

Mark any two adjacent gear teeth on low speed gear. Then, mark the two adjacent teeth which are directly opposite the first set marked. There should be the same number of teeth between the markings on each side of the gear.

3. Place splined spacer in hub of low speed gear, shoulder toward rear.
4. Install the low speed gear and spacer over rear of shaft and against

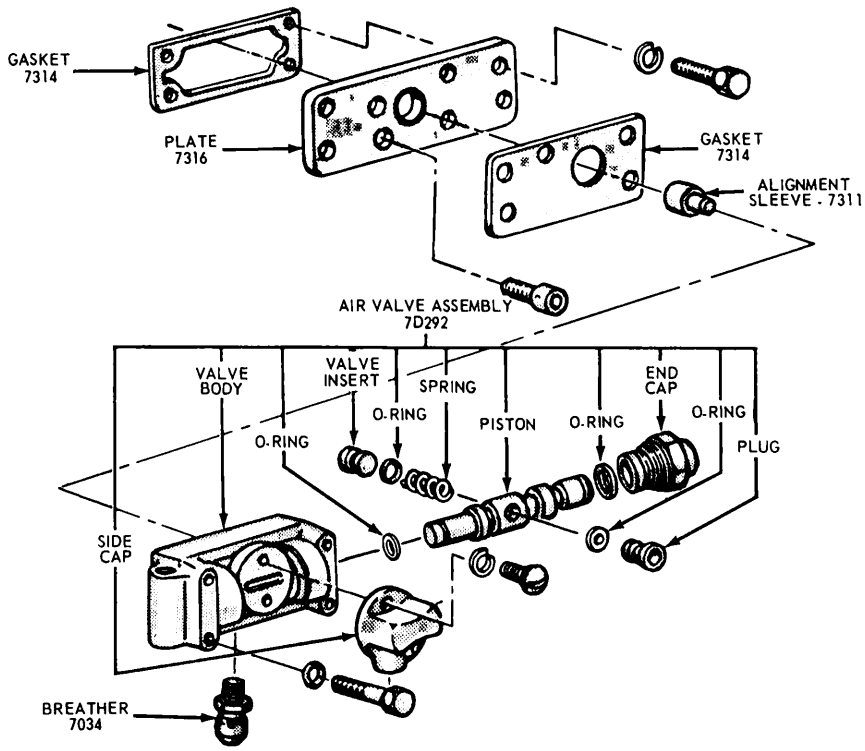

FIG. 4 Air Valve Disassembled

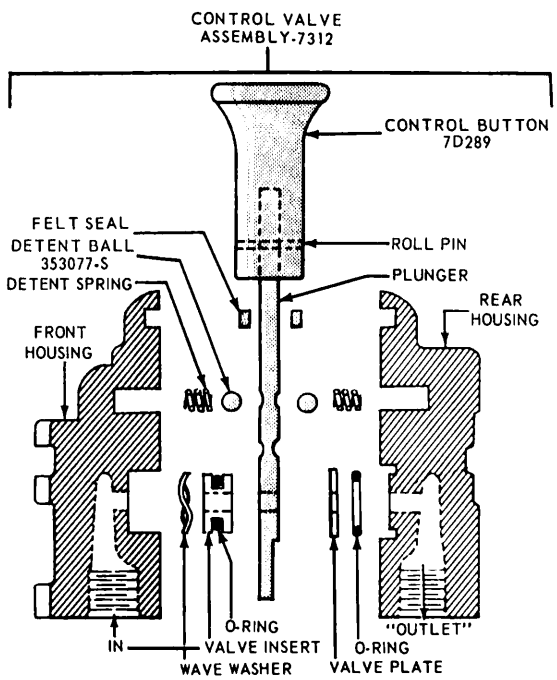

FIG. 5 Range Shift Control Valve—Disassembled

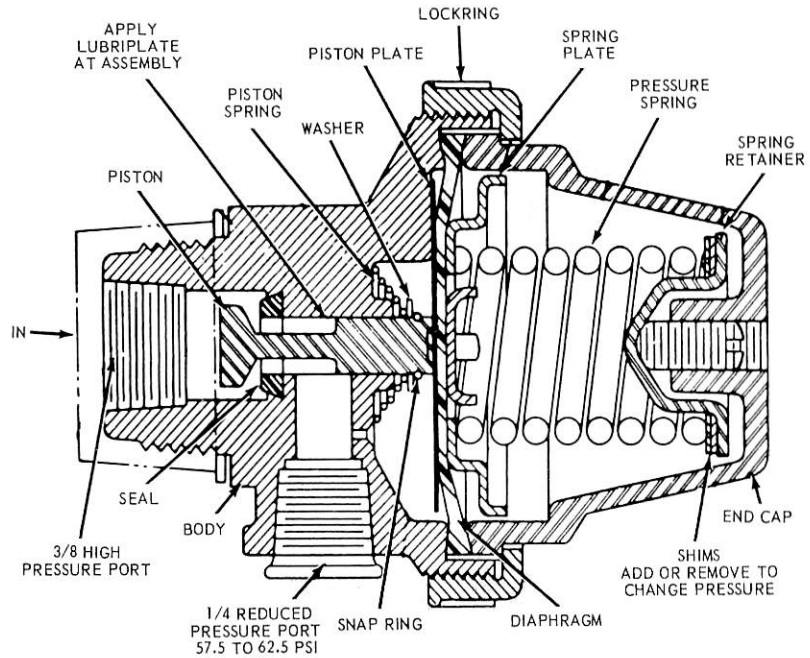

FIG. 6 Air Regulator—Sectional View

shoulder, clutching teeth to the front.

5. Install the low speed gear rear washer on shaft and against gear, chamfer to the rear.
6. Set the tailshaft with the forward end down and place auxiliary housing over rear of shaft so that shaft extends through rear bore.
7. Seat mainshaft rear bearing securely on shaft and in bore.
8. Install O-ring in slot in small bore in range shift air cylinder.
9. Install cylinder in housing with small bore in cylinder aligned with air port in top of auxiliary.
10. Install dust cover and air port extension through housing and into bore of air cylinder.
11. Place the shifting yoke on piston shaft, fork towards thread end.
12. Align slots in shaft with bores in yoke hub and install the two lock screws. Secure with safety wire.
13. Place yoke in slot of sliding clutch; thread end of piston shaft is towards the larger low range synchronizer.
14. Place the entire assembly into auxiliary housing, threading splined sliding clutch on tailshaft and inserting piston shaft through cylinder bore.
15. Install copper seal on thread end of piston shaft.
16. Install O-ring on OD of piston.
17. Install piston on shaft and against copper washer, flat side of piston out.
18. Install lock washer and nut on shaft to secure piston.
19. Install gasket and cylinder cover. Tighten the four capscrews securely.
20. Place the larger low range synchronizer ring face down on bench with pins up.
21. Place the sliding clutch, recessed side up, on pins of low range synchronizer.
22. Install the three springs in bores in high range synchronizer ring (Fig. 23).
23. Place the high range synchronizer ring over pins of the low speed synchronizer ring, seating springs against pins.
24. Apply pressure to high range synchronizer ring to compress springs and seat pins of low range synchronizer fully into bores of high range synchronizer ring.
25. If previously removed, install keys in keyways in countershafts.
26. Press drive gear on each countershaft, long hub to the rear.
27. Install snap ring in front of each countershaft.
28. Install bearing inner race on rear of each countershaft.
29. **To mark countershaft gear teeth for timing: Mark the tooth on the countershaft low speed gear which is aligned with the keyway in drive gear. This gear tooth will be stamped with an O (Fig. 24).**
30. Seat the outer races of the countershaft rear bearings only partially in bores, just far enough to stay in place.
31. Place countershafts into position in auxiliary housing, inserting inner races into the partially installed outer races.

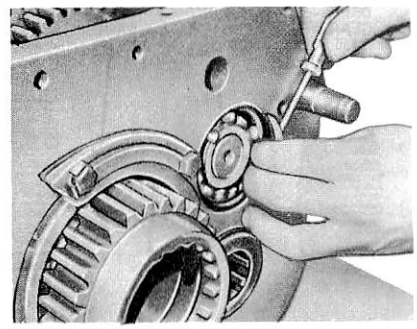

FIG. 7 Removing Right Countershaft Snap Ring

Timing countershaft gears with low speed gears: As the countershafts are installed, mesh the marked low speed gear tooth on each countershaft between each set of marked gear teeth on the low speed gear.

32. With countershafts in position, complete the installation of the countershaft rear bearings on shaft and into case bore. Seat securely.
33. Install the speedometer gear rear washer on tailshaft and against bearing, chamfered ID towards bearing, and install the speedometer gear or replacement spacer on shaft and against washer. If previously removed, install oil seal in rear bearing cover, lip of seal to the rear.
34. Install the rear bearing cover with the speedometer bore up and to the left, tighten capscrews securely. Install bearing on front of tailshaft.

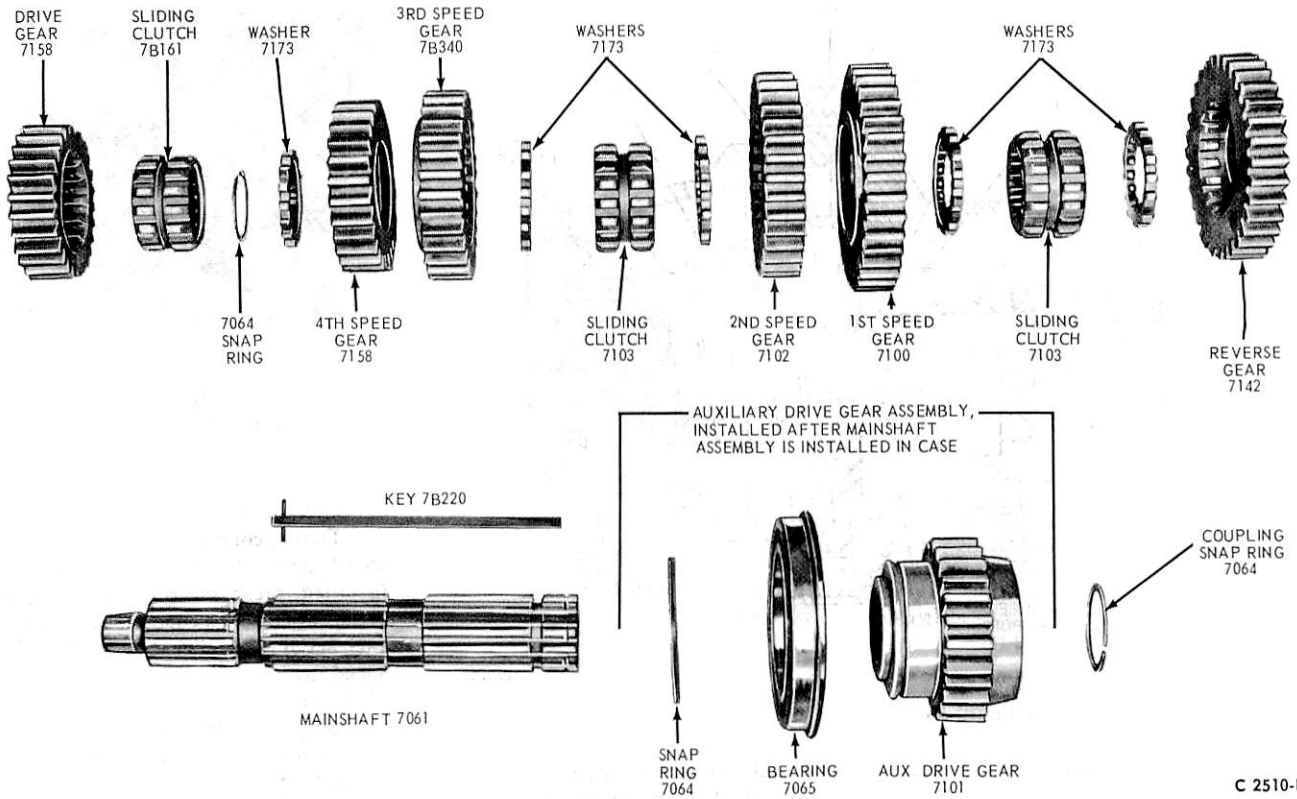

FIG. 8 Mainshaft and Auxiliary Drive Gear Disassembled

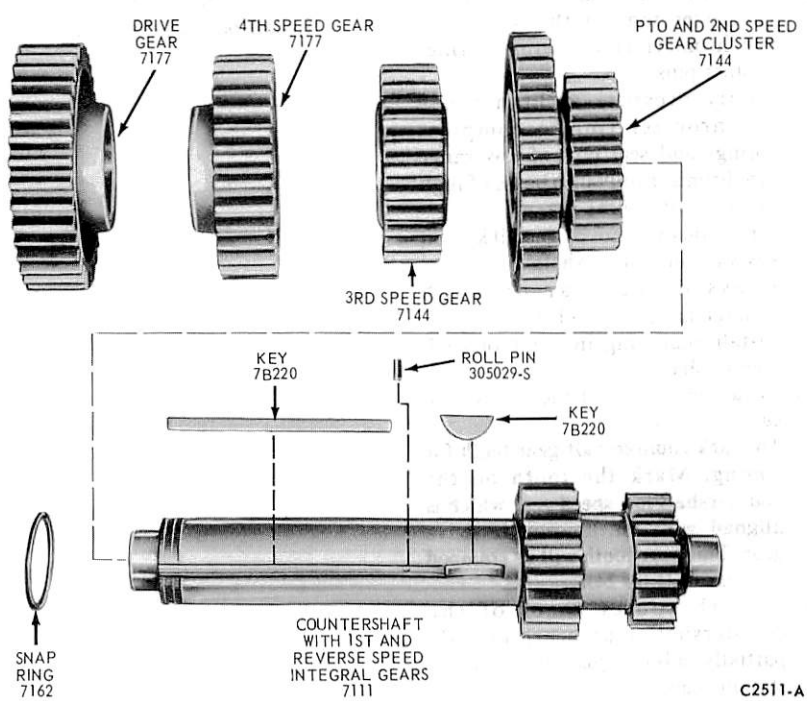

FIG. 9 Front Section Countershaft Disassembled

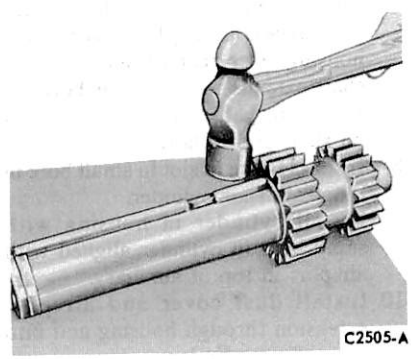

FIG. 10 Installing Keys in Countershaft

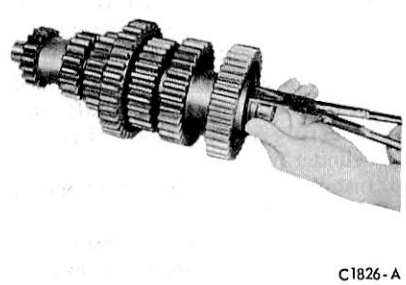

FIG. 11 Installing Countershaft Front Snap Ring

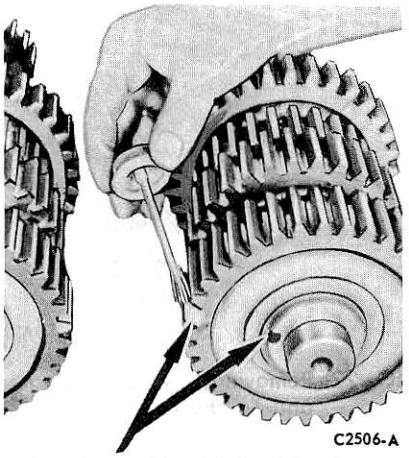

FIG. 12 Marking Timing Tooth on Countershaft Drive Gear

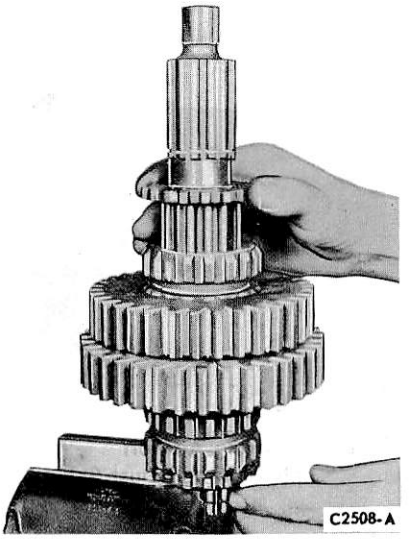

FIG. 13 Placing Third Speed Gear Splined Washer on Mainshaft

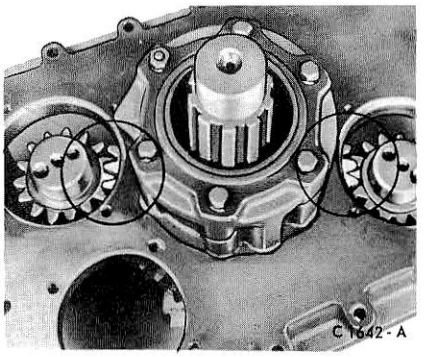

FIG. 14 Meshing Countershafts and Low Speed Gear

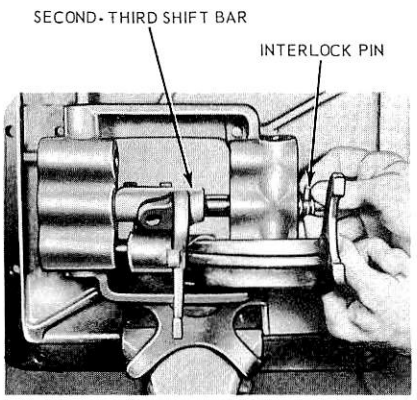

FIG. 15 Removing Shift Rod Interlock Pin

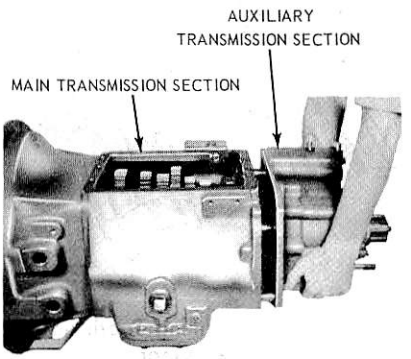

FIG. 16 Separating Main and Auxiliary Sections

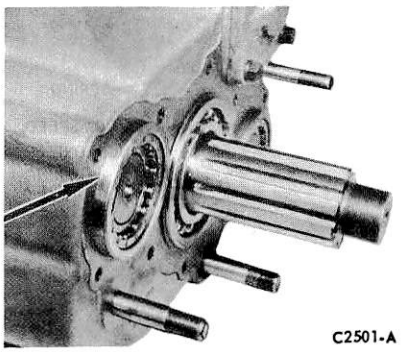

FIG. 17 Moving Outer Countershaft Races Rearward

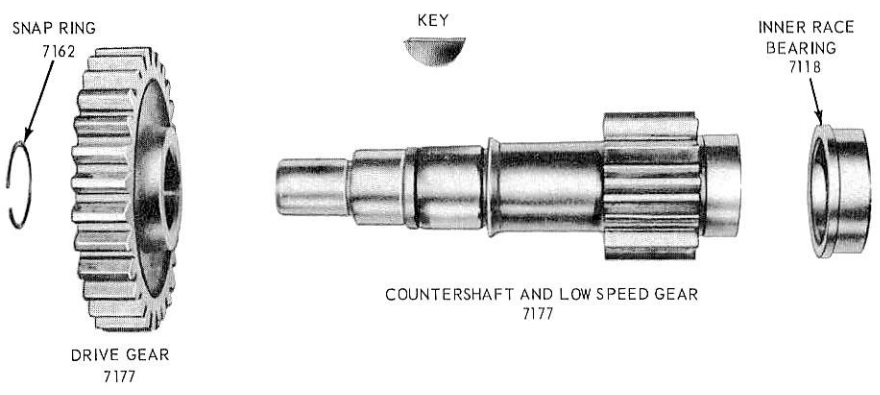

FIG. 18 Auxiliary Section Countershaft Disassembled

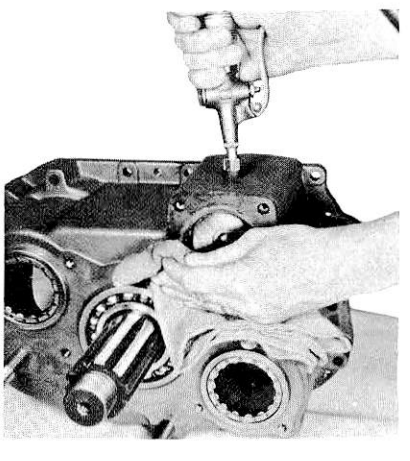

FIG. 19 Removing Piston

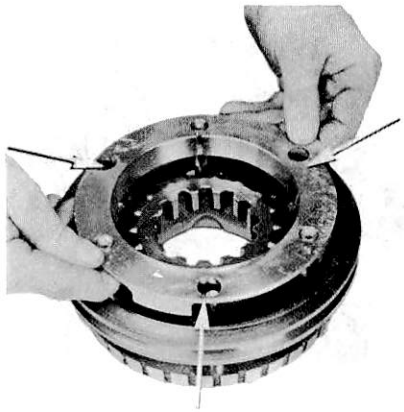

C2503-A

FIG. 20 Removing High Range Synchronizer

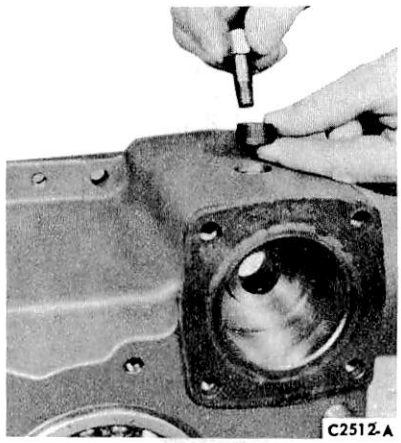

C2512-A

FIG. 21 Removing Air Port Extension and Dust Seal

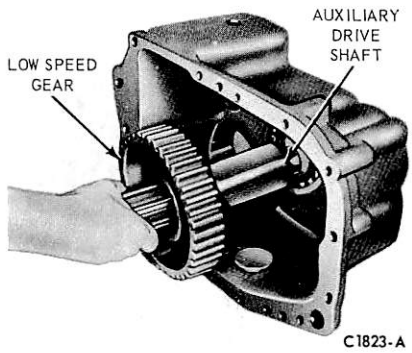

C1823-A

FIG. 22 Removing Low Speed Gear and Tailshaft

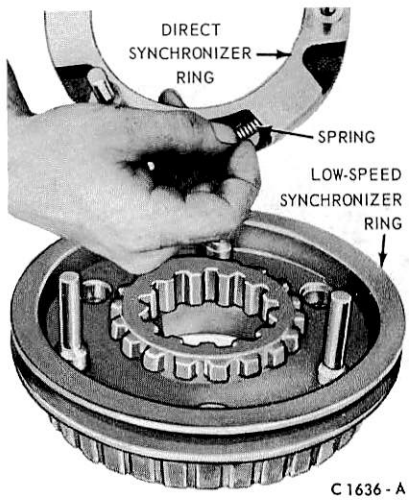

C 1636 - A

FIG. 23 Installing Synchronizer Springs

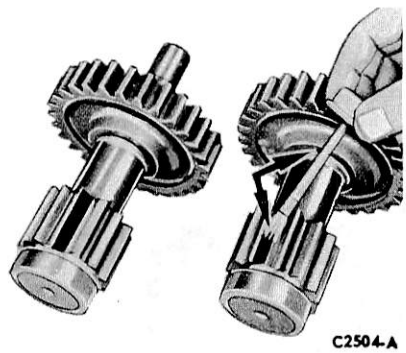

C2504-A

FIG. 24 Marking Timing Tooth on Low Speed Gear

SPECIFICATIONS

APPROXIMATE LUBRICANT REFILL CAPACITY (PTS)

Transmission–Fuller RT-610	US	IMP
SAE50 Engine Oil (ESE-M2C39-A)	12	10

TORQUE LIMITS-FULLER RT-610

BOLTS		
Location	Thread Size & Length	Torque (Ft-Lb)
Air Filter	1/4-20 x 1/2	15-20
Air Valve	1/4-20 x 1-3/4	15-20
Air Filter to Case	3/8-16 x 3/4	20-25
PTO Cover, Right (used with oil filter)	3/8-16 x 3/4	12-15
Bearing Retainer	3/8-16 x 1	
Rear Bearing Cover	3/8-16 x 1	
Front Bearing Cover, Top	3/8-16 x 1-1/4	
Front Bearing Cover, Bottom	3/8-16 x 1-1/4	
Air Cylinder Cover	3/8-16 x 1-1/2	
Shift Lever Housing	3/8-16 x 1-1/4	35-45
Tension Spring Cover	3/8-16 x 1-1/4	
Auxiliary to Transmission	3/8-16 x 1-1/4	
Shift Bar Housing	3/8-16 x 1-1/4	
Rear Bearing Cover	3/8-16 x 2-3/4	
PTO Cover, Bottom	7/16-14 x 1-1/4	50-65
Clutch Housing to Case	1/2-13 x 1-1/4	70-75

NUTS

Location	Thread Size	Torque (Ft-Lb)
Clutch Housing Studs	5/8-18	170-180
Rear Support Studs	5/8-18	170-180
Air Piston	1/2-20	60-70
Output shaft	1-1/2 - 18	400-450

CC 1117 A

PART 16-61 Fuller RT and RTO 910 Ten Speed Transmission

Applies To L-, LN, LT-, LNT-, LTS-, W-, WT-9000

COMPONENT INDEX	Page
AIR SHIFT CONTROLS	
Air Valve	
Disassembly and Assembly	61-04
Removal and Installation	61-04
Master Control Valve	
Disassembly and Assembly	61-04
Removal and Installation	61-04
AUXILIARY SECTION	
Disassembly and Assembly	61-04
Removal and Installation	61-04
AUXILIARY SECTION SUB-ASSEMBLIES	
Countershaft	
Disassembly and Assembly	61-08
Output Shaft	
Disassembly and Assembly	61-09
Synchronizer	
Disassembly and Assembly	61-08
GEAR SHIFT LINKAGE	
Adjustment–W-Series	61-01

COMPONENT INDEX	Page
MAIN TRANSMISSION	
Description	61-01
Disassembly and Assembly	61-05
Removal and Installation	61-03
MAIN TRANSMISSION SUB-ASSEMBLIES	
Countershafts	
Disassembly and Assembly	61-07
Drive Gear	
Disassembly and Assembly	61-07
Gear Shift Housing	
Disassembly and Assembly	61-07
Removal and Installation	61-07
Mainshaft	
Disassembly and Assembly	61-06
Shifting Bar Housing	
Disassembly and Assembly	61-07
Removal and Installation	61-07
SPECIFICATIONS	61-15

DESCRIPTION

TRANSMISSION

Models RT and RTO-910 consists of two sections; a five-speed transmission with closely spaced ratios, and a two-speed auxiliary with wider spaced ratios.

Both models are a twin countershaft design, which splits torque equally between the two shafts, providing a high torque capacity to weight ratio. Because of torque splitting, each gear set carries only half the load, greatly reducing the face width of each gear. The mainshaft gears when not engaged float between the countershaft gears, eliminating the need for gear sleeves and bushings. All gears are in constant mesh and have spur type teeth (Fig. 1).

ADJUSTMENTS

GEAR SHIFT LINKAGE—W-SERIES

1. Place the gear shift lever in the neutral position.
2. Loosen the bolts on the shift rod turnbuckle (Fig. 2). Then, rotate the turnbuckle until the rear of the shift knob is located 10 to 10 1/2 inches from the front face of the instrument panel. Torque the lower turnbuckle bolt.
3. While holding the rear cross-shaft lever in the extreme right position, move the gear shift lever (in neutral) until the outside edge of the shift knob is 2 29/32-3 13/32 inches from the console edge. Torque the upper turnbuckle bolt.
4. Check the operation of the gear shift lever in all positions and readjust if necessary.

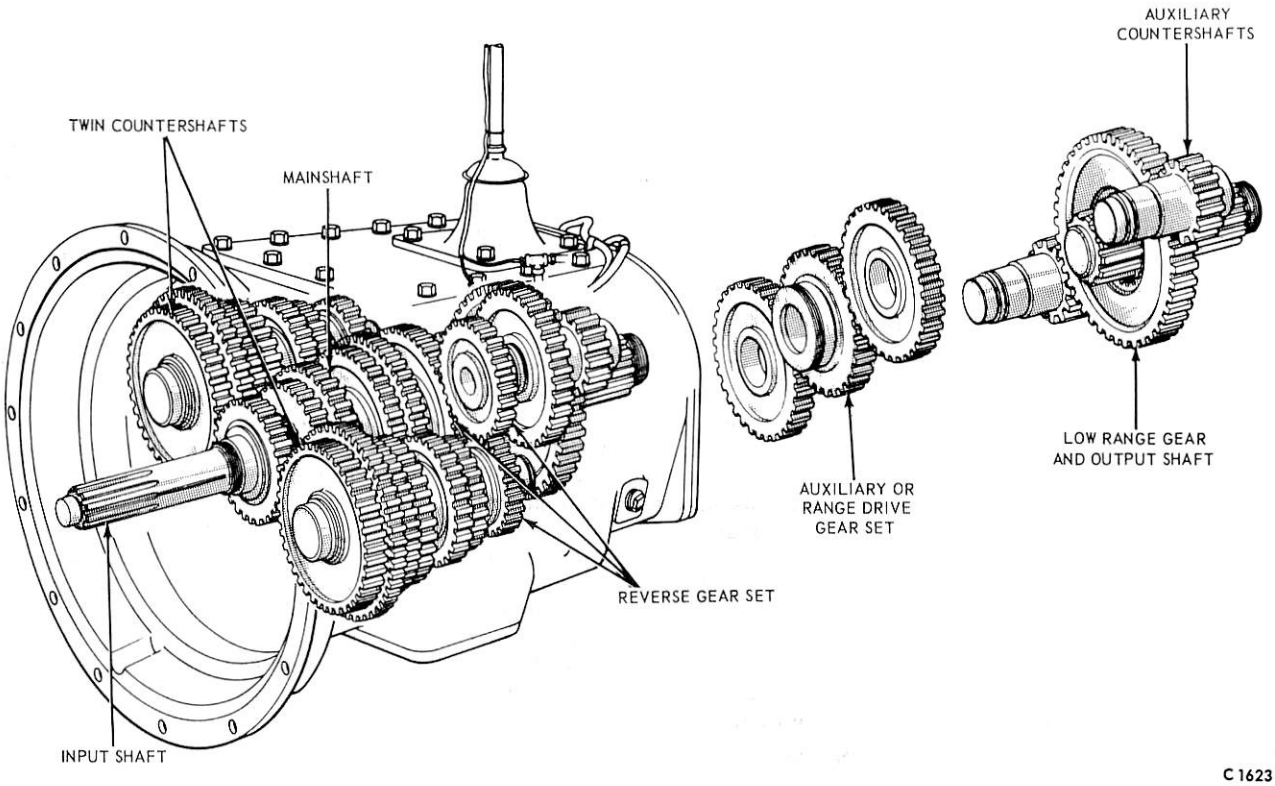

FIG. 1 10-Speed Transmission—Fuller RT and RTO-910

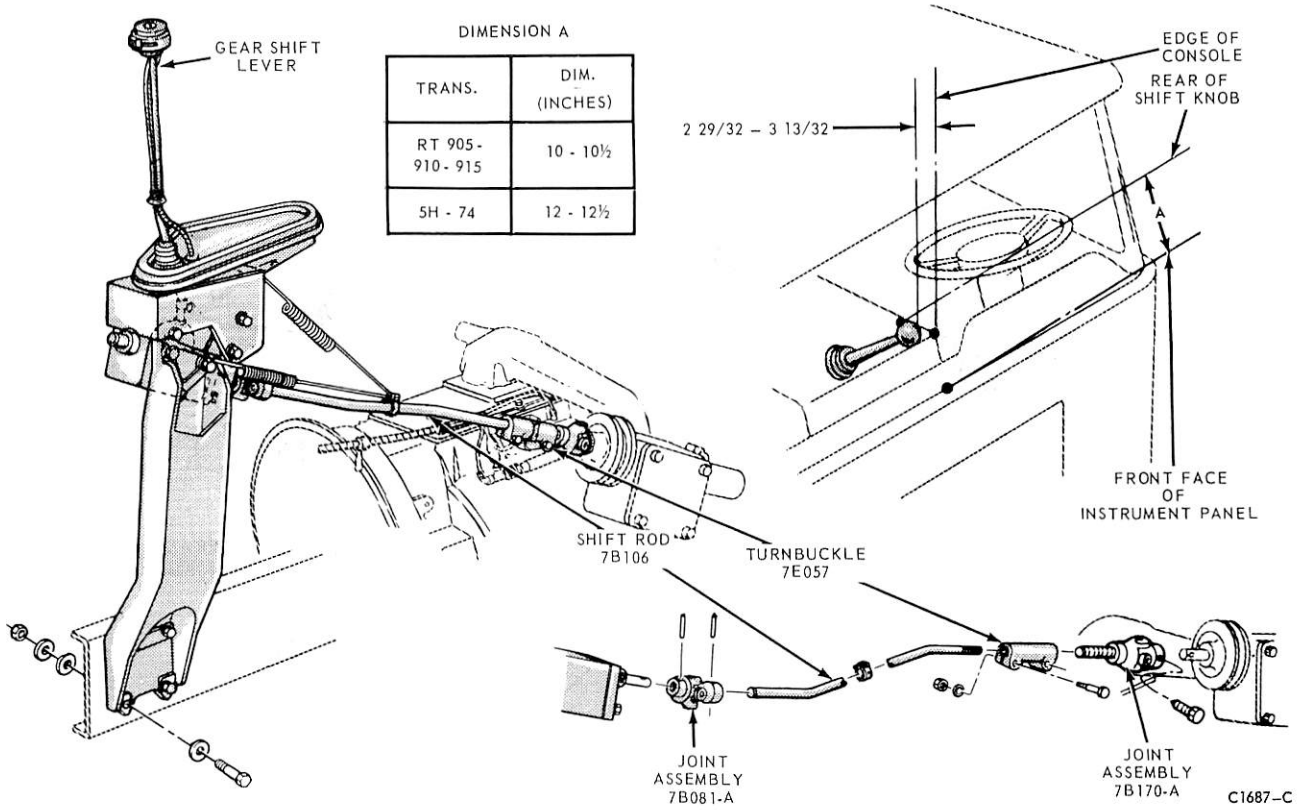

FIG. 2 Gear Shift Linkage Adjustments—W-Series

REMOVAL AND INSTALLATION

TRANSMISSION ASSEMBLY

REMOVAL

1. Bleed the air reservoir and disconnect the air line at the rear of the transmission.
2. Disconnect the drive shaft at the transmission compantion flange.
3. Disconnect the speedometer cable at the transmission.
4. After cleaning the area around the cross-shaft housing, remove the housing and tie it out of the way. Cover the opening in the gear shift housing to prevent the entry of dirt.
5. Remove the shift control cable, speedometer cable and fuel line retaining clamps.
6. Disconnect the nylon cables at the air valve and shift cylinder.
7. Disconnect the clutch linkage at the clutch release arm.
8. Remove all but two of the clutch housing attaching bolts at the engine. Remove the dust cover from the bottom of the clutch housing.
9. Position a jack under the transmission, and raise the transmission slightly to relieve pressure at the side rail mounting brackets.
10. Remove the bolts that attach the transmission support to the frame side rail brackets (Fig. 3). After removing the lock wire, remove the transmission support-to-transmission case bolts, washers, insulators, and spacers and remove the support.
11. Attach a chain hoist to the transmission if working on a W-Series truck.
12. **After removing the remaining clutch housing attaching bolts, pull the transmission rearward to clear the input shaft.**
13. Raise the truck to provide clearance in removing the transmission. Install safety stands, and then remove the transmission from under the truck. **On a W-Series truck, the transmission must be lifted out rather than lowered.**

INSTALLATION

1. Place the transmission on a transmission jack (or chain hoist) and position the transmission input shaft in the clutch discs. As the input shaft enters the clutch, rotate the clutch release yoke so that the release yoke fingers contact the release bearing in their proper position. Be sure to position the clutch release bearing with *the flat* section on top.
2. Install the clutch housing attaching bolts and torque them to specifications. Install the clutch housing dust cover.
3. If working on a W-Series truck, support the transmission with a jack and remove the hoist chains.
4. Position the transmission support to the frame side rail brackets and install the attaching bolts (Fig. 3).
5. Install the support-to-transmission case bolts, washers, insulators, and spacers. Torque the bolts to specifications and secure them with lock wire. Remove the jack.
6. Connect the clutch linkage to the clutch release arm.
7. Connect the nylon cables to the air valve and shift cylinder. Connect the speedometer cable and install the retaining clamps.

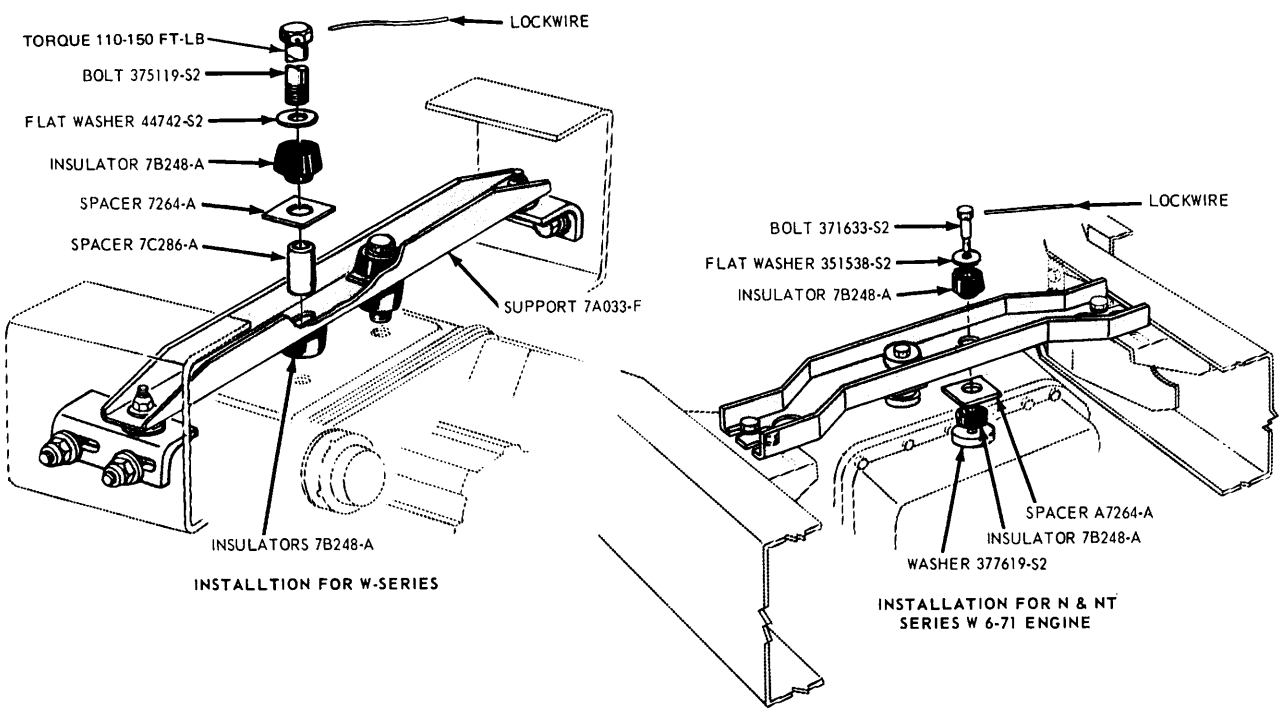

FIG. 3 Transmission Rear Support

8. Install the shift control cable and fuel line retaining clamps.
9. Install the cross-shaft housing, and torque the mounting bolts to specifications.
10. Connect the drive shaft and torque the bolts to specifications.
11. Lower the truck to the floor. Start the engine to build up air pressure, and check for leaks.

DISASSEMBLY AND ASSEMBLY

AIR SHIFT CONTROLS

AIR VALVE

Disassembly

1. Remove the floor mat and the floor plate.
2. Place the gear shift lever in the neutral position. Drain the air from the system.
3. Disconnect the air line leading from the regulator to the fitting on the air valve (Fig. 4).
4. Disconnect the two air cylinder lines from the air valve.
5. Disconnect the two nylon air lines from the air valve.
6. Remove the air valve attaching bolts and remove the valve gasket, and the alignment sleeve (Fig. 5).
7. Thoroughly clean the valve in cleaning solvent and dry it with compressed air.
8. Remove all air line fittings and the vent from the valve.
9. Remove the two screws securing the side cap to the valve body and remove the cap (Fig. 5).
10. Remove the valve insert and spring from the piston. Remove the O-ring from the valve insert.
11. Remove the end cap and piston from the valve body. Remove the two O-rings from the piston.
12. Remove the nylon plug from the piston and remove the O-ring from the plug.

Assembly

1. Use all new O-rings and lubricate them with a thin film of vaseline before installing them.
2. Install O-rings on the piston and nylon plug. Install the plug in the piston (Fig. 5).
3. Insert the piston in the valve body and install the end cap. Tighten the cap securely.
4. Install the spring into the piston.
5. Install an O-ring on the valve insert and install it in the piston.
6. Secure the side cap to the valve body with the attaching screws and lock washers. Tighten the screws securely.

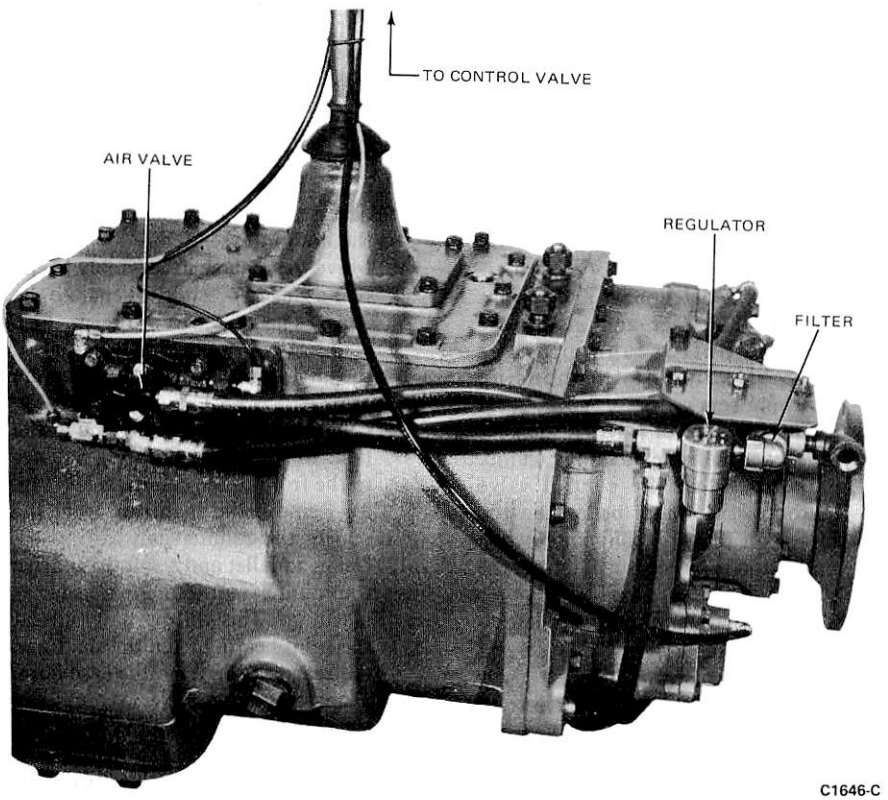

FIG. 4 Transmission Air System

7. Coat the fittings with sealer and install them in their respective ports. Install the vent in the body.
8. Place the gear shift lever in the neutral position. The lever must remain in this position until air pressure has been admitted to the system.
9. Apply air pressure to the front port of the air valve to move the pistons to the rear. Failure to comply with these two steps may result in damage to the valve.
10. Position the alignment sleeve in the valve body.
11. Place a new gasket on the body.
12. Secure the body to the transmission with the attaching screws and lock washers. Tighten the screws to specification.
13. Connect all air lines to the valve as shown in Fig. 4.

MASTER CONTROL VALVE

Disassembly

1. Drain the air from the system.
2. Disconnect the two nylon lines from the fittings.
3. Loosen the attaching clamp and remove the master control valve from the gear shift lever.
4. Place the control valve with the rear housing (outlet side) on a bench, and remove the front and rear housing attaching bolts.
5. Remove the control button and plunger assembly (Fig. 6).
6. Remove the detent balls, springs, and felt seals from the valve housings.

7. Remove the valve plate and O-ring from the rear housing.
8. Lift the valve insert from the front housing, and remove the O-ring.
9. Remove the wave washer installed under the valve insert.
10. If necessary, drive the roll pin from the button with a punch then remove the control button from the plunger.

Assembly

1. Insert the wave washer in the front housing bore (Fig. 6).
2. Install a new O-ring on the valve insert and install the insert into the front housing.
3. Position a new O-ring into the rear housing bore and install the valve plate.
4. Install a felt seal into the top of each housing.
5. If the control button was removed, secure it to the plunger with the roll pin.
6. Position the detent balls and springs into the housings and install the control button and plunger assembly, install the housing attaching screws.
7. Secure the control valve to the gear shift lever with the attaching clamp. Make sure that the control valve button is six inches below the top surface of the gear shift knob when the button is pulled out. Tighten the clamp.
8. Connect the white nylon air line to the inlet port (right side) of the master control valve.
9. Connect the black nylon air line to the outlet port (left side).

MAIN TRANSMISSION

Refer to Auxiliary Section for instructions on separating the main and auxiliary sections of the transmission.

DISASSEMBLY

1. Remove the snap ring from the inside of the auxiliary drive gear.
2. Remove the spacer from the bore of the auxiliary drive gear.
3. Remove the rear mainshaft coupling snap ring.
4. Cut the lock wire and remove the bolts that attach the bearing retainer ring to the case. Insert three puller screws in the tapped holes of the retainer ring and tighten the bolts evenly and alternately to pull the assembly from the case (Fig. 7).
5. Remove snap ring from shoulder of auxiliary drive gear. Then, press or **drive the bearing retainer ring and the bearing from the gear.**
6. Move the mainshaft reverse gear to the rear as far as possible and remove the reverse gear snap ring. Then, move the reverse gear forward and against the low-speed gear and into engagement with the sliding clutch gear. Remove the snap ring and the reverse gear splined spacer from the mainshaft.
7. Working from inside the case, remove the left reverse idler shaft nut and washer.
8. Remove the plug (Fig. 8) from the reverse idler shaft bore. Using an impact puller, remove the reverse idler gear shaft. Remove the thrust washer, gear, and cup.
9. If necessary, remove the bearing inner race from the reverse idler shaft, and the bearing from the bore of the reverse idler gear (Fig. 8). If necessary, remove the bearing from the bore in case.
10. Move the mainshaft assembly to the rear as far as possible to separate the mainshaft gears from the countershaft gears. Tilt the front of the mainshaft and lift it from the case.
11. Cut the lock wire and remove the bolts that attach the bearing retainer to the front of the countershaft (Fig. 9). Remove the snap ring from the rear of the countershaft.
12. Using a mallet and a soft drift, drive the countershaft to the rear as far as it will go. This will partially unseat the front bearing from the shaft and the rear bearing from the case bore.
13. Using a suitable puller, remove the countershaft rear bearing from the shaft and case bore.
14. Move the countershaft forward until the front bearing is clear of the case. Then, pull the front bearing from the shaft.
15. Remove the left countershaft bearings in the same manner.
16. Remove the input shaft bearing retainer attaching bolts.
17. Working from inside the case tap the input shaft forward and remove the bearing retainer. Remove the snap ring from the input shaft bearing.
18. Move the input shaft assembly to the rear and remove it from the case.
19. Move the front of the right countershaft toward the center of the case and, at the same time, lift it from the case.
20. Remove the left countershaft in the same manner.
21. Working from inside the case, remove the right reverse idler shaft nut and washer.
22. Remove the plug (Fig. 8) from the reverse idler shaft bore. Using an impact puller, remove the reverse idler gear shaft. Remove the thrust washer and gear.
23. If necessary, remove the inner bearing race from the reverse idler shaft, and the bearing from the base of the reverse idler gear (Fig. 8). If necessary, remove bearing from case bore.

ASSEMBLY

1. Install the plug in the right reverse idler shaft.
2. Install the needle bearings in the bore of the reverse idler gear if they were removed.
3. Install the bearing inner race on the reverse idler shaft if it was previously removed.
4. Insert the threaded end of the idler shaft through the right wall of the case. As the shaft is moved forward, install the reverse idler gear and thrust washer. **Be sure the needle bearings in the gear are seated evenly on the shaft inner race before moving the shaft forward. The thrust washer should be positioned between the gear and the boss, with the slot toward the gear (Fig. 10).**
5. Position the washer over the threaded end of the shaft, and secure it with the elastic stop nut.
6. To install and time the countershaft assemblies, mark the drive gear tooth that aligns with the keyway of each countershaft. This tooth will be stamped with an O.
7. Position the left and right countershaft assemblies into the case. **Make sure the left countershaft assembly has the larger 47-tooth PTO gear.**
8. Mark any two adjacent gear teeth on the input shaft drive gear. Then, mark two adjacent teeth which are directly opposite the first set marked.
9. Install the input shaft through the front bore from inside the case. Move the shaft as far forward as possible and install the snap ring on the input shaft bearing.
10. Using a wood block, center the front of the left countershaft in the case bore. Then, mesh the marked tooth on the left countershaft drive gear with the two teeth marked on the input shaft main drive gear (Fig. 11).
11. With the countershaft as far to the rear as possible, install the rear bearing on the shaft and into the case bore.
12. Remove the wood block and install

the front bearing on the countershaft into the case bore.
13. Install the snap ring on the rear of the countershaft.
14. Position the bearing retainer plate on the front of the countershaft and secure with the attaching bolts and lock wire.
15. After installing the left countershaft assembly in the case, install the right countershaft in the same manner.
16. Position the input shaft bearing retainer to the case and secure with the attaching bolts.
17. Lower the mainshaft assembly into the case. Place a bar across the top of the case and install a support wire under the forward sliding clutch gear (Fig. 12).
18. Align the mainshaft assembly, making sure that the mainshaft gears and the corresponding gears on the countershafts are properly engaged, and that the quill bearing is seated in the pocket of the main drive gear (Fig. 12). Remove the support wire and bar. **Keep the mainshaft assembly in the forward position during the installation of the left reverse idler gear so that the gears will not slip out of mesh.**
19. Install the plug in the left reverse idler shaft.
20. Install the needle bearings in the bore of the reverse idler gear if they were removed.
21. Install the bearing inner race on the reverse idler shaft if it was previously removed.
22. Insert the threaded end of the idler shaft through the left wall of the case. As the shaft is moved forward, install the reverse idler gear and thrust washer. **Be sure the needle bearings in the gear are seated evenly on the shaft inner race before moving the shaft forward. The thrust washer should be positioned between the gear and the boss, with the slot toward the gear.**
23. Install the washer over the threaded end of the shaft, and secure it with the elastic stop nut.
24. Move the mainshaft reverse gear to the rear so that it engages the reverse idler gears. Then, install the reverse gear spacer (flat side inward) into the hub of the reverse gear. Install the reverse gear snap ring.
25. If the auxiliary drive gear was disassembled, place the bearing retainer on the gear and press the bearing into place. Install snap ring.
26. Position the auxiliary drive gear assembly into the rear case bore, align gap in auxiliary drive gear with key in mainshaft, and install the attaching bolts. Wire the bolts in groups of three.
27. Pull the mainshaft as far to the rear as possible and install the mainshaft rear snap ring.
28. Place the spacer in the bore of the auxiliary drive gear, and install the snap ring.
29. Install the auxiliary countershaft front bearings into the reverse idler shaft bores.

MAIN TRANSMISSION SUB-ASSEMBLIES

MAINSHAFT

Disassembly

1. Remove the fourth-fifth-speed sliding clutch gear from the mainshaft.
2. Remove the mainshaft reverse speed gear.
3. Remove the long key located between the splines of the mainshaft.
4. Remove the reverse gear washer and remove the first-reverse sliding clutch gear. Remove the remaining washers, spacers, and gears from the shaft. **When removing washers, spacers, and gears, note their location to facilitate the reassembly of the mainshaft. Keep washers and spacers with the gear from which they were removed; there is one spacer and one washer from each gear.**
5. If the quill bearing is to be removed, remove the snap ring and pull the bearing from the quill.
6. If necessary, remove the snap rings from each mainshaft gear.

Assembly

1. Except for the reverse gear, install a snap ring in each mainshaft gear if it was removed (Fig. 13).
2. Position the mainshaft in a vise, with the front end up.
3. Install the reverse gear washer (flat side down) in the fifth groove from the top of the mainshaft.
4. From the bottom, install the long key in the keyway of the mainshaft so that the forward end is moved through the slot of the reverse gear washer. Keep the snap ring groove in the key to the rear and to the outside. **Move the key upward to engage each washer as it is placed on the mainshaft.**
5. Install the first-reverse-speed sliding clutch gear on the mainshaft, making sure that the keyway is lined up with the key in the shaft.
6. Install the first-speed gear washer (flat side up) in the fourth groove from the top of the mainshaft. Then, move the key upward through the slot in the first-speed gear washer until the front of the key is level with the third groove from the top.
7. With the flat side down, install the first-speed gear spacer on the mainshaft and against the washer.
8. Install the first-speed gear (Fig. 13) on the mainshaft with the snap ring up. Engage the splines of the gear with the splines of the spacer.
9. With the snap ring down, install the second-speed gear on the mainshaft and against the first-speed gear.
10. Install the second-speed gear spacer and washer on the mainshaft, with the flat sides down. Move the key upward through the slot in the second-speed gear washer until it reaches the second groove from the top of the mainshaft.
11. Align the keyway in the second-third-speed sliding clutch with the key, and position the clutch on the mainshaft.
12. Install the third-speed gear washer (flat side up) in the second groove from the top of the mainshaft. Then, move the key upward to engage the washer.
13. Install the third-speed spacer with the flat side against the washer.
14. Install the third-speed gear (snap ring up) on the shaft and onto the splines of the spacer.
15. With the snap ring down, install the fourth-speed gear (Fig. 13) on the mainshaft and against the third-speed gear.
16. With the flat side up, install the fourth-speed gear spacer into the fourth-speed gear hub.
17. Install the fourth-speed gear washer (flat side down) on the mainshaft, and move the key upward to engage the washer.
18. Install the fourth-fifth speed sliding clutch gear, aligning the large slot in the clutch gear with the keyway in the shaft.
19. Remove the mainshaft assembly from the vise and align the snap ring groove in the key with the second from the end snap ring groove in the mainshaft.
20. Install the reverse gear on the mainshaft and move it as far forward as possible into engagement with the sliding clutch gear. **Do not install the reverse gear spacer and snap ring until the mainshaft assembly is installed in the transmission.**
21. Install the front mainshaft snap ring

on the mainshaft and key, securing the key to the mainshaft.

INPUT SHAFT

Disassembly

1. Mount the shaft in a soft-jawed vise. Relieve the peening on the bearing nut, and remove the nut. **It has a left thread.**
2. Using the rear face of the input shaft gear as a base, mount the assembly in a press, and press the shaft through the gear. This will free the bearings, spacer, and gear from the shaft.

Assembly

1. Install the snap ring in the drive gear if it was removed (Fig. 14).
2. Install the drive gear on the shaft with the snap ring toward the front.
3. Install the drive gear spacer.
4. Press the drive gear bearing on the shaft, with the snap ring toward the front.
5. Install the bearing attaching nut, and torque to specifications. This nut has a left-hand thread. Peen the nut at the slots milled into the shaft.

COUNTERSHAFT

Disassembly

Both countershafts are identical, except for the number of teeth on the PTO gears; thus, they are disassembled in the same manner.

1. Remove the snap ring from the rear of the countershaft.
2. Using the rear face of the reverse gear as a base, press the gear from the countershaft (Fig. 15).
3. Using the second-speed gear as a base, press the first and second-speed gears from the countershaft (Fig. 16).
4. Using the fifth-speed gear as a base, press the countershaft out of the third, fourth, PTO, and fifth-speed gears (Fig. 17).
5. Remove the three keys and spacer from the countershaft.

Assembly

Except for the number of teeth on the PTO gears, the countershafts are identical and assembled in the same manner.

1. Install the front washer over the rear of the countershaft and position the keys in the keyways (Fig. 18).
2. Press the countershaft gears on the shaft **one at a time; the drive, PTO, third and first-speed gears are installed with the long hubs to the rear. The fourth, second, and reverse-speed gears are installed with the long hubs to the front (Fig. 18). The left countershaft is equipped with a 47 tooth PTO gear; the right side is equipped with a 45 tooth gear. After installing the PTO gear on the countershaft, mark the assembly either left or right to correspond with the installed PTO gear.**
3. Install the snap ring on the rear of the countershaft.

GEAR SHIFT HOUSING

Disassembly

1. Tilt the housing and remove the tension springs and balls from the bores in the top of the housing.
2. Set the housing in a vise with the plunger side up.
3. Cut the lock wires, and remove the lock screws from each shifter shaft prior to its removal.
4. Move the top and center shifter shafts to the rear and out of the housing. Remove the shifting fork and block from each shaft. As the neutral detent in the center shaft clears the housing boss, remove the interlock pin (Fig. 19).
5. Remove the actuating plunger from the bore in the housing (Fig. 19).
6. Move the lower shifter shaft to the rear and out of the housing. Remove the shifting fork from the shaft. **Do not lose the interlock balls as the lower shaft is removed.**

Assembly

Install the shifter shaft through the rear bores of the housing with the neutral and detent notches to the rear. Keep the shafts in the neutral position when installed.

1. Place the housing in a vise with the plunger side up.
2. Install the first and reverse-speed shifter shaft in the bottom bore and through the shifting fork. Install the set screw and secure with lock wire.
3. Install the actuating plunger in the front opening of the housing, and a three-quarter inch interlock ball in the rear opening (Fig. 20).
4. Position the second and third-speed shifter shaft in the center bore and through the shift block and fork. **Be sure to install the interlock pin in the bore at the neutral notch. Install the set screws and secure with lock wire. Keep the shifter shaft so that the interlock pin remains in a vertical position during the remainder of the assembly. Rotating the shaft will cause the interlock pin to jam into the tension spring bores.**
5. Install a three-quarter inch ball in the rear opening of the housing.
6. Position the fourth and fifth-speed shifter shaft in the upper bore and through the shifting block and fork. Install the set screws and secure with lock wire (Fig. 21).
7. Remove the gear shift housing from the vise and place it on a work bench. Install the three detent balls and springs into the top of the housing.

AUXILIARY TRANSMISSION

SEPARATION OF MAIN AND AUXILIARY SECTIONS

1. Disconnect the air hoses at the air valve.
2. Remove the air filter and air regulator valve assemblies.
3. Remove the four bolts securing the air valve to the adapter plate and remove the valve.
4. Remove the alignment sleeve, spring, and actuating pin from the air valve adapter plate. Then, remove the plate from the transmission.
5. With the transmission in neutral, remove the gear shift housing cover.
6. Lock the transmission in two gears and remove the U-joint flange.
7. Remove the bolts that attach the auxiliary section to the transmission case. Install three puller screws in he tapped holes of the rear plate and tighten them alternately and evenly to move the auxiliary section to the rear just far enough to break the gasket seal.
8. Attach a chain hoist to the auxiliary section and continue to move it to the rear until free of the transmission (Fig. 22).
9. Remove the bolts and nuts that attach the clutch housing to the transmission and remove the housing.

JOINING OF MAIN AND AUXILIARY SECTIONS

1. Position the clutch housing to the transmission case, and install the attaching bolts and nuts. Torque the bolts and nuts to specifications.
2. Using a chain hoist, position the auxiliary section to the transmission. It may be necessary to rotate the drive gear to properly mesh the gears. Install the attaching bolts and tighten them securely.
3. With the transmission locked in two gears, install the speedometer drive gear and U-joint flange on the mainshaft. Torque the nut to specifications. **If the speedometer drive gear is not used, be sure to install a replacement spacer of the same width.**
4. Position the gear shaft housing cover

to the transmission and install the attaching bolts.
5. Install the air valve plate and housing.
6. Install the air filter and air regulator valve assemblies, and connect the air hoses at the air valve.

DISASSEMBLY OF AUXILIARY SECTION

1. Remove the shift cylinder cover bolts and remove the cover.
2. Remove the nut from the end of the shifter shaft. Using puller screws, remove the piston from the shift cylinder.
3. Remove the bolts that attach the shift cylinder housing to the rear plate.
4. Cut the lock wires and remove the set screws from the shifting fork. If necessary, rotate the shift cylinder housing to expose the set screws (Fig. 23).
5. Push the shifter shaft to the inside, through the fork hub, and out of the cylinder housing. Remove the shifting fork and shift cylinder housing from the plate.
6. If necessary, remove the O-rings from the piston and shift cylinder housing.
7. To remove the countershaft assemblies, place the rear plate on wood blocks so that the front of the countershafts are approximately two inches from the work bench. Also, **place blocking under the synchronizer assembly to prevent it from moving. If the synchronizer moves downward and off the mainshaft, the springs will be forcibly ejected from the synchronizer.**
8. Remove the bolts that attach the countershaft rear bearing covers to the plate. Remove the covers.
9. Cut the lock wires and remove the rear bearing retainer plate bolts. Remove the plate from each countershaft.
10. Using a hammer and a soft drift, tap the rear of the countershafts to unseat them from the bearings.
11. Remove the countershaft bearings by tapping lightly on the outer race with a soft mallet.
12. Pull the synchronizer assembly from the output shaft as a complete unit.
13. Reposition the rear plate on the wood blocks so that the threaded end of the output shaft is pointed upward.
14. Using a hammer and a soft drift, drive the output shaft through the rear bearing.
15. Remove the bolts that attach the rear bearing cover to the rear plate. Remove the cover. Remove the oil seal from the cover if it appears to be damaged.
16. Remove the bearing, two bearing cups, and the outer spacer from the plate bore.

ASSEMBLY OF AUXILIARY SECTION

1. With the rear plate on a work bench, place the front cup (taper to the inside) of the rear bearing into the rear bore of the plate.
2. Place the bearing outer spacer on the front cup.
3. Place the rear cup on the spacer and tap the two cups and spacer into the rear plate bore.
4. Place the rear plate over the output shaft. Be sure that the bearing on the shaft is seated on the rear plate front bearing cup.
5. Install the rear bearing on the output shaft.
6. Install a new oil seal in the rear bearing cover if it was removed. Position the cover to the rear plate and install the attaching bolts, using a star washer at the hole which intersects with the speedometer bore.
7. Install the synchronizer assembly on the output shaft, with the low-speed synchronizer ring toward the low-speed gear.
8. To install and time the auxiliary countershafts, mark the gear tooth which is stamped O on the small diameter low range gear of each countershaft. This tooth will be aligned with the keyway in the countershaft drive gear. These two teeth one on each countershaft, must both mesh at the same time with the output shaft low-speed gear and be in directly opposite positions.
9. Mark any two adjacent teeth on the output shaft low-speed gear. Then, mark the two adjacent teeth, which are directly opposite the first set marked. There should be the same number of teeth between the markings on each side of the gear.
10. Place the rear plate assembly on blocking, with the threaded end of the output shaft up. Make sure blocking is also placed under the synchronizer assembly to prevent it from dropping from the output shaft.
11. Place each countershaft into position and place blocking under each shaft. For correct timing, be sure to place the marked teeth of the countershafts into mesh with the marked teeth of the low-speed gear.
12. Install the rear bearing on each countershaft. Recheck the gears to be sure that they are correctly timed.
13. Position a rear bearing retainer plate on each countershaft and secure them with the attaching bolts and lock wire. Install the rear bearing covers.
14. Install a new O-ring in the shift cylinder bore if it was removed.
15. Position the shifting fork on the sliding clutch gear, and install the shift cylinder into the bore of the rear plate.
16. Insert the threaded end of the shifter shaft through the front of the shift cylinder, through the shifting fork hub, and into the cylinder bore. Install the set screws and secure them with lock wire.
17. Install new O-rings on the shift cylinder piston if they were removed.
18. Position the piston in the shift cylinder bore and secure with the elastic stop nut. Torque the nut to specifications.
19. Position the cover on the shift cylinder (air port to the upper left) and secure with the attaching bolts.

AUXILIARY SECTION SUB-ASSEMBLIES

COUNTERSHAFT

Disassembly

1. To remove the countershaft gear, remove the snap ring and press the gear from each shaft (Fig. 24). (Some units may have the drive gear welded to countershaft and cannot be disassembled).
2. Remove the key from each countershaft.

Assembly

1. Install a Woodruff key on each countershaft and press the countershaft onto each drive gear.
2. Install the snap ring on the front of each countershaft.

SYNCHRONIZER

Disassembly

1. Place the synchronizer assembly on a work bench. Remove the direct (high range) cone synchronizer ring from the pins of the low-speed synchronizer ring. **Place a cloth over the ring during removal to catch the three springs installed in the bores of the direct cone synchronizer.**
2. Remove the sliding clutch gear from

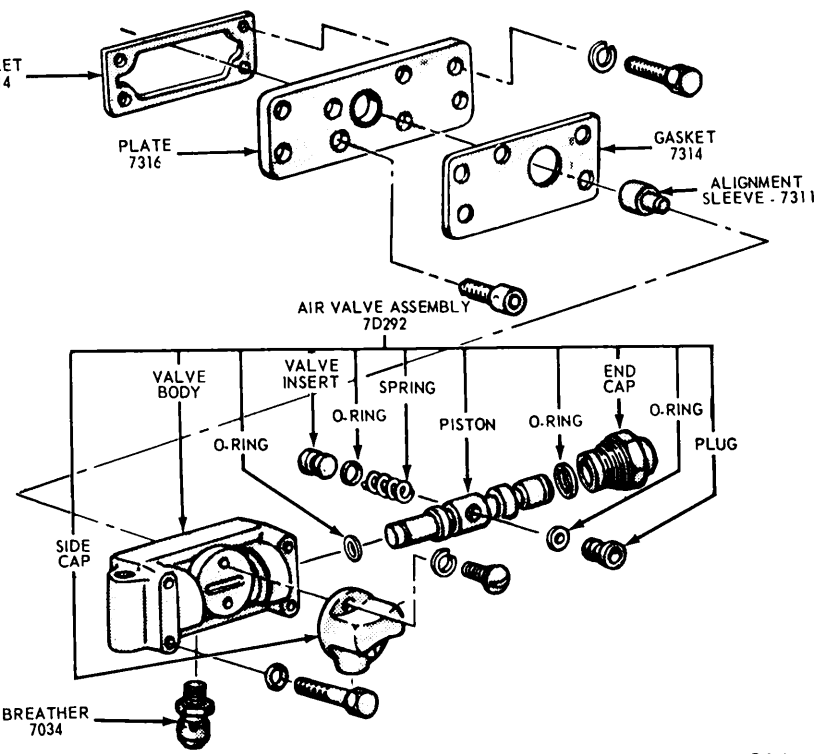

FIG. 5 Air Valve Disassembled

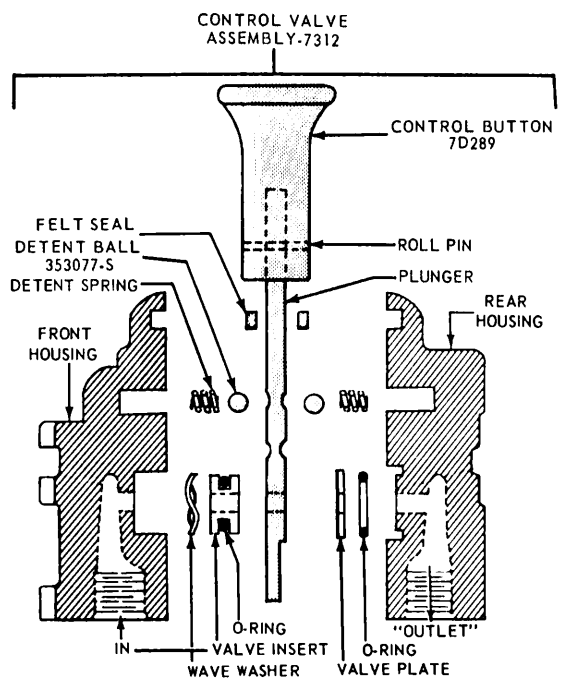

FIG. 6 Master Control Valve Disassembled

the pins of the low-speed synchronizer.

Assembly

1. Place the low-speed synchronizer ring on a work bench with the pins up. Then, install the clutch sliding gear on the pins.
2. Install the three springs into the bores of the direct synchronizer ring (Fig. 25) and place the direct synchronizer over the pins of the low-speed synchronizer ring.
3. Apply pressure to the direct synchronizer ring to compress the springs and fully seat the direct synchronizer on the pins of the low-speed synchronizer.

OUTPUT SHAFT

Disassembly

1. Remove the inner bearing spacer from the output shaft (Fig. 26).
2. Using the front face of the low-speed gear as a base, press the shaft through the gear, washers, and bearing.
3. Remove the splined and stepped washers from the shaft.

Assembly

1. Set the output shaft on a work bench with the threaded end up. Install the stepped and splined washers on the shaft (Fig. 26). Be sure the small diameters are toward the threaded end of the shaft.
2. Install the low-speed gear on the shaft, with the flat side up. hen, install the cone-shaped washer, with the flat side against the gear.
3. Install the bearing on the shaft, with the taper toward the threaded end.
4. Install the inner bearing spacer on the shaft and against the bearing.

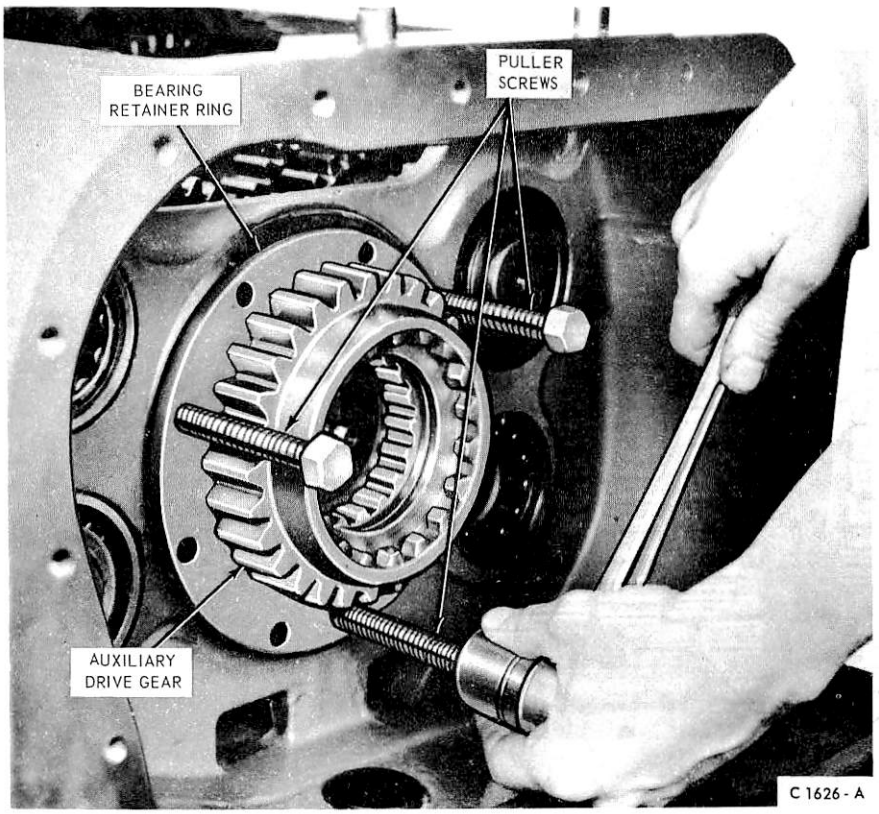

FIG. 7 Removing Auxiliary Drive Gear

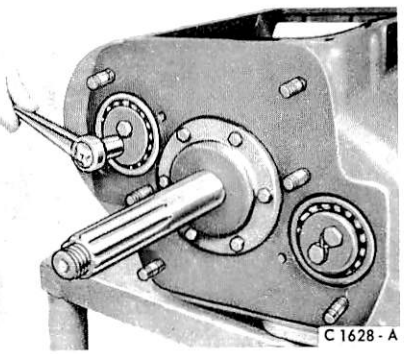

FIG. 9 Removing Right Countershaft Bearing Retainer Plate

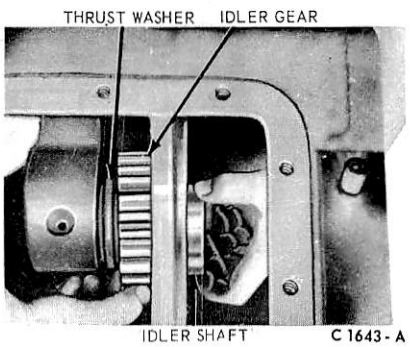

FIG. 10 Installing Right Reverse Idler Shaft

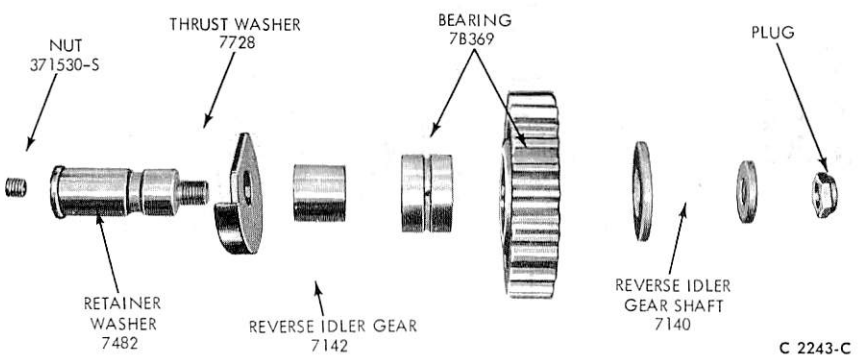

FIG. 8 Reverse Idler Gear Assembly—*Disassembled*

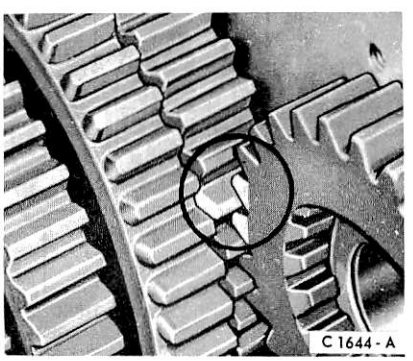

FIG. 11 Countershaft and Input Drive Gears in Mesh

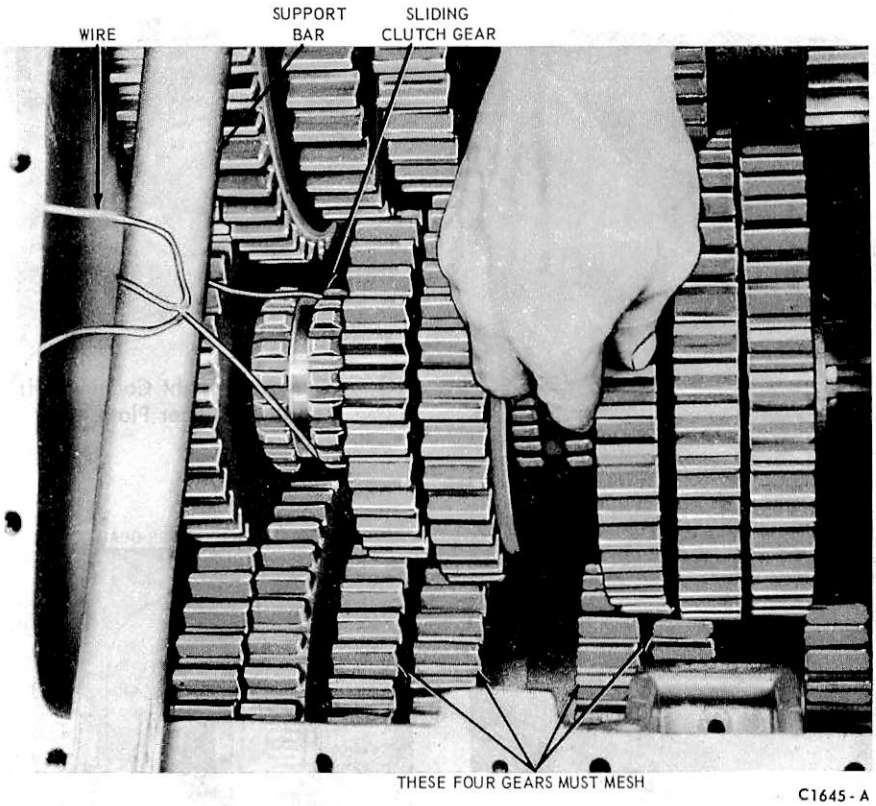

FIG. 12 Aligning Mainshaft and Countershaft Gears

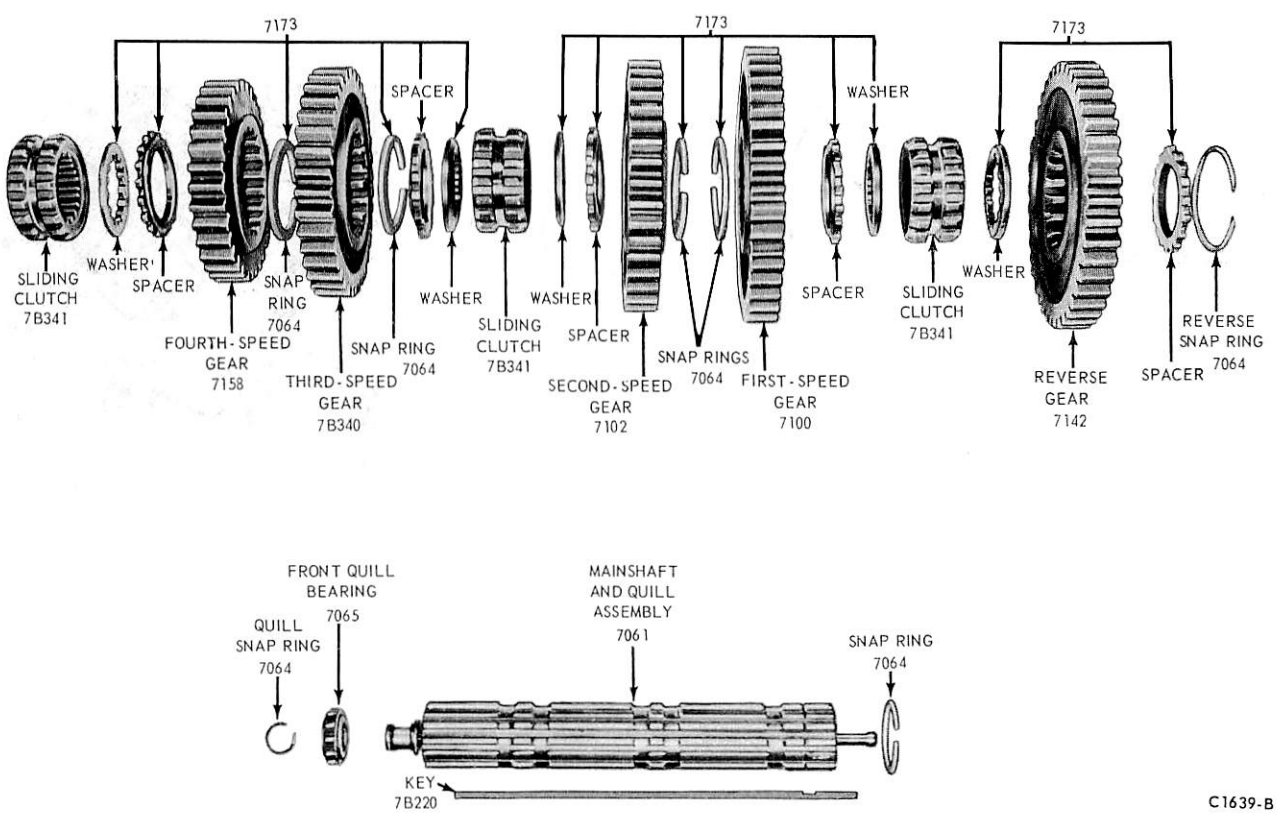

FIG. 13 Mainshaft Disassembled

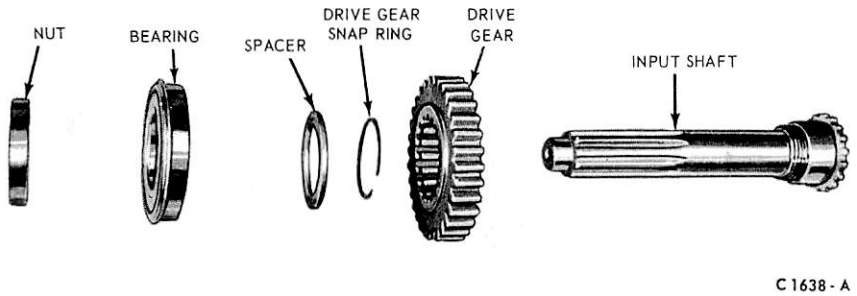

FIG. 14 Main Transmission Input Shaft Disassembled

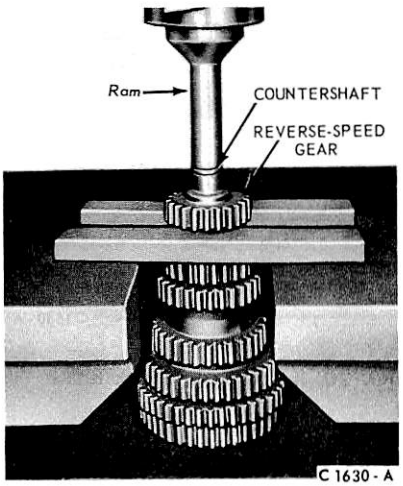

FIG. 15 Removing Reverse Gear

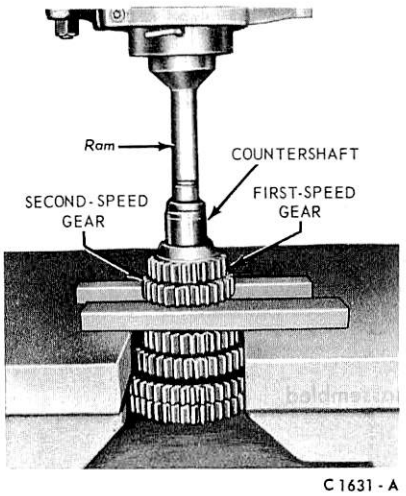

FIG. 16 Removing First and Second-Speed Gears

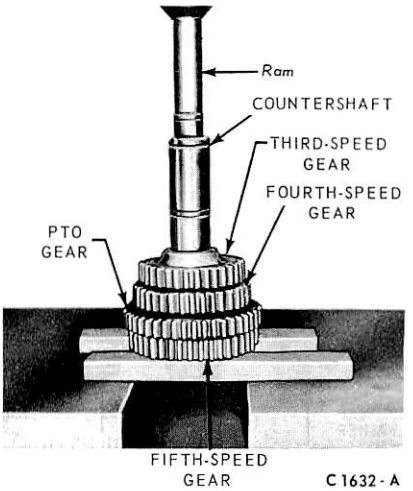

FIG. 17 Removing Third, Fourth, PTO, and Fifth-Speed Gears

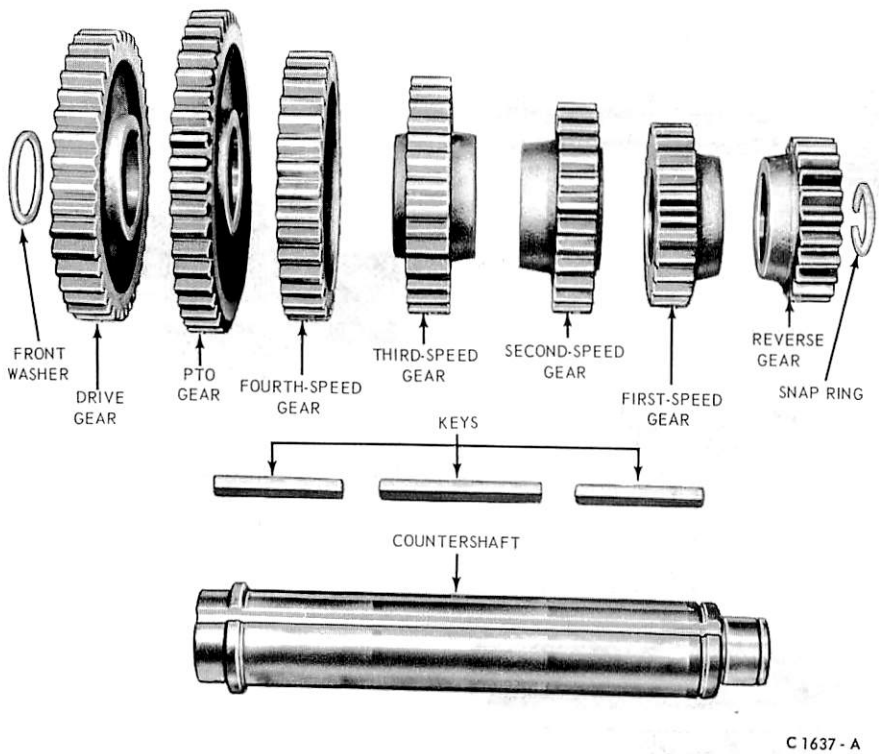

FIG. 18 Main Transmission Countershaft Disassembled

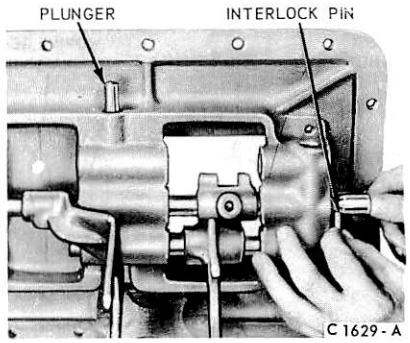

FIG. 19 Removing Interlock Pin

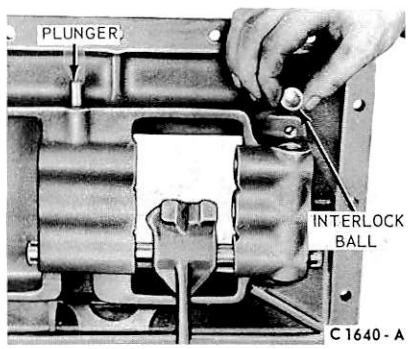

FIG. 20 Installing Interlock Ball

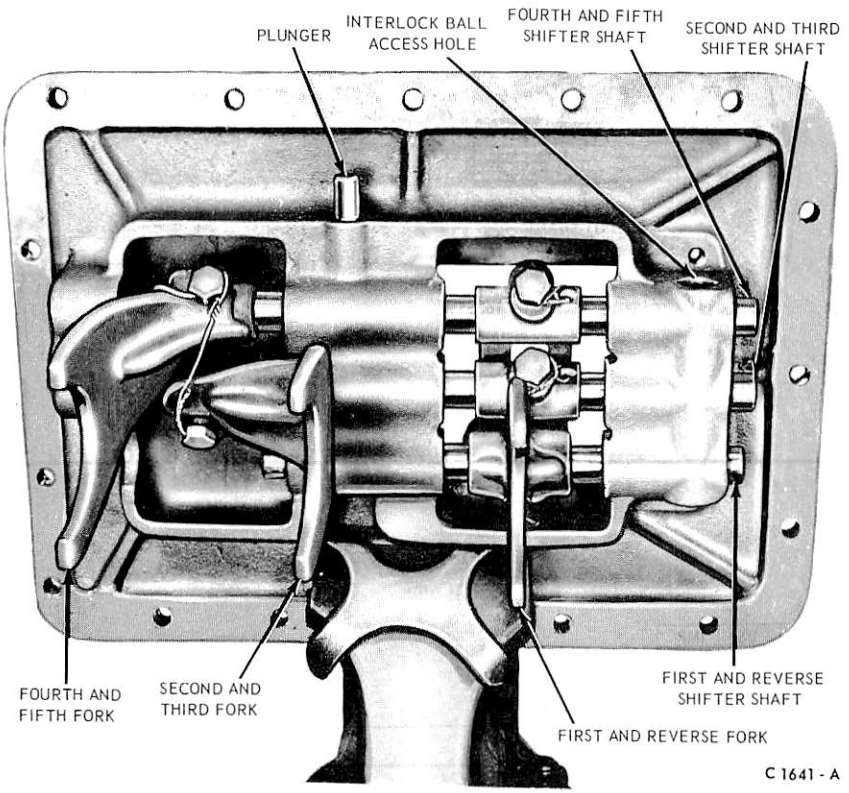

FIG. 21 Gear Shift Housing Assembled

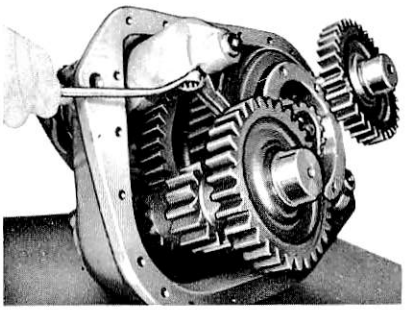

FIG. 23 Removing Lock Screws from Shifting Yoke

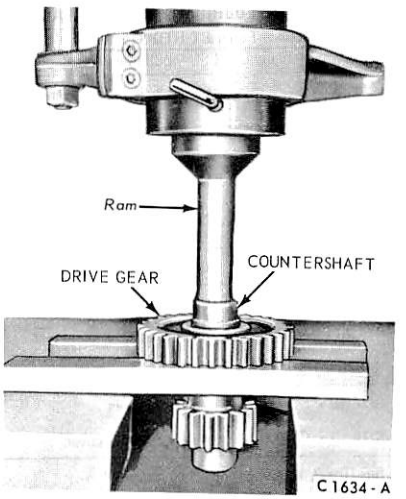

FIG. 24 Removing Auxiliary Countershaft Drive Gear

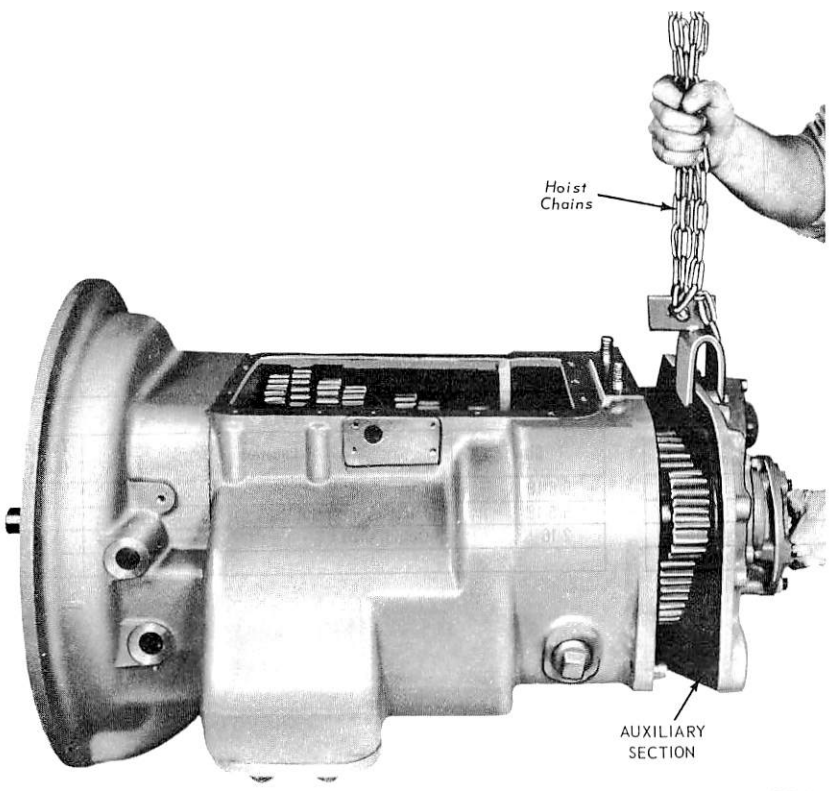

FIG. 22 Separating Auxiliary Section

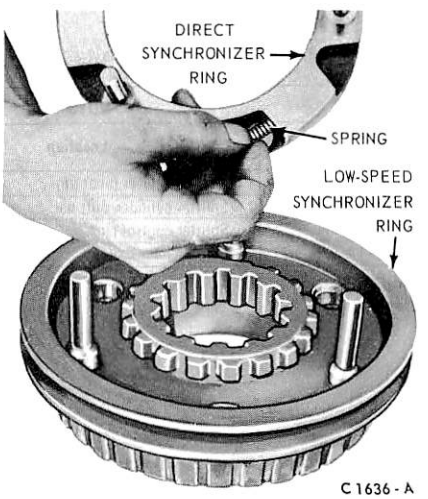

FIG. 25 Installing Synchronizer Springs

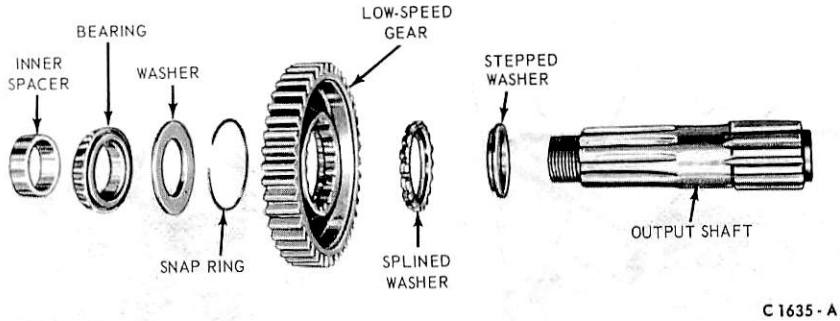

FIG. 26 Auxilixary Section Output Shaft

SPECIFICATIONS

APPROXIMATE LUBRICANT REFILL CAPACITY (PINTS)

Transmission—Fuller RT-RTO-910	US	IMP
SAE 50 Engine Oil (ESE-M2C39-A)	26	21.75

TORQUE LIMITS

BOLTS		
Size	**Location**	**Torque-Rating (Foot-Pounds)**
1/4-20 x 1/2	Air filter to bracket	10-15
1/4-20 x 5/8	Air valve adapter plate	15-20
1/4-20 x 7/8	Air valve adapter plate rear	
1/4-20 x 1-3/4	Air valve	
5/16-18 x 1/2	Hand hole cover	23-35
5/16-18 x 1-1/2	Splitter cylinder cover	
3/8-16 x 3/4	PTO cover, small	35-45
3/8-16 x 3/4	Air filter bracket to case	
3/8-16 x 1	Auxiliary drive gear bearing retainer	
3/8-16 x 1-1/2	Auxiliary housing	
3/8-16 x 1-1/4	Front bearing cover	
3/8-16 x 1-1/4	Shift bar housing	
3/8-16 x 1-1/4	Auxiliary housing	

NUTS		
Size	**Location**	**Torque-Rating (Foot-Pounds)**
5/8-24	Gear shift lever pivot pin	15-20
7/16-20	Splitter cylinder shift bar	20-25
5/8-11	Splitter control jam	60-65
5/8-18	Reverse idler shaft	75-80

TORQUE LIMITS

BOLTS		
Size	**Location**	**Torque-Rating (Foot-Pounds)**
3/8-16 x 1-1/4	Gear shift lever housing	35-45
3/8-16 x 1-1/4	Auxiliary countershaft rear bearing covers	
3/8-16 x 1-1/4	Auxiliary range shift cylinder	
3/8-16 x 1-1/4	Auxiliary range shift cylinder cover	
3/8-16 x 1-3/4	Shift bar housing	
3/8-16 x 2	Auxiliary housing	
3/8-16 x 2-3/4	Rear bearing cover	
7/16-14 x 1-1/4	PTO Cover, large	50-65
1/2-13 x 1-1/2	Clutch housing	70-75
1/2-13 x 3-1/2	Clutch housing	
1/2-20 x 1	Countershaft front bearing retainers	50-65
1/2-20 x 1	Auxiliary countershaft rear bearing retainers	
1/2-20 x 2	Range shift yoke	

NUTS		
Size	**Location**	**Torque-Rating (Foot-Pounds)**
5/8-18	Case	170-185
5/8-18	Range cylinder shift bar	70-80
2-16	Output shaft	450-500

CC 1066-B

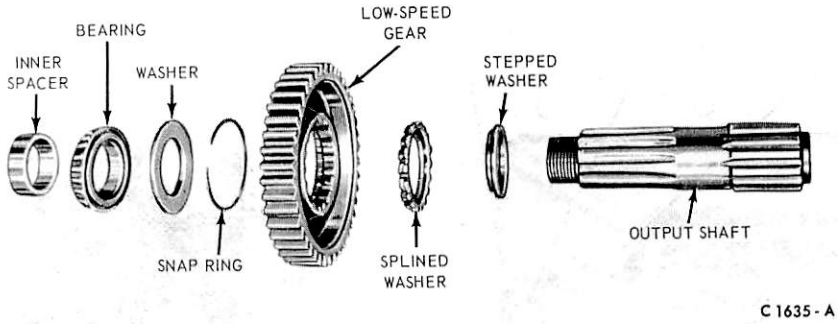

FIG. 26 Auxilixary Section Output Shaft

SPECIFICATIONS

APPROXIMATE LUBRICANT REFILL CAPACITY (PINTS)

Transmission–Fuller RT-RTO-910	US	IMP
SAE 50 Engine Oil (ESE-M2C39-A)	26	21.75

TORQUE LIMITS

BOLTS		
Size	**Location**	**Torque-Rating (Foot-Pounds)**
1/4-20 x 1/2	Air filter to bracket	10-15
1/4-20 x 5/8	Air valve adapter plate	15-20
1/4-20 x 7/8	Air valve adapter plate rear	
1/4-20 x 1-3/4	Air valve	
5/16-18 x 1/2	Hand hole cover	23-35
5/16-18 x 1-1/2	Splitter cylinder cover	
3/8-16 x 3/4	PTO cover, small	35-45
3/8-16 x 3/4	Air filter bracket to case	
3/8-16 x 1	Auxiliary drive gear bearing retainer	
3/8-16 x 1-1/2	Auxiliary housing	
3/8-16 x 1-1/4	Front bearing cover	
3/8-16 x 1-1/4	Shift bar housing	
3/8-16 x 1-1/4	Auxiliary housing	

NUTS		
Size	**Location**	**Torque-Rating (Foot-Pounds)**
5/8-24	Gear shift lever pivot pin	15-20
7/16-20	Splitter cylinder shift bar	20-25
5/8-11	Splitter control jam	60-65
5/8-18	Reverse idler shaft	75-80

TORQUE LIMITS

BOLTS		
Size	**Location**	**Torque-Rating (Foot-Pounds)**
3/8-16 x 1-1/4	Gear shift lever housing	35-45
3/8-16 x 1-1/4	Auxiliary countershaft rear bearing covers	
3/8-16 x 1-1/4	Auxiliary range shift cylinder	
3/8-16 x 1-1/4	Auxiliary range shift cylinder cover	
3/8-16 x 1-3/4	Shift bar housing	
3/8-16 x 2	Auxiliary housing	
3/8-16 x 2-3/4	Rear bearing cover	
7/16-14 x 1-1/4	PTO Cover, large	50-65
1/2-13 x 1-1/2	Clutch housing	70-75
1/2-13 x 3-1/2	Clutch housing	
1/2-20 x 1	Countershaft front bearing retainers	50-65
1/2-20 x 1	Auxiliary countershaft rear bearing retainers	
1/2-20 x 2	Range shift yoke	

NUTS		
Size	**Location**	**Torque-Rating (Foot-Pounds)**
5/8-18	Case	170-185
5/8-18	Range cylinder shift bar	70-80
2-16	Output shaft	450-500

CC 1066-B

PART 16-62 Fuller RTO and RTOF-9513 Thirteen-Speed Transmissions

Applies to L, LN, LNT, LT, LTS, W and WT 9000

COMPONENT INDEX	Page
AIR SHIFT CONTROLS	
Air Regulator and Filter	
Disassembly and Assembly	62-03
Removal and Installation	62-03
Air Valve	
Disassembly and Assembly	62-05
Removal and Installation	62-02
Splitter Control Valve	
Disassembly and Assembly	62-05
Removal and Installation	62-03
AUXILIARY SECTION	
Disassembly and Assembly	62-09
Removal and Installation	62-08
MAIN TRANSMISSION	
Description	62-01
Disassembly and Assembly	62-05
Removal and Installation	62-03
MAIN TRANSMISSION SUB-ASSEMBLIES	
Clutch Housing	
Removal and Installation	62-04
Countershafts	
Disassembly and Assembly	62-07
Drive Gear	
Disassembly and Assembly	62-07
Gear Shift Housing	
Disassembly and Assembly	62-05
Removal and Installation	62-02
Mainshaft	
Disassembly and Assembly	62-06
Shifting Bar Housing	
Disassembly and Assembly	62-08
Removal and Installation	62-04
SPECIFICATIONS	

DESCRIPTION

TRANSMISSION

The RTO and RTOF-9513 series transmissions are designed for medium to heavy duty vehicles, for both on-highway or off-highway use.

The twin countershaft design, which splits torque evenly between the two countershafts, provides a high torque capacity to weight ratio. Because of torque splitting, each gear set carries only half of the load, greatly reducing the face width of each gear.

Another unique design feature is the floating gear principle. The mainshaft gears when not engaged float between the countershaft gears, eliminating the need for gear sleeves and bushings. All gears are constant mesh and have spur type teeth.

These transmissions have 13 progressive forward ratios and two reverse, consisting of a five-speed front section, a sychronized two-speed range section and an over-drive splitter gear (Fig. 1). One ratio in the front section is used only in low range as a low-low or starting gear. The remaining four ratios in the front section are used once through the reduction (low) gear in the range section and once through direct (high) in the range section.

While in high range, the four ratios can be split by the over-drive splitter to give eight speeds in high range. All 13 ratios are progressively spaced. Ratios are never split while the transmission is in low range.

The shifts between low and high range are made automatically by air upon pre-selection by the driver. The splitter gear is engaged by air when selected by the driver.

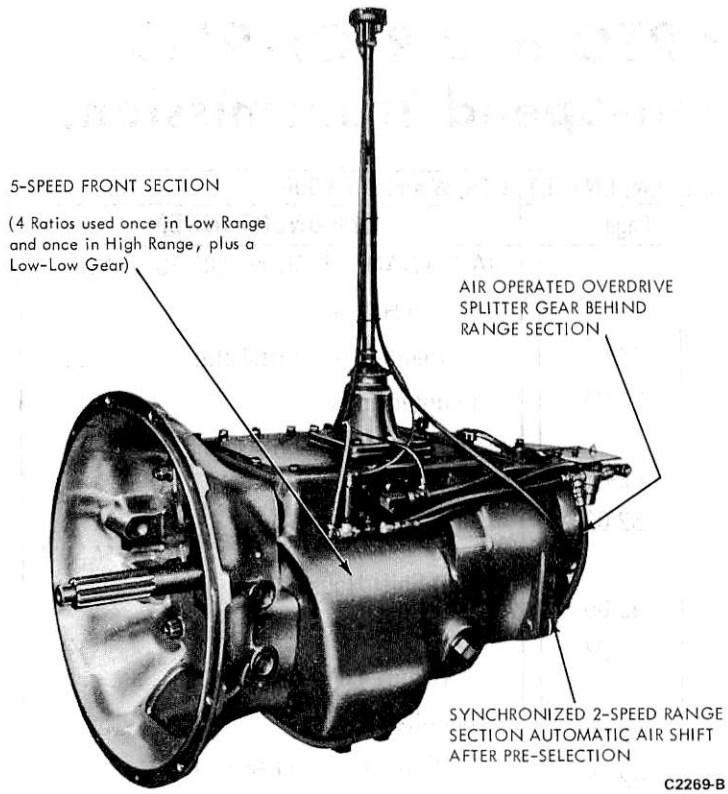

FIG. 1 RTO-9513 Transmission

REMOVAL AND INSTALLATION

GEAR SHIFT LEVER HOUSING

Removal

Turn out the four capscrews and lift the gear shift lever housing or remote control housing from the shifting bar housing.

Installation

1. Make sure the shifting notches on bars in housing are aligned in the neutral position.
2. Install the gear shift lever housing on shifting bar housing, fitting lower end of lever into notches in shifting blocks and yoke.
3. Install the attaching capscrews, tighten evenly and securely.

AIR SHIFT CONTROLS

AIR VALVE

Removal

1. Remove the floor mat and the floor plate.
2. Place the gear shift lever in the neutral position. Drain the air from the system.
3. Disconnect and remove air lines from the range shift air cylinder at rear of transmission.
4. If necessary, remove fittings from range shift cylinder.
5. Turn out the four capscrews and remove the air valve from adapter plate (Fig. 2).
6. Remove the alignment sleeve from air valve or from bore in adapter plate.
7. Remove the spring and actuating pin from bore in adapter plate.
8. Turn out the two capscrews and the two Allen head screws and remove the adapter plate from transmission.
9. If necessary, remove fittings from air valve.

Installation

1. Place the gear shift lever in the neutral position. The lever must remain in this position until air pressure has been admitted to the system.
2. Apply air pressure to the front port of the air valve to move the pistons to the rear. **Failure to perform these two steps may result in damage to the valve.**
3. Install the adapter plate on transmission to align large bore in plate with bore in transmission. Secure with two capscrews in bores at rear of plate and with two nylon Allen head screws in counterbored holes. Use loctite on nylon screws.

Use the small alignment sleeve to check plate bore alignment with case bore. If not properly aligned, loosen capscrews and Allen head screws and reposition adapter plate.

4. Install the actuating pin in bore in adapter plate and install the spring on actuating pin.
5. **Before installing alignment sleeve, check bore in which it is to be installed to make sure the stop piston in air valve is either in a forward or rear position.** Install the alignment sleeve in bore in air valve.
6. Install the air valve on adapter plate, tighten capscrews evenly and securely.
7. Install fittings in shift cylinder if previously removed.

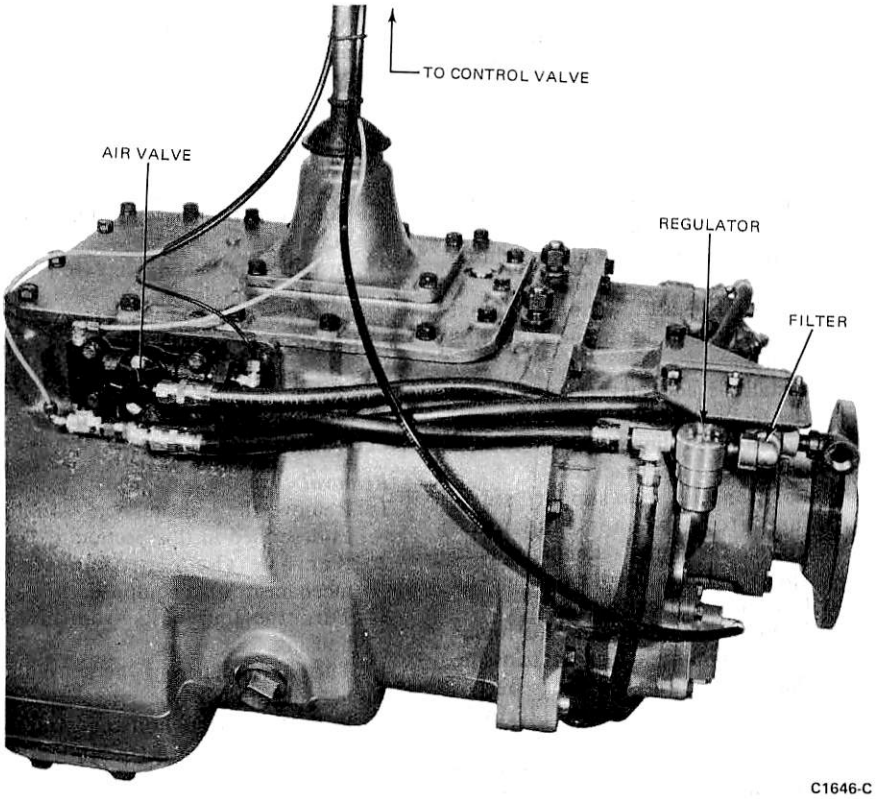

FIG. 2 Transmission Air System

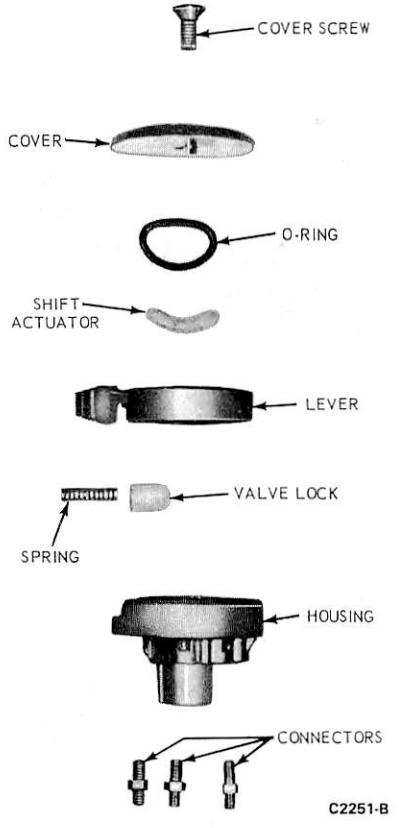

FIG. 3 Range and Splitter Control Disassembled

RANGE AND SPLITTER CONTROL VALVE

Removal

1. Disconnect the three control air lines; at valve cover in rear of transmission and at air valve on side of transmission (Fig. 2).
2. Disconnect air lines from control valve on gear shift lever (Fig. 3).
3. Loosen jam nut and turn the control valve from lever. Remove jam nut.
4. Remove the control valve air lines and sheathing from lever.

Installation

1. Install 1/4 inch ID air line between tee in regulator and side air port in the splitter shift cylinder cover. This is the constant air supply for operation of the splitter shift cylinder.
2. Install O-ring on gear shift lever. Install the splitter control jam nut on threads of gear shift lever.
3. Install three fittings, 1/16 inch pipe thread, in splitter control. Install in **S** port which is the supply port, and in the **F** port which is the signal line to the air port, and in the **R** port which is the signal line to the splitter cylinder.
4. Install the splitter control on threads of gear shift lever and secure with jam nut. Install with trademark toward the front.
5. Install black 1/8 inch OD, .078 inch ID nylon air line in **F** port of control valve. Install white 1/8 inch OD, .078 inch ID nylon air line in **S** port of control valve. Install black line in **R** port.
6. Measure air lines for proper length. Measure sheathing for proper length: approximately 44 inches. Cut small hole in side of sheathing approximately 24 inches from end which is to be used as upper or top portion.
7. Thread white line and one black line through top portion of sheathing and out small hole cut in sheathing; thread one black line through entire length of sheathing.
8. Thread air lines and sheathing through O-rings on gear shift lever.
9. Connect the black line from **R** port to the 90 degree ell in rear air port in the splitter shift cylinder cover at rear of transmission.
10. Connect the black air line from **F** port to the pilot end of air valve.
11. Connect the white nylon line to supply port of air valve.

AIR REGULATOR AND FILTER

Removal

1. Disconnect and remove air line between the air regulator and splitter cylinder cover.
2. Disconnect and remove the air lines from air valve on side of transmission.
3. Turn out the two capscrews which attach the filter bracket to transmission and remove the filter, regulator and air line from transmission (Fig. 4).

Installation

1. Install nipple in output port of air filter.
2. Install air regulator on nipple.
3. Install regulator and filter on mounting bracket with clamp.
4. Install nipple and tee in regulator.
5. Install the air filter and regulator bracket on auxiliary housing.
6. Install 1/4 inch ID air line between bottom port of tee in air regulator and supply port in splitter cylinder.
7. Install 1/4 inch air line between regulator and air valve supply port. Install 1/4 inch air line between rear port in side cap of air valve and range shift cylinder cover. Install 1/4 inch air line between air valve and range cylinder.

TRANSMISSION ASSEMBLY

Removal

1. Bleed the air reservoirs. Disconnect the air line at the top right side of the transmission.

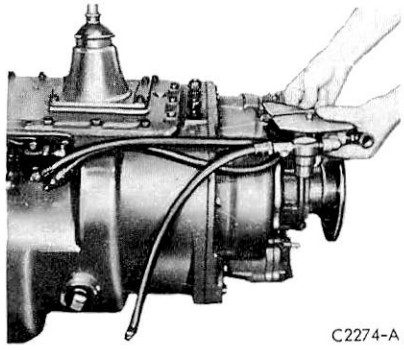

FIG. 4 Removing Air Regulator and Filter

2. Disconnect the drive shaft at the parking brake drum and disconnect the speedometer cable.
3. After cleaning the area around the cross-shaft housing, remove the housing and tie it out of the way. Cover the opening in the gear shift housing.
4. Remove the shift control cable retaining clamp and disconnect the cable at the air shift valve. Remove the two clevis pins securing the air shift cylinder (necessary for clearance of the transmission jack).
5. Disconnect the clutch release lever retracting spring. Remove the slave cylinder mounting bolts and position the slave cylinder out of the way.
6. Remove all but two of the clutch housing attaching bolts at the engine.
7. After securing a transmission jack to the transmission, raise the transmission slightly to relieve pressure at the side rail mounting brackets.
8. Disconnect the parking brake rod clevis and both air line clamps (on the side rail brackets).
9. Remove the side rail bracket stud nuts, insulators and reinforcements; then remove each bracket.
10. After removing the remaining clutch housing retaining bolts, pull the transmission rearward to clear the input shaft.
11. Raise the front of the vehicle enough to provide clearance in removing the transmission. Install safety stands and remove the transmission from the vehicle.

Installation

1. Install two pilot studs in the clutch housing and remove the clutch housing dust cover.
2. Position the transmission under the truck. Lower the truck.
3. Position the input shaft in the clutch discs and start two of the transmission retaining bolts.
4. Torque all transmission-to-clutch housing bolts to specification.
5. Install the clutch housing dust cover, slave cylinder and retracting spring.
6. Install the side rail brackets. Torque the mounting bolts to specification. Install the air line retaining brackets on the side rail brackets.
7. Position the rear support studs, insulators, washers and nuts. Torque the upper retaining nuts to specification and remove the transmission jack.
8. If necessary, loosen the lower retaining nuts and lock nut to assure that the transmission hangs freely.
9. Insert a feeler gauge (0.125 inch) between the lower retaining nut and its washer. **Do not apply pressure to the engine or the stud shoulder. Turn the nut downward until there is slight pressure on the gauge.**
10. Repeat steps 8 and 9 for the other side.
11. Torque the lock nuts to specification.
12. Install the air shift cylinder, connect the air shift cable and install the cable clamp.
13. Install the cross-shaft housing and torque the mounting bolts to specification.
14. Connect the speedometer cable, the brake rod and the air line.
15. Start the engine to build up air pressure, connect the drive shaft and check for air leaks.

SUB-ASSEMBLIES

SHIFTING BAR HOUSING

Removal

With gear shift lever housing removed, turn out the attaching capscrews, jar to break gasket seal and lift the shifting bar housing from transmission.

Installation

1. Make sure the shifting bar housing assembly is in the neutral position.
2. Make sure the sliding clutch gears on the mainshaft are in the neutral position.
3. Install the shifting bar housing on transmission, fitting yokes into yoke slots of corresponding sliding clutch gears.
4. Install the attaching capscrews and tighten securely.
5. Install gear shift lever housing.

If breather is not used at left front bore in top of housing, make sure this opening is plugged.

CLUTCH HOUSING

Removal

1. Remove the transmission assembly as described in this Section.
2. Remove the clutch release mechanism if so equipped.
3. Turn the four bolts from clutch housing.
4. Turn the nuts from the six clutch housing studs.
5. Pull the clutch housing straight forward and off case. It will be necessary to break gasket seal by jarring housing lightly with soft hammer. The clutch housing is piloted on the drive gear bearing cover.

Installation

1. Install the front bearing cover, tighten capscrews securely.
2. Install the clutch housing on the six studs on front of case. Move evenly against case as drive gear bearing cover pilots the clutch housing on case.
3. Install lock washers and nuts on studs and install the four bolts in housing.
4. Secure the nuts on studs with 180 to 190 ft-lbs of torque.
5. Secure the bolts with 90-100 ft-lbs of torque.
6. Install the clutch release mechanism if so equipped.
7. Install the transmission assembly in the vehicle.

DISASSEMBLY AND ASSEMBLY

GEAR SHIFT LEVER HOUSING

Disassembly

1. Remove the rubber dust protector from gear shift lever.
2. Mount the assembly in a vise with the large opening up.
3. Free the gear shift lever tension spring by twisting a heavy screwdriver between the spring and housing, forcing the spring from its seat under lugs case in housing.
4. Remove the tension spring from housing.
5. Withdraw the tension spring washer and gear shift lever out through bottom of housing.
6. Remove the nut and lock washer from outer end of gear shift lever pivot pin (Fig. 5).
7. Remove pivot pin by forcing it inward and through wall of housing.

Assembly

1. Install the pivot pin in bore in housing, thread end outward.
2. Install the lock washer and nut on pivot pin.
3. Mount the housing in a soft-jawed vise with the large, bottom opening upwards.
4. Insert the gear shift lever in housing, fitting slot in pivot ball of shift lever on pivot pin.
5. Install the tension spring washer in housing.
6. Install the tension spring in housing, seating spring under lugs cast inside the housing.
7. Remove from vise and install the rubber dust protector over the gear shift lever and against neck of housing.

AIR SHIFT CONTROLS

AIR VALVE

Disassembly

1. Remove all air line fittings and the vent from the valve.
2. Remove the two screws securing the side cap to the valve body and remove the cap (Fig. 6).
3. Remove the valve insert and spring from the piston. Remove the O-ring from the valve insert.
4. Remove the end cap and piston from the valve body. Remove the two O-rings from the piston.
5. Remove the nylon plug from the piston and remove the O-ring from the plug.

Assembly

1. Use all new O-rings and lubricate them with a thin film of vaseline before installing them.
2. Install O-rings on the piston and nylon plug. Install the plug in the piston (Fig. 6).
3. Insert the piston in the valve body and install the end cap. Tighten the cap securely.
4. Install the spring into the piston.
5. Install an O-ring on the valve insert and install it in the piston.
6. Secure the side cap to the valve body with the attaching screws and lock washers. Tighten the screws securely.
7. Coat the fittings with sealer and install them in their respective ports. Install the vent in the body.

RANGE AND SPLITTER CONTROL VALVE

Disassembly

The control valve is easily disassembled by removing the top plate screw (Fig. 3).

Assembly

Reassemble the splitter control valve as shown in Figure 3. Critical assembly factors are:

1. Make sure jam nut locking control valve to the gear shift lever is secure.
2. Make sure that top plate screw is torqued with 90 to 120 in-lbs. A loose top plate screw can affect valve operation.
3. When assembling, lubricate O-ring and O-ring carrier with a barium base grease.

MAIN TRANSMISSION

Refer to Auxiliary Transmission Section for instructions on separating the main and auxiliary sections of the transmission.

Disassembly

1. Remove the mainshaft rear coupling snap ring from groove in mainshaft, located inside bore of drive gear.
2. Cut lock wire and remove the six capscrews which attach the bearing retainer ring to case.
3. Insert three puller screws in tapped holes in retainer ring and tighten evenly to pull assembly from case bore (Fig. 7).
4. Secure gear in vise and remove snap ring from auxiliary drive gear.
5. Press, or use driver, to remove the bearing retainer ring and bearing from the auxiliary drive gear.

To remove the left reverse idler gear, the reverse gear on the mainshaft must be moved forward to provide the necessary clearance; this procedure is included in the following instructions.

6. Move the mainshaft reverse gear to the rear as far as possible and remove the snap ring from ID of gear.
7. Move the mainshaft reverse gear forward and against the low-speed gear and into engagement with the sliding clutch gear.
8. Remove auxiliary countershaft front bearing from reverse idler bore.
9. Inside the case, turn the elastic stop nut from threads of the reverse idler shaft and remove the washer.
10. Remove the plug from bore of reverse shaft.
11. Insert impact puller (1/2-13 thread) and remove the reverse idler shaft. This will unseat the countershaft front bearing of the auxiliary section from case bore.
12. As the reverse idler shaft is moved to the rear, remove the thrust washer and gear from shaft and case.
13. If necessary, remove the bearing inner race which is a slip fit from the reverse idler shaft.
14. If necessary, press bearing from bore of reverse idler gear.
15. Remove cup from bore.

In order to remove the mainshaft assembly, it will be necessary to remove bearings from right countershaft. This procedure is included in the following instructions.

16. Remove the bearing retaining snap ring from groove at rear of the right countershaft.
17. Using blunt punch with care from inside of case, move the countershaft rear bearing to the rear and from shaft.
18. Cut lock wire, turn out the two capscrews and remove the bearing retainer plate from front of right countershaft.
19. Move the right countershaft to the rear approximately 1/2 inch, using soft bar and maul against front of countershaft.

Use soft bar with large, flat end to prevent damage to retainer plate capscrew holes in front of countershaft.

20. Move the countershaft assembly forward as far as possible to expose front bearing snap ring. Use puller or pry bars to remove front bearing.
21. Block the right countershaft toward case wall, as far forward as possible.

22. With the mainshaft reverse gear against the first-speed gear, pull the mainshaft to the rear and lift the assembly from case.
23. Remove snap ring from groove at rear of left countershaft.
24. Using blunt punch with care from inside of case, move the countershaft rear bearing to the rear and from shaft.
25. Cut lock wire, turn out the two capscrews and remove the bearing retainer plate from front of countershaft.
26. Move the countershaft to the rear approximately 1/2 inch, using soft bar and maul against front of countershaft. This will partially unseat front bearing from shaft. **Use soft bar with large, flat end to prevent damage to retainer plate capscrew holes in front of countershaft.**
27. Move the countershaft forward until front bearing snap ring is exposed.
28. Pull or pry the front bearing from shaft.
29. Turn out capscrews from the front bearing cover.
30. From inside the case move the drive gear forward, removing the cover as drive gear bearing is moved forward. Use soft bar and hammer to move drive gear (Fig. 8).
31. Remove the snap ring from the drive gear bearing.
32. Move the drive gear assembly to the rear and into inside of case and remove the case, working past the countershaft gears.
33. Move the front of the right countershaft towards center of case and upwards and remove from case.
34. Move the front of the left countershaft towards center of case and upwards and remove from case.
35. Repeat steps 6 through 12 to remove the right reverse idler assembly (Fig. 9).

Assembly

Before starting the reassembly, check to make sure all three magnetic discs are in place in bottom of case.

1. Install plug in threaded bore in end of reverse idler shaft.
2. Press the needle bearing in bore of the reverse idler gear if previously removed. Install cup on shaft.
3. Install the inner race of bearing on the reverse idler shaft if previously removed (Fig. 9).
4. Insert the thread end of shaft through the lower, right wall of case.
5. As shaft is moved forward, install the thrust washer and reverse idler gear on shaft, seating gear on inner race of bearing. Washer is positioned between gear and boss on inside of case.
6. Seat shaft securely in bore. **Make sure needle bearings are located on inner race of bearing before moving the shaft forward.**
7. Install washer over thread end of shaft.
8. Install elastic stop nut on shaft. Install auxiliary countershaft front bearings in reverse idler bores.
9. On the drive gear of each countershaft, mark the gear tooth which aligns with the keyway in shaft. This tooth will be stamped with an O (Fig. 10).
10. Place the left countershaft into position in case, but do not install bearings. **Make sure the left countershaft assembly has the larger 47-tooth PTO gear.**
11. Place the right countershaft into position in case, but do not install bearings. **Make sure the right countershaft assembly has the 45-tooth PTO gear. Countershafts will now be in approximate position but without bearings.**
12. Mark any two adjacent gear teeth on the drive gear. Then mark the two adjacent teeth which are directly opposite the first set marked. There should be the same number of teeth between the marking on each side of the gear.
13. Make sure snap ring is removed from the drive gear bearing.
14. Insert the drive gear shaft from inside the case through front bore and move as far forward as possible so as to expose snap ring groove in bearing. It will be necessary to work the drive gear past the PTO gears on countershafts.
15. Install snap ring in groove in drive gear bearing.
16. Use block to center rear of left countershaft in the case bore.
17. Mesh the marked tooth on left countershaft drive gear with two marked teeth on the main drive gear.
18. Start the front bearing in case bore. Center countershaft assembly and install front bearing on shaft and into case bore.
19. Remove block at rear of shaft and install the countershaft rear bearing on shaft and into case bore.
20. Install the bearing retainer plate on front of countershaft, tighten and wire the two capscrews securely.
21. Install the snap ring in groove at rear of countershaft.
22. Block the right countershaft assembly towards wall of case as far as possible to provide clearance for the installation of mainshaft.
23. With the reverse gear as far forward as possible on the mainshaft, lower rear of mainshaft into case and through rear bearing bore.
24. Lower front of mainshaft into position and move forward to seat in pocket of drive gear; at the same time meshing mainshaft gears with corresponding gears on left countershaft.
25. Move the right countershaft to mesh gears with corresponding gears on mainshaft, and at the same time mesh marked tooth on the countershaft drive gear with the two marked teeth on the main drive gear.
26. Use blocking to center rear of right countershaft in case bore and to center rear of mainshaft in rear bearing bore.
27. Start the front bearing in case bore. Center countershaft assembly and install the front bearing on shaft and into case bore.
28. Remove block at rear of countershaft and install the countershaft rear bearing on shaft and into case bore.
29. Install the bearing retainer plate on front of countershaft, tighten and wire the two capscrews securely.
30. Install snap ring in groove at rear of countershaft.
31. Repeat steps 1 through 8 to install the left reverse idler gear assembly.
32. Move the reverse gear as far as possible to the rear, against rear wall of case, and mesh teeth with those of the reverse idler gears.
33. Install snap ring in groove in ID of reverse gear.
34. Move reverse gear forward on shaft and into correct position.
35. Place the bearing retainer ring on auxiliary drive gear.
36. Press the bearing on drive gear, snap ring towards retainer.
37. Install snap ring in groove in shoulder of auxiliary drive gear.
38. Install the auxiliary drive gear assembly into rear case bore, fitting over rear of mainshaft and seating bearing in case bore. Align gap in ID of gear with key in mainshaft.
39. Install the six capscrews which attach the retainer ring to case. Wire capscrews in groups of three.
40. Pull the mainshaft as far to the rear as possible and install the rear mainshaft coupling snap ring in groove in mainshaft located inside bore of drive gear.

MAIN TRANSMISSION SUB-ASSEMBLIES

MAINSHAFT

Disassembly

1. Remove the third-fourth speed sliding clutch gear from mainshaft.

2. Remove the mainshaft front coupling snap ring from rear of mainshaft.
3. Pull the long key, located between splines of mainshaft, to the rear and from mainshaft.
4. Remove reverse gear spacer and washer.
5. Remove reverse gear and first-reverse sliding clutch.

When removing washers, spacers and gears, note their location to facilitate the reassembly of the mainshaft (Fig. 11). Keep washers and spacers with the gear from which they were removed; there is one spacer and one washer for each gear. The spacers have external splines and the washers have internal splines.

6. Work washers, spacers and gears from mainshaft. It will be necessary to turn washers, located under each gear, to align with splines of mainshaft.
7. If necessary, remove snap rings from groove in ID of each gear.

Assembly

1. Mount the mainshaft in a vise with the front end up. Keep keyway clear for the insertion of the long key.
2. Install snap ring in groove in ID of all mainshaft gears except the reverse gear.
3. Install the reverse gear washer on mainshaft in the fifth radial groove from the top. Turn square slot in ID of washer to align with keyway in shaft. Install with flat side down. **For reference purposes, the gear washers are internally splined and contain a square keyway. The gear spacers are externally splined to engage splines of gears. There is one washer and one spacer for each gear.**
4. From the bottom, install the long key in keyway in mainshaft so that forward end is moved through slot in the reverse gear washer. Keep snap ring groove in key to the rear and to the outside. **The key is to be moved upwards to engage each washer as it is placed on mainshaft.**
5. Install the low low-reverse speed sliding clutch gear on mainshaft, aligning large slot in ID of gear with key in shaft.
6. Install the low low-speed gear washer, flat side up, on mainshaft in the fourth radial groove from top. Turn square slot in ID of washer to align with keyway in shaft.
7. Move the key upwards through slot in low low-speed gear washer until front of key is level with the third radial groove from top.
8. Install the low low-speed gear spacer, flat side down, on mainshaft and against the washer.
9. Install the low low-speed gear, snap ring up, on mainshaft, engaging splines of gear with splines of spacer.
10. Install the first-speed gear, snap ring down, on mainshaft and against the low low-speed gear.
11. Install the first-speed gear spacer, flat side up, on mainshaft, engaging splines of gear with splines of spacer.
12. Install the first-speed gear washer, flat side down, on mainshaft and against the first-speed spacer.
13. Turn the first-speed gear washer until square slot in ID aligns with keyway of mainshaft.
14. Move key upwards to engage the first-speed gear washer and continue to move key until it reaches the second radial groove from top in mainshaft.
15. Install the first-second speed sliding clutch on mainshaft, aligning large slot in ID of clutch gear with key in shaft.
16. Install the second-speed gear washer on mainshaft and in second radial groove from top in mainshaft.
17. Turn washer until square slot in ID aligns with keyway of mainshaft and move key upward to engage washer. Install washer with flat side up.
18. Install the second-speed gear spacer on mainshaft, flat side against washer.
19. Install the second-speed gear, snap ring up, on mainshaft, engaging splines of gear with splines of spacer.
20. Install the third-speed gear, snap ring down, on mainshaft and against the second-speed gear.
21. Install the third-speed gear spacer on mainshaft, flat side up, engaging splines of gear with splines of spacer.
22. Install the third-speed gear washer on mainshaft, flat side towards spacer.
23. Align slot in ID of washer with keyway in shaft and move the key upwards to engage the third-speed gear washer.
24. Install the third-fourth speed sliding clutch gear, aligning large slot in clutch gear with keyway in shaft (Fig. 12).
25. Remove the assembly from vise and move the long key until the snap ring groove in key aligns with the 2nd snap ring groove from end in mainshaft.
26. Install the reverse gear, snap ring groove to the rear, on rear of mainshaft and move as far forward as possible into engagement with sliding clutch gear.
27. Install the reverse gear spacer over end of mainshaft, flat side against washer.
28. Install the front mainshaft coupling snap ring on mainshaft and key, securing key to mainshaft at 2nd snap ring groove from end in mainshaft.

DRIVE GEAR

Disassembly

1. Relieve the drive gear bearing nut at points where it is peened into milled slots of shaft (Fig. 13).
2. Turn the drive gear bearing nut from shaft, **left-hand thread.**
3. Using the rear face of the drive gear as a base, mount the assembly in a press, and press the shaft through the gear to unseat bearing, spacer and drive gear from shaft.
4. If necessary, remove the snap ring from ID of drive gear.

Assembly

1. Install snap ring in groove in ID of drive gear.
2. Install the drive gear on shaft, engaging internal splines of gear with teeth on shaft, snap ring of gear towards the front.
3. Install the drive gear spacer on shaft and against snap ring.
4. Press the drive gear bearing on shaft, shield to the front.
5. Apply Loctite to threads of shaft and nut.
6. Install the bearing nut on shaft, lefthand thread, with 250-300 ft-lbs. of torque. Wipe off excess Loctite.
7. Peen the nut into the two milled slots of shaft. To hasten the hardening of Loctite, place the assembly under heat lamps 10 to 15 minutes.

COUNTERSHAFTS

Disassembly

Both countershafts are identical, except for the number of teeth on the PTO gears; thus they are disassembled in the same manner.

1. Press the second, third, PTO and fourth-speed gears from countershaft. This will require a press of at least 25-ton capacity. Use metal shield on press as safety precaution (Fig. 14). The reverse speed gear and the low-low gear are integral with countershaft.
2. Press the first speed gear from countershaft.
3. Remove the long key from countershaft if necessary.
4. Remove the Woodruff key from countershaft if necessary.
5. Remove pin from countershaft if necessary.

Assembly

Except for the number of teeth on the power take-off gears, the countershafts are identical and assembled in the same manner.

1. Install the Woodruff key in countershaft (Fig. 15).
2. If previously removed, install pin in bore in keyway of countershaft.
3. Install the key in countershaft.
4. Press the first speed gear on countershaft, long hub to the front (Fig. 16).
5. Align keyway in gear with keys in shaft and press the second-speed gear on countershaft, long hub to the rear (Fig. 17).
6. Press the third-speed gear on countershaft, long hub to the front (Fig. 18).
7. Press the power take-off gear on countershaft, bullet end of teeth to the rear (Fig. 19).
8. Press the fourth-speed gear (drive gear) on countershaft, long hub of gear to the rear (Fig. 20).
9. The left countershaft takes a 47tooth PTO gear, the right a 45-tooth PTO gear. After completing assembly of countershafts, mark assemblies wither left or right to correspond with PTO gear.

SHIFTING BAR HOUSING

Disassembly

Lay all parts on a clean bench in the order in which they are removed to facilitate reassembly. **Bars not being removed from housing must be kept in a neutral position or interlock parts will lock bars.**

1. Tilt housing and remove the tension springs and balls from bores in top of housing (Fig. 21).
2. Set the housing in a vise with the plunger side up.
3. Starting with the upper bar, move all bars to the rear and out of housing as detailed in the following instructions. Cut lock wire and remove lock screws from each bar just prior to its removal.
4. Move the upper shifting bar to the rear and from housing, removing the shift block and the shift yoke from bar.
5. Move the center bar to the rear and from housing, removing the shift block and the shift yoke from bar. As neutral notch in the shift bar clears the housing boss, remove the interlock pin from bore in neutral notch.
6. Remove the actuating plunger from bore in housing.
7. Move the lower bar to the rear and out of housing, removing the shift yoke from bar.
8. Two interlock balls will fall from interlock ball opening in rear boss of housing as last bar is removed.

Assembly

1. Install the housing in a vise with the short bar location at the bottom, rear of housing to the right.

Shifting bars are to be installed through the rear bores of housing with neutral and shift notches to the rear. Keep bars in the neutral position when installed.

2. Install the short low low-reverse shifting bar into housing in the lowest bore, installing the shifting yoke on bar.

If previously disassembled, install reverse stop plunger, spring and plug in bore until 1 1/2 to 2 threads protrude. Make sure plunger can fully depress into bore at yoke slot. Stake plug through small hole in yoke.

3. Install the yoke lock screw, tighten and wire securely.
4. Install the actuating plunger in bore in left side of housing, flat end outward.
5. Install 3/4 inch interlock ball in bore in rear boss. This ball rides between the low low-reverse shifting bar and the first-second speed shifting bar.
6. Install the first-second speed shifting bar through the center bore in housing, through the shifting block, the center boss and the shift yoke. Block is installed with the wire support to the rear; yoke is installed with fork to the rear. Install interlock pin in bore in neutral notch of bar as neutral notch enters rear boss in housing.

Keep bar so that interlock pin remains in a vertical position during the remainder of the assembly. Rotation of bar will allow interlock pin to jam into tension spring bores.

7. Install the block and yoke lock screws, tighten and wire securely.
8. Install the 3/4 inch interlock ball in bore in rear boss. This ball rides between the first-second speed shifting bar and the third-fourth speed shifting bar.
9. Install the third-fourth speed shifting bar in top bore of housing, through the shifting block, the center boss and the third-fourth speed shifting yoke, fork to the front.
10. Install the block and yoke lock screws, tighten and wire securely.
11. Remove shifting bar assembly from vise and place on work bench.
12. Install the three tension balls in bores in top of housing.
13. Install the three tension springs in bores in top of housing. The black spring is installed in the left bore (third-fourth shift bar). Red springs are installed in the other two bores.

AUXILIARY TRANSMISSION

SEPARATION OF MAIN AND AUXILIARY SECTIONS

1. With the transmission assembly removed from vehicle and air lines disconnected, turn out the capscrews which attach the auxiliary housing to the transmission case.
2. Install three puller screws in the tapped holes in housing and tighten evenly to move the auxiliary section to the rear to break gasket seal.
3. Attach chain hoist to housing to properly balance and to relieve the weight of the auxiliary section (Fig. 22).
4. Continue to move the auxiliary section to the rear until free of transmission. This assembly consists of the housing, the auxiliary countershafts, low speed gear, output shaft, shift cylinder and synchronizer assemblies, range mainshaft, splitter gear and sliding clutch. There is nothing to restrict the movement of the auxiliary except the two dowel pins in the rear flange of the case.

Transmission can also be set vertically to remove the auxiliary section. Block under clutch housing to prevent damage to drive gear shaft and lift the auxiliary upward and from transmission case.

JOINING OF MAIN AND AUXILIARY SECTIONS

1. Make sure the two dowel pins are in place in rear face of transmission. These are installed with the long taper protruding to the rear and the front of the pin flush with the front face of flange.
2. Place a chain hoist on auxiliary assembly to properly balance and hold its weight.
3. Move the auxiliary section evenly onto rear of transmission. the two countershaft drive gears will mesh with the auxiliary drive gear and front of countershafts will seat in the two bearings installed in front section. Move assembly evenly, rotating drive gear if necessary, to properly mesh gears.

Auxiliary section can also be installed by setting front section vertically on wood blocks and by lowering the auxiliary evenly on transmission.

4. Install the attaching capscrews and tighten securely.
5. Connect air lines and install transmission assembly in vehicle.

AUXILIARY SECTION

Disassembly

1. Remove the shift cylinder cover bolts and remove the cover.
2. Remove the nut from the end of the shifter shaft. Using air on low range port, remove the piston from the shift cylinder. **Do not stand in back of piston.**
3. Remove the bolts that attach the shift cylinder housing to the rear plate.
4. Cut the lock wires and remove the set screws from the shifting fork. If necessary, rotate the shift cylinder housing to expose the set screws (Fig. 23).
5. Push the shifter shaft to the inside, through the fork hub and out of the cylinder housing. Remove the shifting fork and shift cylinder housing from the plate.
6. If necessary, remove the O-rings from the piston and shift cylinder housing (Fig. 24).
7. To remove the countershaft assemblies, place the rear plate on wood blocks so that the front of the countershafts are approximately two inches from the work bench. Also, **place blocking under the synchronizer assembly to prevent it from moving.**

If the synchronizer moves downward and off the mainshaft, the springs will be forcibly ejected from the synchronizer.

8. Remove the bolts that attach the countershaft rear bearing covers to the plate. Remove the covers.
9. Remove snap rings from rear of each countershaft.
10. Using a hammer and a soft drift, tap the rear of the countershafts to unseat them from the bearings.
11. Use puller to remove bearings from shafts and bores.
12. Pull the synchronizer assembly from the output shaft as a complete unit.
13. Pull the direct (high range) cone synchronizer ring from pins of the low-speed synchronizer ring, covering with cloth to catch the blocker spring installed in bores of the direct cone synchronizer. Lay large low-speed ring on table and pull direct cone slowly upward.
14. Remove sliding clutch gear from pins of low-speed synchronizer.
15. Remove the key from keyway between splines of range mainshaft.
16. Turn splines of low-speed gear washer, located in hub of gear, to align with splines of shaft.
17. Remove the low-speed gear and splined washer from shaft.
18. Remove the clutching collar from shaft.
19. Remove the right countershaft from auxiliary housing.
20. Turn out capscrews and remove the splitter gear shift cylinder cover.
21. Cut lock wire and turn out lock screw from shifting yoke.
22. Pull shifting bar and piston out through rear of shift cylinder.
23. Remove O-ring from OD of piston if necessary.
24. Remove O-ring from small diameter at end of shifting bar if necessary.
25. Remove the shifting yoke from sliding clutch gear and withdraw the shift cylinder from housing.
26. Remove the left countershaft assembly.
27. With soft bar and maul, or with use of press, move the splitter gear and output shaft assembly forward and out of rear bearing.
28. Remove the bearing inner spacer from shaft.
29. Using the front face of the splitter gear as a base, press the tailshaft through the gear and front cone of bearing, freeing gear, washer and bearing cone (Fig. 25).
30. Remove splined thrust washer from gear and, if necessary, remove snap ring from gear.
31. Remove snap ring from front of quill.
32. Pull the range mainshaft from quill using the sliding clutch as a base for puller jaws. This will free range mainshaft and sliding clutch.
33. Remove the ball bearing and needle bearing from range mainshaft if necessary.
34. Remove snap ring from range mainshaft if necessary.
35. Turn out the attaching capscrews and the nut from stud on rear bearing cover.
36. Tap lightly to break gasket seal, and remove the rear bearing cover.
37. Remove oil seal from cover.
38. Remove the bearing rear cone from housing.
39. Push parts to the rear to remove the two cups and outer spacer of bearing from housing bore.

The auxiliary countershafts, drive gear and over-drive gear are one piece and cannot be disassembled. The two gears are welded to the shaft at the time of manufacture.

40. If necessary, remove bearing inner race from front of countershaft.

Assembly

For timing purposes, mark the tooth on each over-drive gear which is stamped with an O. Install inner race of bearing on front of countershafts.

The quill should not be removed from output shaft unless replacement of quill is necessary. If replaced, press quill into output shaft until shoulder seats squarely against shaft. Check shaft on centers; shaft should not be over .003 inch.

1. Install splitter gear sliding clutch on splines of output shaft, internal splines to the rear.
2. If previously removed, install the bushing in the range mainshaft 1/16 inch below face.
3. Install the snap ring in groove at end of splines in range mainshaft.
4. Install the range mainshaft on quill of output shaft.
5. Install the front ball bearing in range mainshaft and on quill. Seat with sleeve driver slightly larger than ID of bearing inner race.
6. Install snap ring in groove on front of quill.
7. Install snap ring in groove of splitter (over-drive) gear.
8. Mark any two adjacent gear teeth on the splitter gear. Then mark the two adjacent teeth which are directly opposite the first set marked (Fig. 26).
9. Install the splined washer on shaft and against shaft shoulder.
10. Install the splitter gear on splined washer, clutching teeth to the front.
11. Install the rear washer on output shaft, flat side to the rear.
12. Install the front cone of Timken bearing on shaft and against washer, taper towards the thread end. This is a matched bearing; make sure the correct cone and cup are matched. **Heating of bearing cones to install on output shaft is recommended, provided the bearing is not heated over 275 degrees F. Heat lamps are recommended for heating purposes.**
13. Install the bearing inner spacer on shaft and against the bearing cone.
14. Start the front cup of bearing into rear of bore in auxiliary housing, taper to the inside.
15. Place the bearing outer spacer on cup and place the rear cup of bearing on spacer, lip to the rear.
16. Tap the two cups and spacer lightly and evenly to seat in rear bore, seating lip on rear cup against housing.
17. Place the rear plate with assembled cups over output shaft.
18. Install heated bearing rear cone on shaft and into rear cup.
19. Install oil seal in rear bearing cover if previously removed. **Check rear bearing cover for speedometer bushing.**
20. Install the rear bearing cover on

center bore. Tighten capscrews securely. **Make sure that output shaft is to the rear as far as possible.**

21. Place the left countershaft into position, meshing marked timing tooth on over-drive gear with two marked teeth on the splitter gear. **Do not install rear bearing.**
22. Install O-ring in splitter cylinder shift bore.
23. Place the shift yoke fork in position in sliding clutch gear. Install the splitter shift cylinder into rear bore and place hub of shift yoke into position in cylinder with long hub to the front.
24. Install O-ring on OD of piston.
25. Install the shift bar from the rear into shift cylinder and through the yoke hub.
26. Install lock screw in yoke hub and secure with safety wire.
27. Install splitter insert valve in cover.
28. Install exhaust screw in cover to secure insert valve.
29. Install the splitter shift cylinder cover with the exhaust screw down and supply port to the right, tighten capscrews securely.
30. Place the right countershaft into position, meshing marked tooth on over-drive gear with two marked teeth on the splitter gear. **Do not install rear bearing.**
31. Install the splitter gear clutching collar on splines of range mainshaft against snap ring, clutching teeth to the rear.
32. Install the low range gear on range mainshaft and against clutching collar.
33. Install the splined washer on range mainshaft and into hub of low range gear. Align splines of washer with raised splines of shaft.
34. Lock the low range gear into position by inserting the range mainshaft key between splines of shaft and washer.
35. Place the larger low-speed synchronizer ring on work bench with pins upwards.
36. Install the sliding clutch gear on pins of the low-speed synchronizer, protruding clutching teeth down.
37. Install the three springs in bores in the direct synchronizer ring (Fig. 27).
38. Place the direct synchronizer ring over pins of the low range synchronizer ring, seating springs against pins.
39. Apply pressure to direct synchronizer ring so as to compress springs and seat pins of low-speed synchronizer fully into bores of direct synchronizer plate.

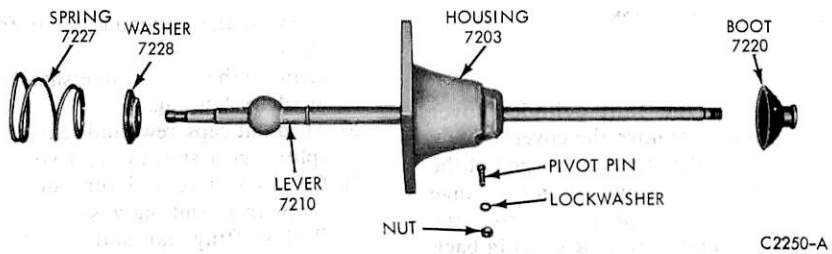

FIG. 5 Gear Shift Lever and Housing—Disassembled

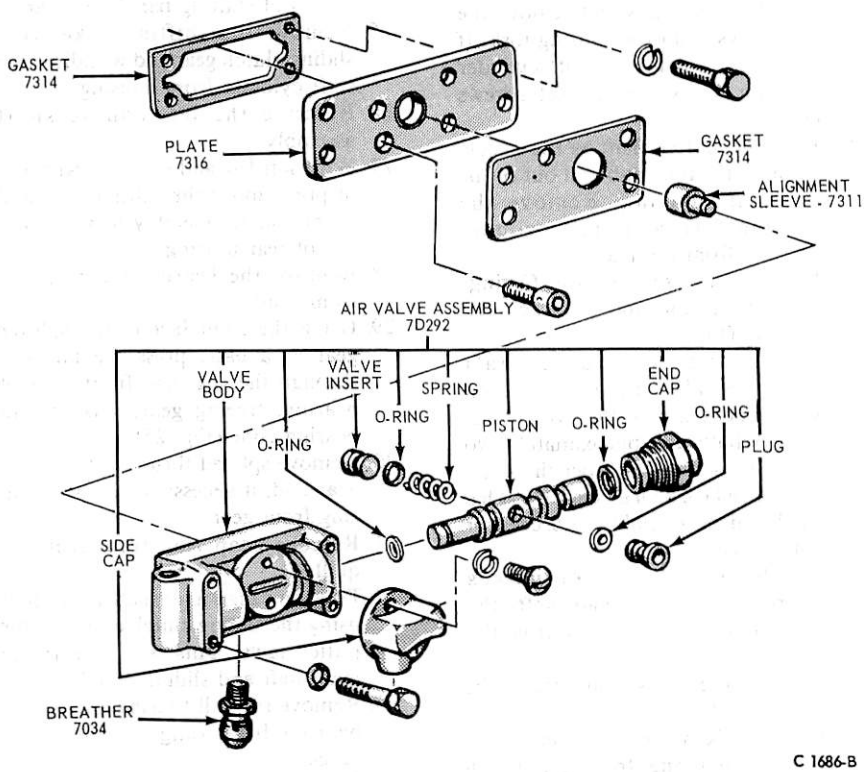

FIG. 6 Air Valve Disassembled

40. Spread the countershaft assemblies and place the assembled synchronizer assembly on the range mainshaft, fitting low range cone into mating cone on low range gear.
41. Set housing with front end of countershafts on bench. Center rear of countershafts in housing bores.

Make sure that marked timing teeth on countershaft over-drive gear are meshed with the marked timing teeth on splitter gear (Fig. 28).

42. Install rear bearings on shafts and into bores.
43. Install snap ring on rear of each countershaft.
44. Install rear bearing covers, tighten capscrews securely.
45. Install O-ring in bore of shift cylinder.
46. Install washer in bore of shift cylinder and against O-ring.
47. Install snap ring in bore of shift cylinder to secure washer.
48. Place the range shifting yoke into yoke slot of sliding clutch gear, long hub to the rear.
49. Install the shift cylinder through rear plate bore and place the hub of shifting yoke into position in shift cylinder housing (Fig. 29).
50. Insert thread end of shifting bar into shift cylinder from the front, through the yoke hub and into cylinder.
51. Align lock screw holes in yoke hub with slots in shifting bar and install yoke lock screws.
52. Install capscrews in shift cylinder and tighten securely.

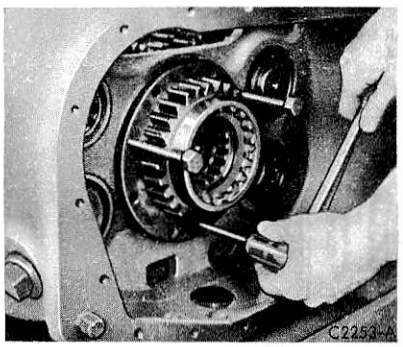

FIG. 7 Pulling Auxiliary Drive Gear Assembly from Case Bore

53. Install O-ring in ID of shifting bar piston.
54. Install O-ring on OD of piston.
55. Install piston into cylinder bore and on shifting bar, flat side outward.
56. Install the elastic stop nut on shifting bar, tighten securely.
57. If previously removed, install air line fitting in air cylinder port, 90 degrees ell facing toward center of transmission.
58. Install cover on shift cylinder, air port towards upper left.
59. If previously removed, install air line fitting in cover air cylinder port, 90 degrees ell facing toward center of transmission.

If a gasket is used which requires shellac or permatex, use only a very small amount to prevent clogging of cylinder air ports or damage to O-rings.

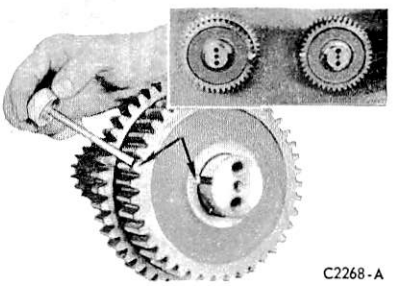

FIG. 10 Marking Tooth on Countershaft Drive Gear

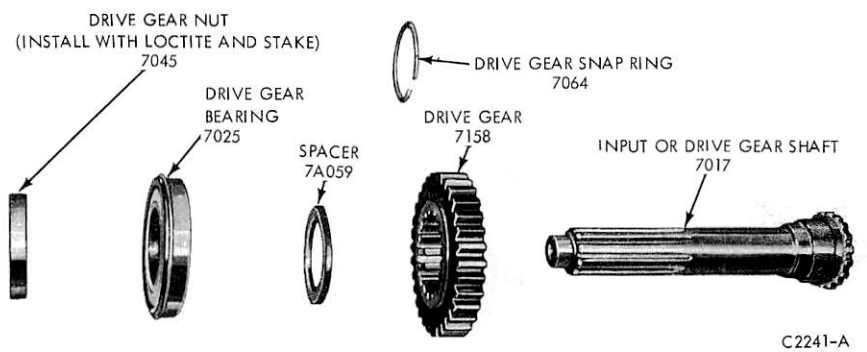

FIG. 8 Drive Gear Assembly—Disassembled

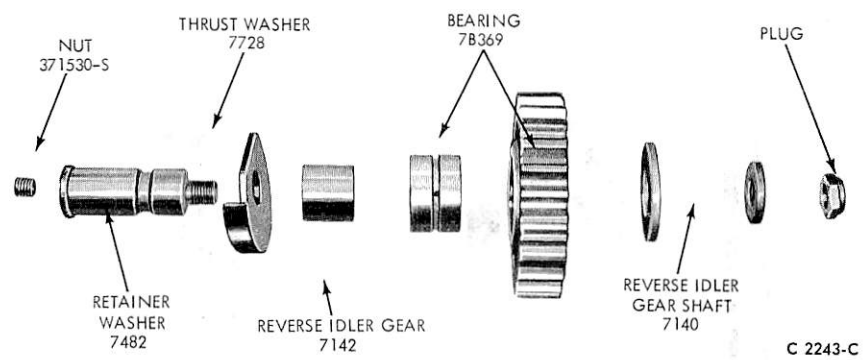

FIG. 9 Reverse Idler Gear Assembly—Disassembled

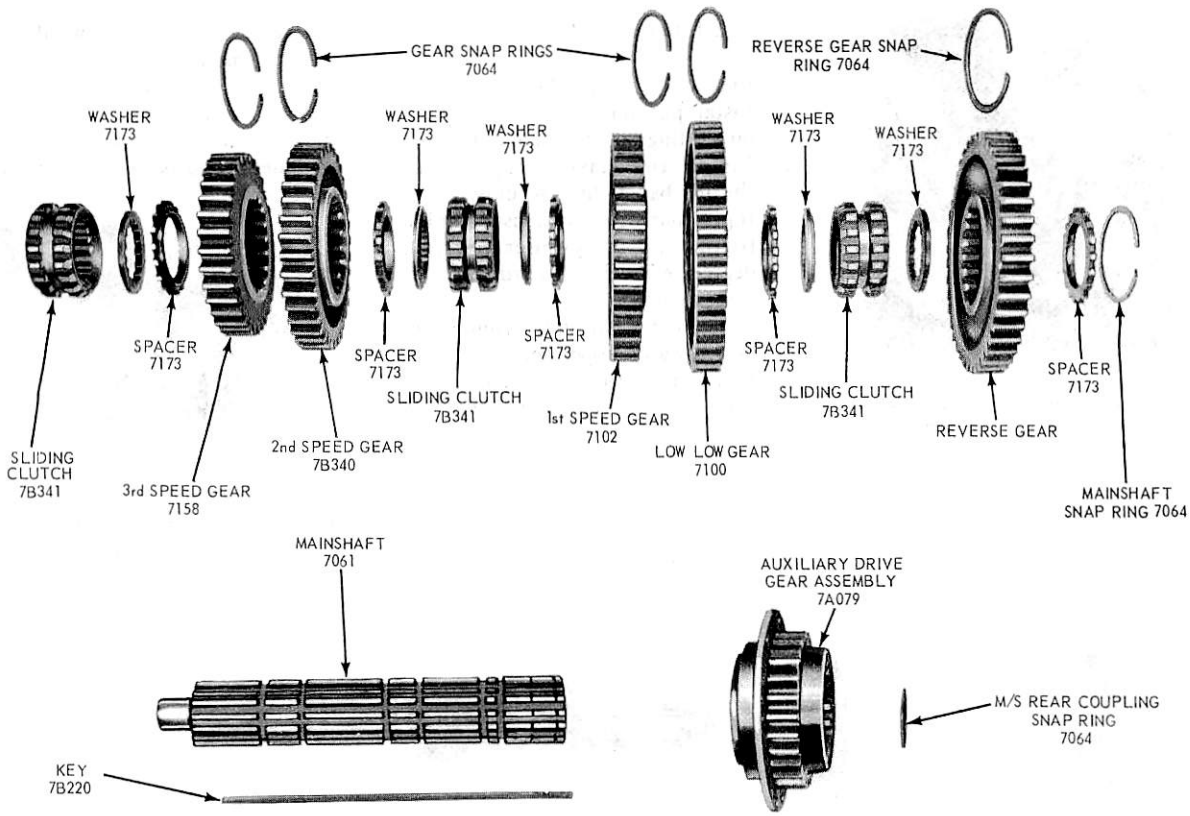

C 2244-C

FIG. 11 Mainshaft Assembly—Disassembled

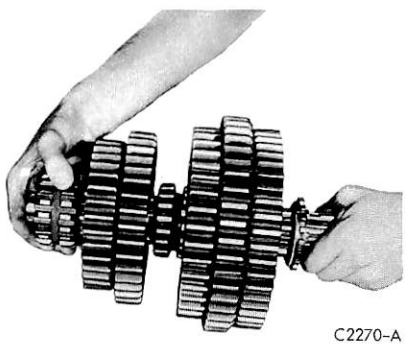

FIG. 12 Installing Third-Fourth Speed Sliding Clutch



FIG. 13 Relieving Drive Gear Bearing Nut

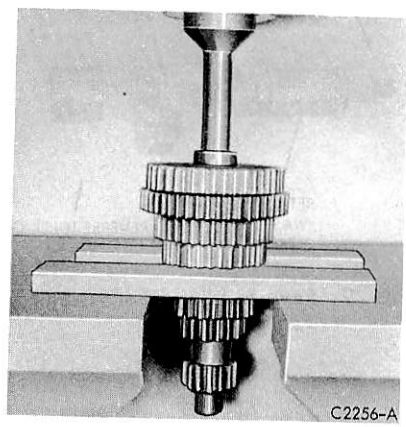

FIG. 14 Pressing Fourth, PTO, Third and Second-Speed Gears from Countershaft

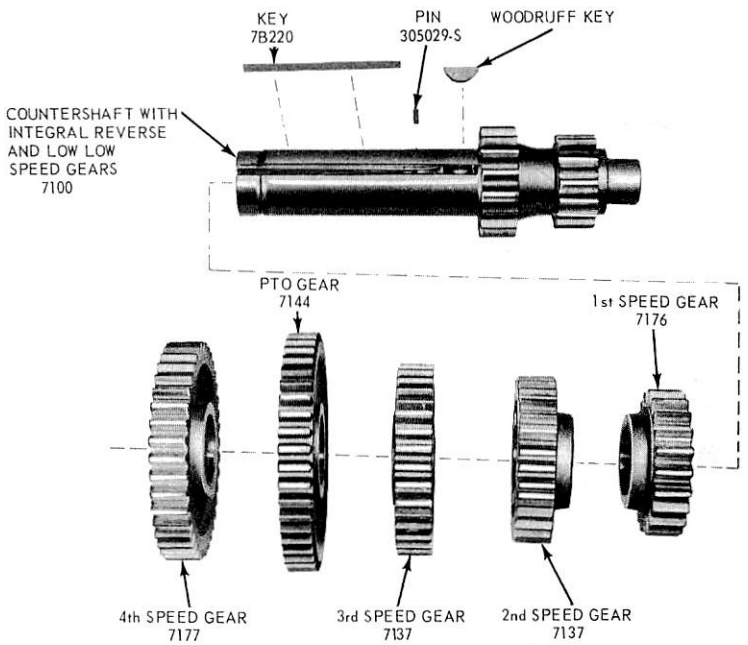

FIG. 15 Countershaft Assembly—Disassembled

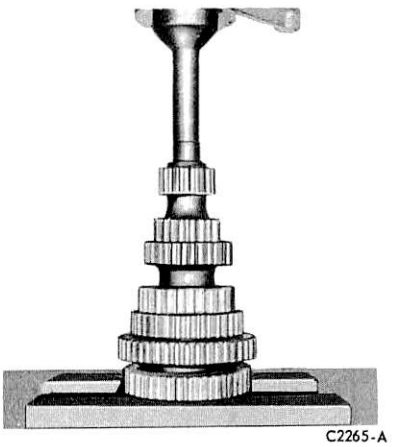

FIG. 20 Pressing Drive Gear on Countershaft

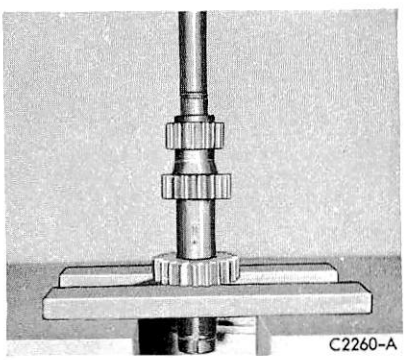

FIG. 16 Pressing First-Speed Gear on Countershaft

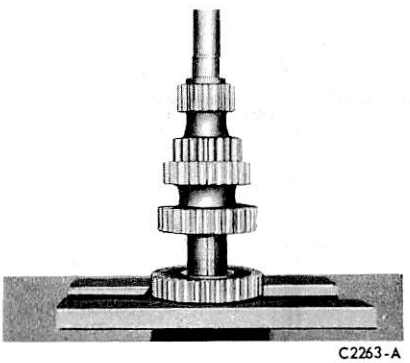

FIG. 18 Pressing Third-Speed Gear on Countershaft

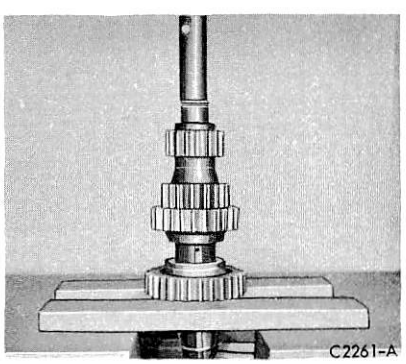

FIG. 17 Pressing Second-Speed Gear on Countershaft

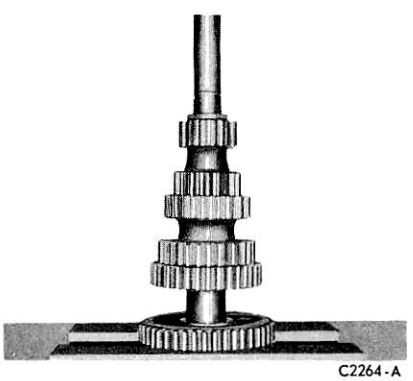

FIG. 19 Pressing PTO Gear on Countershaft

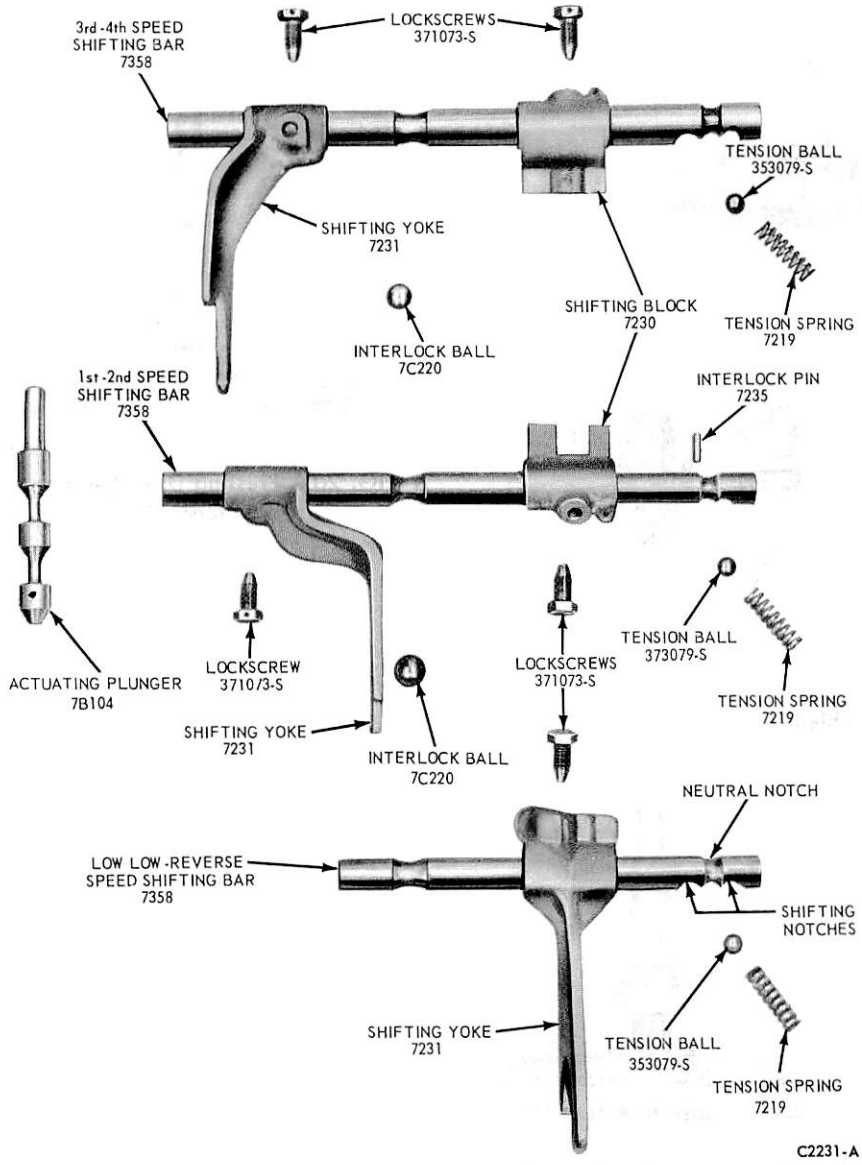

FiG. 21 Shifting Bar Housing—Disassembled

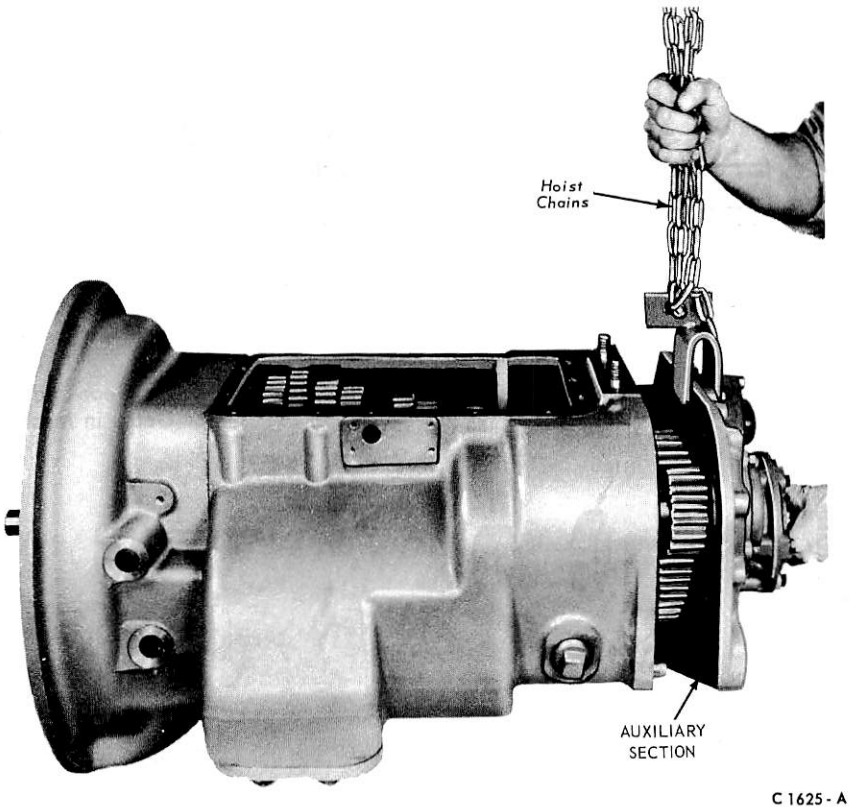

FIG. 22 Separation of Auxiliary Section

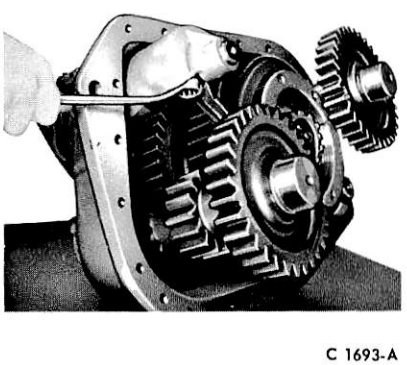

FIG. 23 Removing Shift Cylinder Housing Set Screws

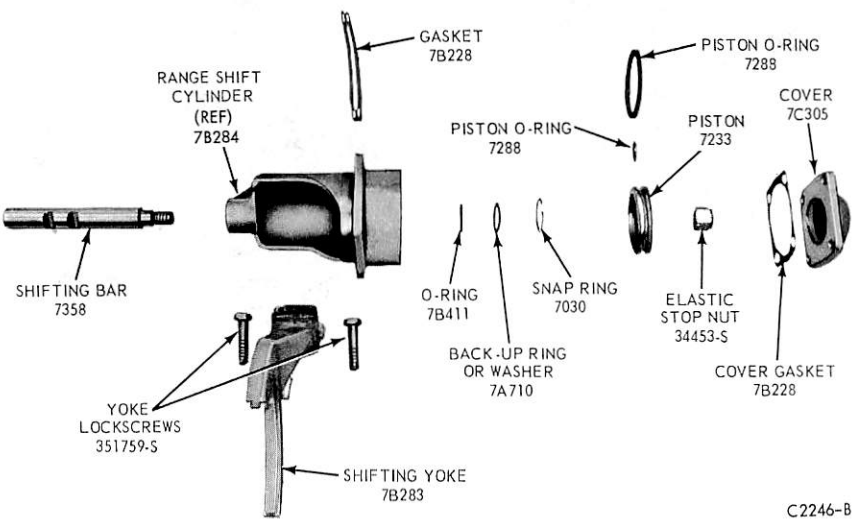

FIG. 24 Range Shift Cylinder—Disassembled

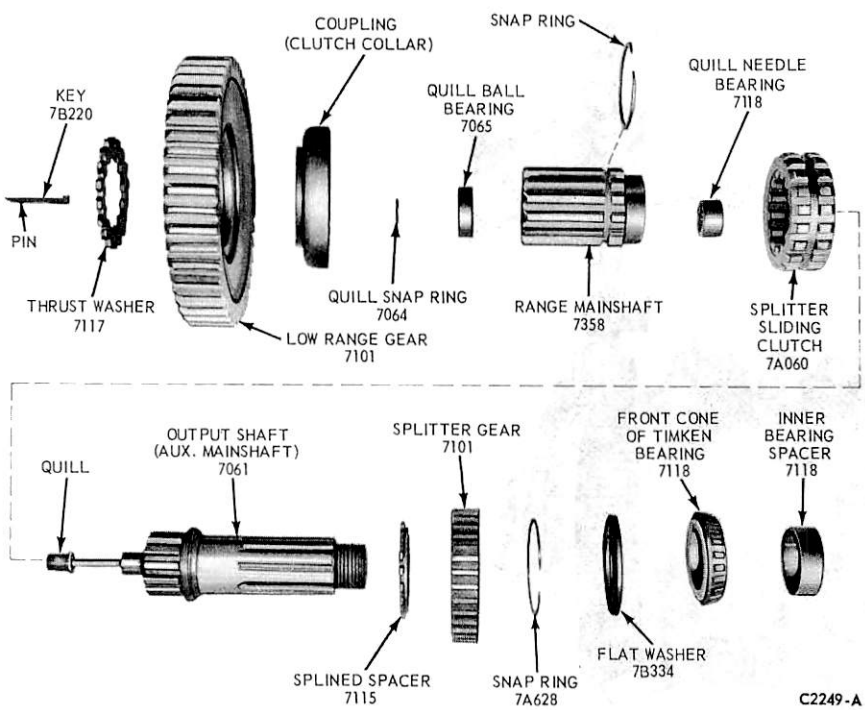

FIG. 25 Auxiliary Range Mainshaft and Output Shaft— Disassembled

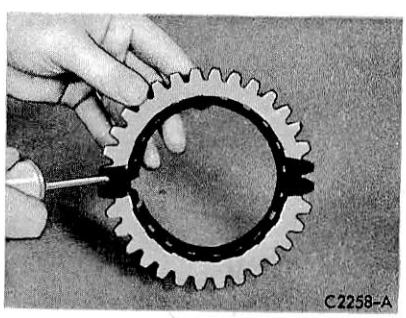

FIG. 26 Marking Teeth on Over-Drive Gear

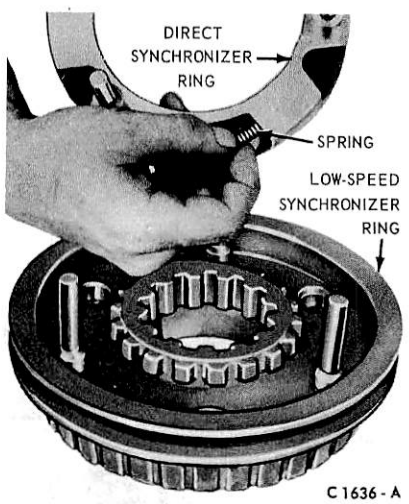

FIG. 27 Installing Synchronizer Springs

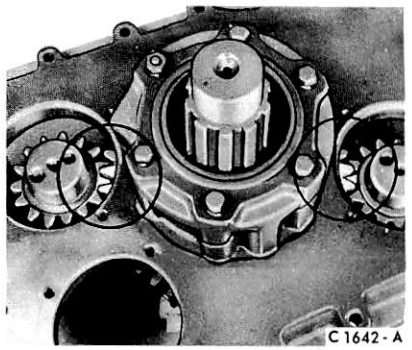

FIG. 28 Over-Drive Gear and Splitter Gears in Mesh

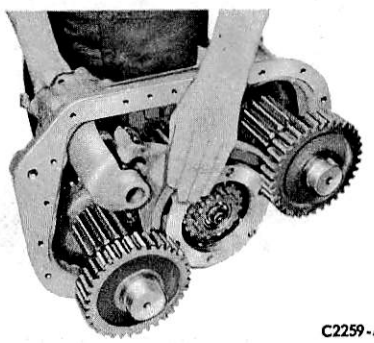

FIG. 29 Installing Range Shift Cylinder in Housing

SPECIFICATIONS

APPROXIMATE LUBRICANT REFILL CAPACITY (PTS)

Transmission— Fuller RTO and RTOF–9513	US	IMP
SAE 50 Engine Oil ESE M2C39 A1	27	22.5

END PLAY LIMITS (INCHES)

Reverse Speed Gear	0.005–0.038
Forward Speed Gears	0.005–0.012

BOLTS

Size	Location	Torque-Rating (Foot-Pounds)	Size	Location	Torque-Rating (Foot-Pounds)
1/4–20 x 1/2	Air filter to bracket	10–15	3/8–16 x 1-1/4	Gear shift lever housing	35–45
1/4–20 x 5/8	Air valve adapter plate	15–20	3/8–16 x 1-1/4	Auxiliary countershaft rear bearing covers	
1/4–20 x 7/8	Air valve adapter plate, rear		3/8–16 x 1-1/4	Auxiliary range shift cylinder	
1/4–20 x 1-3/4	Air valve		3/8–16 x 1-1/4	Auxiliary range shift cylinder cover	
5/16–18 x 1/2	Hand hole cover	25–35	3/8–16 x 1-3/4	Shift bar housing	
5/16–18 x 1-1/2	Splitter cylinder cover		3/8–16 x 2	Auxiliary housing	
3/8–16 x 3/4	PTO cover, small	35–45	3/8–16 x 2-3/4	Rear bearing cover	
3/8–16 x 3/4	Air filter bracket to case		7/16–14 x 1-1/4	PTO cover, large	50–65
3/8–16 x 1	Auxiliary drive gear bearing retainer		1/2–13 x 1-1/2	Clutch housing	70–75
3/8–16 x 1-1/2	Auxiliary housing		1/2–13 x 3-1/2	Clutch housing	
3/8–16 x 1-1/4	Front bearing cover		1/2–20 x 1	Countershaft front bearing retainers	50–65
3/8–16 x 1-1/4	Shift bar housing		1/2–20 x 1	Auxiliary countershaft rear bearing retainer	
3/8–16 x 1-1/4	Auxiliary housing		1/2–20 x 2	Range shift yoke	

NUTS

Size	Location	Torque-Rating (Foot-Pounds)	Size	Location	Torque-Rating (Foot-Pounds)
5/16–24	Gear shift lever pivot pin	15–20	5/8–18	Case	170–185
7/16–20	Splitter cylinder shift bar	20–25	5/8–18	Range cylinder shift bar	70–80
5/8–11	Splitter control jam	60–65	2–16	Output shaft	450–500
5/8–18	Reverse idler shaft	75–80			

CC 1058-B

PART 16-64 Spicer P8516 Sixteen Speed Compound Transmission

Applies to L-, LN-, LT-, LNT-9000 Only

COMPONENT INDEX	Page
COUNTERSHAFT	
Front Unit	
Assembly	64-08
Disassembly	64-08
Rear Unit	
Assembly	64-10
Disassembly	64-10
FRONT UNIT	
Assembly	64-05
Disassembly	64-05
JOINING FRONT AND REAR UNITS	64-08
MAINSHAFT	
Front Unit	
Assembly	64-07
Disassembly	64-07
Rear Unit	
Assembly	64-09
Disassembly	64-09

COMPONENT INDEX	Page
OVERHEAD CONTROL ASSEMBLY – FRONT UNIT	
Installation	64-02
Removal	64-02
REAR UNIT	
Assembly	64-09
Disassembly	64-09
SEPARATING FRONT AND REAR UNITS	64-08
SHIFTER HOUSING	
Front Unit	
Installation	64-03
Removal	64-03
Rear Unit	
Installation	64-03
Removal	64-03
SPECIFICATIONS	64-10

DESCRIPTION

TRANSMISSION

The Spicer model P8516 is an air-shifted compound transmission (Fig. 1).

One shift lever controls the selection of all sixteen forward speeds and four reverse speeds. The four-speed main section is shifted by manually moving the shift lever while the auxiliary portion is air-shifted by a flip switch button on the shift lever. Model P8516-3A has a 12.26 to one low-low gear ratio which makes it suitable for either on-or-off highway use. Model P8516-B has a 10.45:1 low-low ratio making it more suitable for on-highway operation.

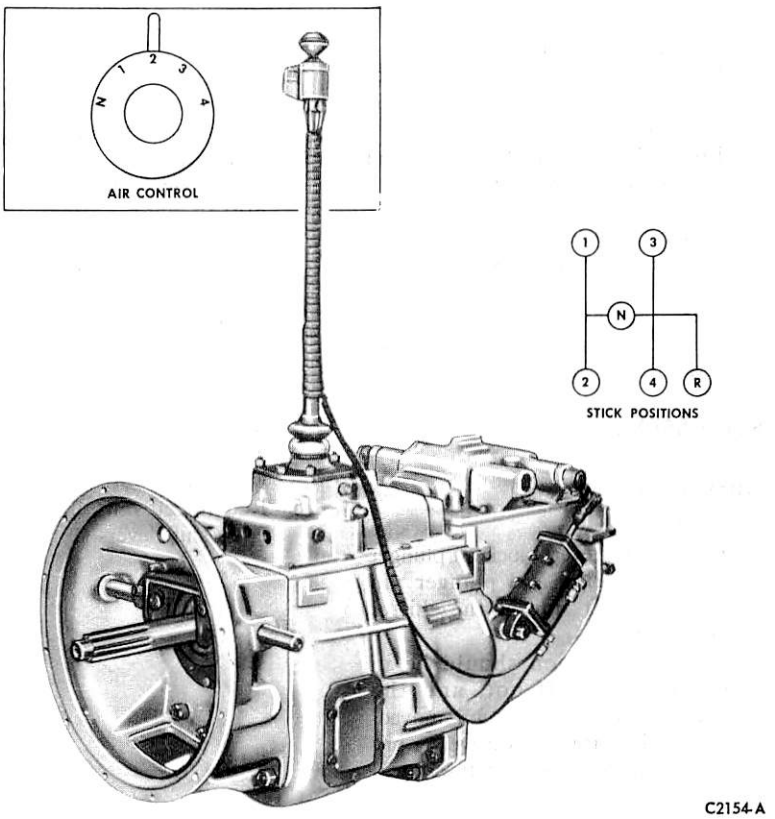

FIG. 1 P8516 Sixteen-Speed Compound Transmission

REMOVAL AND INSTALLATION

FRONT UNIT OVERHEAD CONTROL ASSEMBLY (GEAR SHIFT LEVER)

Removal

1. Shift the transmission into reverse.
2. Remove the retaining capscrews and washers (Fig. 2).
3. Separate the shifter dome from the filler block (if so equipped) or shifter housing and gasket(s) and lift straight up.

Installation

1. Shift unit into neutral so notches of shift forks and brackets align.
2. **Use light coat of gasket cement to assemble new gasket to shifter housing opening. If filler block is used, a second gasket will have to be used as shown in Fig. 2.**
3. Place shift lever and dome assembly on shifter housing, noting that finger end of shift lever enters the neutral positioned notches.
4. Secure with six capscrews and lock washers.
5. Assemble reverse lockout plunger to shifter housing. Preload and secure with spring in retainer.
6. Check shifting of transmission into all gear positions for satisfactory operation.

TRANSMISSION

Removal

1. Bleed the air reservoirs. Disconnect the air line at the top right side of the transmission.
2. Disconnect the drive shaft at the parking brake drum, and disconnect the speedometer cable (if so equipped).
3. After cleaning the area around the cross-shaft housing, remove the housing and tie it out of the way. Cover the opening in the gear shift housing.
4. Remove the shift control cable retaining clamp, and disconnect the cable at the air shift valve. Remove the two clevis pins securing the air shift cylinder (necessary for clearance of the transmission jack).
5. Disconnect the clutch release lever retracting spring. Remove the slave cylinder mounting bolts, and position the slave cylinder out of the way.
6. Remove all but two upper bolts of the clutch housing attaching bolts at the engine.
7. After securing a transmission jack to the transmission (Tool LRE 1790), raise the transmission slightly to relieve pressure at the side rail mounting brackets. Disconnect the mounting brackets (Fig. 3).
8. Disconnect the parking brake rod clevis and both air line clamps (on the side rail brackets). Disconnect the back-up light wire.
9. After removing the remaining clutch housing retaining bolts, pull the transmission rearward to clear the

input shaft.

10. Raise the front of the truck enough to provide clearance in removing the transmission, install safety stands, and then remove the transmission from under the vehicle.

Installation

1. Install two pilot studs in the clutch housing and remove the clutch housing dust cover.
2. Position the transmission under the vehicle, and then lower the vehicle.
3. Position the input shaft in the clutch discs, and start two of the transmission retaining bolts.
4. Torque all transmission-to-clutch-housing bolts to specification.
5. Install the air line retaining brackets on the side rail brackets. Connect the back-up light wire.
6. Install the clutch housing dust cover, the slave cylinder, and the retracting spring.
7. With the transmission front end connected at the engine and the transmission jack removed, position the transmission rear mounting studs and related parts (Fig. 3).
8. Torque the upper retaining nuts to specification. (Fig. 3).

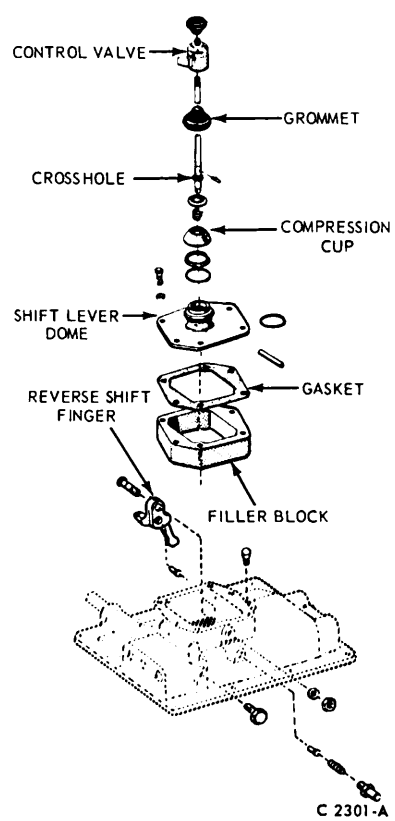

FIG. 2 Front Unit Overhead Control Assembly

9. Refer to Fig. 3 for further assembly instructions and Torque Valves.
10. Install the air shift cylinder, connect the air shift cable, and install the cable clamp.
11. Install the cross-shaft housing, and torque the mounting bolts to specification.
12. Connect the speedometer cable (if so equipped), the brake rod, and the air line.
13. Start the engine to build up air pressure, connect the drive shaft, and check for air leaks.

SUB-ASSEMBLIES

SHIFTER HOUSING

Removal

1. Remove the reverse lockout plunger retainer, spring and plunger pin from the left side of the shifter housing (Fig. 4).
2. The transmission should be in reverse gear. If not, and the overhead control has been removed, shift with a large screwdriver or pry bar, so that the reverse shift fork will clear.
3. Remove the retaining capscrews and lock washers. Lift the shifter housing straight up from the transmission case and gasket.

Installation

1. Use light coat of gasket cement and apply shift cover gasket to transmission case.
2. Place first-second and third-fourth speed sliding clutch gear collars in neutral position.
3. Slide reverse idler gear forward into complete engagement with countershaft gear.
4. Check to determine that shifter housing is in reverse and place housing in position on case. Make sure all three shift forks are in place on their respective shift collars.
5. Secure shifter housing to main case with capscrews and lock washers.
6. Before installing shift lever and dome, use large screwdriver or small pry bar and check movement of each shift rod to make sure transmission will shift easily and completely into each gear position.

AUXILIARY TRANSMISSION SUB-ASSEMBLIES

SHIFTER HOUSING

Removal

1. Remove the retaining capscrews and retaining stud nuts and lock washers.
2. Lift the housing straight up from the case and gasket.

Installation

1. Use light coat of gasket cement and assemble shifter housing gasket to rear case.
2. Place the front and rear sliding clutch gear collars in neutral position.
3. Check to determine that shift forks are in neutral position.
4. Place shifter housing into position on case, being careful that both shift forks engage their corresponding shift collars.
5. Secure shifter housing to rear case with capscrews, stud nuts and lock washers.
6. Reconnect shift linkage to outer cross shift levers (Fig. 4).

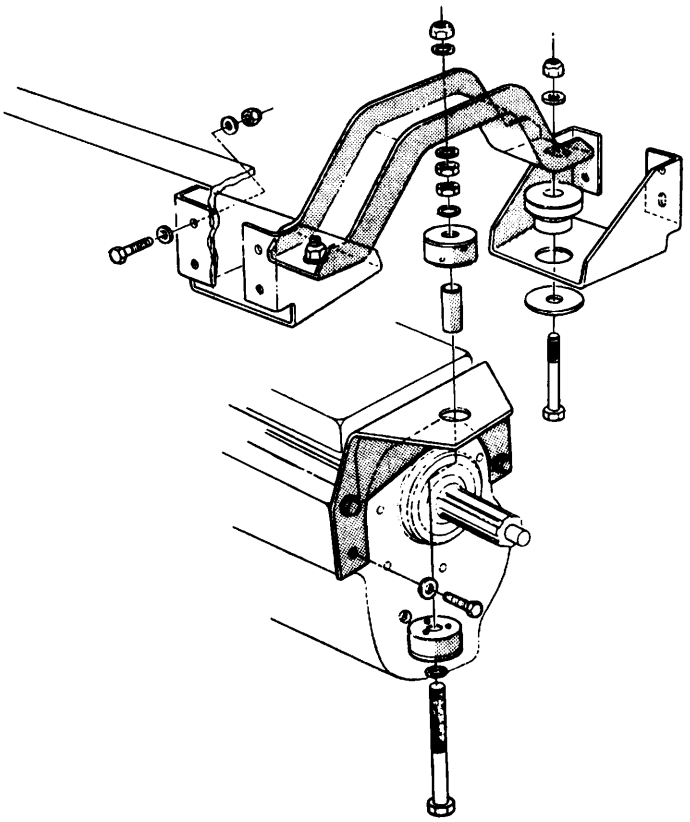

C 2155-A

FIG. 3 Transmission Rear Support Mounts

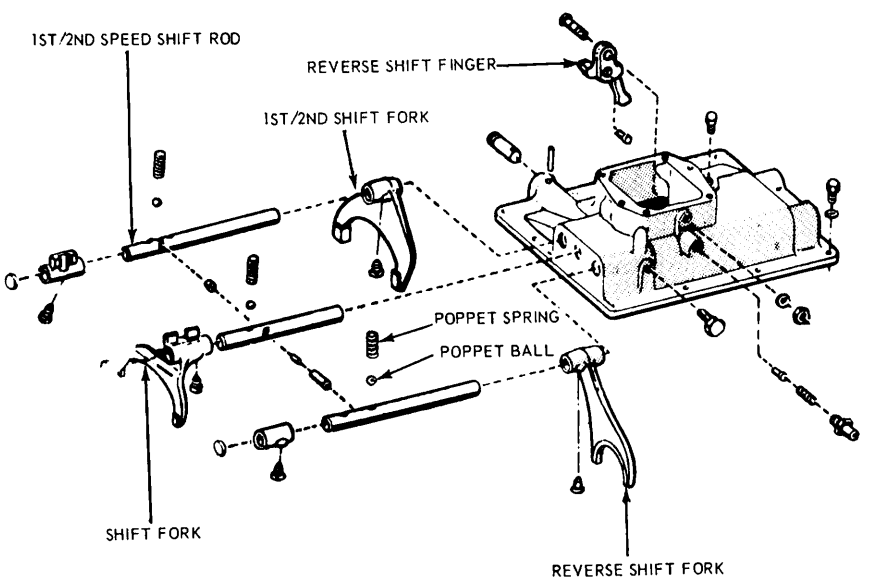

C 2303-A

FIG. 4 Front Unit Shifter Housing

DISASSEMBLY AND ASSEMBLY

MAIN TRANSMISSION

Refer to Auxiliary Transmission for instructions on separating the main and auxiliary sections of the transmission.

Disassembly

1. Lock the transmission in two gears by engaging third and fourth-speed clutch gear collar with drive gear, and reverse sliding gear with second-speed gear (Fig. 5).
2. See Fig. 6. Remove the capscrew and washer attaching the long clutch release shaft to the clutch release yoke.
3. Remove the key and tap the release shaft free of the yoke. Remove the shaft through the side of the clutch housing. It is not necessary to remove the clutch housing unless it is damaged.
4. Slide the yoke and the short shaft toward the inside of the housing and remove as a unit.
5. Remove the stud nuts (Fig. 7) and lock washers from the main drive gear bearing cap.
6. If the bearing cap oil seal is damaged, remove it with a drift.
7. Unstake the drive gear bearing nut from slots in the drive gear shaft. Use a suitable tool to remove the bearing nut from the main drive gear, **keeping in mind that the drive gear bearing nut has a left hand thread (Fig. 5).**
8. Support the outer race of the bearing and press the main drive gear out.
9. If the mainshaft pocket bearing remained in the drive gear, remove it.
10. Slide the third and fourth clutch collar from the clutch gear.
11. Remove the capscrews and washers from the retainer.
12. Remove the lock wire from the capscrews.
13. Remove the capscrews and lockplate from the pocket of the mainshaft rear drive gear (Fig. 5).
14. Use a suitable puller tool to remove the rear drive gear from the mainshaft splines.
15. Use a suitable wire or rope sling under the approximate center of the mainshaft gears, and remove the mainshaft and gears from the case.
16. Remove the reverse idler shaft lockplate by removing the lockplate capscrew and lock washer.
17. Using a long through bolt with 1 3/4 inch by 6 inch tubing and flat washer pull the reverse idler gear shaft out through the rear of the case.
18. Remove the reverse idler gear sub-assembly from the case as the idler shaft is pulled free (Fig. 8).
19. Remove the countershaft front bearing cap.
20. Remove the lock wire from the capscrews.
21. Remove the capscrews and the lockplate from the end of the shaft.
22. Using a suitable puller tool, or puller screws, remove the bearing retainer and taper bearings from the shaft.
23. Move the countershaft sub-assembly toward the rear of the case until the rear bearing is free of the case bore. Using a suitable puller, remove the bearing from the countershaft (Fig. 8).
24. With the countershaft free of the front bearings, lift the front end up first and remove the entire sub-assembly from the case.

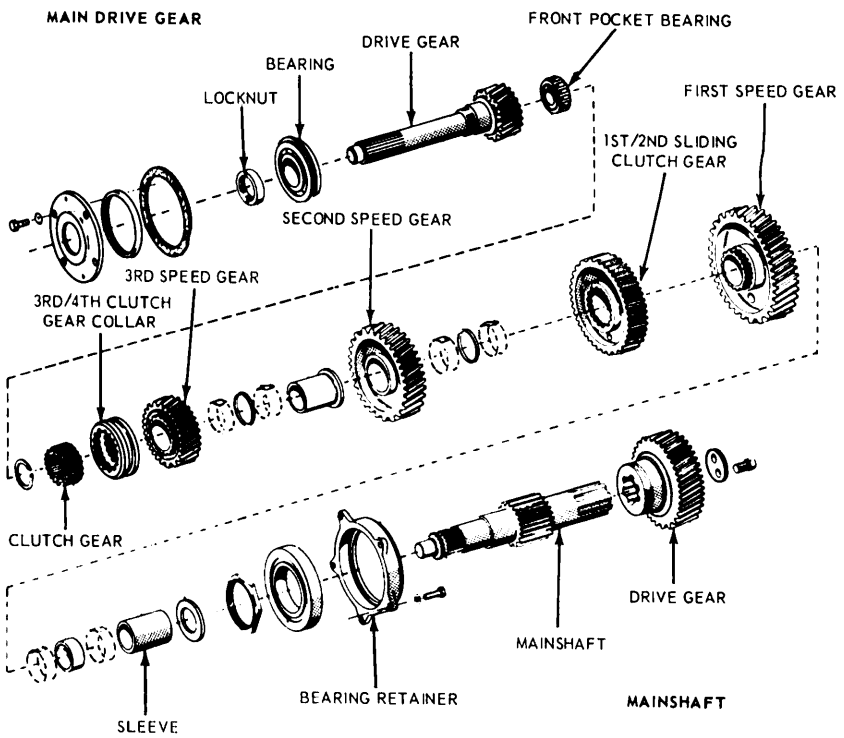

FIG. 5 Front Unit Drive Gear and Mainshaft

Assembly

1. Lower the countershaft assembly into the case with the rear end through the rear bearing retainer bore. Align the front end of the shaft with the front bearing retainer bore.
2. Assemble the tapered bearings and cones into the retainer. Place the gasket on the retainer and bearing sub-assembly.
3. Assemble the bearing retainer sub-assembly onto the end of the shaft, and press, or tap it into the case bore.

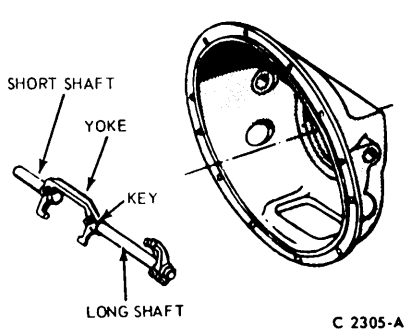

FIG. 6 Clutch Housing and Release Parts

4. Pull the front cup approximately 3/32 inch out of the retainer bore. Place the correct shim pack on the retainer to allow 0.003 to 0.008 inches countershaft end play movement. Holes in bearing retainer cap and shim pack are equally spaced except for one which is displaced 5 degrees to insure alignment of the oil return pocket. There is enough clearance in the shim pack, however, to allow it to be assembled backwards. When this occurs the threads of the screws engage the edge of the shim pack and pull metal into the screw holes as well as inflicting a wrinkle to the pack itself. It is suggested that the four capscrews be put through the bearing cap; then, place the shim pack on the capscrews. This will serve as a pre-assembly stacker and align the shims properly.
5. Secure the bearings on the shaft with the lockplate and capscrews. Torque the capscrews to 40-50 ft-lbs and secure with lock wire.
6. Assemble the front cap to the case and secure with capscrews and lock washers. Torque capscrews to 40-50 ft-lbs.
7. Position the rear bearing on the countershaft, external snap ring toward rear. Align shaft and bearing with case bore and, using tubing, drive against inner race until bearing is seated. **Use caution when installing bearing as improper alignment can cause severe brinelling to inner race and distortion to the rolls.**
8. Check countershaft end play, which should be .003-.008 before installing mainshaft into case.
9. Assemble the reverse idler gear key to the sleeve.
10. Assemble the gear to the sleeve and make sure the gear slides back and forth freely on the key. It should be noted that the sleeve has been ground to incorporate a hopping guard (to prevent walking out of reverse). The gear must be assembled to the sleeve with the shift fork collar toward the rear. The smaller OD end of the sleeve is stamped **front. If these letters are raised, or rough, they should be ground flush.**
11. Grease the two sets of roller bearings (Fig. 8) lightly and assemble to the bore of the sleeve.
12. Place the reverse idler assembly in the case, with thrust washers one at each end of the sleeve.
13. Insert the reverse idler gear shaft plain end first, through hole in rear of the case and into reverse idler bearings. Align **flat** on rear end of shaft for lockplate and tap into final position.
14. Assemble lockplate to case with capscrew and lock washer.
15. Position drive gear bearing under arbor with shield up. Support inner race of bearing and press drive gear into bearing.
16. Using soft jaws in vise, clamp on teeth of drive gear and assemble lock nut. This is a left hand thread. Tighten lock nut to 550-600 ft-lbs torque. Stake lock nut in two grooves provided on drive gear. If lock nut has a straight OD the bearing cap (with oil seal installed) must be assembled OVER THE DRIVE GEAR AND BEARING BEFORE ASSEMBLING AND TORQUING LOCK NUT. If lock nut has taper on the OD, the lock nut can be assembled and torqued on the drive gear and bearing. Then the bearing cap and seal can be assembled over the tapered OD lock nut without damage to the seal lip. Damage of the seal lip in bearing cap will cause oil leakage when transmission is assembled into the vehicle. Oil leakage could find its way up the drive gear stem and be thrown into the clutch facing of the clutch discs. This will cause clutch slippage, and eventual clutch and transmission damage.
17. Apply a light coat of gasket cement to sealing face of drive gear bearing cap. Most drive gear bearing caps

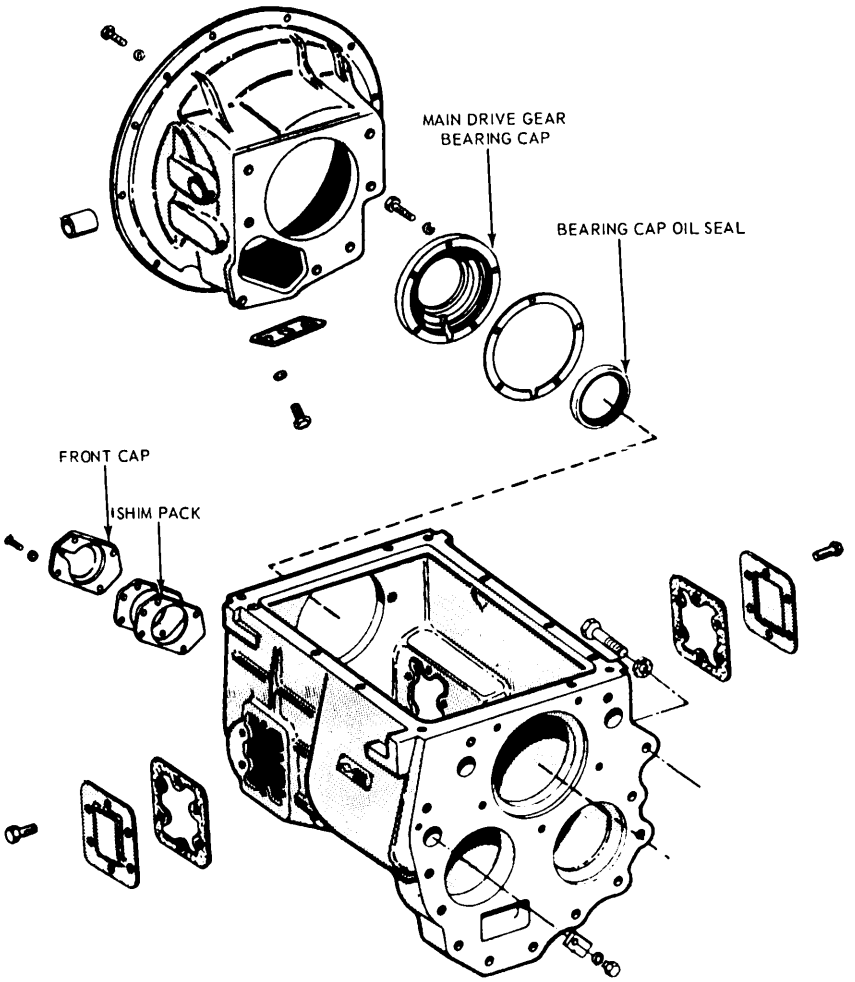

FIG. 7 Front End Disassembly

are marked TOP. **When the word TOP is up, the oil drain back hole should be at the 7 o'clock position.**

18. Assemble main drive gear and bearing cap sub-assembly to the front of the mainshaft. Roll mainshaft up with large screwdriver to align pocket bearing on mainshaft with bearing bore of drive gear.
19. Locate and secure bearing cap to main case with capscrews and lock washers. Torque capscrews to 25-28 ft-lbs.
20. Position the clutch housing on the case studs or retain with capscrews and lock washers.
21. Lower rear end of mainshaft assembly into case and out rear bore of case. Lower front of shaft into position and mesh mainshaft gears with countershaft gear.
22. Using a 13/16 inch thick flat steel stock for support block, insert stock between front of case and front of mainshaft. Lift entire case assembly onto press bed, with front of case down on bed. Keep mainshaft with gears centralized to the rear bore.
23. Place rear drive gear sub-assembly on output spline of shaft. Press onto splines, aligning bearings to rear bearing diameter, and locating holes of bearing retainer to holes in rear face of case.
24. Assemble capscrew and washers to bearing retainer and case. Torque capscrews 40-50 ft-lbs.
25. Assemble lockplate and capscrews to mainshaft. Torque capscrews to 60-80 ft-lbs. Secure with lock wire.
26. Remove entire case assembly from the press, and put assembly on floor, in vertical position for preparation of joining rear case assembly and front case assembly.
27. Rotate front drive gear to make sure all gears and shafts turn free.
28. Unlock transmission gears and make sure mainshaft rotates freely.
29. Assemble pocket bearing to end of mainshaft. Since pocket bearing fits tight on end of mainshaft, use tubing to drive against inner-race.
30. Install the short clutch release shaft (Fig. 7) and the release yoke through the side of the clutch housing.
31. Install the long clutch release shaft in the opposite side and assemble it to the yoke with key, capscrew, and lock washer.

MAIN TRANSMISSION SUB-ASSEMBLIES

MAINSHAFT

Disassembly

1. If the front pocket bearing remained on the mainshaft, remove it with a puller.
2. Unstake the drive gear bearing lock nut, and remove the lock nut (Fig. 5).
3. **Place the drive gear and bearing subassembly vertically in an Arbor Press with the front end up. Use two 1/4 inch thick plates to support under the bearing retainer and press the gear free of the bearing.**
4. Press the bearing retainer free of the bearing.
5. Remove the snap ring from the front end of the mainshaft.
6. Remove the clutch gear from the splines.
7. Remove the third-speed gear, being careful to retain the needle rollers with the gear.
8. Remove the third-speed gear sleeve from the shaft. If this requires more than normal force, use a puller behind the teeth of the second-speed gear and remove the gear and the sleeve from the shaft together. **When pulling the second-speed gear, use caution to retain the needle rollers or they may fall away from the gear when it is removed from the shaft.**
9. Remove the sliding gear from the shaft splines.
10. Remove the first-speed gear from the shaft with the needle rollers and the thrust washer.
11. If the sleeve is worn or damaged, it should be replaced.

Assembly

1. **Set mainshaft vertically in a vise with the front or pilot bearing diameter up. Protective vise jaws should be used to grip the diameter, and against the shoulder at end of the long splines. To fit new parts an Arbor Press may be required. If so, follow this same procedure. All needle bearing rollers and spacers should be assembled into the gear bores before assembly of gears onto the mainshaft. Use heavy grease in the gear bores to hold the needles in place. The needle bearings should not completely encircle the bore. Space for one needle should be left unfilled to allow for adequate lubrication and free movement of the bearings.**
2. With the bearings and spacer in the bore of the second-speed gear, assemble the gear to the mainshaft with the clutch teeth down or toward the splined center section.
3. With the needle bearings and the spacer in the bore of the third-speed gear, place the third gear sleeve into the gear needle bearing bore with flange end on the opposite end of the gear clutching teeth.

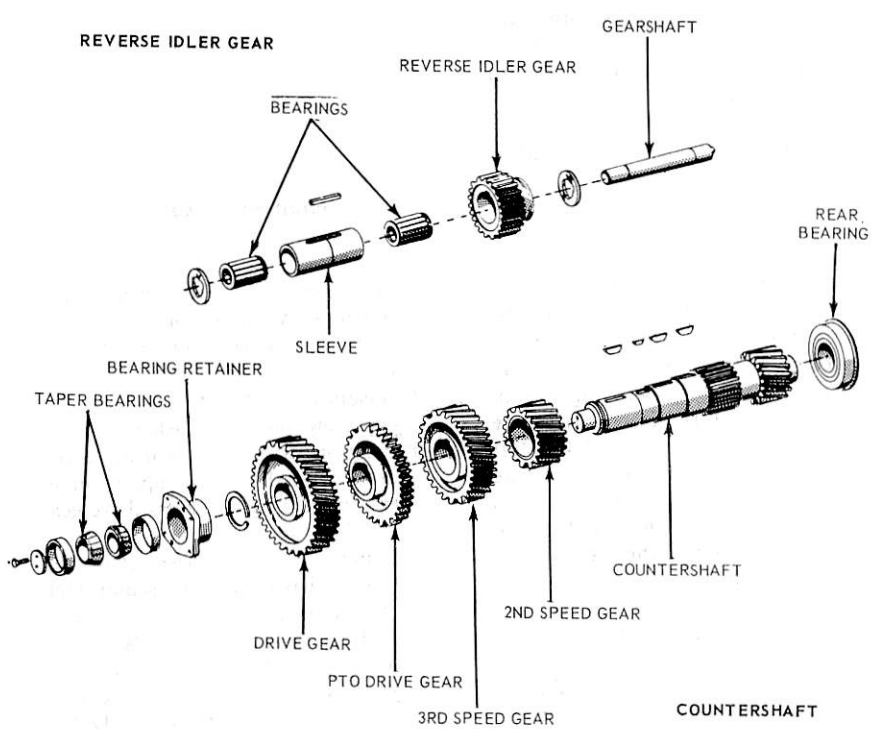

FIG. 8 Reverse Idler Gear and Countershaft Components

4. Assemble the third-speed gear sub-assembly to the mainshaft with the flange of sleeve down or toward the second-speed gear.
5. Aligning the two locking ball notches at the upper end of the sleeve with the splines of the mainshaft, lock the sleeve to the shaft with the lock balls in the bottom of the shaft splines and notches of the sleeve.
6. Check the second-speed gear for free rotation after the sleeve is in place.
7. Assemble third-fourth clutch gear to the shaft splines with the ground end down against the third-speed gear. Both ends are ground and there is no snout on this gear.
8. Assemble the snap ring to the mainshaft to lock the clutch gear in place. Use caution when assembling the snap ring to the shaft to prevent extending or distorting the snap ring. All snap rings must seat firmly in grooves to give secure locking action.
9. **Assemble the pilot bearing to the end of the mainshaft. Using a piece of tubing against the inner race of the bearing to tap onto the shaft, seat the bearing firmly against shaft shoulder.**
10. Reverse the position of the mainshaft in the vise so that the assembly rests on the third-speed gear and protective vise jaws clamp on the clutch gear.
11. Assemble first and second-speed sliding clutch gear to the shaft splines with the shift fork collar up or toward the rear of the shaft.
12. With the needle bearing roller and spacer assembled into the bore of the first-speed gear, assemble the sleeve onto the mainshaft. Seat sleeve firmly against the shoulder of the shaft.
13. Assemble the first-speed gear sub-assembly onto the shaft and onto the sleeve with the clutch teeth of the gear down, or toward the center spline section.
14. Apply a heavy coat of grease to the first-speed gear thrust washer and assemble onto the shaft and against the face of the first-speed gear.
15. If the thrust washer is a loose ID fit, use a heavy rubber band or similar device to hold the washer and needles in place.
16. **Remove the shaft assembly from the vise. Apply a light coat of grease to the splines and assembly thirdfourth speed clutch collar to the clutch gear. Position the mainshaft rear drive gear bearing retainer under Arbor and press the bearing into the retainer. Use a suitable tube to permit pressing on the outer race of the bearing.**
17. **Turn the mainshaft drive gear bearing and retainer over on the Arbor. Support the inner race of the bearing and press the mainshaft rear drive gear through the bearing until the bearing seats against the shoulder of the rear drive gear.**
18. **Remove the drive gear and bearing sub-assembly from the Arbor Press and assemble the bearing lock nut to the drive gear threads. Torque the lock nut to 550-600 ft-lbs. Stake the nut in two places provided on drive gear.**

COUNTERSHAFT

Disassembly

1. Remove the drive gear snap ring.
2. Press the countershaft out of the gears one at a time by supporting behind the gear as close to the hub as possible.
3. Remove the Woodruff keys.

Assembly

1. If Woodruff keys, or the keyways have become burred or damaged during disassembly, dress with a file before reusing them to prevent metal chip damage to the gear hub faces. As new countershaft gears have a **shrink (or interference) fit of 0.0015 to 0.003 inches, the gear bores should preferably be expanded before assembly to the shaft. Boiling water, or steam or hot oil (not to exceed 250 degrees F) can be used for this. Any other heating method will damage the gears and adversely affect their service life.**

If heat is not used, coat the gear bores, and the shaft, liberally with white lead to prevent galling or seizing of parts.

2. Assemble the Woodruff keys to the countershaft, seating them securely.
3. **In suitable Arbor Press, support second-speed gear on hub with chamfer up. Place countershaft in bore, align key and keyway and press shaft into gear until seated firmly against shoulder.**
4. In a similar manner, support third-speed gear with chamfer up. Place countershaft in bore, align key and keyway and press shaft into gear until seated firmly against gear.
5. Next, support PTO drive gear on long hub with chamfer up. Place countershaft in bore, align key and keyway and press shaft into gear until seated firmly against gear.
6. Support countershaft drive gear on short hub with long hub and chamfer up. Place countershaft in bore, align key and keyway and press shaft into gear until seated firmly against gear.
7. Assemble snap ring to countershaft to lock drive gear in place.

Use caution when assembling snap ring to countershaft to prevent extending or distorting snap ring. **Snap rings must seat firmly to give secure locking action.**

AUXILIARY TRANSMISSION

SEPARATION OF MAIN AND AUXILIARY SECTIONS

1. From inside (near the top) of the rear case, cut the lock wire and remove the two attaching capscrews and lock washers.
2. Use a bridge chain across the holes from which the capscrews were removed to support the unit.
3. From outside the case remove the remaining capscrews, bolts and washers.
4. Separate the two units with a pry bar, while leveling the rear unit with a chain fall.

JOINING OF MAIN AND AUXILIARY SECTIONS

1. Tie the third-fourth clutch gear collar to the third-speed gear or assemble collar to rear of mainshaft. Note long snout of clutch collar points toward mainshaft.
2. Pick up the rear unit with a chain hoist attached to the output end yoke or companion flange and suspend vertically over front unit.
3. Lower rear unit into place using caution to align rear mainshaft with pocket bearing of front mainshaft and drive gear teeth with countershaft drive gear.
4. Bolt the cases together using the two drilled head capscrews, with star washers on top inside holes of rear case.
5. **Assemble five capscrews with new star washers through flange on right hand side of front case into rear case. Three capscrews and washers are assembled from rear into right hand side of front case.**
6. The longest through-bolt assembles front to rear in bottom center hole of cases. Two shorter bolts assemble to left of bottom center. Use washers and nuts on all bolts.
7. After starting all capscrews and bolts, progressively tighten and pull cases together. Torque capscrews and nuts to 120-150 ft-lbs. Lock wire the internal capscrews together.
8. Use chain hoist to lift complete assembly and lower into a horizontal position. Make sure that oil holes in gears are not plugged up with grease

to insure initial lubrication of over-running gears. Use a large pressure type oil can to force lubricant in oil holes and end slots of all mainshaft floating gears to flush out grease used during assembly of needle roller bearings.

9. Check regulator air pressure with air gauge. P.S.I. should be 50-55.

DISASSEMBLY OF AUXILIARY SECTION

1. Remove the pocket bearing from the front of the mainshaft. Use a suitable puller, if necessary, to remove the inner race.
2. Lock the unit in two gears by engaging the third and fourth-speed clutch collar with the fourth-speed gear and the first and second-speed clutch collar with the first-speed gear.
3. Remove the mainshaft rear flange lock nut. Also remove the flat washer.
4. Use a puller to remove the end yoke from the mainshaft.
5. Remove the retaining capscrews and lock washers from the mainshaft and countershaft rear bearing caps.
6. Press out the rear bearing cap oil seal. Remove the speedometer bushing if it is to be replaced.
7. Remove the speedometer drive gear and mainshaft rear thrust washer.
8. Use two pieces of hardwood to block the third-fourth speed clutch gear against the inside front of the case. Using a brass drift, drive the mainshaft forward to expose the third-fourth speed clutch gear split lock ring.
9. Remove the wood blocks and the split ring. Remove the third-fourth speed clutch collar and gear.
10. Using a brass drift, drive the mainshaft rearward and remove the rear bearing and thrust washer. **Do not lose the needle bearings.**
11. Continue to drive the mainshaft rearward and remove the following parts as the mainshaft clears their bores: Fourth speed (overdrive) gear, intact with sleeve, needle bearings and spacer, second-speed gear intact with sleeve, needle bearings and spacer, first-second speed clutch collar, first-speed gear intact with clutch gear, sleeve, needle bearings and spacer.
12. Remove the remaining mainshaft assembly out through the top of the case.
13. Cut the lock wire and remove the two retaining capscrews from the front of the countershaft. Remove the front bearing retaining washer.
14. With a brass drift, drive the countershaft assembly rearward to clear the front bearing which will remain in the case bore. The rear bearing will be driven out of the case.
15. Remove bearing retaining snap ring from rear end of shaft and use suitable puller to remove rear bearing.
16. Lift countershaft assembly out top of case.

ASSEMBLY OF AUXILIARY SECTION

1. Lower the rear end of the countershaft assembly into the case with the end of the shaft and the first-speed gear through the rear bearing bore. Lower the front of the countershaft into approximate position. Maintain alignment with a cable support or by blocking up the drive gear.
2. Align the outer race assembly of the rear bearing with the inner race and rear bore and top the bearing flush with the case.
3. Assemble the countershaft rear bearing cap gasket to the bearing cap. Install the cap and gasket in the case.
4. Dip the capscrews retaining the bearing cap in gasket cement and install the capscrews. Torque to 40-50 ft-lbs.
5. Position the front bearing on the countershaft with the external snap ring away from the case.
6. Position a wood block between the second-speed gear and the case rear wall. With tubing, drive against the inner race of the bearing until it is seated against the hub of the drive gear.
7. Secure the bearing with the retainer and capscrew. Torque the capscrew 40-50 ft-lbs.
8. Position the first-speed gear and sleeve assembly in the rear of the case with the clutch teeth facing the front of the case. Mesh the gear with the countershaft gear.
9. Install the first-second speed clutch collar to the first-speed gear.
10. Position the second-speed gear and sleeve in the case with the clutch teeth facing the first-speed gear. Mesh the gear with the countershaft gear. Move the clutch collar to neutral.
11. Lightly coat the thrust faces and splines of the mainshaft with grease. Insert the pilot bearing end of the mainshaft through the rear bearing until the shaft has passed through the second gear sleeve.
12. Position the fourth-speed gear and sleeve assembly in the case with the clutch teeth facing the front of the case. Slide the mainshaft forward through the bore of the sleeve.
13. Position the third-fourth speed clutch collar to the clutch gear with the lock ring counterbore in the end of the gear toward the front. Position the gear and collar in the case and install on the mainshaft splines.
14. Block the third-fourth clutch gear and tap the mainshaft through until the locking groove in the mainshaft is beyond the clutch gear.
15. Coat the two clutch gear lock rings with heavy grease and place in the groove of the mainshaft.
16. Tap the mainshaft rearward until the lock rings center inside the counterbore of the third-fourth speed clutch gear.
17. Position the first-speed thrust washer on the rear of the mainshaft next to the first-speed gear.
18. Position the mainshaft rear bearing onto the mainshaft with the external snap ring away from the case. Use a 3/4 inch thick strip of flat stock to block the front of the mainshaft against the inside of the case. Using a pinch bar, roll the mainshaft into position to align the outer race of bearing with the case bore. Using tubing, drive on the bearing inner race until the bearing is seated against the first-speed gear thrust washer.
19. Remove the block and continue to tap the bearing into the case bore until the snap ring is seated against the case.
20. Position the rear bearing washer and speedometer gear on the mainshaft and seat them against the rear bearing.
21. Apply a light coat of gasket cement to the OD of the rear bearing cap oil seal and press it into the cap.
22. Apply gasket cement to the mainshaft rear bearing cap gasket and install it on the cap. Be sure the oil passages are aligned.
23. Install the rear bearing cap on the case and install the capscrews.
24. Install the flange on the mainshaft. **Do not drive the flange on the mainshaft unless the shaft has been blocked to prevent it from moving forward. Also do not damage the pilot surfaces or bearing diameters.**
25. Install the flat washer and lock nut on the flange. Lock the unit in two gears and torque the lock nut to 400-450 ft-lbs.
26. Torque the countershaft front lock nut to 550-600 ft-lbs. Stake the nut in the slot in the shaft.
27. Shift the clutch collars back into neutral to be sure all shafts turn

freely.

28. Install the drive gear pocket bearing.

AUXILIARY SECTION SUB-ASSEMBLIES

MAINSHAFT

Disassembly

1. **Using an Arbor Press, press the shaft out of the rear bearing and first-speed thrust washer.**

Assembly

1. Due to variations in tolerances and to provide better bearing lubrication, needle bearings should not completely encircle the shaft. Space for approximately one needle should be left unfilled on all needle bearing applications. This will aid in preventing seizures by allowing easier oil entry and free movement of the needle bearings.

To reassemble needle roller bearings, the following steps are suggested. If, however, it is more convenient to assemble needle bearing to inside of gears rather than on shaft and sleeve, the method is applicable.

2. Place the first-second speed clutch gear on the bench with the flange down. Apply a light coat of grease to the area above the flange. Assemble one row of 72 needle bearings to the clutch gear and install the spacer. Apply a light coat of grease and assemble the second row of 72 needle bearings.
3. With the clutch teeth down toward the flange, assemble the first-speed gear to the clutch gear, over the needles and spacer.
4. Coat the second-speed gear sleeve lightly with grease and install two rows of 72 needle bearings with a spacer between.
5. Install the second-speed gear on the sleeve and bearing with the clutch teeth of the gear away from the flange.
6. Place the fourth-speed gear sleeve on the flat plate and coat the sleeve with a light coat of grease. Install two rows of 62 needle bearings with a spacer between.
7. Assemble the fourth-speed gear to the sleeve and bearing with the clutch teeth facing upward.

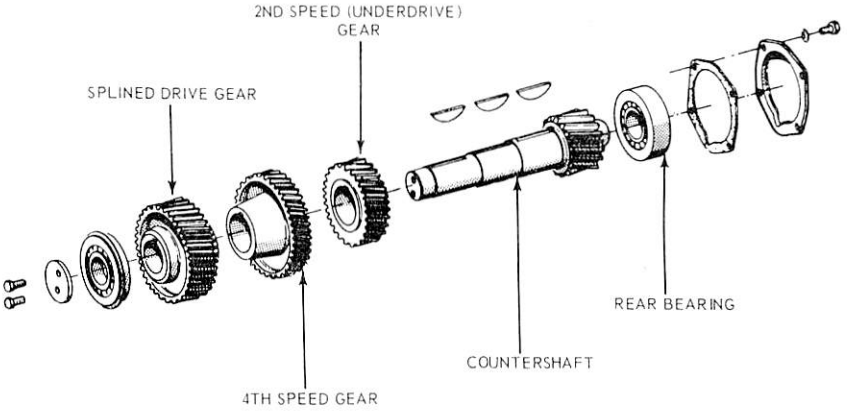

FIG. 9 Rear Unit Countershaft Components

COUNTERSHAFT

Disassembly

1. Remove the front bearing by tapping out with a soft hammer.
2. Press the countershaft out of the gears (one at a time) by supporting each gear with paralled bars as close to the hub as possible. Remove the drive gear and the third-speed (overdrive gear).
3. Remove the two exposed Woodruff keys (Fig. 9).
4. Support the first-speed (underdrive) gear and press the countershaft out of the PTO drive gear spacer at the same time.
5. Remove the remaining Woodruff key.

Assembly

1. If the Woodruff keys, or the keyways have been burred or damaged during disassembly, dress with a file before reusing them to prevent metal chip damage to the gear hub faces.

As new countershaft gears have a shrink (or interference) fit of 0.0015 to 0.003 inches, the gear bores should preferably be expanded before assembly to the shaft. Boiling water, steam or hot oil (not to exceed 250 degrees F) can be used for this. **Any other heating method will damage the gears and adversely affect their service life.**

If heat is not used, coat the gear bores, and the shaft, liberally with white lead to prevent galling or seizing of parts.

2. Assemble Woodruff key to the countershaft and seat securely.
3. Using an Arbor press, support the first-speed (underdrive gear) on the hub (with the long hub and chamfer up). Place the countershaft in position, align the key with the keyway and press into gear until the shoulder on the countershaft seats firmly against the gear.
4. Assemble the PTO drive gear spacer to the shaft and seat it against the gear. Assemble the remaining Woodruff keys to the countershaft and seat securely.
5. **Using the Arbor Press, support under the hub of the third-speed (overdrive) gear with long hub down and chamfer up. Place the countershaft into position, align key with keyway, and press into gear until seated against the** spacer.
6. In a similar way, support the countershaft drive gear with the long hub and chamfer up.
7. Press the countershaft sub-assembly into the gear until it is seated against the third-speed gear.
8. Either a one piece or separable bearings will be found as the rear countershaft bearing. If a separable bearing is used, press on the inner race with flange seated against shoulder of the countershaft. Assemble the snap ring to retain the bearing.

SPECIFICATIONS

APPROXIMATE LUBRICANT REFILL CAPACITY – PINTS

Transmission – Spicer P8516	US	IMP
SAE50 Engine Oil (ESE-M2C39-A)	32	26-1/2

TORQUE LIMITS – FT-LBS

Transmission – Spicer P8516				
Front Unit			**Rear Unit**	
Clutch Housing Locknuts	120-150		Companion Flange Nut	400-450
Countershaft Rear Bearing Retainer	200-250		Countershaft Rear Bearing Retainer	25-32
Countershaft Front Bearing Retainer	40-50		Countershaft Front Bearing Retainer	40-50
Front-to-Rear Case Attaching Capscrews	120-150		Output Shaft Rear Bearing Retainer	60-80
Input Shaft Bearing Retainer	60-80		Shift Fork Attaching Screws	45-50
Input Shaft Locknut	550-600			
Output Shaft Locknut	550-600			
Shift Fork Attaching Screws	45-50			

CC1164-A

PART 16-70 Spicer Auxiliary Transmissions

Applies to All 1973 Models with Auxiliary Transmission

COMPONENT INDEX	Page
MODEL 5831	
Assembly	70-17
Bearing Retainers	
Disassembly and Assembly	70-19
Countershaft	
Disassembly and Assembly	70-19
Disassembly	70-16
Gearshift Housing	
Disassembly and Assembly	70-19
Output Shaft	
Disassembly and Assembly	70-18
MODEL 7041	
Assembly	70-13
Countershaft	
Disassembly and Assembly	70-16
Disassembly	70-12
Input Shaft	
Disassembly and Assembly	70-16
Output Shaft	
Disassembly and Assembly	70-16
MODEL 7231	
Assembly	70-04
Countershaft	
Disassembly and Assembly	70-05
Disassembly	70-03
Gearshift Housing	
Disassembly and Assembly	70-05

COMPONENT INDEX	Page
MODEL 7231 – Contd.	
Input Shaft and Bearing Retainer	
Disassembly and Assembly	70-04
Output Shaft	
Disassembly and Assembly	70-05
MODEL 8031	
Assembly	70-07
Countershaft	
Disassembly and Assembly	70-09
Disassembly	70-05
Gearshift Housing	
Disassembly and Assembly	70-09
MODEL 8341	
Assembly	70-11
Countershaft	
Disassembly and Assembly	70-12
Disassembly	70-10
Gearshift Housing	
Disassembly and Assembly	70-12
SPECIFICATIONS	70-20
TRANSMISSION ASSEMBLY	
Description	70-01
Installation	70-02
Removal	70-02

DESCRIPTION

AUXILIARY TRANSMISSION

Models 5831, 7231 and 8031 are Three-Speed Auxiliary transmissions. Models 7041 and 8341 are four-speed auxiliaries.

All are installed behind the main transmission with remote controls mounted in the cab.

REMOVAL AND INSTALLATION

AUXILIARY TRANSMISSION

ALL MODELS

Removal

1. Position the vehicle so that the auxiliary transmission can be easily reached and drain the lubricant.
2. **Remove the cotter pins and clevis pins from the auxiliary transmission shift rods as follows: Move each shift rod into the forward position, remove the pins and push each shaft to the neutral position.**
3. Disconnect the U-joint at the front of the auxiliary transmission.
4. Disconnect the U-joint at the rear of the auxiliary transmission and tie the drive shaft out of the way.
5. Disconnect the speedometer cable from the transmission. If the speedometer cable cannot be readily disconnected, remove the parking brake drum and linkage, then disconnect the speedometer cable.
6. Remove the parking brake adjusting rod clevis pin and disconnect the parking brake lever to cam connector.
7. Position a transmission jack under the transmission. Fasten the transmission to the jack with the safety chain.
8. Remove the transmission mounting stud or bolt insulator nut cotter pins and nuts. **When studs are used, do not disturb the stud-to-mounting bracket nuts.**
9. Lower and remove the transmission.

Installation

1. Place the transmission on the jack, secure it with the safety chain and roll the jack under the truck.
2. Position the insulators and reinforcements, if used, on the transmission mounting brackets. Raise the transmission into position (Figs. 1 and 2).
3. Install the remaining insulators. Install the retaining nuts and washer. Adjust the auxiliary transmission so that it is paralled to the main transmission within plus or minus 1/2 degree. The coupling shaft between the two transmissions must be parallel to the transmissions from zero degrees to one degree up at the auxiliary transmission end. Notice in Fig. 1 that the two front adjusting bolts and the two rear adjusting bolts must have final adjusting dimensions within 1/8 inch of each other respectively. Torque to specifications. Install the cotter pins.
4. Install the speedometer cable. Torque the cable clip retaining capscrew to 5-7 ft-lbs. If the parking brake drum has been removed, install the drum and linkage. Attach the parking brake connector to the adjusting rod with a clevis pin.
5. Position the drive shaft and connect the rear U-joint.
6. Connect the gear shift connecting rods to the transmission shift rods with clevis pins and new cotter pins.
7. Connect the U-joint at the front of the auxiliary transmission and torque the trunnion bolts to specification.
8. Fill the transmission. Adjust the parking brake and shift linkage if required.

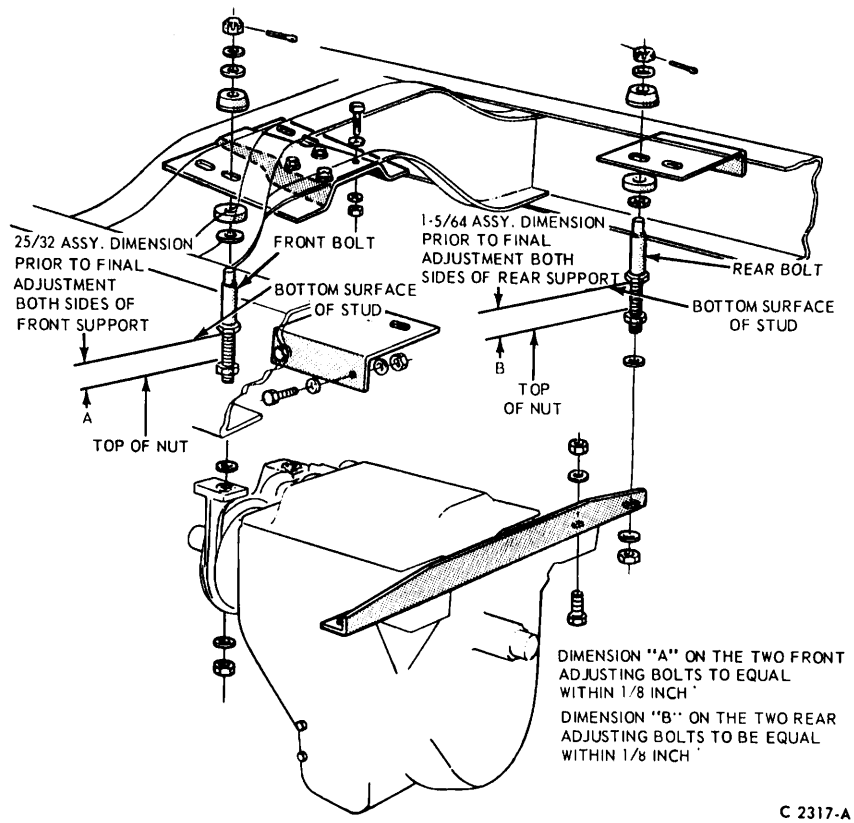

FIG. 1 Transmission Mounting Details

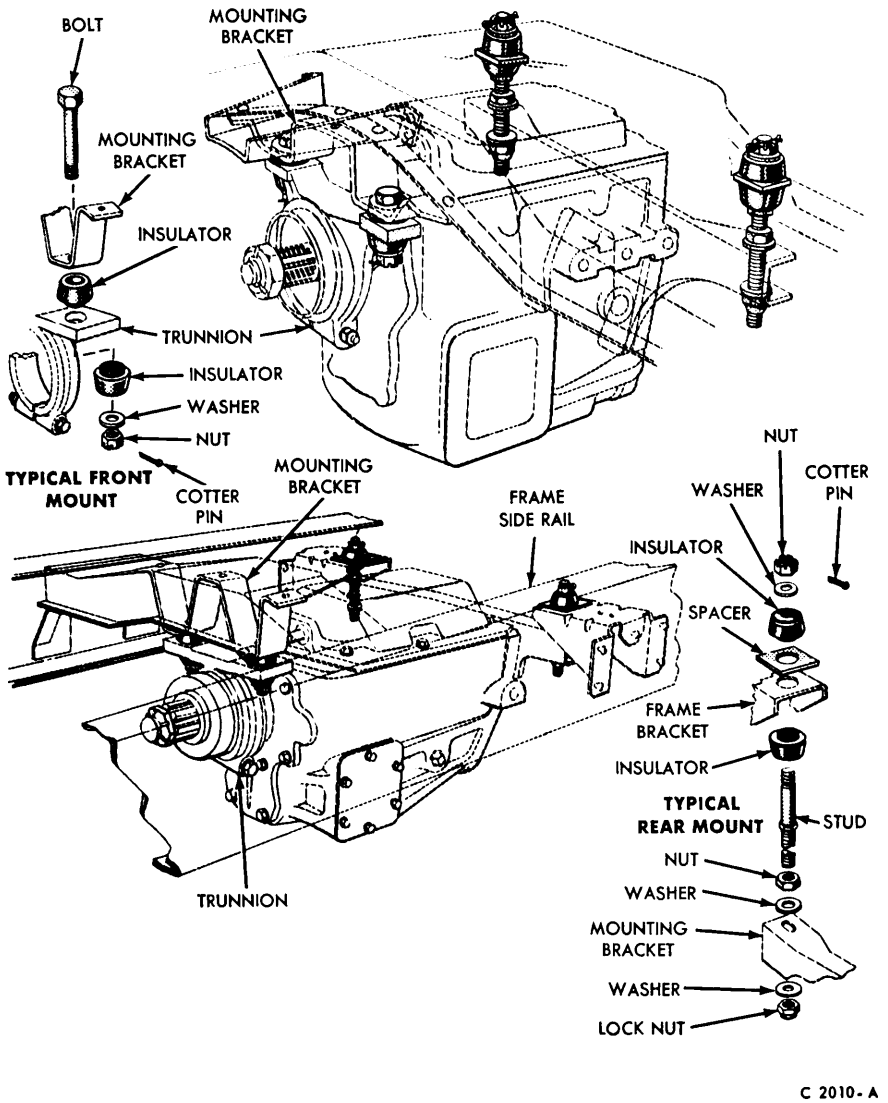

FIG. 2 Transmission Mounting Details—Models 5831 and 7231

DISASSEMBLY AND ASSEMBLY

AUXILIARY TRANSMISSION MODEL 7231

Disassembly

1. Install the transmission assembly in an overhaul stand and remove the gear shift housing.
2. Lock the transmission in two gears, remove the input shaft yoke nut and the yoke.
3. Remove the support from the front bearing retainer.
4. Remove the output shaft flange nut and the flange (and the brake drum).
5. Remove the parking brake shoe assembly from the bearing retainer.
6. Remove the output shaft rear bearing retainer and gasket and remove the speedometer drive gear from the output shaft. Remove the oil seal from the bearing retainer.
7. Remove the countershaft rear bearing cap and shims, keeping the shims together for assembly.
8. Remove the input shaft bearing retainer bolts and lock washers. Remove the retainer and the input

shaft as an assembly (Fig. 3).

9. With a soft hammer, tap the underdrive gear toward the rear of the case until the rear bearing clears the case (Fig. 4). Using Tool CG-300-3, remove the bearing.
10. Remove the underdrive sleeve and the hub through the rear bearing bore and remove the output shaft.
11. With a brass drift and a hammer, drive the countershaft toward the rear of the case until the rear bearing cup is out of the case. Slide the countershaft toward the rear until the front of the shaft clears the front bearing bore and remove the shaft (Fig. 5).
12. With a brass drift, remove the countershaft front bearing cup.

Assembly

Coat all parts with transmission lubricant to prevent scoring when the transmission is first operated.

1. Install the countershaft front bearing cup, using a soft hammer.
2. Lower the rear end of the countershaft into the countershaft rear bearing bore and position the shaft in the case.
3. Install the rear bearing cup.
4. Position the rear bearing cap **without shims** and tighten the bolts.
5. Measure the clearance between the cap and the case. Select a shim (or shims) which will permit countershaft end play of 0.001 to 0.003 inch. After adjustment has been made, torque the bolts to specification.
6. Position the output shaft in the case and slide the hub and the underdrive sleeve onto the shaft.
7. With the rear end of the output shaft extended beyond the rear end of the case, drive the rear bearing onto the shaft.
8. Drive the rear bearing and the output shaft forward until the bearing is firmly seated in its bore.
9. Apply B5A-19554-A sealing compound to the outside diameter of a new output shaft oil seal and install the oil seal, using the tool shown in Fig. 6.
10. Install the speedometer drive gear on the output shaft. Apply B5A-19554-A sealing compound to a new output shaft and rear bearing retainer gasket and install it. Torque the bolts to specification.
11. Install the input shaft and bearing retainer as an assembly. Tighten the bolts securely.
12. Install the parking brake shoe assembly and torque the bolts to specification.
13. Lock the transmission in two gears, position the output shaft flange on the shaft and install the retaining nut. Torque the nut to specification and install a cotter pin.
14. If the brake drum was removed, install it and torque the mounting nuts to specification.
15. Install the support, but do not torque the support bolt.
16. Position the input shaft yoke on the shaft and install the retaining nut. Torque the nut to specification and install a cotter pin.
17. Shift the transmission gears into neutral, apply B5A-19554-A sealing compound to a new gear shift housing gasket and position the gasket on the case.
18. Position the gear shift housing on the transmission case and install the retaining bolts and lock washers.

SUB-ASSEMBLIES MODEL 7231

INPUT SHAFT AND BEARING RETAINER

Disassembly

1. Using the tool shown in Fig. 7, remove the input shaft (with the rear bearing) from the front bearing and retainer.
2. Remove the bearing spacer and press off the rear bearing.
3. Using a soft drift, tap the front bearing and the oil seal out of the bearing retainer.

Assembly

1. Position the rear bearing snap ring on the input shaft.
2. Press the rear bearing onto the input shaft.

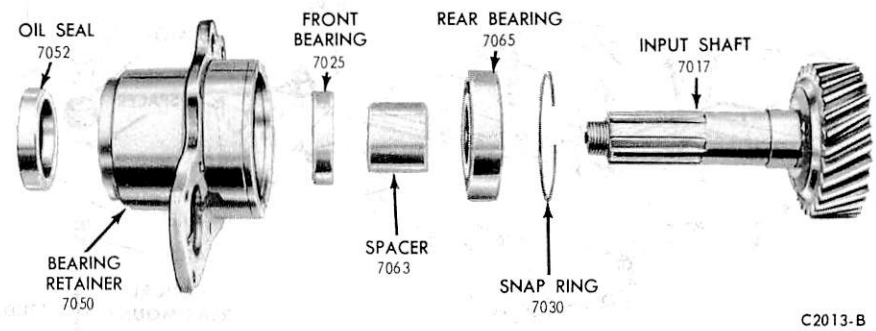

FIG. 3 Input Shaft and Related Parts—Model 7231

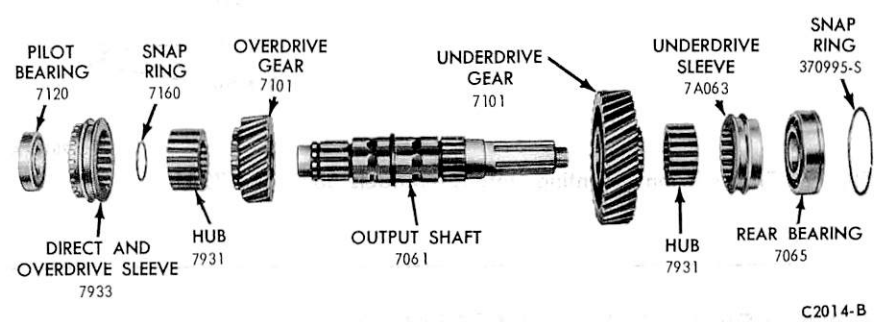

FIG. 4 Output Shaft Disassembled—Model 7231

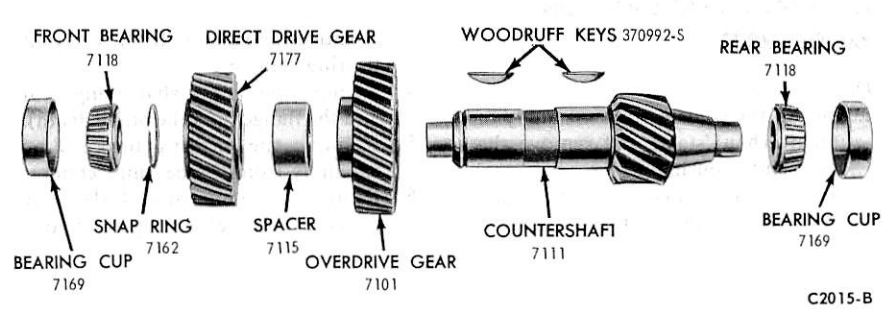

FIG. 5 Countershaft—Disassembled—Model 7231

3. Position the input shaft and bearing in the bearing retainer and install the snap ring in the retainer.
4. Install the spacer on the input shaft.
5. Install the front bearing on the input shaft.
6. Apply B5A-19554-A sealing compound to the outside diameter of a new input shaft oil seal and install the oil seal in the bearing retainer.

OUTPUT SHAFT

Disassembly

1. Slide the underdrive gear off the shaft.
2. Using the direct and overdrive sleeve as a hammer, remove the pilot bearing from the front of the output shaft.
3. Remove the snap ring from the shaft. Remove the hub and the overdrive gear.

Assembly

1. Press the overdrive gear onto the shaft and position the hub on the shaft with the flat side of the hub toward the overdrive gear.
2. Install the snap ring, seating it solidly in the groove.
3. Position the direct and overdrive sleeve on the hub.
4. Install the pilot bearing on the shaft.
5. Slide the underdrive gear onto the shaft.

COUNTERSHAFT

Disassembly

1. Remove the countershaft drive gear snap ring from its groove in the shaft, leaving the ring on the shaft behind the bearing.
2. Position the countershaft in a press and, using a press plate, press the shaft out of the drive gear, the snap ring and bearing.
3. Press the overdrive gear and the spacer off the shaft. The spacer will push the drive gear Woodruff key out of its groove.
4. Using a suitable puller, remove the rear bearing from the shaft.

Assembly

1. Install the overdrive gear Woodruff key. Press the overdrive gear and spacer onto the countershaft.
2. Install the drive gear Woodruff key and press the drive gear onto the shaft. Install the snap ring.
3. Press the front and rear bearings onto the countershaft.

GEAR SHIFT HOUSING

Disassembly

1. Remove the shift rod spring and ball plug from the side of the housing. Remove the spring and ball.
2. Remove the lock wire and set screw from the direct and overdrive shifter fork. Slide the direct and overdrive shifter shaft out of the front of the housing and remove the shift rod. Remove the plunger from the housing.
3. Remove the lock wire and set screw from the underdrive shifter fork. Pull the underdrive shift rod out of the front of the housing and remove the shifter fork. Remove the ball and spring from the housing.
4. If the oil seals in the front of the housing are damaged or cause oil leaks, remove the seals from the cover.

Assembly

1. Place the housing in a vise with the plunger spring and ball opening in the housing at the top. Dip the spring in transmission lubricant and position it in the housing.
2. **Place one of the shift rod balls on top of the spring. Insert the underdrive shift rod (longer shaft) through the front of the housing. Hold the ball down and push the shift rod through the center support. The notches in the rod must be indexed with the ball.**
3. Pull the shift rod back far enough to permit installation of the underdrive shifter fork. Install the fork on the shaft. **With the longer hub of the fork toward the front of the housing, align the lock screw hole in the fork with the lock screw recess in the shift rod. Install the lock screw, tighten it solidly and install a new lock wire. Shift the rod and fork assembly to neutral position.**
4. Insert the plunger in the cross hole in the cover. Insert the direct and overdrive shift rod into the housing. Position the direct and overdrive shifter fork on the rod and slide the rod through the center support. Align the lock screw hole in the shifter fork with the lock screw recess in the shift rod and install the lock screw. Secure the lock screw with a new lock wire.
5. **Install the shift rod ball, dip the spring in new transmission lubricant and position the spring on top of the ball. Secure the spring with the retaining plug. Tighten the plug.**
6. If the housing shifter shaft oil seals were removed, place the new oil seals, dipped in transmission lubricant, over the front ends of the two shifter shafts with the lips of the seals toward the rear of the cover. Press them carefully into place. Make certain the lips of the seals are not damaged during installation. Shift the direct and overdrive shifter shaft and fork assembly to the neutral position.

MODEL 8031

Disassembly

1. Remove the gearshift housing and install the transmission assembly in the overhaul stand.
2. Lock the transmission in two gears and remove the input and output shaft U-joint flanges by removing the nuts and using a companion flange puller to remove the flanges from the shafts.
3. Remove the support.
4. Remove the front bearing retainer cap (Fig. 8) and gasket.
5. Remove the lock washers from the retainer cap bolts and install the retainer cap (without washers) as shown in Fig. 9.

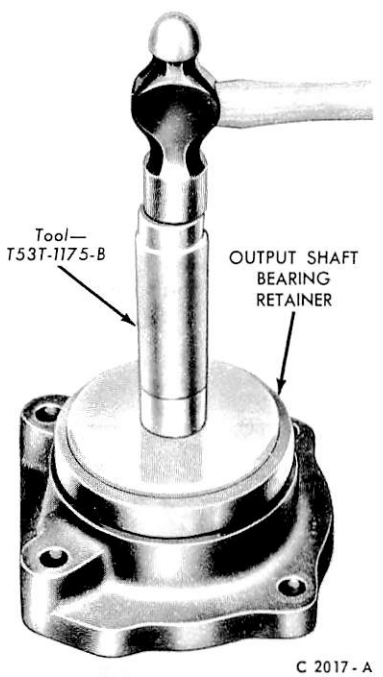

FIG. 6 Installing Output Shaft Rear Oil Seal—Model 7231

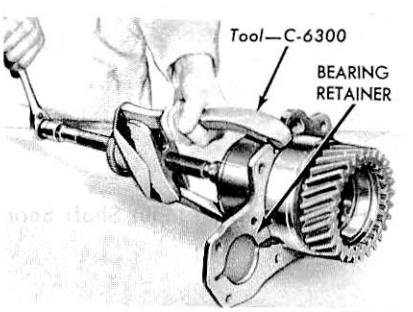

FIG. 7 Removing Input Shaft Bearing—Model 7231

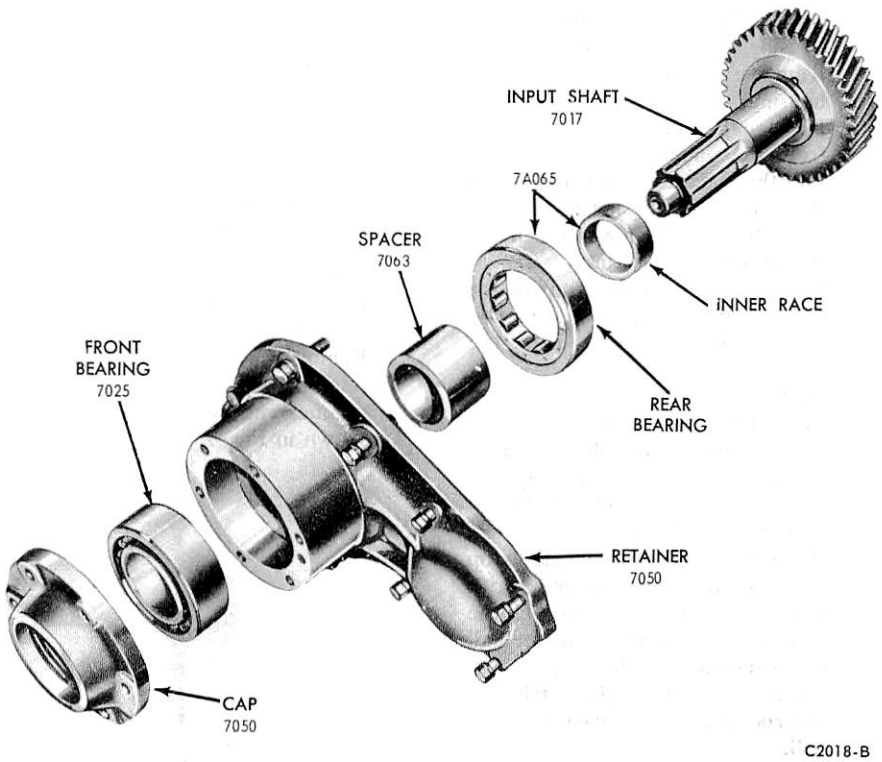

FIG. 8 Input Shaft and Related Parts—Model 8031

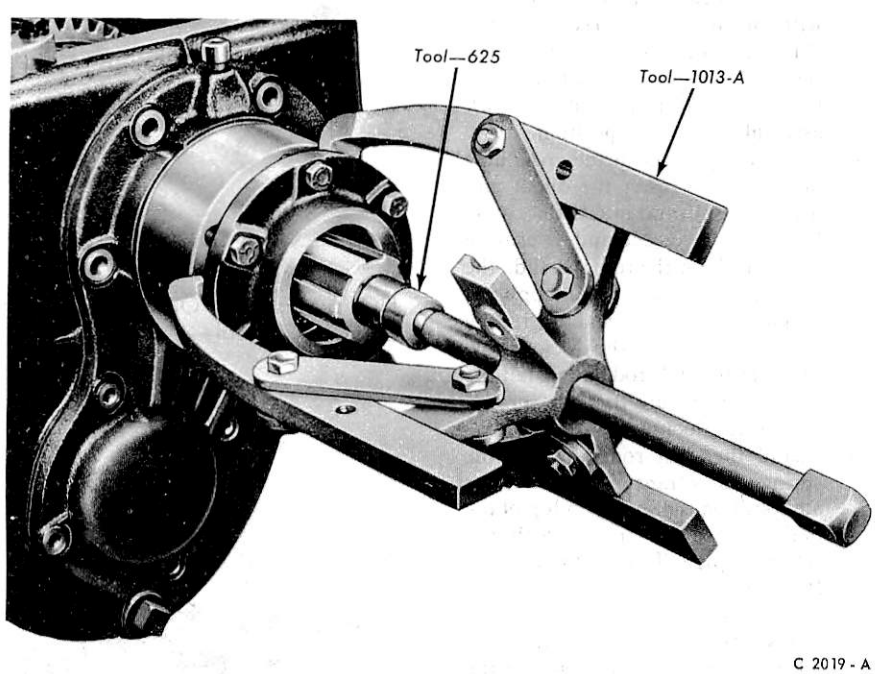

FIG. 9 Removing Input Shaft Bearing Retainer—Model 8031

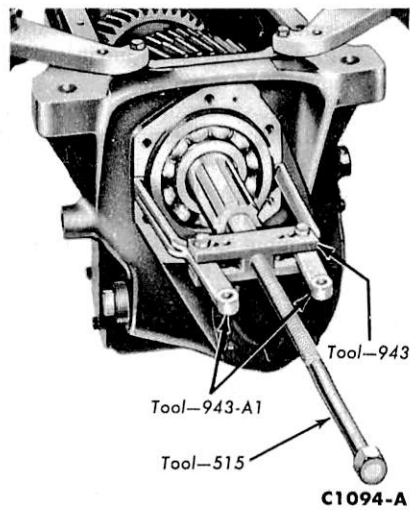

FIG. 10 Removing Output Shaft Rear Bearing—Model 8031

6. After removing the bolts from the retainer, remove the retainer and front bearing as shown in Fig. 9. remove the cap and tap the front bearing out of the retainer.
7. Remove the parking brake shoe plate. Remove the output shaft bearing retainer, the speedometer drive gear and the rear bearing flat washer.
8. Slide the output shaft assembly toward the rear of the transmission until the rear bearing has enough clearance for a standard bearing puller to be placed on the snap ring of the bearing. Pull the bearing off the output shaft (Fig. 10).
9. Remove the second and third-speed clutch gear lock washer and nut by unlocking the tang on the lock washer. Hold the nut with a spanner wrench while rotating the output shaft until the nut is removed from the shaft.
10. Install the nut and puller on the rear of the output shaft and pull the output shaft out through the rear of the case (Fig. 11).
11. Remove the output shaft nut, lock washer, flat washer, second and third-speed clutch gear and clutch collar, output shaft overdrive gear and sleeve, and the output shaft first-speed gear through the gear shift cover opening. The needle roller bearings in the first-speed gear will fall out when removing the output shaft.
12. Remove the first-speed clutch gear and collar from the output shaft.

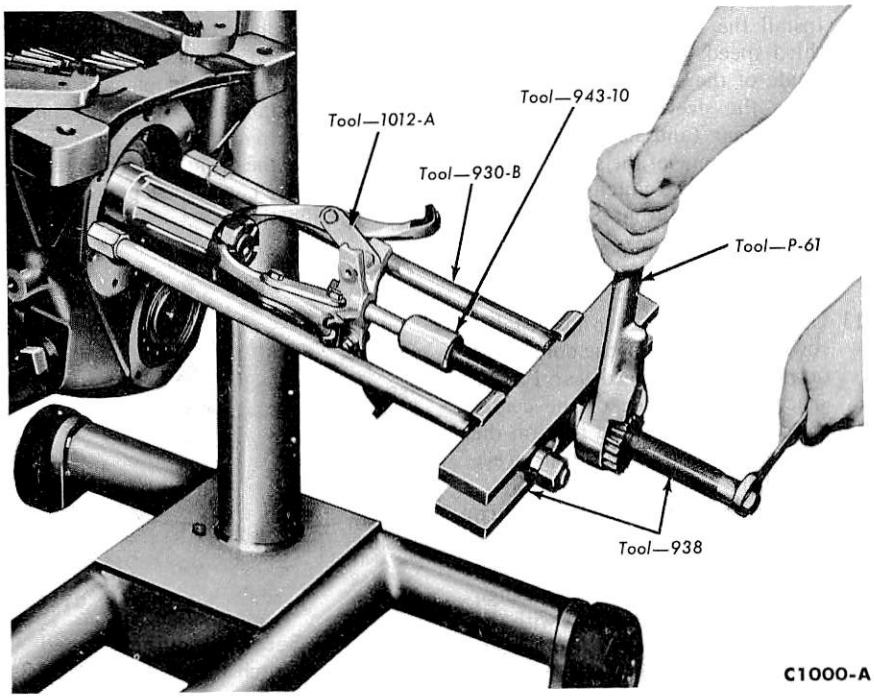

FIG. 11 Removing Output Shaft—Model 8341

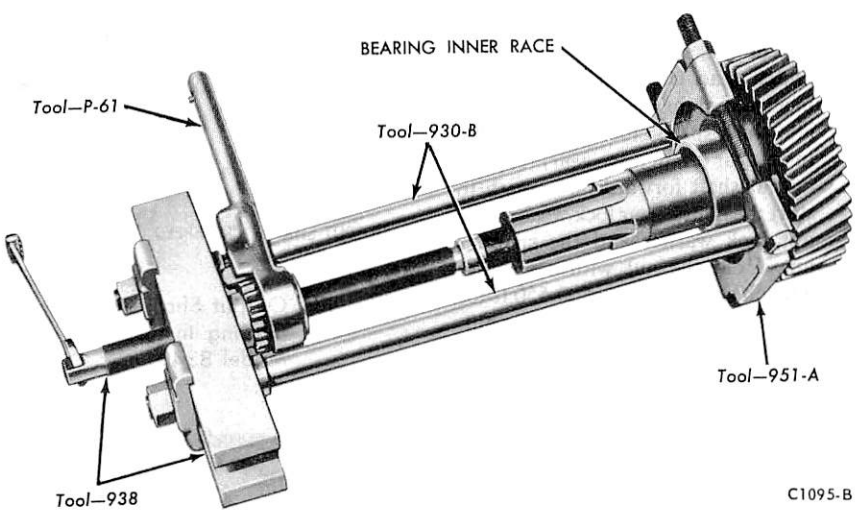

FIG. 12 Removing Input Shaft Rear Bearing Inner Race—Model 8341

13. Remove the input shaft and bearing out through the gear shift cover opening and remove the output shaft front pilot bearing from the input shaft and gear.
14. Remove the roller bearing and bearing spacer from the input shaft. Remove the inner bearing race from the input shaft using the tools shown in Fig. 12.
15. Remove the countershaft front bearing retainer washer and the rear bearing cap and gasket.
16. **Using the tool shown in Fig. 13, press the countershaft toward the rear until the shaft is free from the front bearing and the rear bearing is out of the case.**
17. Remove the countershaft rear bearing snap ring from the rear of the countershaft.
18. Using the tool shown in Fig. 14, remove the rear bearing from the shaft. Remove the front bearing from the case.
19. Remove the countershaft from the case, front end first, through the gear shift cover opening (Fig. 15).

Assembly

1. With the aid of a suitable sling (Fig.

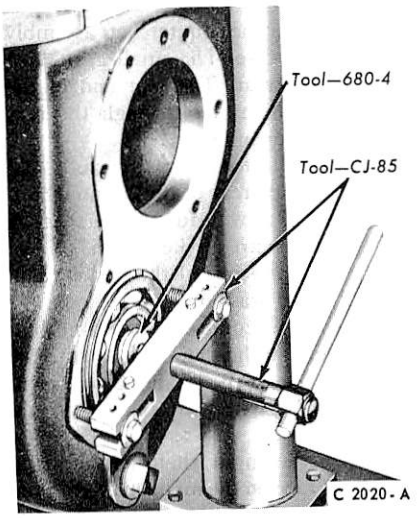

FIG. 13 Removing Countershaft—Model 8341

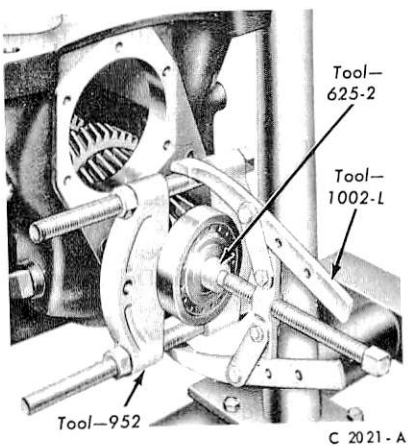

FIG. 14 Removing Countershaft Rear Bearing—Model 8341

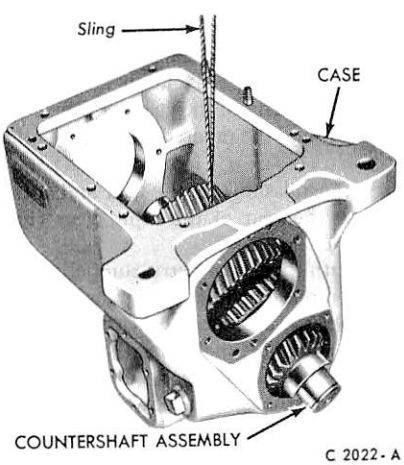

FIG. 15 Removing or Installing Countershaft—Model 8341

15), lower the countershaft assembly into the case. The small gear must face the rear. The rear end of the shaft will extend through the rear bearing opening.

2. Install the roller bearing and snap ring on the rear of the countershaft. Coat a new countershaft rear bearing cap gasket with gasket cement and install the gasket, cap, bolts and washers.
3. Place the countershaft front ball bearing on the shaft and tap into the case. Secure the retaining washer to the shaft with two capscrews and lock wire.
4. Press the input shaft rear bearing inner race on the input shaft with the flanged end of the race toward the gear. Use a suitably sized tube as an arbor.
5. Place the outer race and roller bearing assembly in the bore of the case and slide the gear into the bearing from the inside of the case.
6. Set the output shaft front pilot bearing into the rear of the input shaft. The flanged side of the inner race must face the rear. Tap the bearing in place.
7. Install the bearing spacer on the front of the input shaft. Coat a new gasket with gasket cement and install the gasket, bearing retainer, bolts and washers. Do not tighten the bolts (Fig. 8).
8. Insert the double row ball bearing and the dirt and oil deflector. Coat a new front cap gasket with gasket cement and install the gasket and cap. Install the cap bolts and washers but do not tighten them.
9. **Install the drive flange or yoke on the input shaft. Start the washer and nut. The nut cannot be tightened until the output shaft is assembled.**
10. Position the transmission, front down. Install the second and third-speed clutch gear into the second and third-speed clutch collar. The ground end of the gear must face the rear and the tapered end of the collar must face the front of the transmission. Set the gear and collar on the rear of the input gear (Fig. 16).
11. With the aid of petroleum jelly, or a comparable viscosity grease, install two rows of needle bearings inside the output shaft third-speed gear. Each row will consist of 62 needles. Place the spacer between the two rows. A spacer, slightly greater than the diameter of one needle, will exist in each row when all the needles are in place (Fig. 17).
12. Install the pin in the wall of the third-speed gear sleeve from the inside of the sleeve bore (Fig. 17). Place the sleeve inside the third-speed gear (and needle bearings) with the flange of the sleeve toward the rear and the clutch teeth of the gear toward the front. Set the sleeve and gear on the rear of the second and third-speed clutch gear (Figs. 17 and 18).
13. Using grease, as in Step 11, install 3 rows of 62 needles in the bore of the output shaft first-speed gear. Place a spacer on each side of the center row. Set the first-speed gear on the rear of the third-speed gear sleeve (Fig. 19).
14. **Inspect the output shaft for dirt, damage and burrs. Coat the shaft lightly with oil and slide it through the stacked gears and sleeve. Align the long spline on the shaft with the pin in the third-speed gear sleeve. When the shaft has entered the second and third-speed clutch gear, turn the transmission so the cover opening is facing up (Fig. 20).**
15. **Move the output shaft gears and shaft as far to the rear of the case as possible without pulling the shaft out of the second and third-speed clutch gear.** Use fiber or hardwood blocks as shims between the second and third-speed clutch gear and the input gear (main drive gear). Tap the output shaft forward far enough to start the clutch gear lock washer, the nut lock washer and the spanner nut. Hold the nut with a spanner wrench and tighten to 500-550 ft-lbs by turning the output shaft rear nut. Align a slot of the spanner nut with a tang of the lock washer and bend the tang into the slot. The output shaft rear nut may be removed before the cover is installed by locking the transmission in two gears.
16. With the fiber or hardwood shims in place between the input gear and the clutch gear, install the first-speed clutch gear and collar onto the rear of the output shaft. The gear hub must be toward the rear and the long hub of the collar must be toward the front. Tap firmly into place.
17. Install the rear bearing (snap ring to rear). Remove the shims from the front of the output shaft and tap the output shaft and rear bearing forward into place. Be sure the front of the output shaft enters the pilot bearing easily.
18. Place the flat washer on the rear of the output shaft rear bearing. Install the speedometer gear on the output shaft. Coat a new rear gasket with gasket cement and place it on the case. Install the rear bearing retainer and the parking brake shoe plate. Torque the front and rear bearing retainer and cap bolts to specifications.

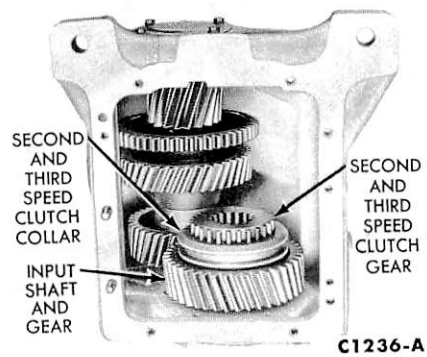

FIG. 16 Second and Third-Speed Clutch Installation—Model 8341

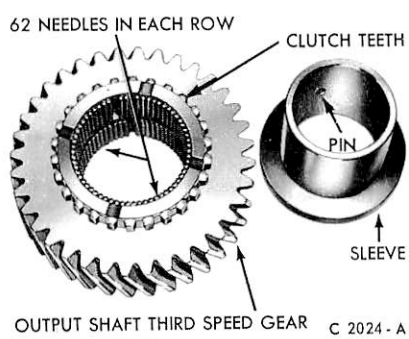

FIG. 17 Output Shaft Third-Speed Bearing Installation—Model 8341

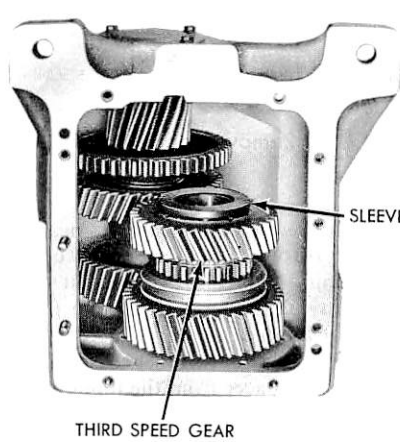

FIG. 18 Output Shaft Third-Speed Gear Installation—Model 8341

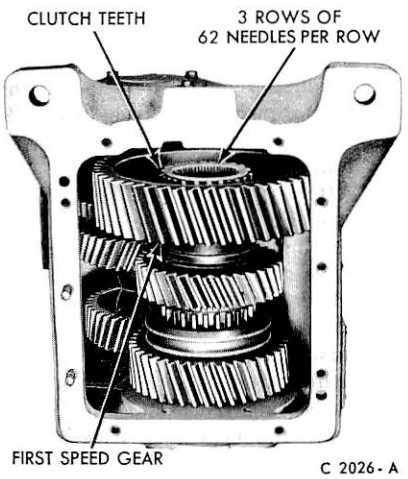

FIG. 19 Output Shaft First-Speed Gear Installation—Model 8341

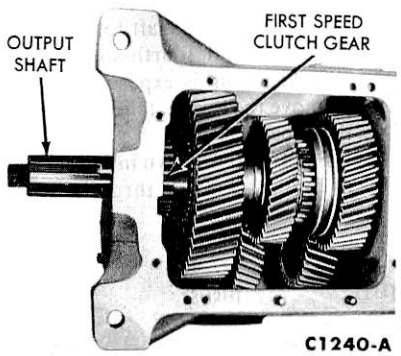

FIG. 20 Output Shaft Installation—Model 8341

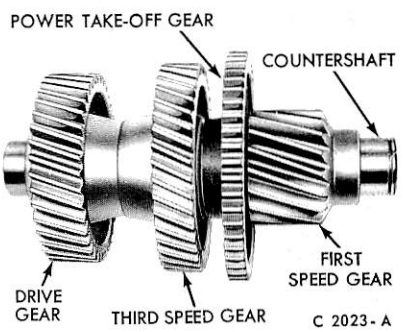

FIG. 21 Countershaft Assembly—Model 8341

19. Install the front and rear companion flanges and torque to specifications.
20. Coat a new cover gasket with gasket cement and install it and the cover. Be sure the shift forks are aligned with the shift collars in the transmission.
21. Install the support on the front bearing retainer, but do not tighten the locking nut and bolt.

SUB-ASSEMBLIES—Model 8031

COUNTERSHAFT

Disassembly

Mark the gears to show their position and sequence before removal (Fig. 21). Gears may be removed from the countershaft by supporting each gear separately on an arbor and pushing the countershaft out of the gear.

Assembly

Inspect the gear teeth, bores and shaft for wear, damage and rough surfaces. Inspect the keys and keyways for cracks, burrs or metal displacement.

1. Place the power take-off gear and key in position (long gear hub toward front). With a suitable arbor, press the power take-off gear firmly against the 1st speed gear (Fig. 21).
2. Insert the 3rd speed overdrive gear key and position the gear with the long hub facing the front of the shaft. Use a proper size arbor and press the gear into position.
3. Following the above procedure, install the drive gear (long hub toward the rear of the shaft).

GEAR SHIFT HOUSING

Disassembly

1. After cutting and removing the safety wires, remove the shift fork retaining bolts (Fig. 22).
2. Remove the retaining plug from the outside of the housing. Remove the spring, lock plunger pin and poppet ball.
3. After shifting the high speed shift rod to neutral position, remove the 1st speed shift rod from the cover and remove the 1st speed shift fork. Remove the shift rod interlock pin.
4. Remove the 2nd and 3rd speed shift rod from the cover and remove the 2nd and 3rd speed shift fork. Remove the 2nd and 3rd speed shift rod poppet ball, plunger and poppet spring.
5. If the oil seals in the front of the housing are damaged or leaking, pry the seals from the cover.

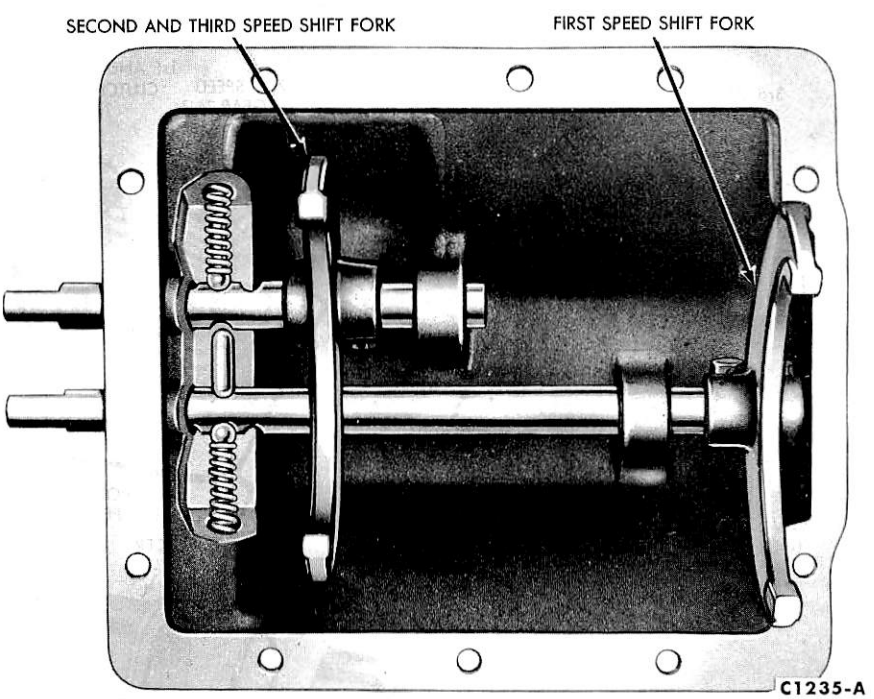

FIG. 22 Gear Shift Housing—Model 8031—Model 8341

Assembly

1. Place the shift housing upside down in a vise. Check the shift rods to make sure that they are a free sliding fit in the shift cover.
2. Dip the 2nd and 3rd speed shift rod spring in new transmission lubricant and install the spring, plunger and poppet ball in the housing.
3. **Install the 2nd and 3rd speed shift rod into the gear shift housing. Hold the poppet ball down and slide the shaft through the shift cover boss (Fig. 22).**
4. **Place the 2nd and 3rd speed shift fork on the shift rod with the long hub of the fork toward the front of the housing. Slide the shift rod through into neutral position. Align the screw holes in the fork with the notches in the shift rod. Install the two screws and lock wire the heads.**
5. Install the shift rod interlock pin.
6. Install the 1st speed shift rod into the gear shift housing and place the 1st speed shift fork on the shift rod with the long hub toward the front. Align the shift fork screw holes with the notches in the shift rod. Install the two screws and lock wire the heads.
7. Install the low speed shift rod poppet ball and plunger. Dip the spring in new transmission lubricant and position the spring on the top of the plunger. Secure the spring with the retaining plug. Tighten the plug solidly. Shift the low speed shift rod into neutral.
8. **If the housing shift rod oil seals were removed, dip new oil seals in transmission lubricant and place them on the front end of the shift rods with the lips of the seals facing inward (rear). Press them carefully into place. Make certain the lips of the seals are not damaged during installation.**

MODEL 8341

Disassembly

1. Remove the rear shift housing and gasket and mount the transmission in an overhaul stand.
2. Lock the transmission in two gears and remove the flange (and drum) from the output shaft.
3. Remove the input shaft U-joint flange and remove the dust deflector.
4. Remove the support.
5. Remove the front bearing retainer cap (Fig. 9) and gasket.
6. Remove the lock washers from the retainer cap bolts and install the retainer cap **(without washers)** as shown in Fig. 10.
7. After removing the bolts from the retainer, remove the retainer and front bearing as shown in Fig. 9. Remove the cap and tap the front bearing out of the retainer.
8. After removing the brake shoe assembly, remove the output shaft bearing retainer, the speedometer drive gear and the first-speed gear spacer washer (Fig. 23).
9. After sliding the input shaft as far forward as possible, tap the output shaft forward to start the shaft out of its bearing. Then slide the output shaft and bearing rearward until there is clearance for a standard bearing puller. Pull the bearing from the shaft (Fig. 10) and then remove the first-speed gear thrust washer.
10. Position fiber or hardwood blocks about one-inch thick between the input shaft and the third and fourth-speed clutch gear (Fig. 24).
11. Using the tool shown in Fig. 24, press the output shaft forward until the third and fourth-speed clutch gear lock ring is exposed (Fig. 25). Remove the two matched halves and the blocks.
12. Using the tool shown in Fig. 11, pull the output shaft out through the rear of the case.

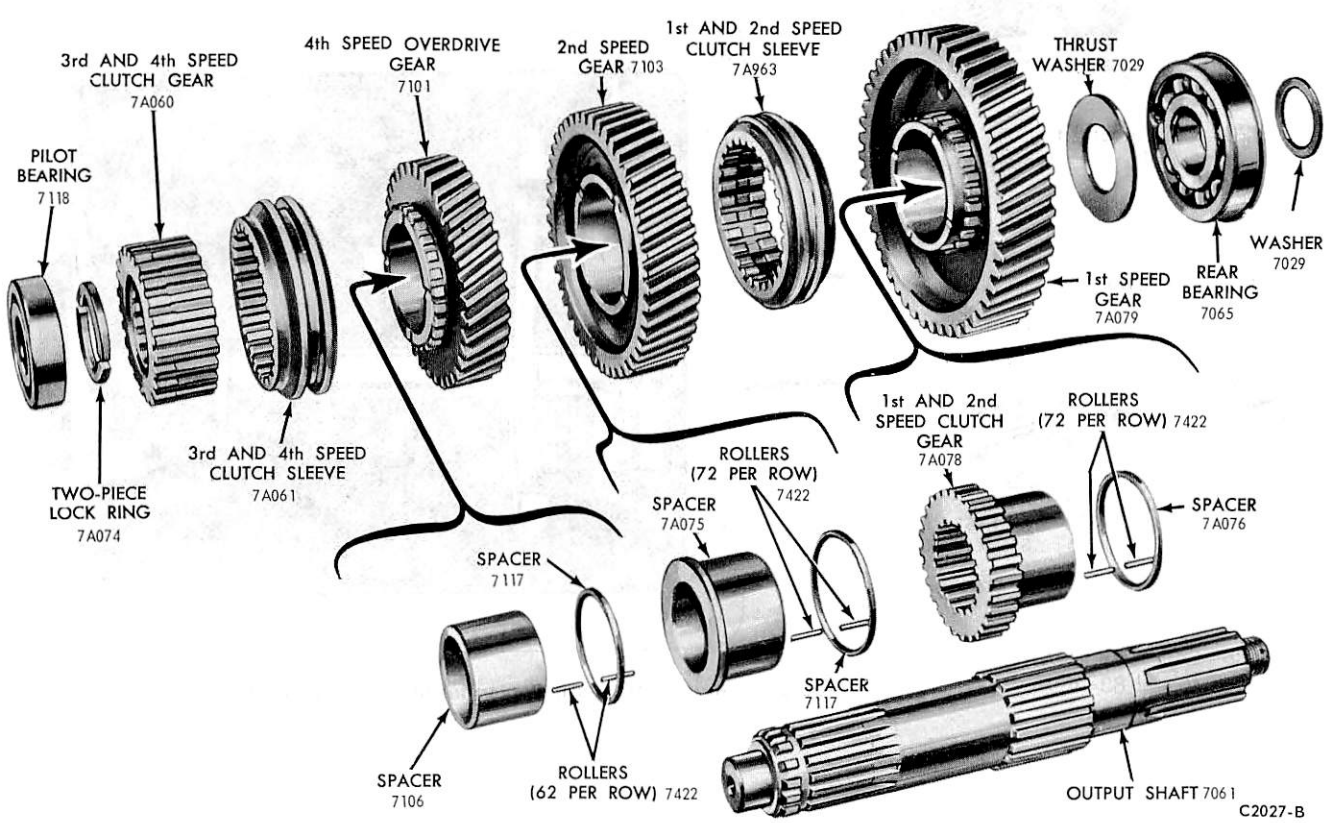

FIG. 23 Output Shaft—Disassembled—Model 8341

13. Remove the output shaft components from the case. Note that there are double rows of bearing rollers in the first, second and fourth-speed gears (Fig. 23).
15. Remove the input shaft through the top of the case and remove the pilot bearing from the input shaft. Remove the sleeve and the rear bearing inner race from the shaft. Use the tool shown in Fig. 12 to remove the inner race.
16. Remove the input shaft rear bearing from its bore in the case.
17. Remove the countershaft front bearing retainer washer (Fig. 26) and the rear bearing cap and gasket.
18. Using the tool shown in Fig. 21, press the countershaft toward the rear until the shaft is freed from the front bearing and the rear bearing is out of the case.
19. Using a standard puller (Fig. 14), remove the rear bearing from the shaft. Remove the front bearing from the case.
20. Remove the countershaft from the case, front end first.

Assembly

1. After positioning the countershaft in the case, use a suitable bearing driver to install the rear bearing on the shaft and in the case bore.
2. **Apply B5A-19554-A sealer to a new gasket, install the rear bearing cap and torque the bolts to specification. Be sure the oil drain is positioned at the bottom and safety wire the bolts.**
3. Using a suitable installer, drive the front bearing into position and install the retainer washer. Torque the bolts to specification and install the lock wire.
4. Using a suitable installer and positioning the flanged side of the inner race to the rear, press the inner race of the input shaft rear bearing onto the input shaft.
5. Position the outer race of the rear bearing in the case bore.
6. After positioning the input shaft in the case, position the pilot bearing (with the flanged end of the inner race to the rear) in the input shaft.
7. **After coating the bore of the first-speed gear with thick grease, position the rollers and the spacer (Fig. 23). Note that there must be 72 rollers in each row. Then carefully position the first and second-speed clutch gear inside the first-speed gear, with the clutch gear teeth to the front.**
8. After coating the bore of the second-speed gear with thick grease, position the rollers and the ring type spacer (Fig. 23). **Note that there**

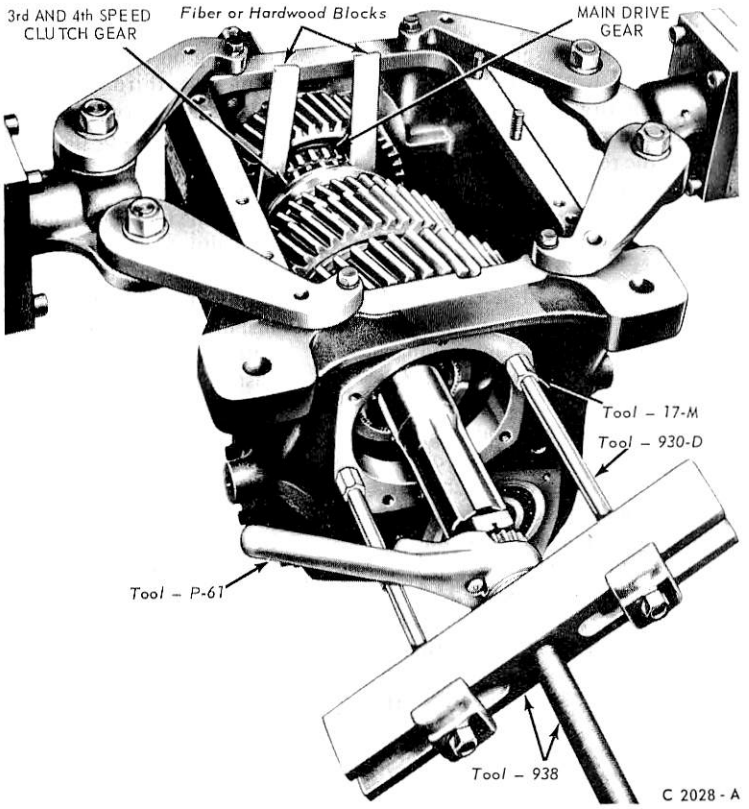

FIG. 24 Pressing Output Shaft Forward—Model 8341

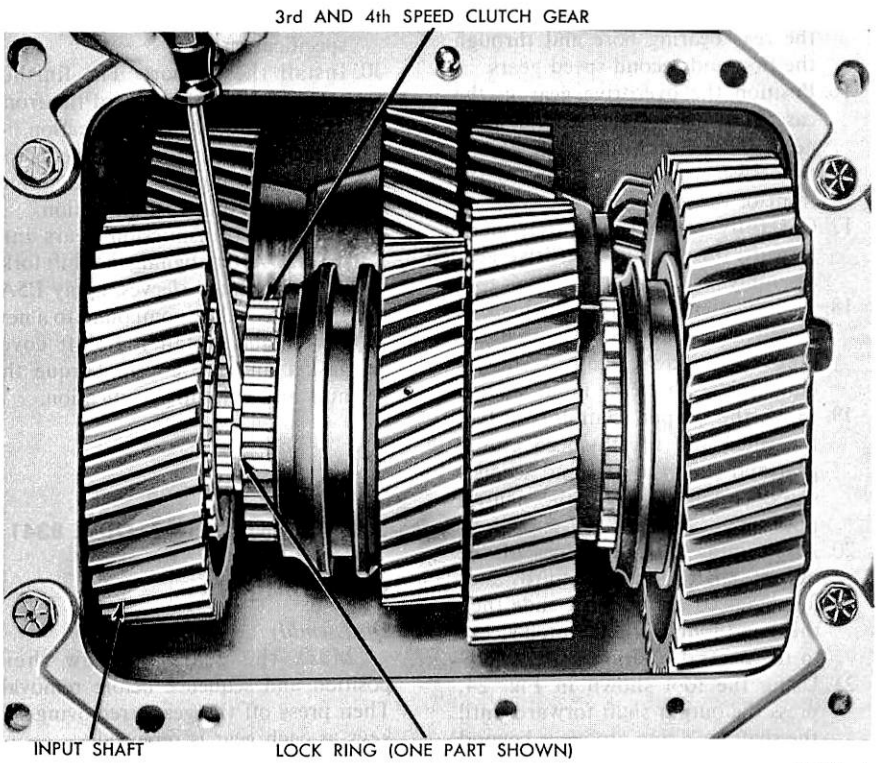

FIG. 25 Third and Fourth-Speed Clutch Gear Lock Ring—Model 8341

must be 72 rollers in each row. Then carefully insert the sleeve-type spacer inside the gear with the spacer flange to the front.

9. After coating the bore of the overdrive gear with thick grease, position the rollers and the ring-type spacer. **Note that there must be 62 rollers in each row.** Then carefully insert the sleeve-type spacer inside the gear.
10. Position the first and second-speed clutch sleeve on the first and second-speed clutch gear. **The longer hub of the sleeve must be toward the first-speed gear.**
11. Position the third and fourth-speed clutch sleeve on the splines of the third and fourth-speed clutch gear. **The longer hub of the sleeve must be toward the clutch gear end that is recessed for the lock ring.**
12. Position the first-speed gear assembly in the rear of the case. The clutch gear teeth must be toward the front of the case.
13. Position the second-speed gear assembly next to the first and second-speed clutch gear. The clutching teeth of the second-speed gear must be toward the first-speed gear.
14. Line up the two gears by sliding the first and second-speed clutch sleeve forward over the clutching teeth of the second-speed gear.
15. Position the output shaft through the rear bearing bore and through the first and second-speed gears.
16. Position the overdrive gear in the case and next to the second-speed gear. The clutching teeth of the overdrive gear must be toward the front of the case.
17. Carefully move the output shaft forward through the overdrive gear assembly.
18. Position the third and fourth-speed clutch gear and sleeve so that the sleeve can be engaged in the clutching teeth of the input shaft.
19. Move the output shaft forward to the third and fourth-speed clutch gear and slide the first and second-speed clutch sleeve to the neutral position.
20. After lining up the splines of the output shaft and the third and fourth-speed clutch gear, slide the third and fourth-speed clutch sleeve to the neutral position.
21. Using the tool shown in Fig. 24, press the output shaft forward until the shaft lock ring groove is beyond the third and fourth-speed clutch gear. Remove the blocks.
22. After coating the lock ring with heavy grease, position both parts of the ring on the shaft.
23. Slide the third and fourth-speed clutch gear forward and make sure that both parts of the lock ring will center inside the counterbore of the clutch gear.
24. Using the tool shown in Fig. 11, pull the output shaft rearward until the components are drawn into position.
25. Using a suitable bearing driver, install the output shaft rear bearing with the snap ring groove to the rear. Install the spacer washer and the speedometer drive gear.
26. Apply B5A-19554-A sealing compound to a new gasket, install the rear bearing retainer and torque the retaining bolts to specification. Install the lock wire and install the brake shoe assembly.
27. Lock the transmission in two gears and install the output shaft flange (and drum). Torque the nut to specification.
28. Position the input shaft sleeve on the shaft, apply B5A-19554-A sealing compound to a new gasket and install the bearing retainer gasket and the retainer. Torque the bolts to specification.
29. Position the front bearing in the retainer, apply B5A-19554-A sealing compound to a new gasket and install the bearing cap and gasket. Torque the bolts to specification.
30. Install the support. The finished surface should be toward the front. Torque the bolt to specification.
31. After positioning the dust deflector, install the input shaft flange and torque the nut to specification.
32. Shift the transmission gears into neutral. After aligning the shift forks with the clutch sleeves, apply B5A-19554-A sealing compound to a new gasket and install the shift cover gasket and the cover. Torque the nuts and bolts to specification.

SUB ASSEMBLIES—MODEL 8341

COUNTERSHAFT

Disassembly

Mark the gears to show their position and sequence before removal. Then press off the gears, removing the keys as each gear is removed.

Assembly

Press on the gears, **installing the keys as the gears are installed.**

GEAR SHIFT HOUSING

Disassembly

1. After cutting the safety wires, remove the shift fork retaining bolts.
2. Remove the retaining plug from the outside of the housing. Remove the spring, poppet ball and lock plunger pin (Fig. 27).
3. After shifting the third and fourth-speed shift rod to neutral position, remove the first-speed shift rod, the shift rod sleeve, the interlock pin and the shift fork.
4. Remove the third and fourth-speed shift rod, the shift fork, the spring, ball and lock plunger pin.
5. If the oil seals in the front of the housing are leaky, drive them out with a small chisel or punch.

Assembly

1. Position the third and fourth-speed ball spring in its bore, then the lock plunger pin.
2. Position the poppet ball on the pin, then start the shift rod into its bore. Position the rod so that the ball will engage one of the three equally spaced notches (Fig. 27).
3. Using a screwdriver, depress the ball far enough to start the rod over the ball, then tap the rod in about two inches.
4. After positioning the shift fork, push the rod to its neutral position and install the fork retaining bolts. Install the lock wire.
5. After positioning the interlock pin, position the first and second-speed shift rod, the sleeve and the shift fork.
6. Install the fork retaining bolts and the lock wire.
7. Install the first and second-speed poppet ball, lock plunger pin, spring and the retaining plug.
8. If necessary, install new oil seals in the shift rod bores, using a suitable installer to avoid damaging the seals.

MODEL 7041

Disassembly

1. Remove the transmission cover (Fig. 28) from the case.
2. Shift the transmission into neutral.
3. Remove the 2 detent spring retainer plugs from the right side of the case (Fig. 28) and remove the detent springs and balls.
4. Cut the lock wire and remove the lock screw from the first and second-speed shift fork. Pull the first and

second-speed shift rod out the front of the case. Remove the fork.

5. Cut the lock wire and remove the lock screw from the third and fourth speed shift fork. Pull the shift rod out of the front of the case and remove the fork.
6. Remove the interlock plunger from the interlock bore in the case.
7. Engage both sliding clutch sleeves to lock the input and output shafts.
8. Pull the cotter pins and remove the input and output shaft flange retaining nuts and flat washers.
9. Remove the input and output shaft flanges with a suitable puller.
10. Remove the input shaft bearing retainer-to-case attaching bolts.
11. Use puller screws to remove the input shaft bearing retainer and the input shaft and gear from the main case.
12. Remove the output shaft bearing retainer and gasket.
13. Remove the speedometer drive gear and spacer.
14. Remove the output shaft bearing with a suitable puller. Remove the first-speed gear thrust washer.
15. Remove the third and fourth-speed sliding clutch sleeve (Fig. 29).
16. Remove the remainder of the output shaft assembly out through the top of the case.
17. Remove the countershaft rear bearing retainer and shims. With a micrometer, measure the shim pack and tag the total shim pack thickness.
18. Tap the countershaft rearward until the countershaft rear bearing cup can be removed from the main case.
19. Tilt the front of the countershaft assembly upward and remove it through the top of the case.
20. Remove the countershaft front bearing cup from the case.

Assembly

1. Install the assembled (front and rear bearing cones installed) countershaft into the main case.
2. Install the rear bearing cup in the countershaft rear bearing bore in the main case.
3. Install the front bearing cup in the countershaft front bearing bore in the main case.
4. Adjust the countershaft bearing end play (preload) as follows:
   a. Install the front bearing retainer and gasket.
   b. Install the rear bearing retainer with a trial shim pack.
   c. Adjust the shim pack so that a 0.001 to a 0.003 inch end play is obtained on the countershaft bearings. In each trial, the bearing retainer bolts must be at proper torque. Also, the shaft must be rotated several times in each direction to seat the rollers before a final preload and/or end play check is made.
   d. After the end play and/or preload has been established, remove the front bearing retainer.
5. Place the output shaft assembly in the case.
6. Slide the first-speed gear thrust washer over the rear end of the output shaft.
7. With a suitable tool, press the output shaft rear bearing onto the shaft and into the case. The snap ring groove on the bearing OD goes to the rear.

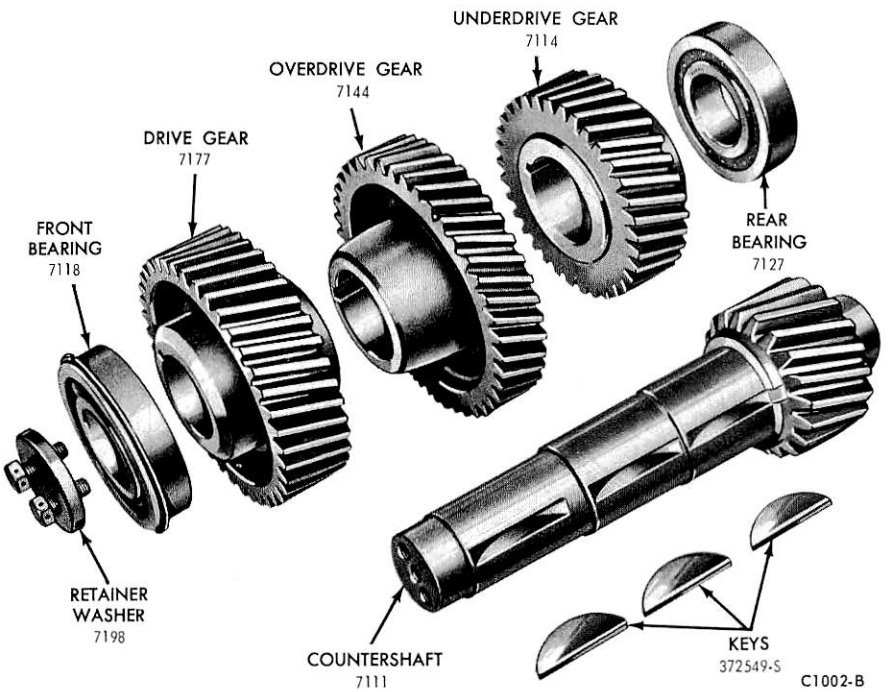

FIG. 26 Countershaft and Gear—Model 8341

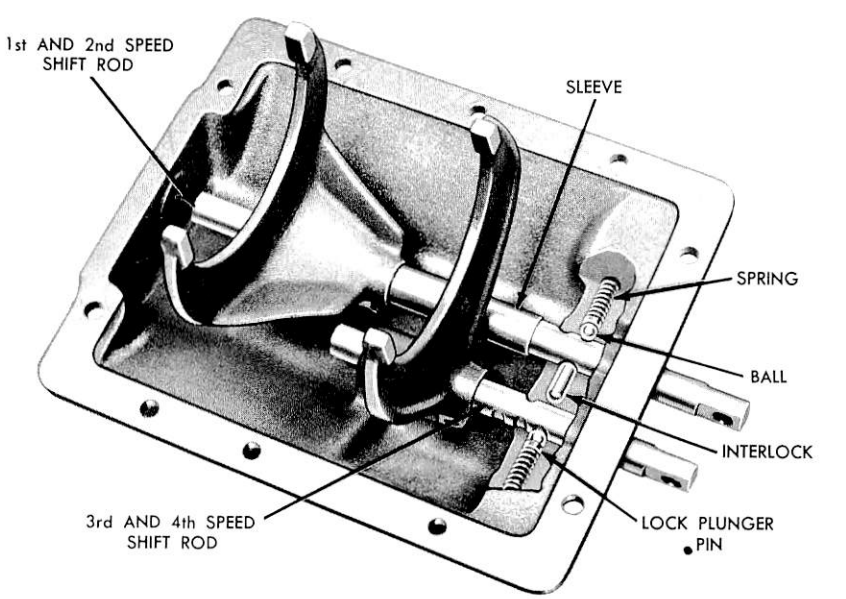

FIG. 27 Gear Shift Housing—Model 8341

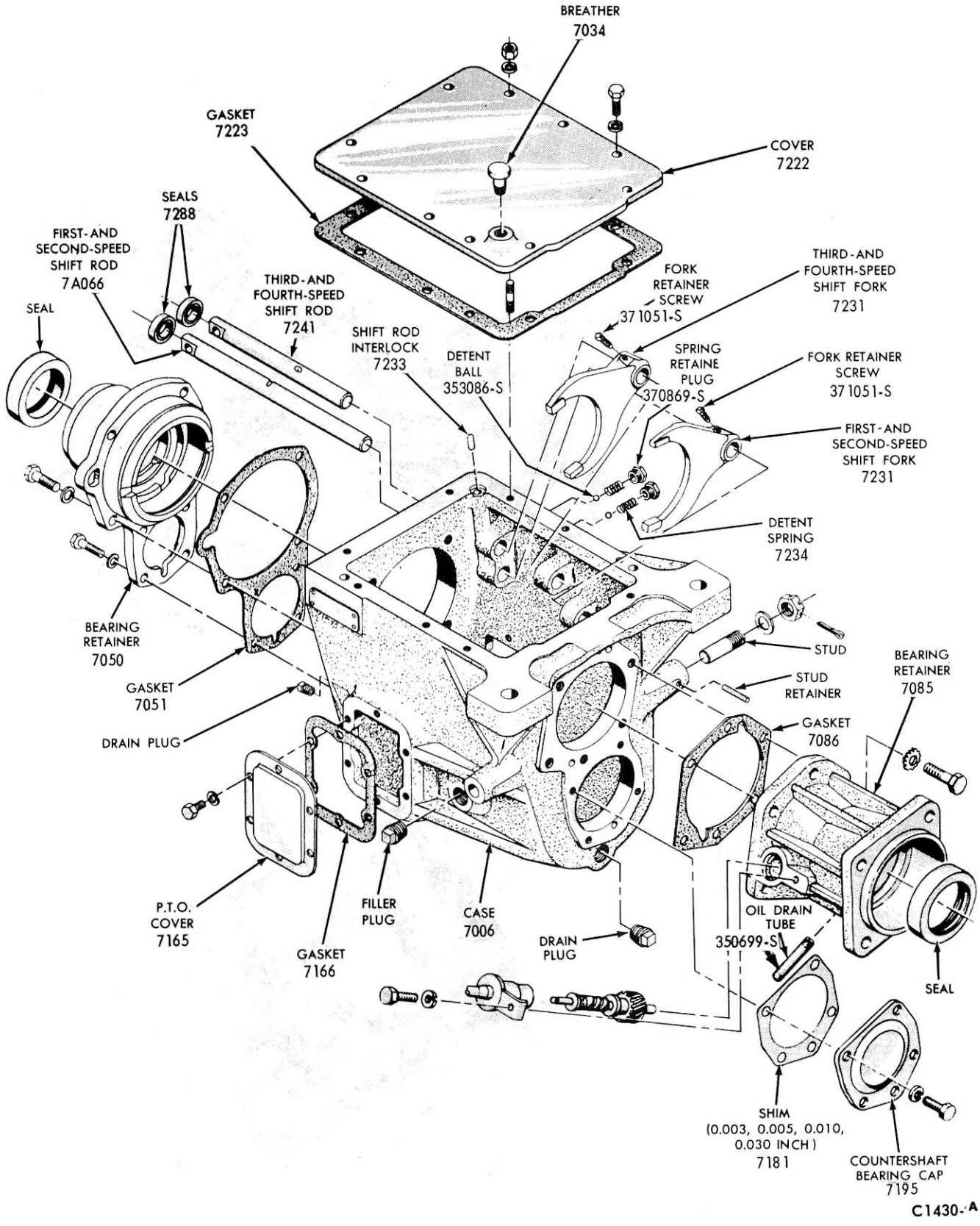

FIG. 28 Transmission Case Disassembled—Model 7041

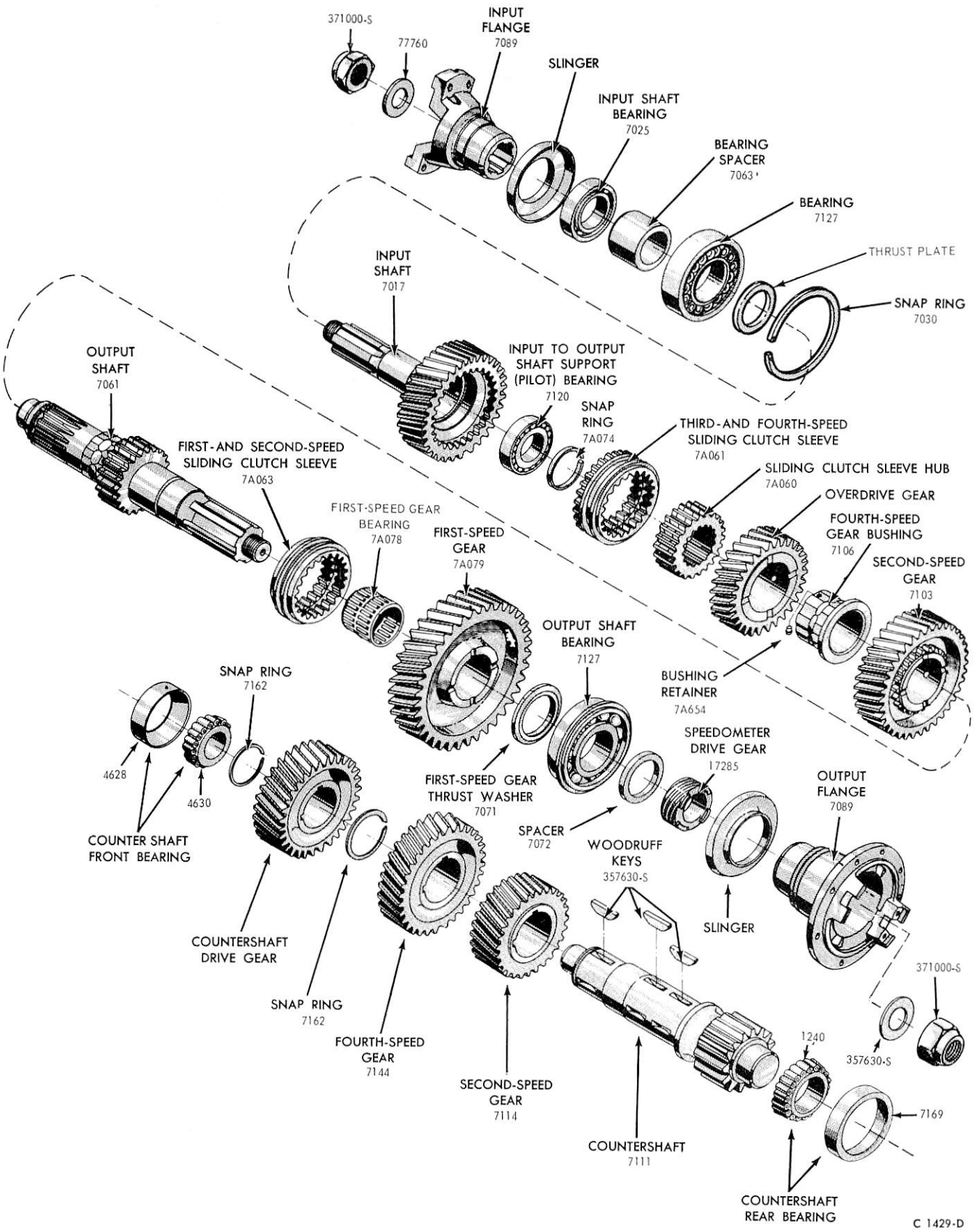

FIG. 29 Transmission Gear Train Disassembled—Model 7041

8. Install the speedometer gear spacer with the flat side to the rear and install the speedometer gear.
9. Install the output shaft bearing retainer and gasket.
10. Install the third and fourth-speed sliding clutch sleeve.
11. Install the pilot (pocket) bearing on the front of the output shaft.
12. Install the input shaft in the case and onto the pilot bearing.
13. Install the input shaft bearing retainer and gasket.
14. Install the input shaft bearing spacer, front bearing and seal in the bearing retainer.
15. Press the input shaft flange on the input shaft T. Torque the retainer nut to specifications. Install the cotter pin.
16. Press output shaft flange into position and install flat washer and retainer nut. Torque the nut to specifications. Install the cotter pin.
17. Start the first and second-speed shift rod into the case. Place the first and second-speed fork in position and push the rod through it.
18. Insert the interlock in the case. Move the first and second rod to its neutral position.
19. Place the third and fourth-speed fork into position and slide the shift rod through the fork. Move the rod to its neutral position.
20. Install the fork lock screws and the lock wire.
21. Install the detent balls, springs and spring retainers.
22. Install the top cover.

SUB-ASSEMBLIES

OUTPUT SHAFT

Disassembly

1. Slide the first-speed gear and bushing off the rear of the output shaft (Fig. 29).
2. Slide the first and second-speed sliding clutch sleeve off its hub and off the rear of the output shaft.
3. Remove the third and fourth-speed (or third and overdrive) sliding clutch sleeve hub snap ring from the front of the output shaft.
4. Remove the sleeve hub from the front of the output shaft.
5. Slide the third-speed (or overdrive) gear off the front of the output shaft.
6. Place the output shaft assembly in a press. Support the assembly on the outer rear face of the second-speed gear and press the output shaft through the third-speed (or overdrive) gear bushing and the second-speed gear. The bushing retainer will come off with the third-speed (or overdrive) gear bushing.

Assembly

1. Place the second-speed gear on the front of the output shaft with the clutch teeth toward the rear of the shaft (Fig. 29).
2. Install the retainer (Fig. 29) in the fourth-speed or (overdrive) gear bushing and press the bushing onto the output shaft. The flanged end of the bushing goes toward the rear of the output shaft.
3. Slide the fourth gear (or overdrive) gear on its bushing.
4. Install the third and fourth-speed (or overdrive) sliding clutch sleeve hub on the output shaft. Install the snap ring.
5. Install the first and second-speed sliding clutch sleeve over the rear of the output shaft and onto its hub which is integral with the shaft. The longer part of the hub (from the shift fork groove) goes toward the front of the input shaft.
6. Slide the first-speed gear onto the rear of the output shaft.

INPUT SHAFT

Disassembly

1. Press the input shaft through the input shaft front and rear bearings and out of the rear of the input shaft bearing housing.
2. The input shaft rear bearing and input shaft front-to-rear bearing spacer can be removed from the housing after the snap ring between the rear bearing outer race and housing has been removed.
3. Remove the input shaft front bearing and input shaft flange seal arm out through the front of the housing.
4. Remove the input-to-output shaft (pocket) bearing.

Assembly

1. Install the two-piece input shaft rear bearing into the input shaft bearing retainer housing with the thrust plate (Fig. 30) facing the rear. Assemble the flanged spacer with flanged end down toward the new bearing. (See stamped word 'FRONT' on sleeve.) Assemble small (front end) bearing into the bearing cap bore. Seat the bearing to cap shoulder firmly.

With tubing, or sleeve supporting the small bearing in the cap, place tubing and cap on the Arbor Press (with large rear bearing face up). Check the large bearing to be sure the thrust plate of bearing is still in proper place. Position the drive gear in the bearing cap sub-assembly and press the gear slowly into both bearings. Be sure proper seating between the thrust plate and drive gear shoulder is achieved as shown in Figure 30. (Fig. 30)

2. Install the snap ring in the housing rear of the bearing outer race.

COUNTERSHAFT

Disassembly

1. Remove the front and rear countershaft bearing cones with a suitable puller.
2. Remove the countershaft drive gear snap ring.
3. Place the countershaft assembly in a press. Support the drive gear at its hub or as near to the hub as possible. Press the countershaft out of the drive gear.
4. Remove the two exposed Woodruff keys from the countershaft and remove the fourth-speed (or overdrive) gear snap ring.
5. Place the countershaft assembly in a press. Support the assembly on the rear face of the fourth-speed (or overdrive) gear, and press the output shaft out of it.
6. Remove the exposed Woodruff keys.
7. Return the assembly to the press. Support the second-speed gear and press the countershaft out of it.
8. Remove the exposed Woodruff keys.

Assembly

1. **To assemble the countershaft, reverse the procedure given under Disassembly. Observe the following cautions:**
   a. Coat the bores of all gears with white lead before they are pressed on the countershaft.
   b. If the Woodruff keys are mutilated or burred after they are installed in the shaft, file the keys to the correct dimension and remove the burrs. This will prevent chips and slivers from peeling off during gear installation. These chips and slivers may prevent the next gear from seating properly.
   c. Most gear bores are chamfered only on the shaft-entering side. Press the shaft into the chamfered end of the gear bore.

MODEL 5831

Disassembly

1. Remove the gear shift housing and install the transmission assembly in an overhaul stand.
2. Lock the transmission in two gears, remove the input yoke nut, and remove the input shaft yoke and slinger.
3. Remove the transmission support

from the input shaft bearing retainer.
4. Remove the nut and flange (and drum) from the output shaft. Remove the brake shoe assembly.
5. Remove the attaching bolts from the transmission rear mounting bracket and remove the bracket.
6. Remove the output shaft rear bearing retainer bolts and lock washers. Remove the retainer and gasket, and remove the speedometer drive gear from the output shaft.
7. Remove the input shaft bearing retainer bolts and lock washers. Remove the retainer, the gasket, and the bearing spacer from the input shaft.
8. Remove the countershaft rear bearing cap and shims, and tie the shim pack together for use at assembly.
9. With a soft hammer, tap the underdrive gear toward the rear of the transmission until the bearing clears the case bearing bore.
10. Install a suitable two-jawed puller, and remove the bearing from the output shaft. Remove the underdrive sleeve and hub from the output shaft through the rear bearing bore (Fig. 31).
11. Tilt the front of the output shaft upward until it clears the input shaft, and slide the output shaft out of the case.
12. Remove the 13 pilot bearing rollers from the recess in the input shaft.
13. Remove the input shaft bearing snap ring from the bearing.
14. Tap the bearing and gear into the case with a brass hammer.
15. With a brass drift and hammer, drive the countershaft toward the rear of the case until the countershaft rear bearing cup is out of the case.
16. Slide the countershaft toward the rear of the case until it clears the bore in the case, and remove the shaft from the case. **Remove any output shaft pilot bearing rollers which may have dropped into the case.**
17. With a brass drift, remove the countershaft front bearing cup from the case.
18. If the input shaft bearing is to be removed, install Tool T53T-7065-A on the input shaft bearing, and remove the bearing from the input shaft. Remove the tool from the bearing.

Assembly

Coat all parts with transmission lubricant to prevent scoring when the transmission is first operated.

1. Position the transmission support, making certain the support does not bind and is free on the bearing retainer. **Install the support so that the face marked FRONT is forward.**
2. Make certain the U-joint flange and yoke hubs, which contact the lips of the oil seals, are clean, smooth, and free of corrosion. If there is corrosion or roughness and it cannot be removed with fine emery cloth, install a new U-joint flange and yoke. Coat the hub of the front flange with new transmission lubricant.
3. Lock the transmission in two gears. Install the slinger, the input shaft yoke, the input yoke nut, and torque the nut to specification. Lock the nut in place with a new cotter pin.
4. Press the input shaft bearing onto the input shaft with the snap ring groove toward the splined end of the shaft.
5. Insert the splined end of the input shaft into the input shaft bearing bore from inside the case. After the bearing is positioned in the bore, install the snap ring on the bearing making certain that the snap ring seats solidly in its groove.
6. Coat the input shaft pilot bearing recess with enough petrolatum to hold the pilot bearing rollers in place and position the 13 rollers in the recess.
7. Install a new input shaft bearing spacer over the outer end of the input shaft and against the inner bearing. Apply B5A-19554-A sealing compound to a new input shaft bearing retainer gasket and install the gasket on the front of the case. The gasket oil passage hole must be properly aligned.
8. Carefully position the bearing retainer over the end of the input shaft, and carefully tap the retainer into place. Install the retainer attaching bolts, using new lock washers, and torque the bolts to specifications. Install the transmission vent in the top of the bearing retainer.
9. Install the transmission mounting bracket and torque the mounting bracket bolts to specification.
10. Install the brake shoe assembly. Install the rear U-joint flange (and drum), and torque the nut to specification. Secure the nut with a new cotter pin.
11. Make sure the transmission gears are in neutral. Apply B5A-19554-A sealing compound to a new shift housing gasket and place the shift housing gasket on the transmission case.

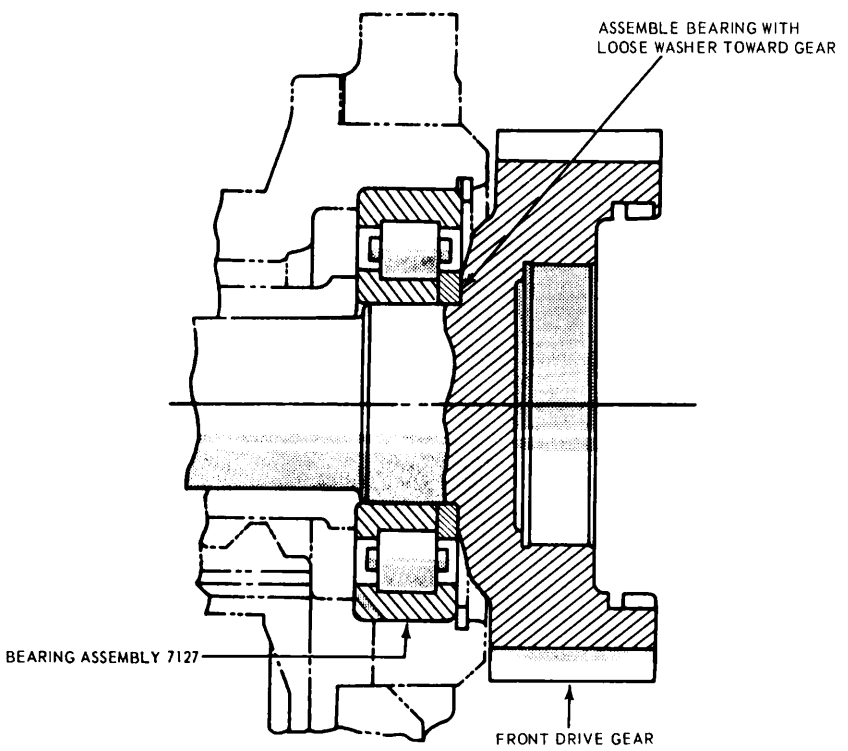

FIG. 30 Installing Input Shaft Rear Bearing—Model 7041

12. Position the housing on the gasket with the outer ends of the shift rods toward the front of the transmission and each shifter fork engaged in its respective sleeve groove. Install the housing on the case, and torque the bolts to specification.

SUB-ASSEMBLIES

OUTPUT SHAFT

Disassembly

1. Remove the underdrive gear from the output shaft.
2. Remove the direct and overdrive sleeve from the front end of the shaft.
3. From the front end of the output shaft, remove the snap ring that holds the hub in place. Remove the hub and the overdrive gear.

Assembly

1. Apply transmission lubricant to the shaft and gear splines. Position the output shaft overdrive gear on the front end of the shaft with the sleeve teeth toward the front (Fig. 30).
2. Position the output shaft direct and overdrive hub, with the face of the hub stamped X toward the front end of the shaft. Install the hub snap ring in its groove. **The snap ring must seat solidly in the groove.**
3. Coat the exterior teeth of the hub with new transmission lubricant and install the direct and overdrive sleeve on the hub with the external teeth on the hub of the sleeve toward the front end of the output shaft. Install the underdrive gear, with the sleeve teeth toward the rear.
4. Position the rear end of the output shaft and gear assembly in the rear bearing bore, and lower the output shaft into place. The output shaft overdrive and underdrive gear teeth must mesh with the respective countershaft gears.
5. Position the underdrive hub with the face stamped X toward the rear of the output shaft. Insert the hub through the output shaft bearing bore and against the face of the underdrive gear. Install the sleeve through the rear bearing bore with the long hub of the sleeve facing the underdrive gear (Fig. 31).
6. Position the output shaft rear bearing on the shaft, with the snap ring groove toward the rear of the transmission. Drive the bearing into place with a brass drift or with a steel tube which will bear on the

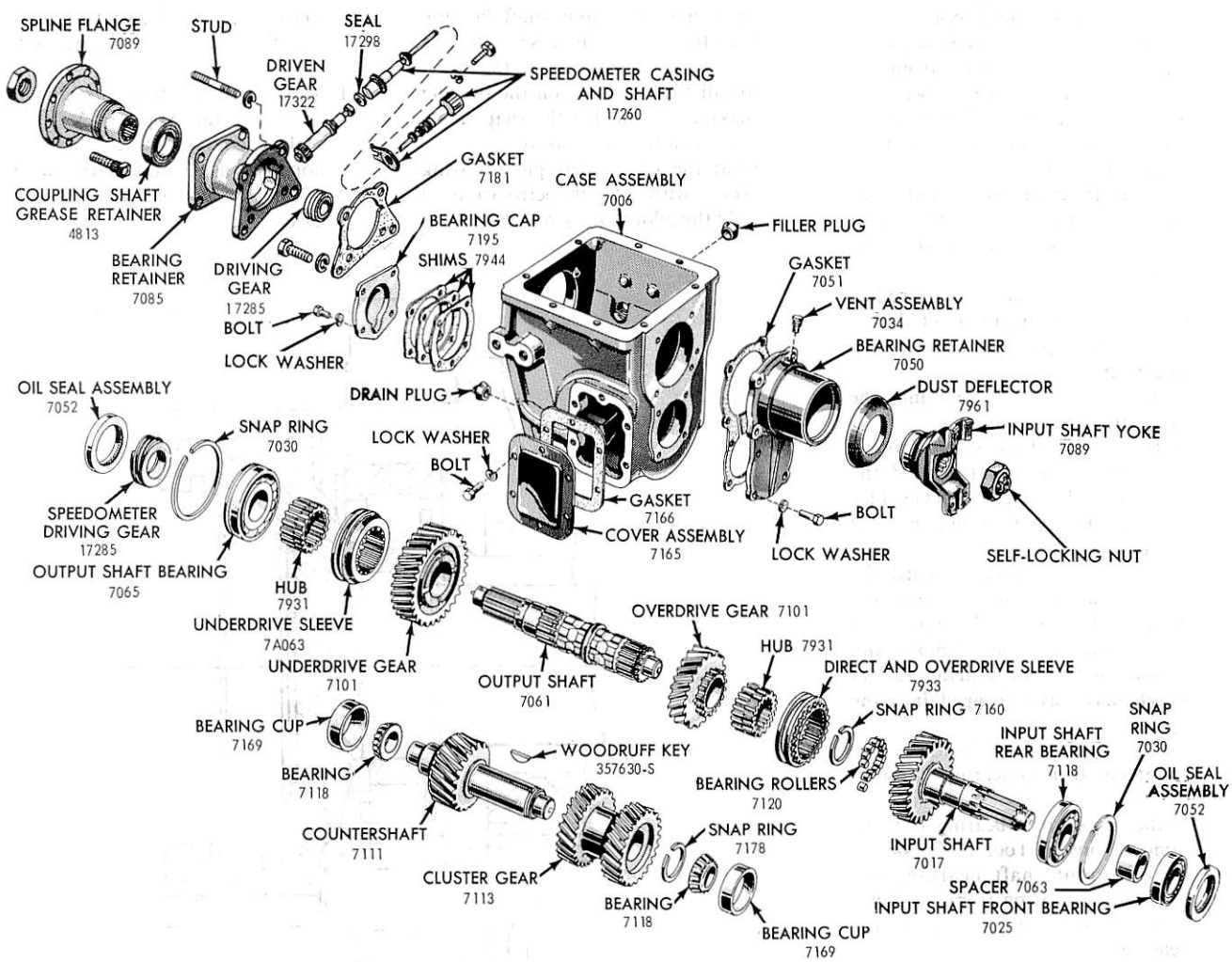

FIG. 31 Model 5831—Disassembled

bearing inner race. Install the snap ring in the bearing groove, seating the ring solidly.
7. Install the speedometer drive gear.
8. Apply B5A-19554-A sealing compound to the new output shaft rear bearing retainer gasket and position the output shaft rear bearing retainer gasket on the rear of the transmission.
9. Position the bearing retainer, and install the bolts and new lock washers. Torque the bolts to specification.
10. Install the power take-off covers on the transmission case, using new gaskets.

COUNTERSHAFT

Disassembly

1. Remove the countershaft drive gear snap ring from the groove in the shaft, leaving the ring on the shaft behind the bearing.
2. Position the countershaft in a press, and press the countershaft out of the front bearing, the snap ring, and the cluster gear.
3. Remove the countershaft rear bearing and remove the Woodruff key from the countershaft.

Assembly

1. Press the countershaft rear roller bearing onto the countershaft. Install the Woodruff key in the countershaft keyway.
2. Position the rear end of the countershaft in a press plate. Position the cluster gear on the countershaft aligning the gear keyway with the Woodruff key in the countershaft. The countershaft drive gear (the smaller cluster gear) must be toward the front.
3. Press the cluster gear onto the countershaft. Install the cluster gear snap ring.
4. Press the countershaft front roller bearing onto the countershaft. Lower the rear end of the countershaft, and slide the assembly forward into position.
5. Brush a thin coating of transmission lubricant onto the inner faces of the countershaft bearing cups. Position a cup in the countershaft bearing retainer, with a new retainer gasket to properly locate the countershaft front roller bearing cup.
6. Position the countershaft rear bearing cap without shims, and install the bolts.

Measure the clearance between the cap and case. Select a shim or shims which will permit the countershaft to have a 0.001 to 0.003 inch end play. Shims are available in the following sizes: 0.003, 0.010, and 0.030 inch.

After the countershaft bearing adjustment is completed, torque the bolts to specification.

BEARING RETAINERS

Disassembly

Press the oil seal and bearing out of the input shaft bearing retainer, and remove the vent. Press the seal out of the output shaft rear bearing retainer.

1. Press the input shaft outer bearing squarely into the input shaft bearing retainer. Apply B5A-19554-A sealing compound to the OD of a new input shaft oil seal and install the oil seal. The wiping lip of the seal must be positioned toward the rear of the retainer.
2. Apply B5A-19554-A sealing compound to the OD of a new output shaft oil seal and install the oil seal in the output shaft rear bearing retainer, with the wiping lip of the oil seal toward the front of the transmission.

GEAR SHIFT HOUSING

Disassembly

1. Remove the shift rod spring and ball plug from the side of the housing, and remove the spring and ball (Fig. 32).
2. Remove the lock wire and set screw from the direct and overdrive shifter fork. Slide the direct and overdrive shift rod out of the front of the housing, and remove the shifter fork. Remove the plunger from the housing.
3. Remove the lock wire and set screw from the underdrive shifter fork. Pull the underdrive shift rod out of the shifter fork. Remove the ball and spring from the housing.
4. If the oil seals in the front of the housing are damaged, or cause oil leaks, remove the seals from the cover.

Assembly

1. Place the housing in a vise, with the plunger spring and ball opening in the housing at the top. Dip the spring in transmission lubricant, and position it in the housing (Fig. 32).
2. Place one of the shift rod balls on top of the spring. Insert the underdrive shift rod (longer shaft) through the front of the housing. Hold the ball down, and push the shift rod through the center support. The notches in the rod must be indexed with the ball.
3. Pull the shift rod back far enough to permit installation of the underdrive shifter fork. Install the fork on the shaft **with the longer hub of the fork toward the front of the housing.** Align the lock screw hole in the fork with the lock screw recess in the shift rod.

Install the lock screw, tighten it solidly, and install a new lock wire. Shift the rod and fork assembly to neutral position.

4. Insert the plunger in the cross hole in the cover. Insert the direct and overdrive shift rod into the housing. Position the direct and overdrive shifter fork on the rod, and slide the rod through the center support. Align the lock screw hole in the rod, install the lock screw, and tighten it firmly. Secure the lock screw with a new lock wire.
5. Install the shift rod ball, dip the spring in new transmission lubricant, and position the spring on top of the ball. Secure the spring with the retaining plug. Tighten the plug solidly.
6. If the housing shifter shaft oil seals were removed, place the new oil seals (dipped in transmission lubricant), over the front ends of the two shifter shafts with the lips of the seals toward the rear of the cover. Press them carefully into place. The lips of the seals must not be damaged during installation. Shift the direct and overdrive shifter shaft and fork assembly to the neutral position.

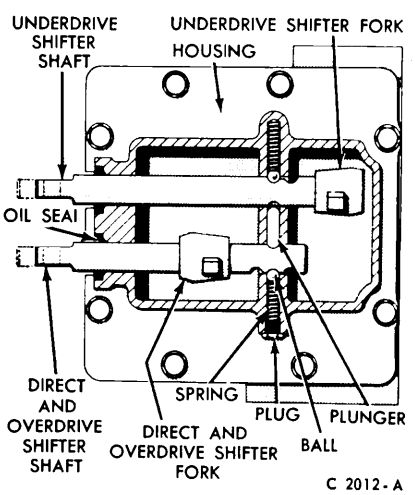

FIG. 32 Gear Shift Housing—Model 5831

SPECIFICATIONS

APPROXIMATE LUBRICANT REFILL CAPACITY (PTS) (USE SAE 50 ENGINE OIL–ESE-M2C39-A)

Model	US	IMP		Model	US	IMP
5831	4	3.4		7231	8	6.8
7041	11	6.6		8031	12	10
8341	12	10				

CC1162-A

TORQUE LIMITS (FT-LBS)

Spicer Auxiliary Transmissions	5831 ③	7041	7231	8031	8341
Companion Flange Nuts		500-550	400-450	400-450	500-550
Countershaft Bearing Cap					25-32
Countershaft Front Bearing Retainer				40-50	60-80
Countershaft Locknut					550-600
Direct and Overdrive Clutch Gear Locknut				550-600	
Input Shaft Bearing Cap				25-32 ① 60-80 ②	25-32 ① 60-80 ②
Input Shaft Bearing Retainer		35-40	35-40	40-50	40-50
Input Shaft Locknut				400-450	
Output Shaft Bearing Retainer		35-40	35-40	40-50	60-80
Shift Fork Lock Screw		45-50	45-50	45-50	40-50

① 3/8-16 Cap Screws
② 1/2-13 Cap Screws
③ Torques not available at time of printing

CC1163-A

PART 16-80 Dana 20 Four Wheel Drive Transfer Case

Applies To Bronco Only

COMPONENT INDEX	Page	COMPONENT INDEX	Page
FRONT DRIVE OUTPUT SHAFT		SHIFT RAIL OIL SEALS	
Disassembly and Assembly	80-06	Disassembly and Assembly	80-06
INPUT SHAFT		SPECIFICATIONS	80-09
Disassembly and Assembly	80-05	TRANSFER CASE	
REAR DRIVE OUTPUT SHAFT		Assembly	80-04
Disassembly and Assembly	80-05	Description	80-01
		Disassembly	80-03
		Removal and Installation	80-01

DESCRIPTION

TRANSFER CASE

A manually-shifted 2-speed transfer case in the 4-wheel drive Bronco transfers the power from the engine and transmission to the front and rear driving axles. The transfer case shift lever positions, from front to rear, are 4L (low gear, all wheels), N (Neutral), 2H (high gear, rear wheels), and 4H (high gear, all wheels).

REMOVAL AND INSTALLATION

TRANSFER CASE

Removal

1. Shift the transfer case into neutral.
2. Remove the bolts attaching the fan shroud to the radiator support.
3. Raise the vehicle on a hoist.
4. Support the transfer case shield with a jack and remove the bolts that attach the shield to the frame side rails. Remove the shield.
5. Drain the transmission and transfer case lubricant.
6. Disconnect the front and rear drive shafts at the transfer case (Fig. 1).
7. Disconnect the speedometer cable at the transfer case.
8. If equipped with a manual transmission, disconnect the shift rods from the transmission shift levers. Then, place the first-reverse gear shift lever into the first gear position, and insert the fabricated tool (Fig. 2). This tool will prevent the input shaft roller bearings from dropping into the transmission case when separating the transfer case from the transmission and output shaft.
9. Support the engine with a jack.
10. Remove the two cotter pins, bolts, washers, plates, and insulators that secure the crossmember to the transfer case adapter.
11. Remove the crossmember to frame side support attaching bolts.
12. Raise the transmission and remove the upper insulators from the crossmember, remove the crossmember.
13. Roll back the boot enclosing the transfer case shift linkage. Remove the threaded cap holding the shift lever assembly to the shift bracket. **Remove the shift lever assembly.**
14. Secure the transfer case to a transmission jack, and remove the transfer case adapter-to-transmission attaching bolts.
15. Move the transfer case and jack rearward until it clears the transmission output shaft. Lower the transfer case.

Installation

1. Position the transfer case to the transmission and install the attaching bolts. Torque the bolts to specifications (Fig. 1).
2. Position the transfer case shift lever and install the threaded cap to the shift bracket. Reposition the rubber boot.
3. Raise the transmission and transfer case high enough to provide

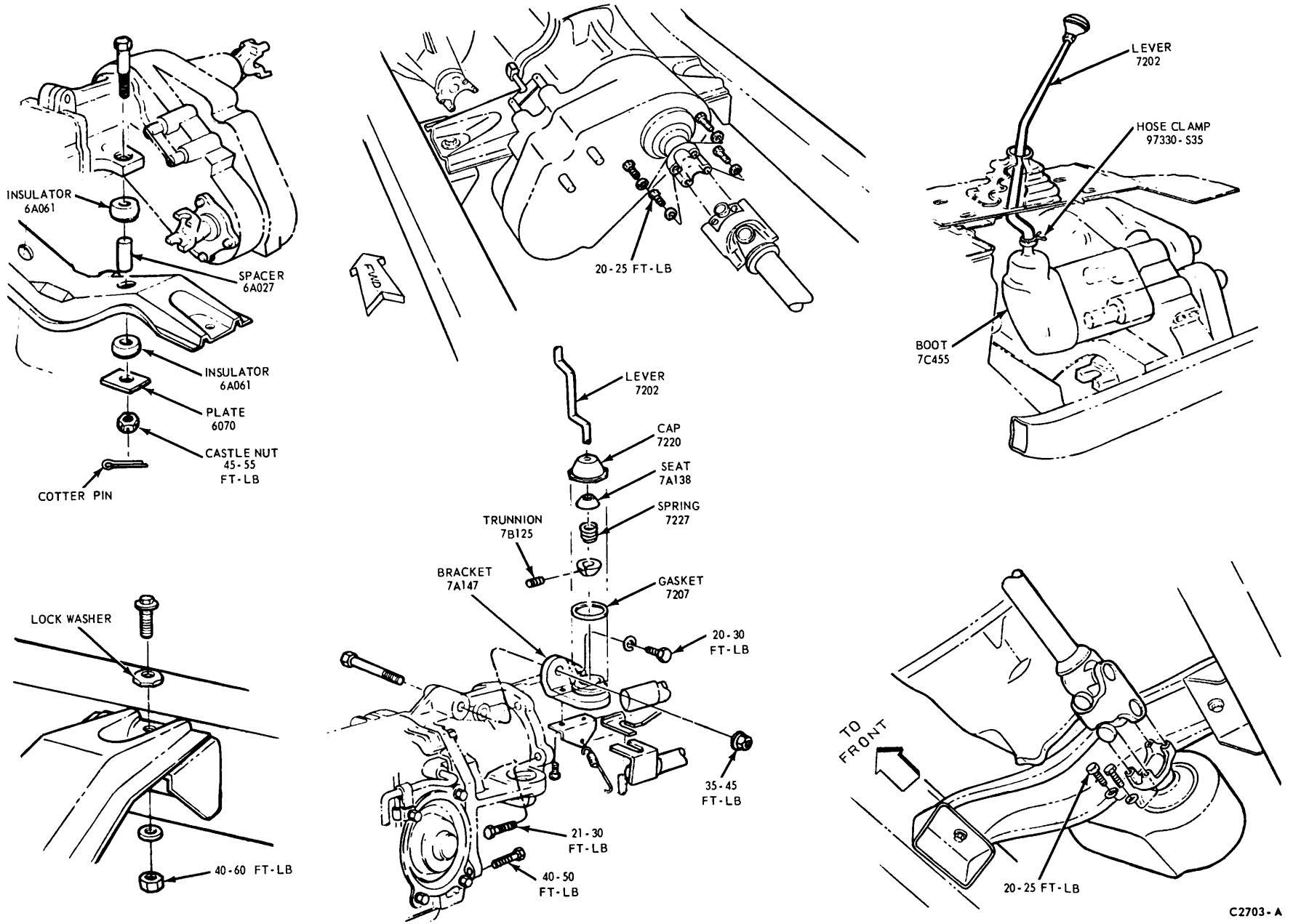

FIG. 1 Transfer Case Installation

clearance for installing the crossmember. Position the upper insulators to the crossmember and install the crossmember-to-frame side support attaching bolts. (Torque to specifications Fig. 1).

4. Align the bolt holes in the transfer case adapter with those in the crossmember, then lower the transmission and remove the jack.
5. Install the crossmember-to-transfer case adapter bolts, insulators, plates, and washers. Torque the bolts to specifications (Fig. 1). Secure the bolts with cotter pins.
6. Remove the engine jack.
7. If equipped with a manual transmission, remove the fabricated tool (Fig. 2), and connect each shift rod to its respective lever on the transmission. Refer to Part 16-11 for rod adjustment instructions.
8. Connect the speedometer cable.
9. Install the rear axle driveshaft to the transfer case, and torque the attaching bolts to specifications.
10. Install the front wheel driveshaft to the transfer case, and torque the attaching bolts to specifications.
11. Fill the transmission and transfer case to the proper levels with the recommended lubricant.
12. Position the transfer case shield to the frame side rails, and install the attaching bolts.
13. Lower the vehicle.
14. Install the fan shroud.
15. Check transfer case operation.

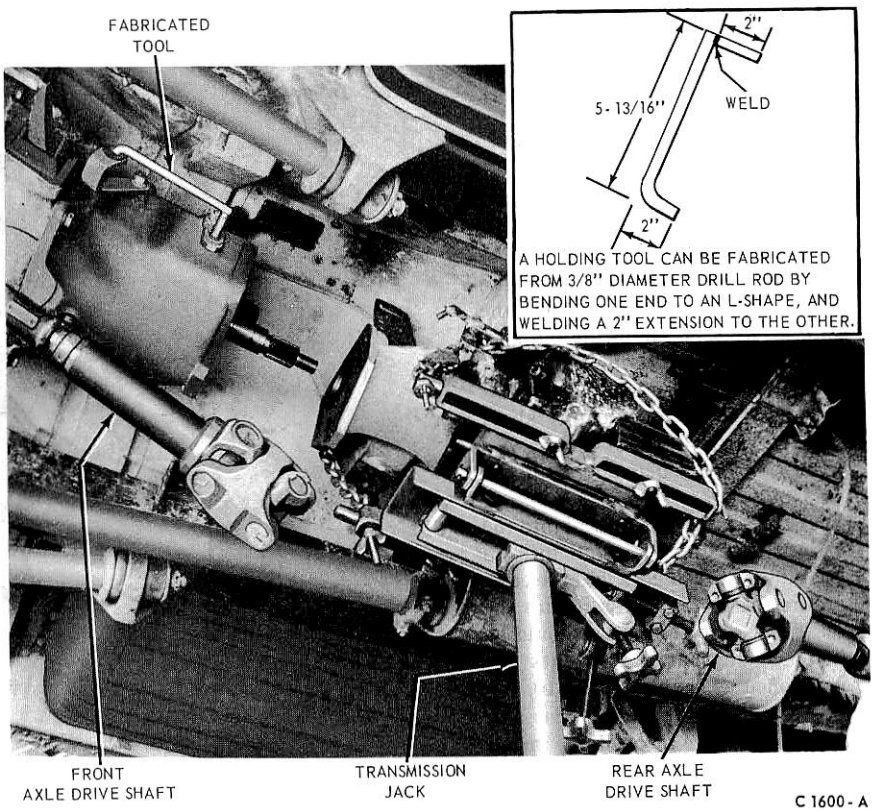

FIG. 2 Removing or Installing Transfer Case—Bronco-Manual Transmission

DISASSEMBLY AND ASSEMBLY

TRANSFER CASE

Disassembly

1. Clean the dirt from the transfer case, and remove the bottom cover plate.
2. Remove the retaining plug, flat washer, detent spring, and ball that engages the front drive shaft rail detent rod. Then, remove the plug from the front drive detent rod access hole (Fig. 3).
3. Remove the retaining plug, detent spring, and ball that engages the rear drive shift rail detent rod (Fig. 3).
4. Remove the idler shaft lock plate from the rear of the case.
5. **Using a hammer and soft drift, drive the idler shaft rearward and out of the case. Then, lift the thrust washers and idler gear from the case (Fig. 3). When removing the idler gear, do not lose any of the rollers.**
6. Remove the flange retaining nuts from the front and rear output shafts (Fig. 5).
7. Remove the flange from the front and rear output shafts (Fig. 6). Discard the front flange O-ring.
8. Remove the bolts securing the adapter housing to the case and remove the adapter as an assembly (Fig. 7).
9. Remove the bolts that attach the rear output shaft bearing retainer to the case, and remove the retainer and output shaft as an assembly. **Be careful not to lose any of the rollers.**
10. Disconnect the shift rail link from the two shift rails.
11. Lift the rear output shaft sliding gear from the case (Fig. 7).
12. Remove the set screw securing the rear shift fork to the shift fork to the shift rail. Then, remove the rear drive shift rail and fork from the case (Fig. 7).
13. Remove the front output shaft rear cover and shims. Tie the shims together.
14. Remove the front output shaft bearing retainer and gasket. Remove the retainer seal if it is worn or damaged.
15. Tap the threaded end of the front output shaft to remove the rear cup from the case bore.
16. Wedge the front output shaft front bearing away from the main drive gear to allow removal of the snap ring from its groove in the shaft. Then, tap the shaft and rear bearing out of the case (Fig. 8).
17. Lift the sliding gear, main drive gear, front bearing, spacer, and snap ring from the case.
18. Remove the front cup from the case

bore.

19. Remove the set screw securing the front shift fork to the shift rail. Then, remove the shift rail and fork from the case.
20. Remove the detent rods (Fig. 9).

Assembly

1. Install the front detent rod in the case.
2. Slide the front drive shift rail all the way into the case, and position the shift fork on the rail as the rail goes into the case. Secure the fork to the rail with the set screw.
3. Position the front output shaft sliding gear in the shift fork.
4. Install the rear detent rod in the case.
5. Slide the rear drive shift rail into the case, and position the shift fork on the rail as the rail goes into the case. Secure the fork to the rail with the set screw. **The shift rails should be inserted so that the detents are positioned as shown in Fig. 10.**
6. **While holding the sliding gear and main drive gear in position, install the front output shaft and rear bearing assembly through the two gears from the rear of the case.**
7. Install the main drive gear spacer and secure with the snap ring (Fig. 11).
8. Install the front output shaft rear bearing cup.
9. Position the front output shaft rear cover and shims to the case, and install the attaching bolts.
10. Using front flange and the tool shown in Fig. 4, install the front output shaft front bearing on the shaft. Install the front bearing cup (Fig. 11).
11. **If the front bearing retainer oil seal was removed, install a new seal using Tool T57-L7657. Position the bearing retainer and gasket to the case, and install the attaching bolts.**
12. Place the rear output shaft rear bearing retainer on a work bench, and install 13 needle bearings in the splined hub of the output shaft with vaseline or grease.
13. Position the rear output shaft rear bearing retainer assembly to the case and install the attaching bolts.
14. Install the rear output shaft sliding gear in the shifting fork and on the splines of the output shaft.
15. Position the adapter housing assembly to the rear output shaft and case. Install the attaching bolts (Fig. 7).
16. Install the roller bearings in the bore of the idler shaft gear with vaseline or grease.

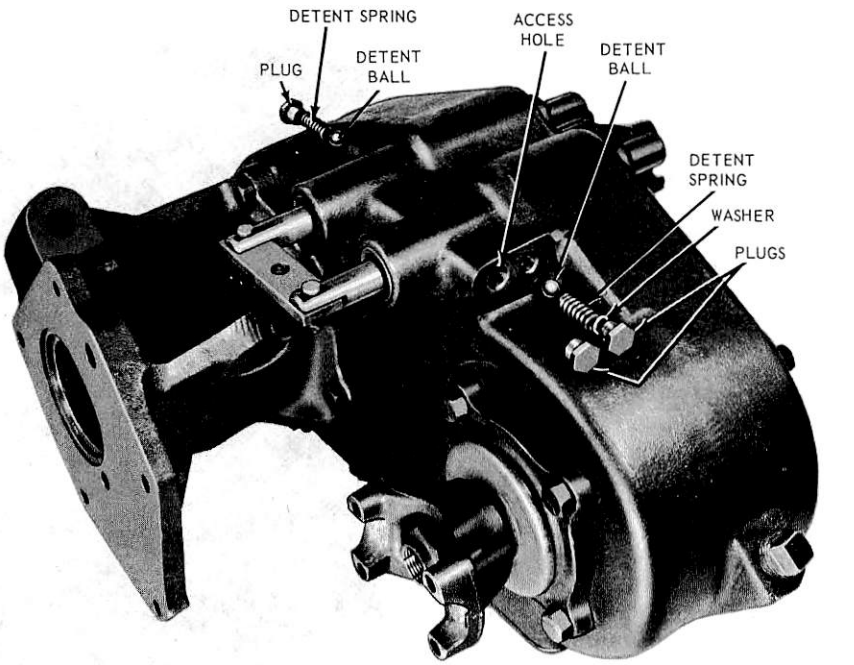

FIG. 3 Shift Rail Detent Bolts, Springs and Plugs

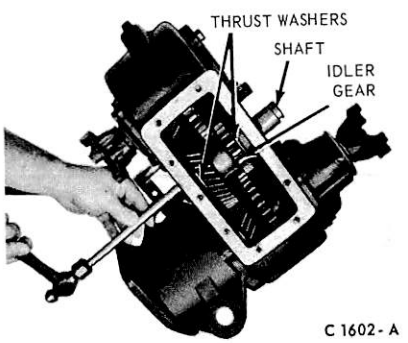

FIG. 4 Removing Idler Shaft

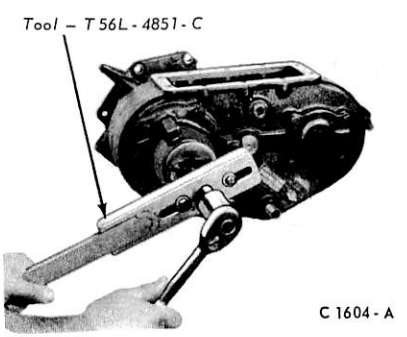

FIG. 6 Removing Flange

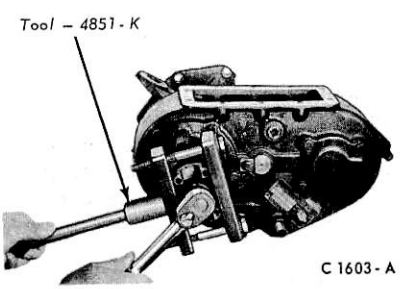

FIG. 5 Removing or Installing Flange Retaining Nut

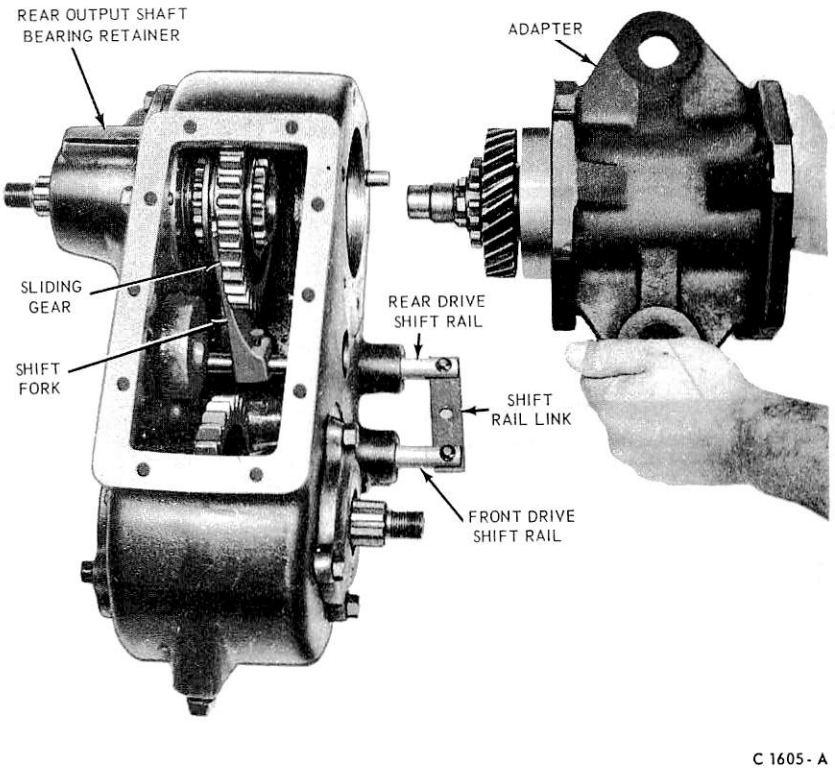

FIG. 7 Removing or Installing Adapter Housing

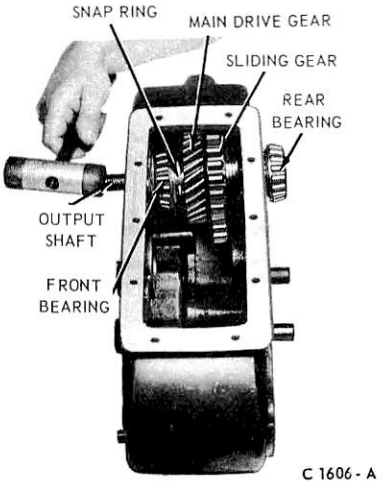

FIG. 8 Removing Front Output Shaft

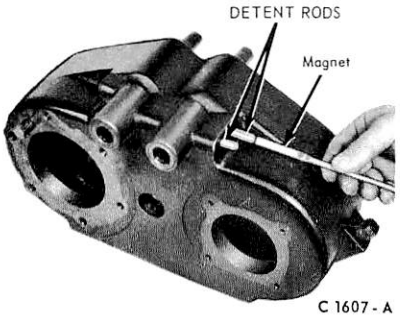

FIG. 9 Removing Detent Rods

17. Position the idler gear and thrust washers in the case, and drive the idler shaft into the rear of the case through the idler gear and thrust washers. **After installing the idler shaft, tap the sides of the case to relieve tension from the case.** Install the idler shaft lock plate.
18. Secure the shift rail link to the two shift rails.
19. Install the front and rear drive shift rail detent balls, springs, and retaining plugs. **Be sure that the heavier loaded spring and flat washer are installed in the front drive shift rail. Install the rod access hole plug.**
20. Install the flange, washer, and retaining nut on each of the output shafts, using the tool shown in Fig. 4. **Be sure to install a new O-ring in the front output shaft flange.** Torque the attaching nuts to specifications.
21. Install a dial indicator on the front drive output shaft and check the end play as shown in Fig. 11. The end play should be 0.001-0.005 inch. If not within these limits, adjust the shim pack at the front output shaft rear cover.
22. Position the cover plate to the case and install the attaching bolts.

SUB-ASSEMBLIES

INPUT SHAFT

Disassembly

1. Remove the snap ring from the front of the shaft (Fig. 13).
2. Place the adpater housing and input shaft on a press, and press the shaft out of the main drive gear and housing.
3. Remove the bearing retaining snap ring from the housing bore, and remove the bearing.
4. Remove the seal in the adapter housing if it is worn or damaged.

Assembly

1. If the adapter housing seal was removed, install a new seal with the tool shown in Fig. 14.
2. Place the bearing in the housing and secure with the snap ring.
3. Using the main drive gear as a base, press the input shaft through the housing seal, bearings, and main drive gear. Install the snap ring on the front of the shaft.

REAR DRIVE OUTPUT SHAFT

Disassembly

1. Remove the needle bearings from the bore of the shaft (Fig. 15).
2. Remove the speedometer driven gear from the bearing retainer housing.
3. Place the bearing retainer and rear output shaft assembly in a press, and press the shaft out of the retainer.
4. Lift the speedometer drive gear and shims from the shaft (Fig. 15). Tie the shims together.
5. Press the outer cup, bearing and seal from the bearing retainer as shown in Fig. 16.
6. Remove the inner cup with the tool shown in Fig. 16.
7. Remove the inner bearing from the output shaft with the tool shown in Fig. 17.

Assembly

1. Press the shaft onto the inner bearing with the tool shown in Fig. 17.
2. Install the outer cup in the bearing retainer with tool T55P-4616A1.
3. Install the inner cup with tool T56T-4616-A2.
4. Position the outer bearing into the bearing retainer. Then, place the

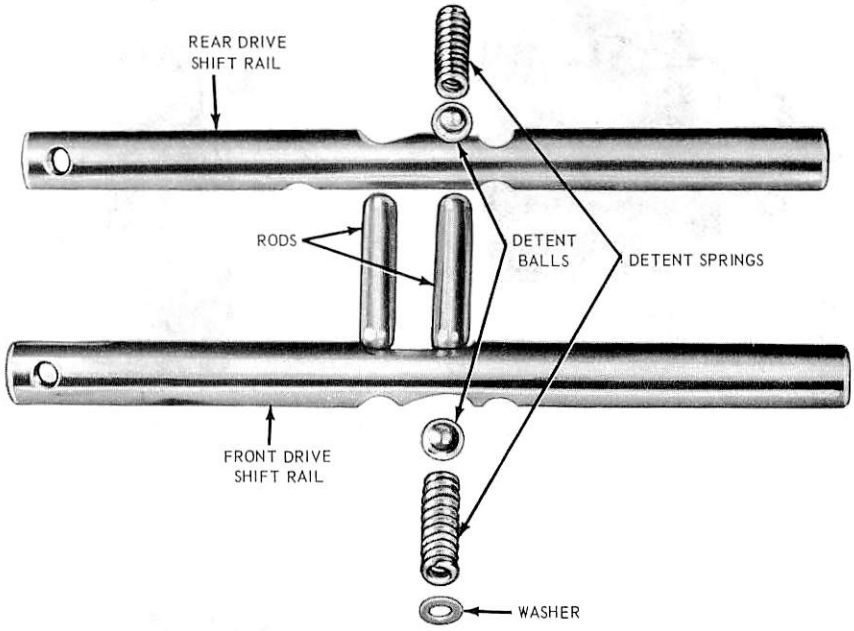

FIG. 10 Shift Mechanism

shims and speedometer drive gear on the output shaft, and install the shaft in the bearing retainer housing.

5. Place the bearing retainer and shaft in a vise. Install the output shaft flange and torque the attaching nut to specifications. Install a dial indicator on the flange end of the output shaft, and check the end play. The end play should be 0.003-0.005 inch. If not within these limits, adjust the shim pack (Fig. 15) between the speedometer drive gear and rear output shaft outer bearing.
6. After establishing the correct end play, remove the output shaft flange and press the bearing retainer seal in the housing with tool T56T-4616-A. Install the speedometer driven gear.

FRONT DRIVE OUTPUT SHAFT

Disassembly

1. To remove the front output shaft rear bearing, use the sliding gear as a base and press the bearing from the shaft.

Assembly

1. Install the bearing as shown in Fig. 18.

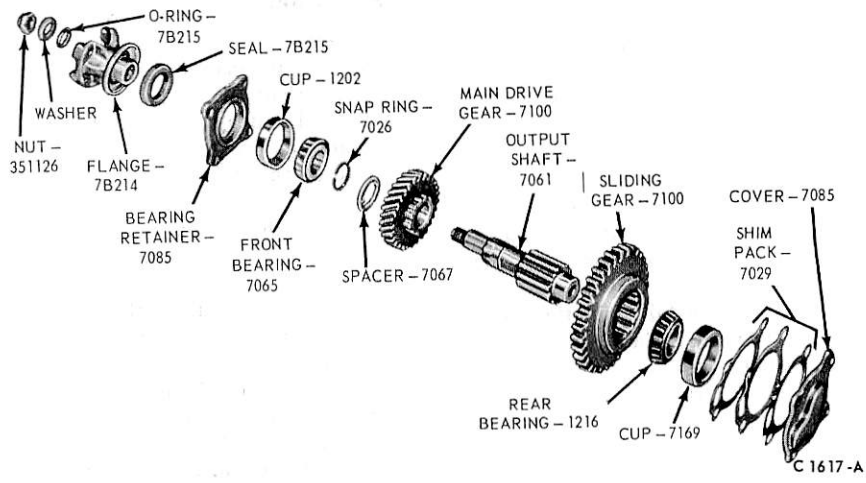

FIG. 11 Front Output Shaft—Disassembled

SHIFT RAIL OIL SEALS

Disassembly

1. Remove the shift rail seals as shown in Fig. 19.

Assembly

1. Install the two shift rail oil seals, using the tool shown in Fig. 20.

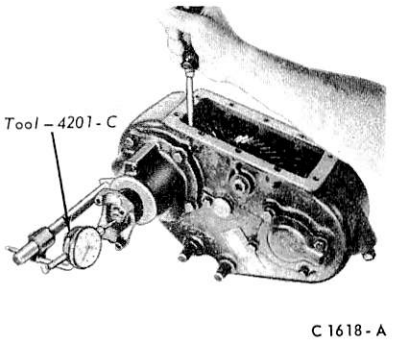

FIG. 12 Checking Front Drive Output Shaft End Play

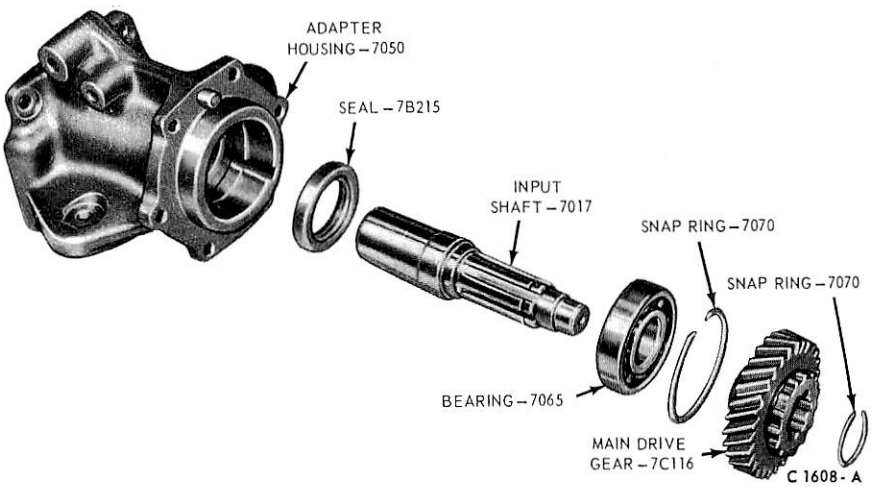

FIG. 13 Input Shaft—Disassembled

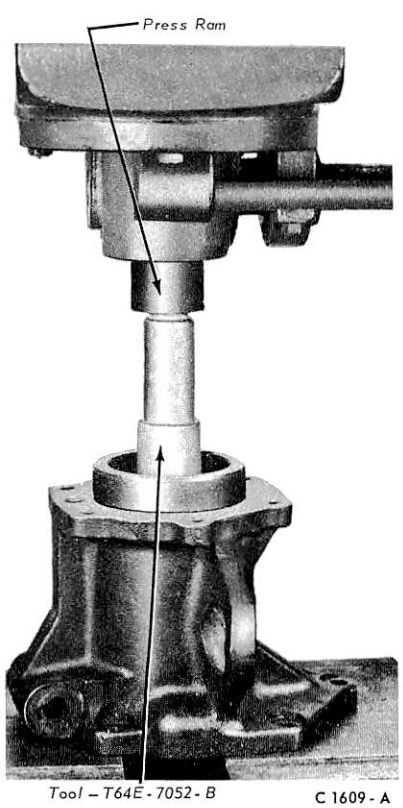

FIG. 14 Installing Adapter Housing Seal

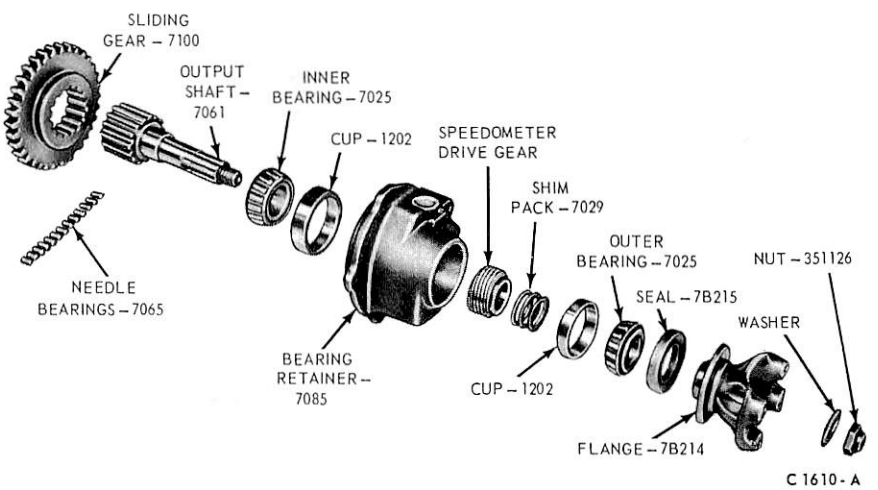

FIG. 15 Rear Drive Output Shaft—Disassembled

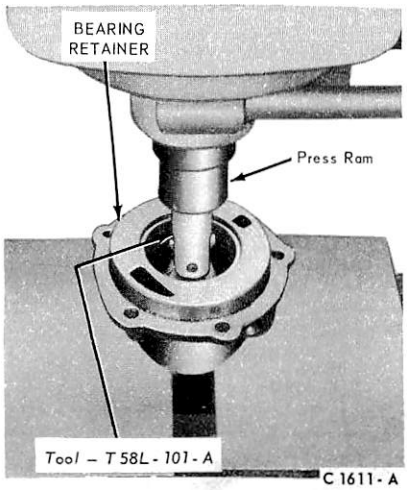

FIG. 16 Removing Rear Bearing Retainer Outer Cup, Bearing and Seal

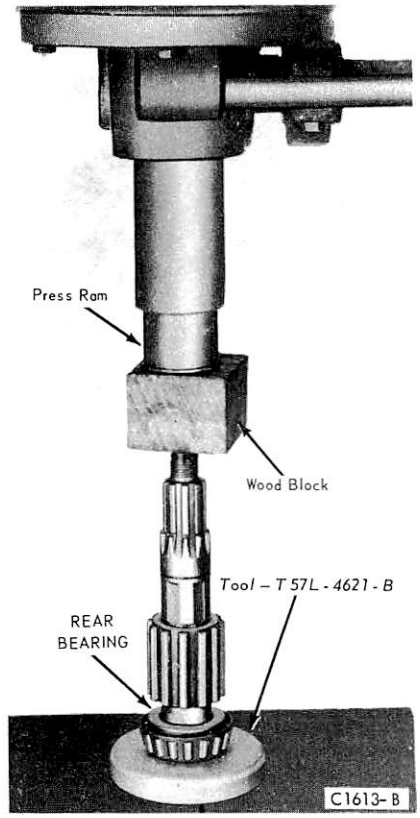

FIG. 18 Installing Front Output Shaft Rear Bearing

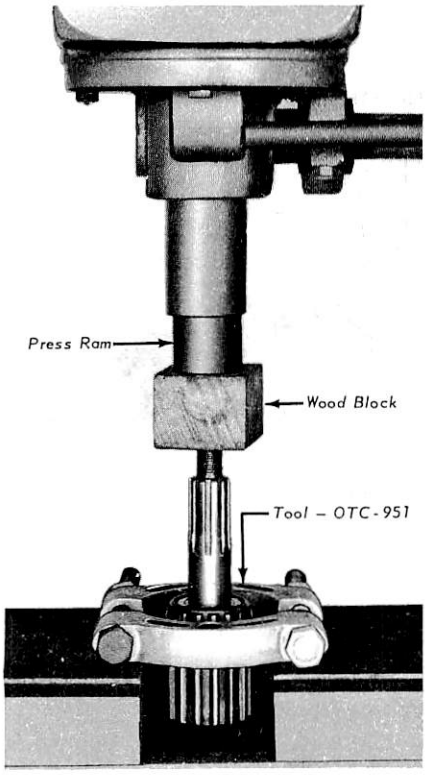

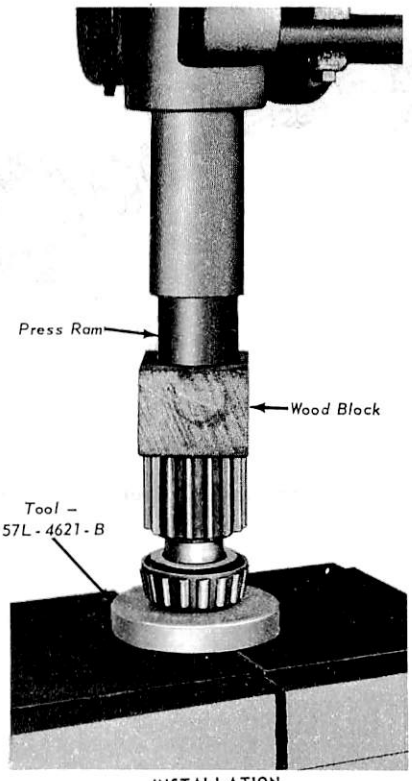

FIG. 17 Replacing Output Shaft Inner Bearing

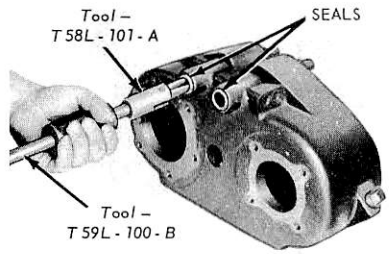

FIG. 19 Removing Shift Rail Seals

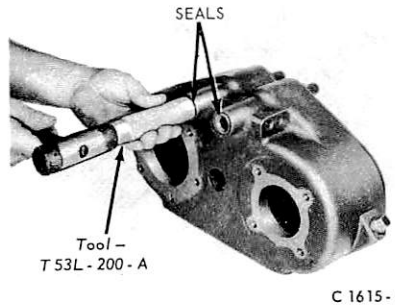

FIG. 20 Installing Shift Rail Seals

SPECIFICATIONS

APPROPRIATE LUBRICANT REFILL CAPACITY – PINTS

Transfer Case – Dana 20	US	IMP
SAE 50 Engine Oil (ESE-M2C39-A)	2.75	2.25

ADJUSTMENTS – BRONCO TRANSFER CASE

Front Drive Output Shaft – End Play	0.001-0.005 in.
Rear Drive Output Shaft – End Play	0.001-0.005 in.

BRONCO 4 x 4 TRANSFER CASE TORQUE LIMITS

Description	Ft-Lbs
Transmission Case to Transmission Extension Bolts	20-30
Gear Transfer Case to Transmission Output Shaft Nut	125-150
Front Output Shaft Rear Cover Bolts	25-32
Front Output Shaft Bearing Retainer Bolts	25-32
Idler Shaft Cover Bolts	25-32

CC1068-B

PART 16-81 Dana 21 Four-Wheel Drive Transfer Case

Applies To F-100 (4 x 4) Only

COMPONENT INDEX	Page	COMPONENT INDEX	Page
TRANSFER CASE		TRANSFER CASE - Continued	
Assembly	81-02	Installation	81-02
Description	81-01	Rear Drive Output Shaft Bearings	
Disassembly	81-02	Installation	81-04
Front Drive Output Shaft Bearing		Removal	81-04
Installation	81-04	Removal	81-02
Removal	81-04	Specifications	81-05
Idler Shaft Bearing			
Installation	81-04		
Removal	81-04		

DESCRIPTION

TRANSFER CASE

A manually shifted single-speed transfer case in the F-100 4 x 4 transmits the power from the engine and transmission to the front and rear axles. There are two positions for the transfer case; front axle drive engaged and front axle drive disengaged (Fig. 1).

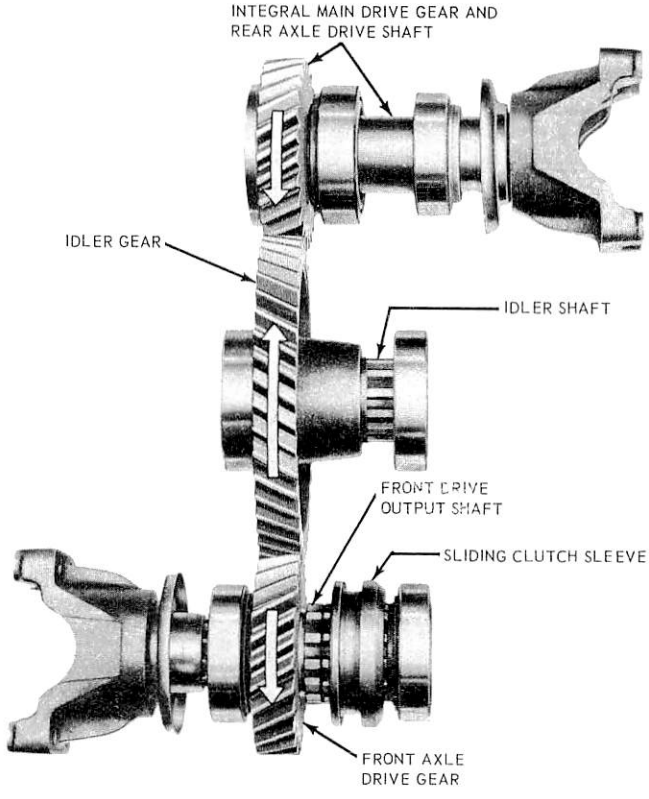

FIG. 1 Transfer Case Gear Train

REMOVAL AND INSTALLATION

TRANSFER CASE

Removal

1. Raise the vehicle on a hoist.
2. Disconnect the front and rear drive shafts at the transfer case.
3. Disconnect the shift rod from the transfer case shift lever arm.
4. Remove the bolts and nuts that attach the transfer case to the transmission extension housing, and remove the transfer case from under the vehicle.

Installation

1. Using a new gasket, position the transfer case to the extension housing and install the attaching bolts and nuts.
2. Connect the shift rod to the shift lever arm and secure with the spring washer, flat washer, and cotter pin.
3. Connect the front wheel drive shaft to the transfer case, and torque the bolts to specifications.
4. Connect the rear axle drive shaft to the transfer case, and torque the bolts to specifications.
5. Lower the vehicle and check for proper shift operation.

DISASSEMBLY AND ASSEMBLY

TRANSFER CASE

Disassembly

1. Clean the dirt from the transfer case and drain the lubricant.
2. Remove the bolts that attach the cover to the top of the case, and remove the cover (Fig. 2).
3. Remove the set screw securing the shift fork to the shift rail. Slide the shift rail out of the case.
4. Remove the shift fork from the case.
5. Remove the detent spring and ball that engages the front drive shift rail.
6. Remove the flange attaching nuts, flat washer, and O-ring from the front and rear output shafts. Discard the O-rings.
7. Remove the flange from the front and rear output shafts (Fig. 3).
8. Remove the bolts that attach the rear output shaft bearing retainer to the case, and remove the retainer and output shaft as an assembly.
9. Remove the front and rear idler shaft covers.
10. Using a hammer and soft drift, drive the idler shaft and rear idler bearing rearward and out of the case (Fig. 4). Then, lift the front bearing and idler gear from the case.
11. Remove the front output shaft bearing retainer and gasket. Remove the retainer seal if it is worn or damaged.
12. Remove the front output shaft rear cover and shims. Tie the shims together.
13. Tap the end of the front output shaft toward the front of the case to remove the front bearing cup. Remove the rear bearing cup by tapping the front output shaft rearward.

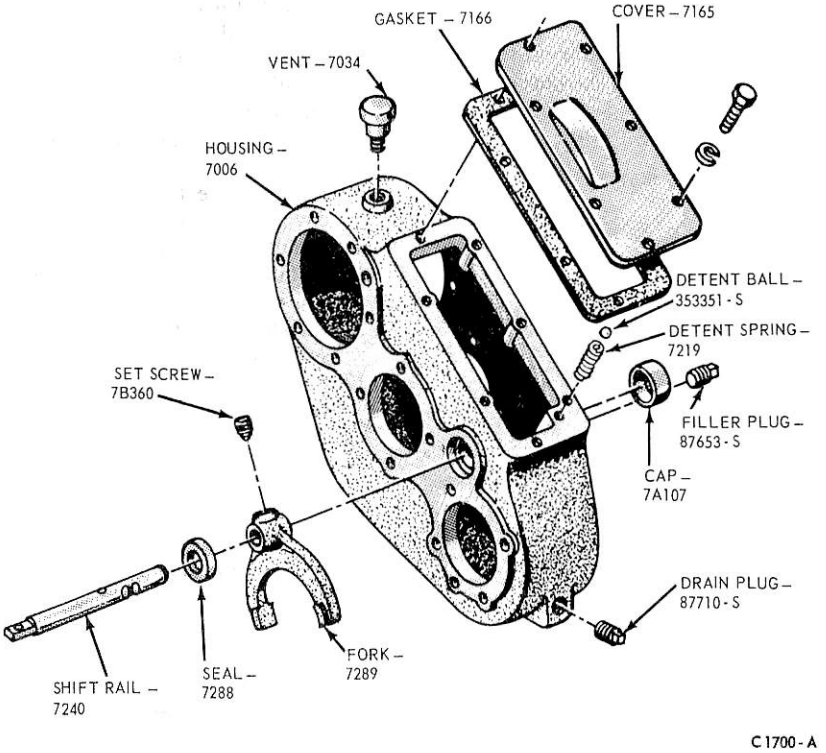

FIG. 2 Transfer Case Housing and Related Parts

14. Wedge the front output shaft front bearing away from the main drive gear to allow removal of the snap ring from its groove in the shaft. Then, drive the output shaft and rear bearing out of the case.
15. Lift the sliding gear, main drive gear, front bearing, thrust washer, and snap ring from the case.
16. Remove the shift rail seal from the case if it is worn or damaged.

Assembly

1. While holding the drive gear, sliding gear and thrust washer in the case, install the frontput shaft through the gears and washer from the rear of the case (Fig. 5). Install the snap ring.
2. Install the front output shaft rear bearing cup.
3. Position the front output shaft rear cover and shims to the case. After

removing old sealant from all parting surfaces with lacquer thinner, apply gasket sealer C6TZ-19554-A to the attaching bolts and torque to specifications. With the cover installed, apply gasket sealer C6TZ-19554-A to the outside edge of the adjusting shims, case and cover parting lines.

4. Using Tool T55P-7567-A, install the front output shaft front bearing on the shaft. Install the front bearig the shaft. Install the front bearing (Fig. 5).
5. If the front bearing retainer oil seal was removed, install a new seal using Tool T60K-7657-B. Position the bearing retainer and gasket to the case, and install the attaching bolts.
6. Install the flange, O-ring washer, and attaching nut on the front output shaft, using Tool T57T-4851-B. Be sure a new O-ring is installed on the shaft.
7. Install a dial indicator on the front drive output shaft and check the end play as shown in Fig. 6. The end play should be 0.003-0.005 inch. If not within these limits, increase or decrease the shim pack thickness at the front output shaft rear cover.
8. Position the idler gear in the case, and install the idler shaft through the gear. Install the front bearing on the shaft.
9. Position the front and rear idler covers and gaskets to the case, and install the attaching bolts.
10. Install a new shift rail seal in the case if it was removed.
11. Install the shift rail detent ball and spring in the top of the case.
12. Slide the shift rail into the front of the case, and position the shift fork on the rail as the rail enters the case. Depressing the detent ball and spring will allow the rail to pass. Secure the fork to the rail with the set screw.
13. Position the rear output shaft and bearing retainer assembly to the case, and install the attaching bolts.
14. Install the flange, O-ring, washer, and attaching nut on the rear output shaft, using Tool T58T-4851. Be sure a new O-ring is installed on the shaft.
15. Position the top cover and gasket to the case and install the attaching bolts.
16. Fill the transfer case to the proper level with the recommended lubricant.

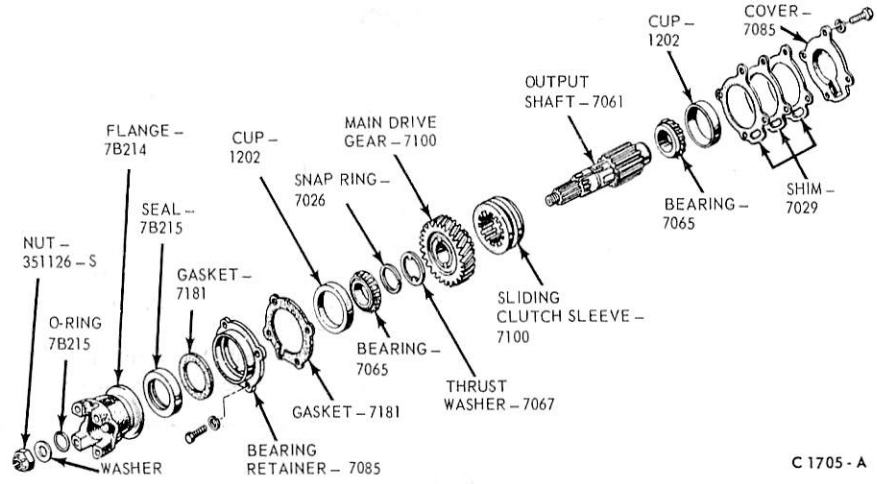

FIG. 5 Front Output Shaft—Disassembled

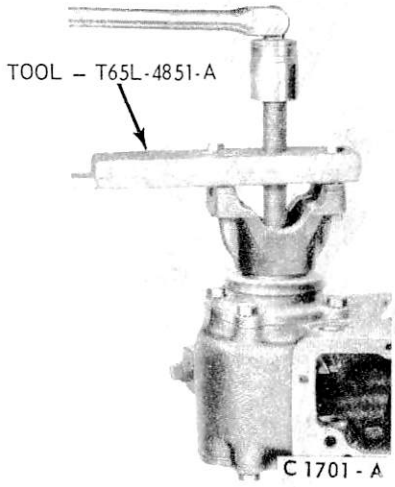

FIG. 3 Removing Flange

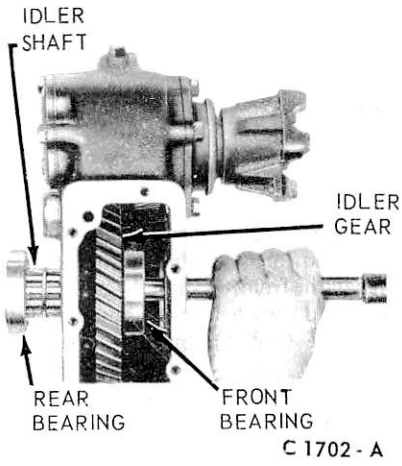

FIG. 4 Removing Idler Shaft

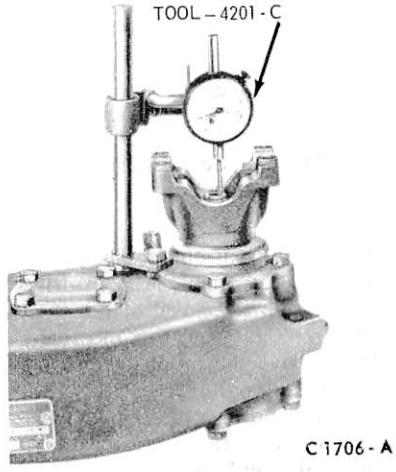

FIG. 6 Checking Front Drive Output Shaft End Play

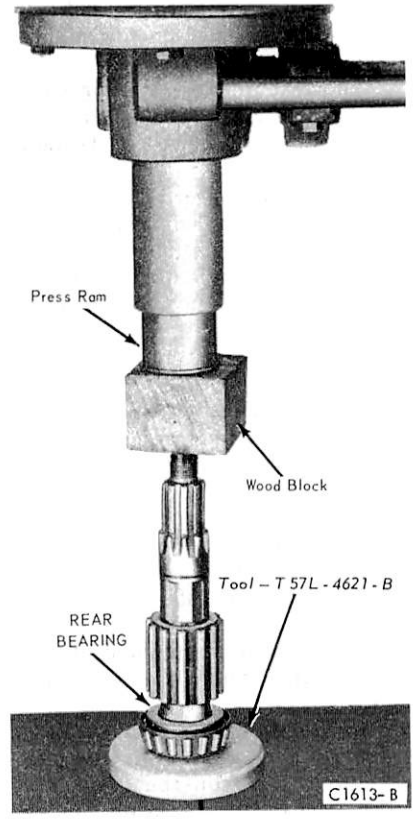

FIG. 7 Installing Front Output Shaft Rear Bearing

SUB-ASSEMBLIES

FRONT DRIVE OUTPUT SHAFT BEARING

Removal

1. To remove the front output shaft rear bearing, use the sliding gear as a base and press the bearing from the shaft.

Installation

1. Install the bearing as shown in Fig. 7.

IDLER SHAFT BEARING

Removal

1. Remove the snap ring from the idler shaft (Fig. 8).
2. Using the idler gear as a base, press the idler shaft out of the rear bearing.

Installation

1. Using a press, install the rear idler bearing on the idler shaft. Install the snap ring.

REAR DRIVE OUTPUT SHAFT BEARINGS

Removal

1. Tap the output shaft rearward to remove the shaft from the bearing retainer. Remove the shims and spacer from the shaft (Fig. 9).
2. Using Tool OTC-951, remove the inner bearing from the output shaft.
3. Place the bearing retainer on a press, and press out the outer cup, outer bearing, and oil seal using Tool T57T-7003-A.
4. Using a soft drift, drive the inner bearing cup from the retainer.

Installation

1. Press the inner bearing on the output shaft with Tool T53T-4621-B.
2. Using a soft hammer, tap the inner bearing cup into the bearing retainer.
3. Install the outer cup with Tool T60K-7657-B.
4. Place the spacer and shims on the output shaft and install the shaft in the bearing retainer housing.

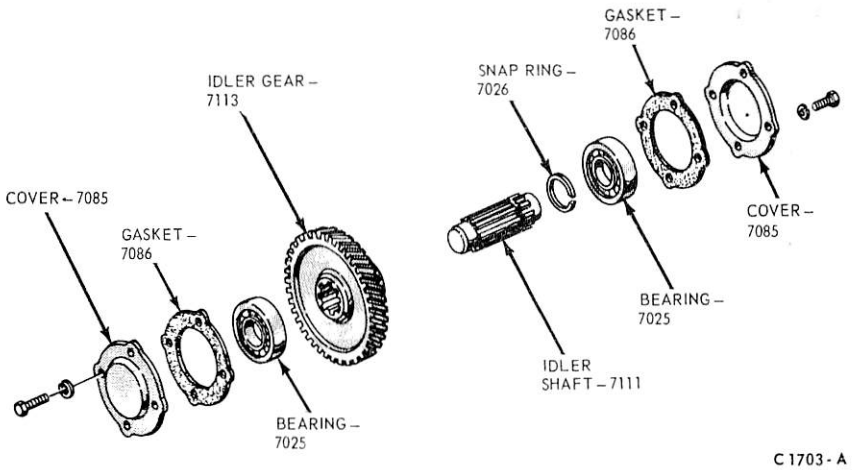

FIG. 8 Idler Shaft—Disassembled

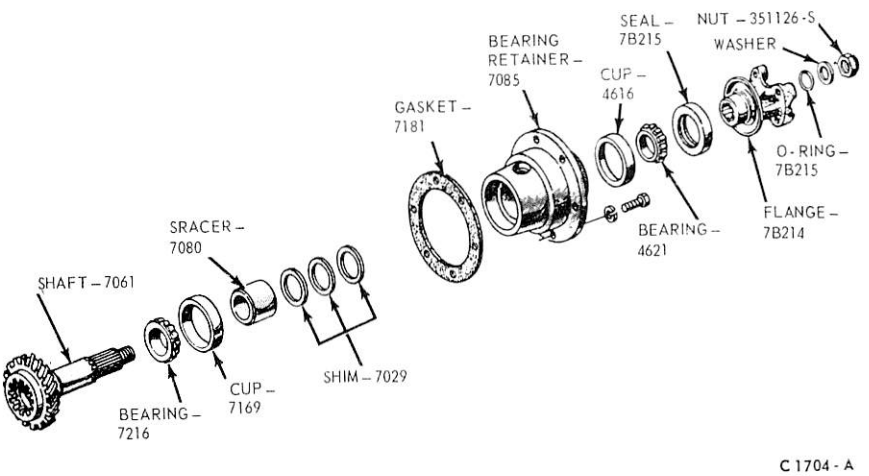

FIG. 9 Rear Drive Output Shaft—Disassembled

5. Install the outer bearing on the output shaft with Tool T55P-7657-A.
6. Place the bearing retainer and output shaft in a vise. Install a dial indicator on the end of the output shaft, and check the end play. The end play should be 0.003-0.005 inch. If not within these limits, adjust the shim pack (Fig. 4) between the spacer and the front and rear bearing cones.
7. After establishing the correct end play, install the bearing retainer seal in the housing with Tool T53T-7065-B.

SPECIFICATIONS

APPROXIMATE LUBRICANT REFILL CAPACITY

Transfer Case – Dana 21	US	IMP
SAE 50 Engine Oil (ESE-M2C39-A)	4.5	3.75

ADJUSTMENTS F-250 4x4

Front Drive Output Shaft–End Play	0.001-0.005 inch
Rear Drive Output Shaft–End Play	0.001-0.005 inch

F-100 4x4 TRANSFER CASE TORQUE LIMITS

DESCRIPTION	FT LBS
Transfer Case to Transmission Extension Bolts	20-30
Transfer Case Shaft Nut	125-150
Front Output Shaft Rear Cover Bolts	25-32
Front Output Shaft Bearing Retainer Bolts	25-32
Idler Shaft Cover Bolts	25-32

CC1032-C

PART 16-82 Dana 24 Transfer Case

Applies to F-250 Only			
COMPONENT INDEX	**Page**	**COMPONENT INDEX**	**Page**
FRONT OUTPUT SHAFT BEARING		SPECIFICATIONS	82-06
Replacement	82-04	TRANSFER CASE	
IDLER SHAFT BEARING		Assembly	82-03
Replacement	82-04	Description	82-01
OIL SEAL		Disassembly	82-03
Replacement	82-04	Installation	82-02
REAR OUTPUT SHAFT BEARING		Removal	82-02
Replacement	82-04		

DESCRIPTION

TRANSFER CASE

A manually-shifted 2-speed transfer case in the 4-Wheel Drive F-250 controls the power from the engine and transmission to the front and rear driving axles (Fig. 1). The transfer case shift lever positions, from front to rear, are 4L (low gear, all wheels), N (neutral), 2H (high gear, rear wheels), and 4H (high gear, all wheels).

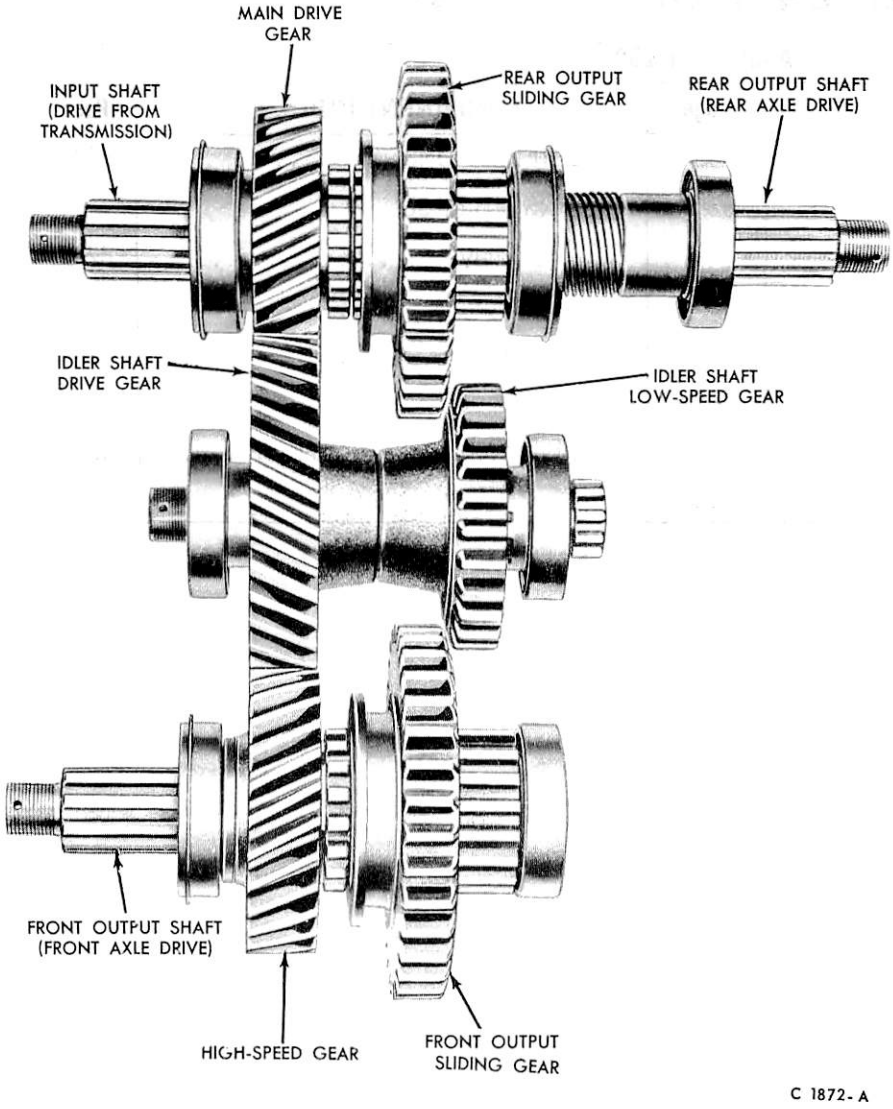

FIG. 1 Transfer Case Gear Train in Neutral

REMOVAL AND INSTALLATION

TRANSFER CASE

Removal

1. Drain the transfer case, and disconnect the rear axle drive shaft from the flange at the transfer case (Fig. 2).
2. Disconnect the front wheel drive shaft and the transmission output shaft at the transfer case.
3. Disconnect the shift selector rod and the speedometer cable at the transfer case.
4. Secure the transfer case to a transmission jack, and remove the mounting bolts.
5. Remove the transfer case, and mount it on a floor stand.

Installation

1. Remove the transfer case from the floor stand and place it on the transmission jack.
2. If necessary to replace a mounting stud, see Fig. 3 for correct positioning of the components.
3. Raise the transfer case into position on the mounting bolts, and install the retaining nuts and lock washers (Fig. 2). Torque the nuts to specification, and remove the jack.
4. Connect the shift selector rod and the speedometer cable.
5. Connect the transmission output shaft. Torque the U-bolt nuts to specification.
6. Connect the front axle drive shaft and torque the universal joint U-bolt nuts to specification.
7. Fill the transfer case to filler plug level with the specified lubricant.

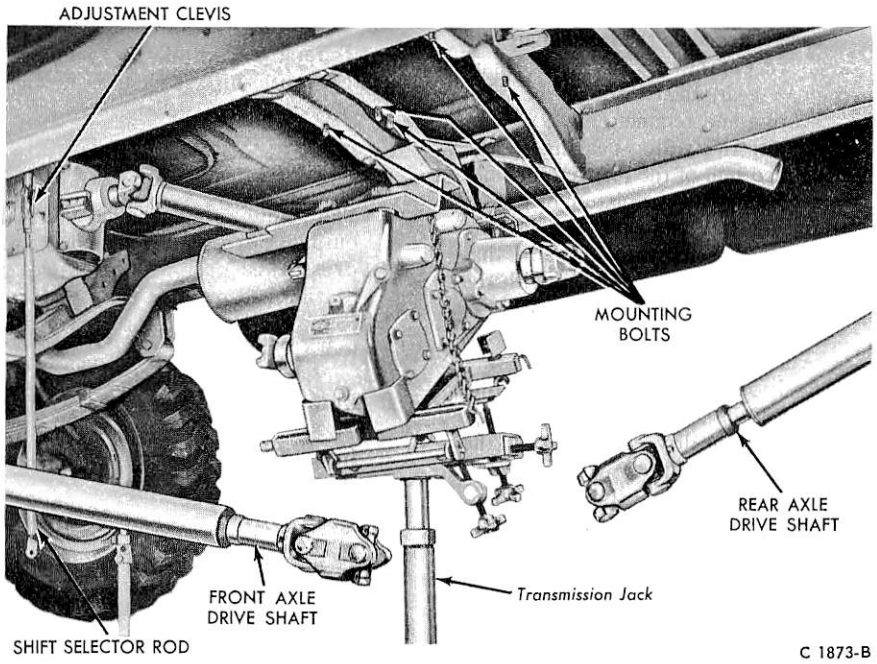

FIG. 2 Removing or Installing Transfer Case

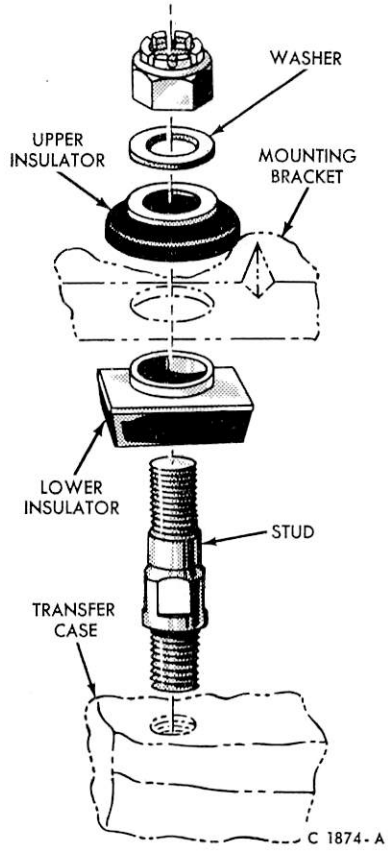

FIG. 3 Transfer Case Mounting Stud

DISASSEMBLY AND ASSEMBLY

TRANSFER CASE

Disassembly

1. Clean the dirt from the transfer case, and remove the power take-off cover plate (Fig. 4).
2. Remove both idler shaft bearing retainers.
3. Using a soft hammer, tap the idler shaft and bearing to the rear until the bearing is free of the case.
4. Remove the idler shaft, two gears and spacer.
5. Remove the idler shaft front bearing from the case.
6. Remove the flange retaining nuts from the front output shaft, the input shaft, and the rear output shaft (Fig. 5).
7. Remove the flanges and washers from the front output shaft, the input shaft, and the rear output shaft (Fig. 6).
8. Remove the front output shaft front and rear bearing retainers.
9. Tap the front output shaft and rear bearing through the gears and case (Fig. 7). Lift the high speed gear from the case.
10. Remove the front output shaft front bearing and washer from the case.
11. Remove the set screw that retains the front drive shaft fork to the shift rail (Fig. 7).
12. Remove the front output shaft sliding gear from the case.
13. If the input shaft oil seal is to be replaced, remove it with a four-jaw puller and slide hammer. Otherwise, leave the oil seal in the front bearing retainer.
14. Remove the input shaft bearing retainer.
15. If the output shaft bearing retainer oil seal is to be replaced, remove it with a puller and slide hammer. Otherwise, leave the oil seal in the bearing retainer.
16. Remove the rear output shaft bearing retainer, and then remove the speedometer drive assembly from the bearing retainer.
17. Loosen the rear output shaft assembly from the case by driving on the front end of the input shaft with a mallet.
18. Remove the rear output shaft and bearing retainer as an assembly (Fig. 8).
19. Tap the input shaft through the front bearing, through the main drive gear, through the sliding gear, and out of the case (Fig. 9).

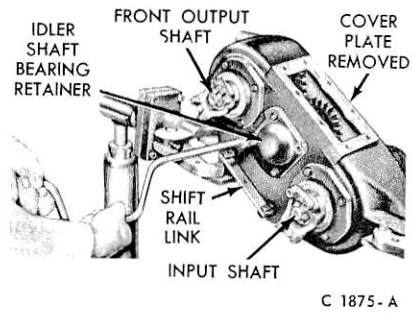

FIG. 4 Front Side of Transfer Case

20. Lift the main drive gear out of the case, and then drive the input shaft front bearing from the case with a mallet.
21. Remove the set screw that retains the rear drive shift fork to the shift rail (Fig. 10).
22. Remove the rear output shaft sliding gear from the case.
23. Remove the shift rail link from the two shift rails (Fig. 4).
24. Remove the retaining plug, detent spring, and ball that engages the front drive shift rail detent rod (Fig. 11).
25. Remove the retaining plug detent spring, and ball that engages the rear drive shift rail detent rod. Then remove the front drive detent rod access hole plug (Fig. 12).
26. Pull the front drive shift rail to the maximum outward position.
27. Pull the rear drive shift rail out far enough to allow the two detent rods to slide out of the case (Fig. 13).
28. Remove the rear drive shift rail and fork from the case.
29. Remove the rear drive shift rail and shift fork from the case.
30. Remove the shift rail seals (Fig. 14).

Assembly

1. Slide the front drive shift rail all the way into the case, and position the shift fork on the rail as the rail goes into the case.
2. Install the two detent rods in the case (Fig. 13).
3. Install the rear drive shift fork, and hold the detent rods and the shift fork in place as the **rear drive** shift rail is pushed in as far as it will go.
4. Pull the **front drive** shift rail out to its next detent. This will permit the **rear drive** shift rail to be pushed in to the full extent of its travel. After pushing the **rear drive** shift rail all the way in, push the **front drive** shift rail back to its extreme inward position.
5. Install the rear drive shift rail detent ball, spring and retaining plug, and then install the access hole plug (Fig. 12).
6. Install the front drive shift rail detent ball, spring and retaining plug (Fig. 11).
7. Secure the shift rail link in the two shift rails.
8. Position the rear output sliding gear in the shift fork, secure the fork to the rear drive shift rail with the set screw (Fig. 10).
9. Install the input shaft front bearing and retainer assembly. Coat the retainer and bolts with sealer.
10. Position the main drive gear in the case. Then slide the input shaft into the rear of the case through the main drive gear, then through the front bearing and retainer (Fig. 9).
11. Install the roller bearing in the splined hub of the rear output shaft assembly with petrolatum or grease. Then install the shaft and bearing retainer assembly, making sure that the output shaft is aligned with the input shaft (Fig. 8). Coat the case, bearing retainer and bolts with sealers.
12. Position the front output sliding gear in the shift fork, secure the fork to the front drive shift rail with the set screw.
13. While holding the sliding gear and high speed gear in position, install the front output shaft and rear bearing assembly through the two gears from the rear of the case (Fig. 7).
14. After coating the retainer and bolts with sealer, install the front output shaft rear bearing retainer and gasket.
15. Install the washer and front bearing over the front output shaft at the front of the case (Fig. 7), and then install the front bearing retainer and gasket. Coat the retainer with sealer.
16. Install the flange, washer, flange retaining nut and cotter key on each of the three shafts, using the tool shown in Fig. 5. Torque the nuts to specification.
17. Position the idler shaft gears in the case and install the idler shaft and rear bearing assembly from the rear of the case. After applying sealer to the plate and bolts, install the rear bearing retainer plate.
18. Position the spacer on the front end of the idler shaft and install the front bearing. Tap the bearing lightly with a mallet.
19. Install the washer, retaining nut and cotter pin on the front end of the idler shaft.
20. After applying sealer to the plate and bolts, install the idler shaft front bearing retainer plate.
21. After applying sealer to the plate and bolts, install the power take-off cover plate.

SUB-ASSEMBLIES

IDLER SHAFT BEARING

To remove or install the idler shaft rear bearing, use the tool shown in Fig. 15.

FRONT OUTPUT SHAFT BEARING

To remove or install the front output shaft rear bearing, use the tool shown in Fig. 15.

REAR OUTPUT SHAFT BEARING

Disassembly

1. Place the bearing retainer and rear output shaft assembly in a press, and press the shaft out of the rear bearing and retainer.
2. Remove the front bearing with the tool shown in Fig. 15.

Assembly

1. Install the front bearing as shown in Fig. 16.
2. Install the rear bearing and retainer (Fig. 17).

OIL SEALS

To install a new oil seal in any of the bearing retainers, press the seal into the retainer with the tool shown in Fig. 18.

1. Install the two shift rail oil seals in the case, using the tool shown in Fig. 19.

In steps 2 and 3, the shift rails should be inserted so that the detents are positioned as shown in Fig. 20.

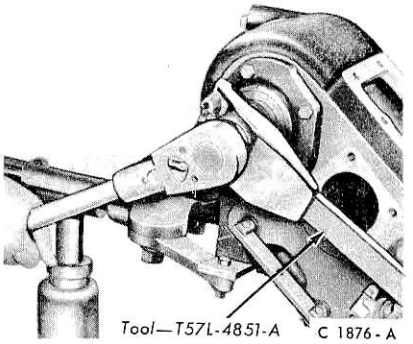

FIG. 5 Removing or Installing Flange Retaining Nut

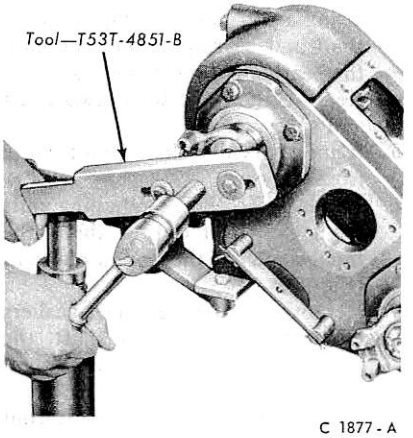

FIG. 6 Removing Flange

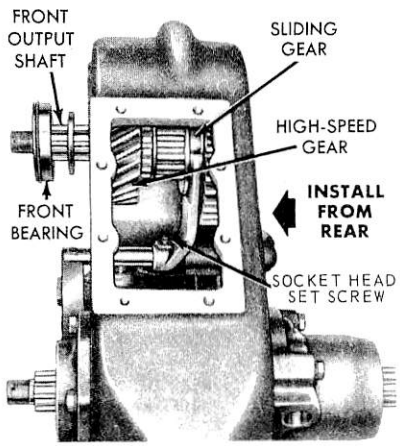

FIG. 7 Removing or Installing Front Output Shaft

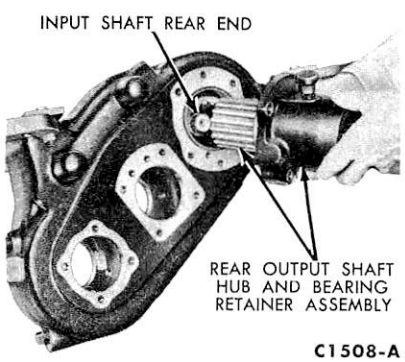

FIG. 8 Removing or Installing Rear Output Shaft Bearing

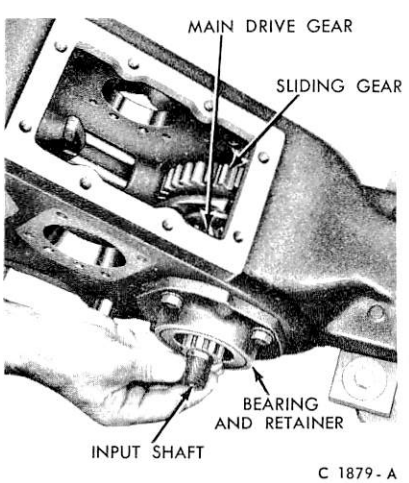

FIG. 9 Removing or Installing Input Shaft

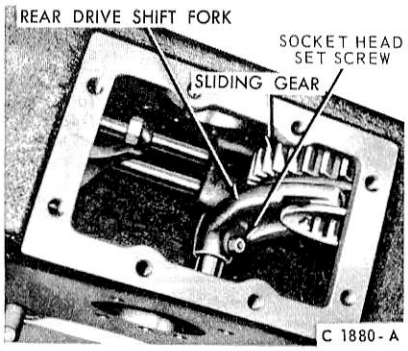

FIG. 10 Rear Drive Shift Fork and Sliding Gear

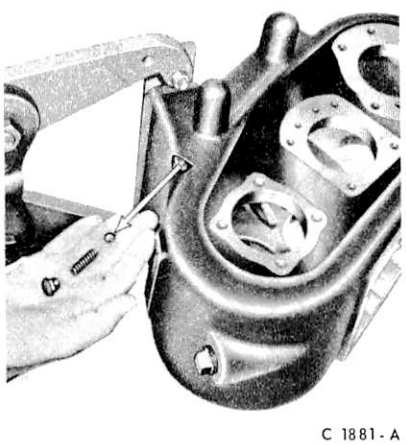

FIG. 11 Front Drive Shift Rail Detent Ball, Spring and Plug

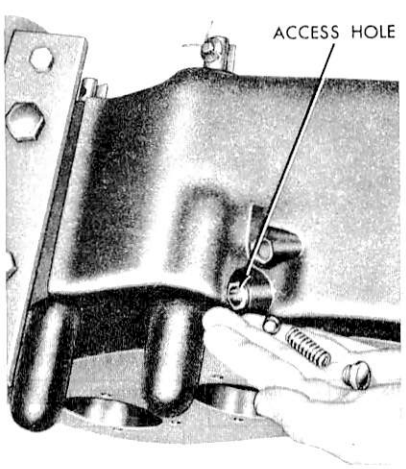

FIG. 12 Rear Drive Shift Rail Detent Ball, Spring and Plug

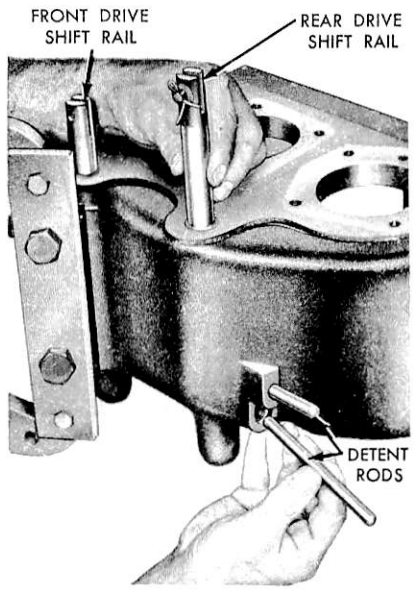

FIG. 13 Shift Rails and Detent Plugs

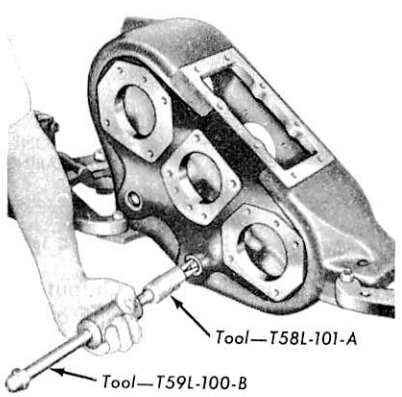

FIG. 14 Removing Shift Rail Seal

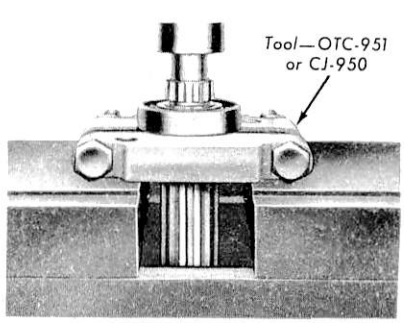

FIG. 15 Removing Idler Shaft Rear Bearing

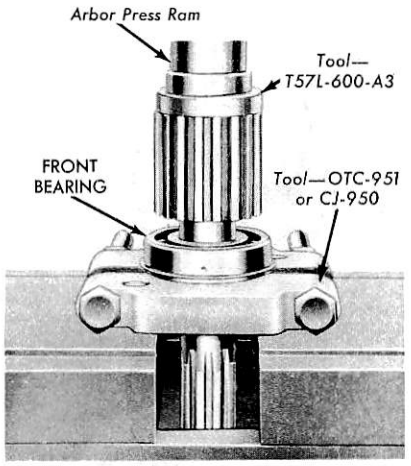

FIG. 16 Installing Rear Output Shaft Front Bearing

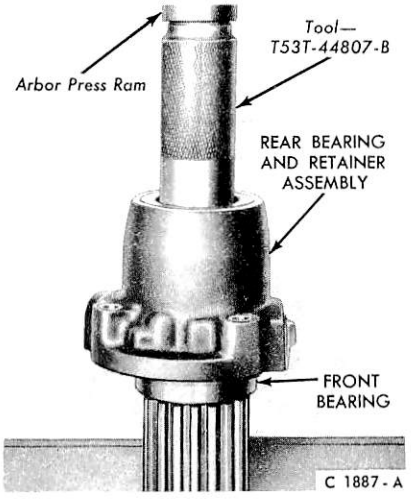

FIG. 17 Installing Rear Output Shaft Rear Bearing and Seal

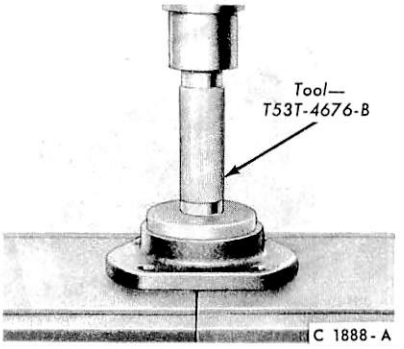

FIG. 18 Installing Bearing Retainer Oil Seal

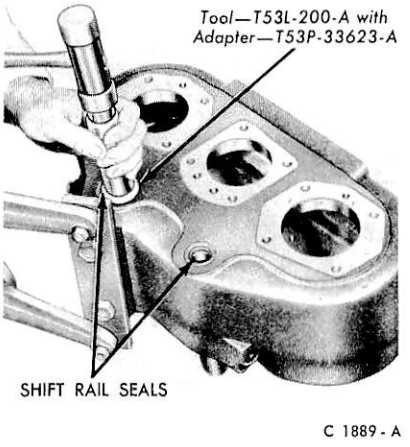

FIG. 19 Installing Shift Rail Oil Seal

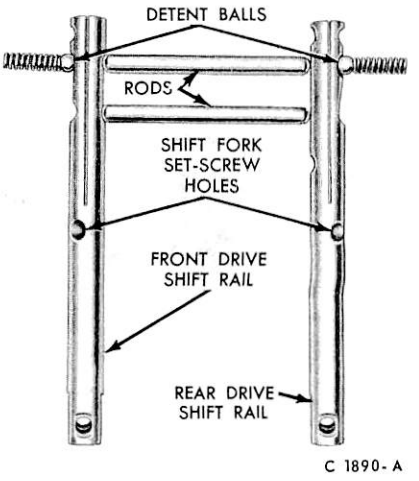

FIG. 20 Shift Mechanism

SPECIFICATIONS

APPROXIMATE LUBRICANT REFILL CAPACITY – PINTS

Transfer Case – Dana 24	US	IMP
SAE 50 Engine Oil (ESE-M2C39-A)	4.5	3.75

F-250 4 x 4 TRANSFER CASE TORQUE LIMITS

Description	Ft-Lbs
Transfer Case to Transmission Extension Bolts	20-30
Transfer Case Output Shaft Nut	125-150
Front Output Shaft Rear Cover Bolts	25-32
Front Output Shaft Bearing Retainer Bolts	25-32
Idler Shaft Cover Bolts	25-32

CC1075-B

PART 16-83 Rockwell 223-C9 Transfer Case

Applies To F-600 4 x 4

COMPONENT INDEX	Page	COMPONENT INDEX	Page
ASSEMBLY OF CASE	83-07	DISASSEMBLY OF SUB-ASSEMBLIES	
ASSEMBLY OF SUBASSEMBLIES		Idler Shaft	83-07
Idler Shaft	83-07	Input Shaft	83-07
Input Shaft	83-07	Front Output Gear	83-07
Front Output Gear	83-07	Front Output Shaft	83-06
Front Output Shaft	83-07	Parking Brake	83-06
Parking Brake	83-08	Rear Output Shaft	83-07
Rear Output Shaft	83-07	Shift Components	83-06
Shift Components	83-08	INSTALLATION	83-06
DESCRIPTION	83-01	LINKAGE ADJUSTMENT	83-06
DISASSEMBLY OF CASE	83-06	REMOVAL	83-06

DESCRIPTION

TRANSFER CASE

The Rockwell 223-C9 transfer case (Figs. 1, 3 and 4) is a two-speed unit used to transmit power to both the front and rear driving axles on the Ford F-600 4 x 4 truck.

An internal-expanding parking brake is mounted on this transfer case.

A two-lever control system for the unit is mounted in the truck cab.

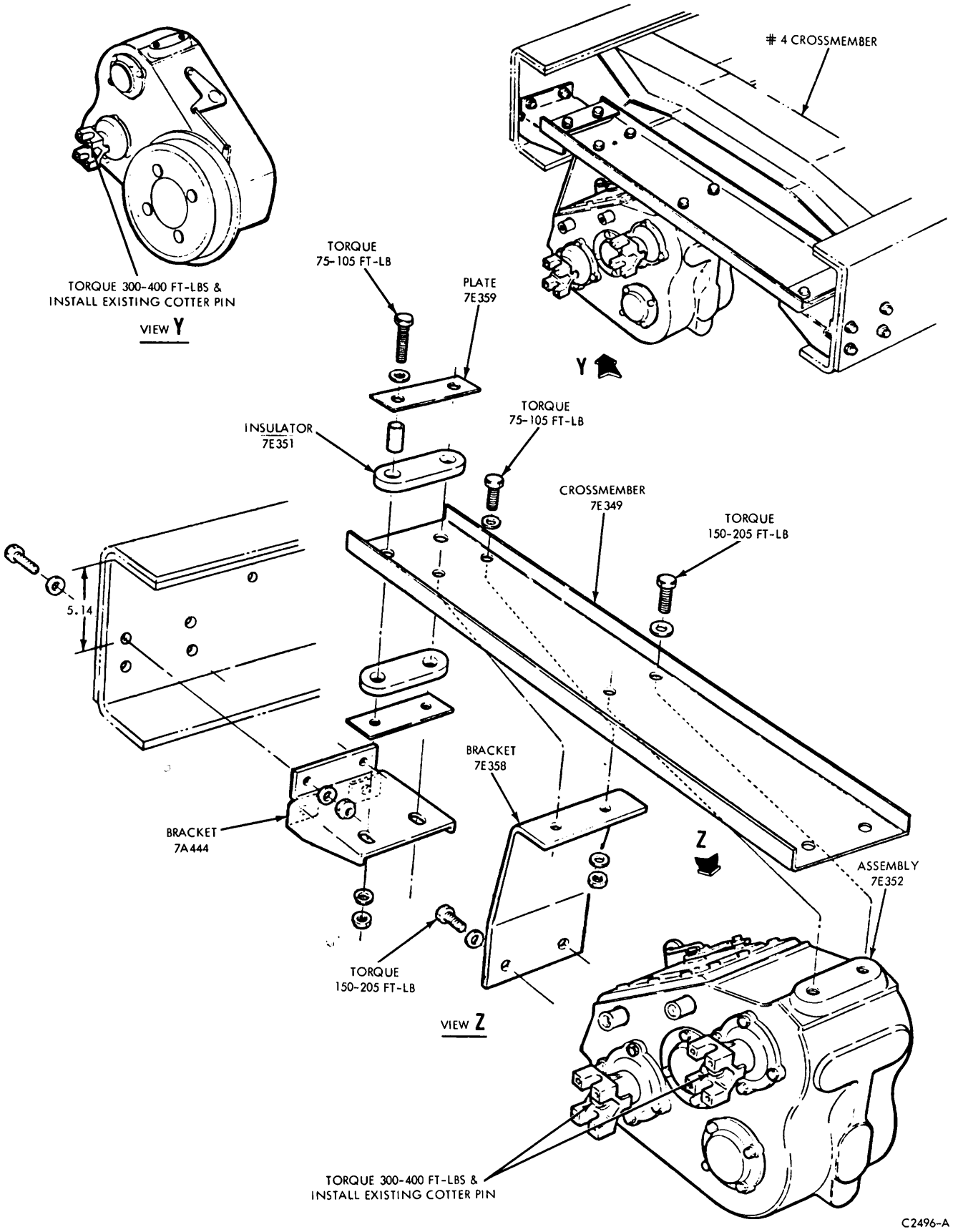

FIG. 1 Rockwell 223 Transfer Case Installation

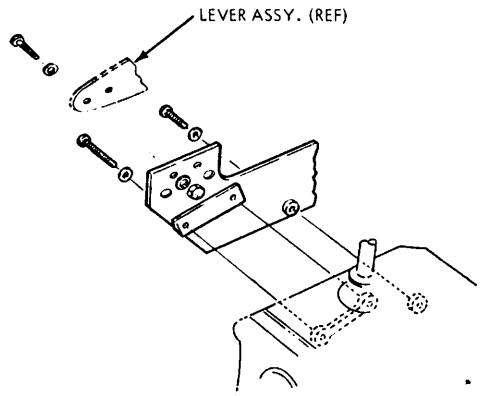

VIEW FOR CLARK 285 TRANSMISSION

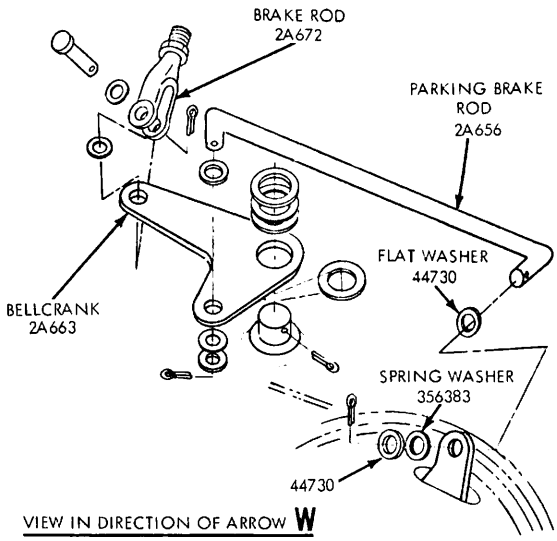

VIEW IN DIRECTION OF ARROW **W**

LOCATE BRAKE LEVER ASSY 2780 IN OFF POSITION WITH BRAKE ROD ASSY ATTACHED - REMOVE FREE PLAY IN PARKING BRAKE MOVE BELLCRANK TO ADJUST CLEVIS AND INSTALL PIN, WASHERS AND COTTER PIN.
TIGHTEN JAM NUT.

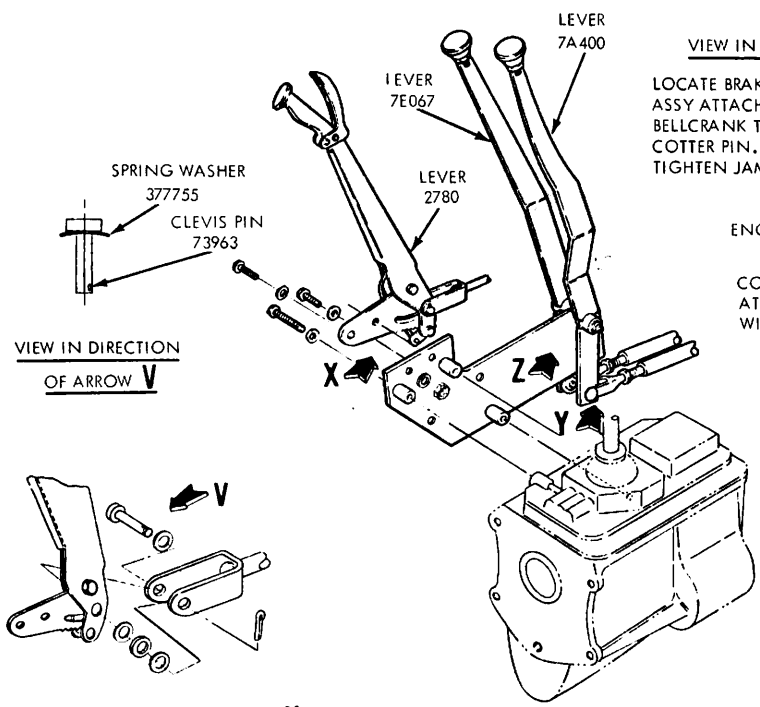

VIEW IN DIRECTION OF ARROW **V**

VIEW IN DIRECTION OF ARROW **X**
FOR T-19 & 285 LEVER ASSY.

VIEW FOR WARNER T-19 TRANSMISSION

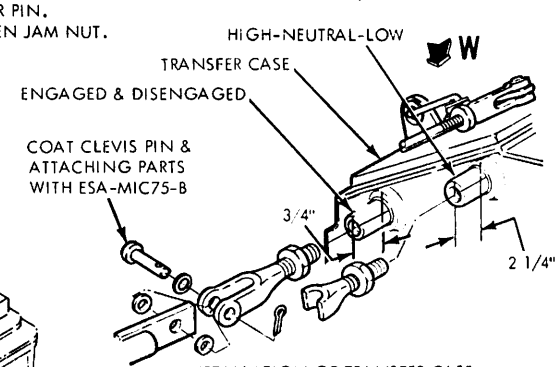

INSTALLATION OF TRANSFER CASE CONTROL LEVER ROD & SHIFT LEVER ROD (TRANSFER CASE END)

RODS ARE TO BE SET TO THESE DIMENSIONS PRIOR TO INSTALLATION	A
ENGAGED & DISENGAGED ROD	41.52
HIGH-NEUTRAL-LOW ROD	40.18

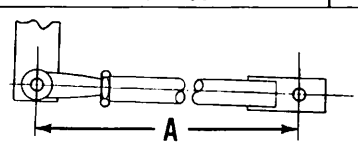

RUN JAM NUT ON EACH CLEVIS FULL THREAD. THEN INSTALL CLEVISES IN TRANSFER CASE SO THEY BOTTOM IN SHIFT RAILS. BACK OFF CLEVISES (NOT OVER 90°) SO CLEVIS PINS ARE HORIZONTAL TO GROUND AND TIGHTEN JAM NUTS.
WHEN ADJUSTING CONTROL & SHIFT LEVER RODS THE LEVERS SHOULD BE 3.4" FROM SEAT CUSHION FRAME WITH SEAT IN FULL FORWARD POSITION-THE SHIFT RAILS IN TRANSFER CASE SHOULD BE LOCATED IN DETENT DISENGAGE & LOW POSITION AS SHOWN ABOVE

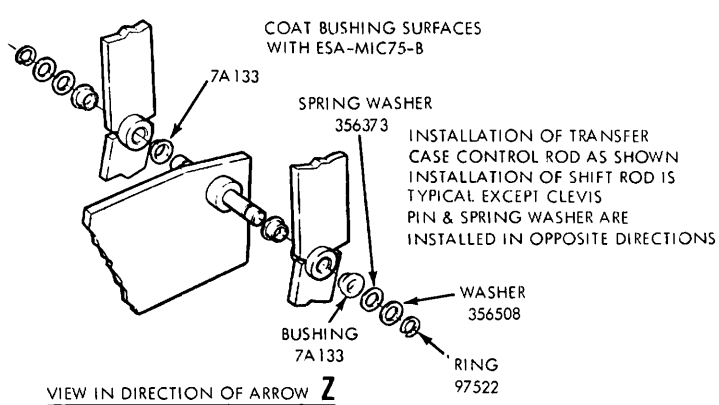

VIEW IN DIRECTION OF ARROW **Z**

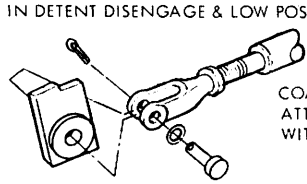

VIEW IN DIRECTION OF ARROW **Y**

C2497-A

FIG. 2 Rockwell 223 Transfer Case Controls

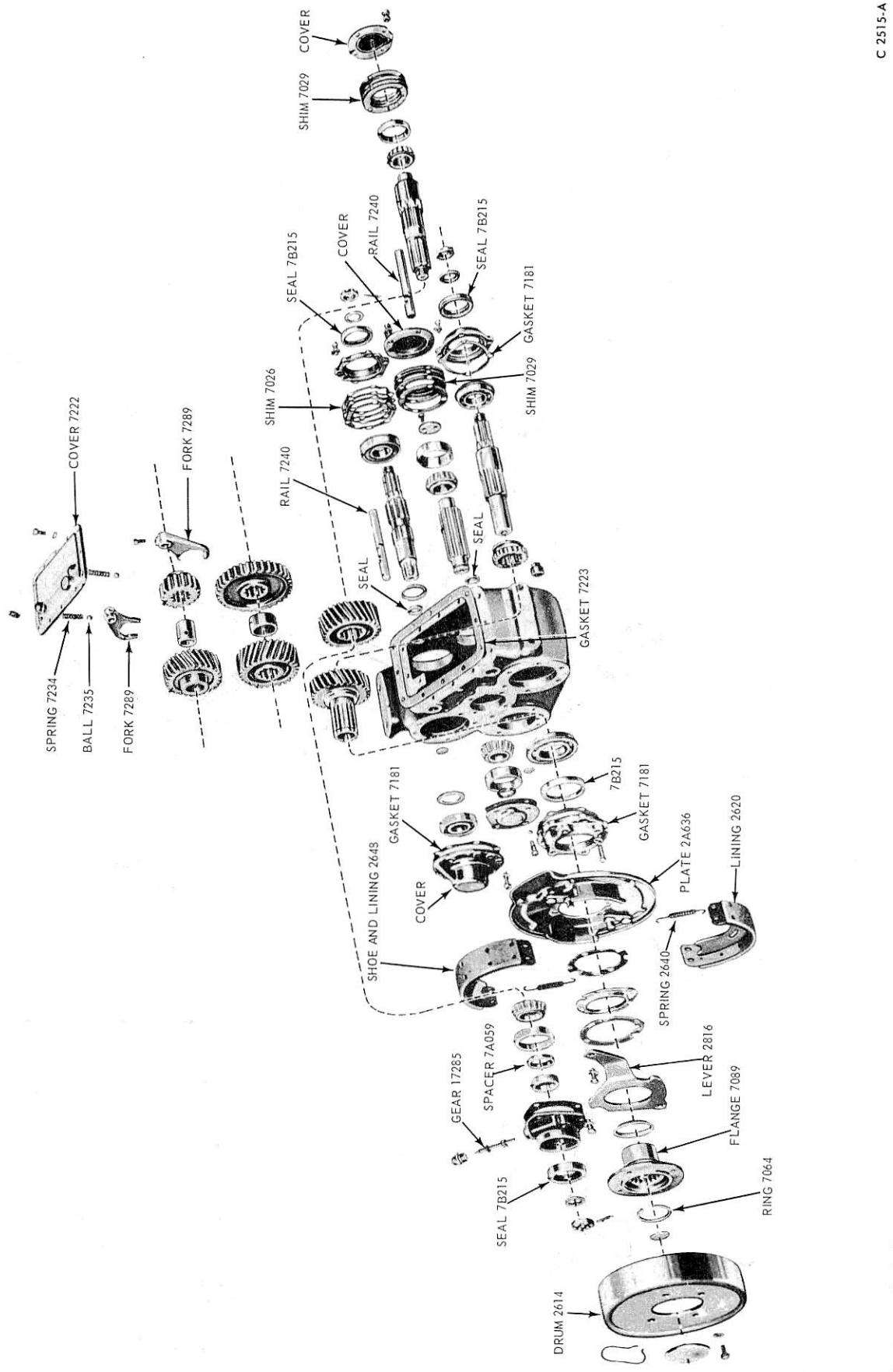

FIG. 3 Exploded View — Rockwell 223 Transfer Case

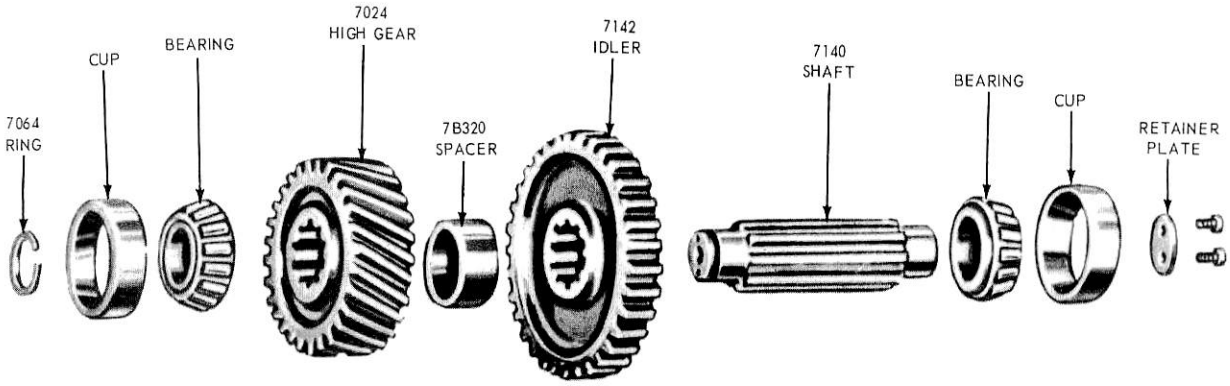

IDLER GEAR ASSEMBLY

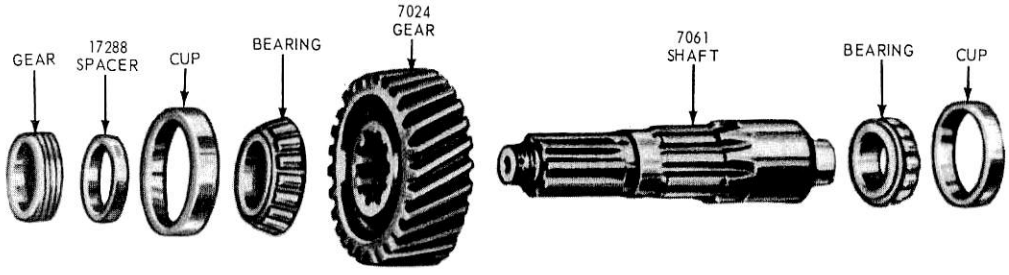

REAR OUTPUT SHAFT ASSEMBLY

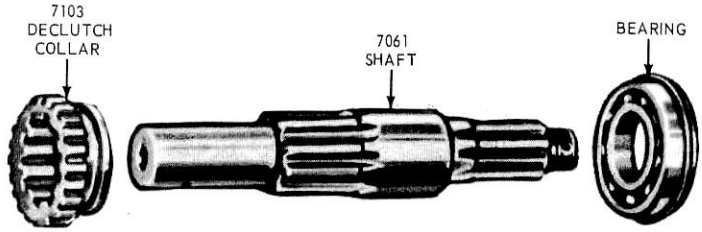

FRONT OUTPUT SHAFT ASSEMBLY

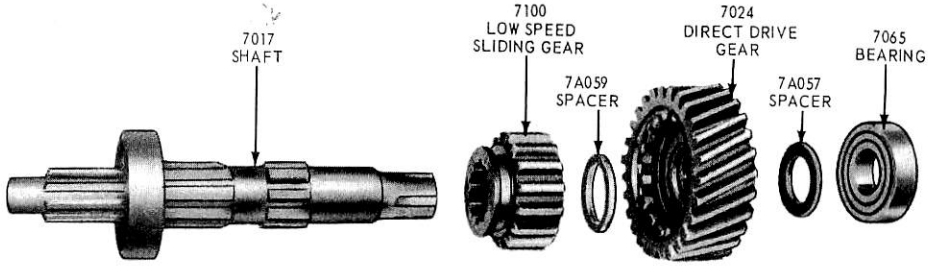

INPUT SHAFT ASSEMBLY

C 2541-A

FIG. 4 Shaft Assemblies — Rockwell 223 Transfer Case

ADJUSTMENTS

TRANSFER CASE

Instructions for adjusting the shift and parking brake linkage are given in Figure 2.

REMOVAL AND INSTALLATION

TRANSFER CASE

Removal

1. Drain the transfer case.
2. Disconnect speedometer cable.
3. Disconnect the output and input shafts and use wire or rope to secure shafts out of the way. **Do not let the shafts hang.**
4. Disconnect parking brake rod at the parking brake bellcrank. Secure rod out of the way.
5. Remove clevis pins and washers and disconnect de-clutch and shift control rods from the shift rails. Secure rods out of the way.
6. Using a transmission jack, support the transfer case while removing the case to support bracket bolts (Fig. 1).
7. Carefully lower case to the floor and remove from under truck.

Installation

1. Using a transmission jack, raise the transfer case and align the threaded mounting holes with the holes in the mounting brackets.
2. Install and torque the mounting bolts.
3. Connect the parking brake rod at the parking brake bellcrank (Fig. 2). Adjust if necessary (Fig. 2).
4. Connect the de-clutch and shift control rods and install clevis pins, washers and cotter pins. Adjust if necessary (Fig. 2).
5. Connect the output and input shafts.
6. Connect the speedometer cable.
7. Fill the transfer case with the specified lubricant.

DISASSEMBLY AND ASSEMBLY

TRANSFER CASE

Disassembly

1. Clean the exterior of the case before proceeding with disassembly.
2. Remove the three driving yokes from the input and output shafts, using a standard slide-hammer as required.
3. Remove the attaching capscrews and washers and lift off the cover and gasket (Fig. 5).

Shift Components

1. Remove the detent springs and use a magnet to remove the detent balls (Fig. 5).
2. Pull both shift shafts out through the front of the case (Fig. 6). If the shafts cannot be removed in this manner, use a soft metal drift and drive the shafts and expansion plugs out through the rear of the case (Fig. 6).
3. Remove the shift shaft oil seals from the front of case if worn or if they are to be replaced.
4. Lift out the range shift and the de-clutch forks.

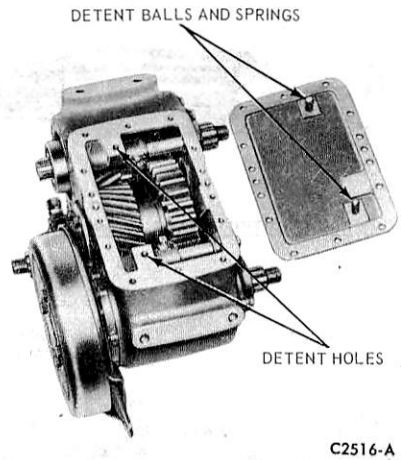

FIG. 5 Removing Cover

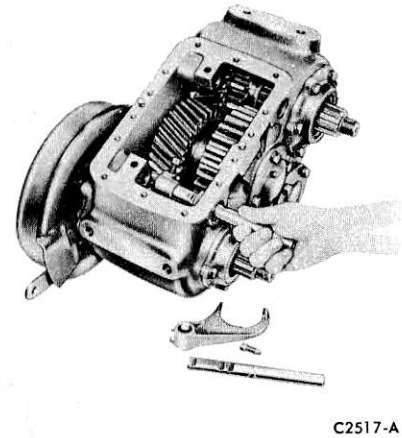

FIG. 6 Removing Shift Shafts

Front Output Shaft

1. Remove the front output shaft bearing cap and gasket (Fig. 7). Pull the shaft and de-clutch collar from the case.
2. Slide a long bar through the front output shaft gear and tap out the small and large expansion plugs located in the brake hub (Fig. 8).

Parking Brake

1. Cut the lock wire and remove the capscrews retaining the brake drum to the brake flange. Remove the drum.
2. Remove the brake hub retaining snap ring (Fig. 9).

3. Using a suitable puller, remove the brake hub from the front output shaft gear (Fig. 10).
4. Unhook the brake shoe return springs and remove the brake shoes and lever (Fig. 11).
5. Remove the mounting bolts and lift off the brake backing plate, washer, deflector and gasket (Fig. 12). **Do not attempt to remove the front output gear at this time. The idler shaft must be removed first, as the gears interfere, otherwise.**

Idler Shaft

1. Remove the idler shaft front and rear bearing caps. Wire the forward bearing cap shims together for re-assembly.
2. Remove the screws and retainer plate from the front end of the idler shaft and then press the shaft out through the rear of the case (Fig. 13).
3. Lift out the low gear, spacer and front bearing (Fig. 14).
4. Remove the high gear. Tap the idler shaft front bearing cup from the case.
5. Remove the snap ring (Fig. 15) and press the bearing from the idler shaft.

Front Output Gear

1. With the idler shaft assembly removed, the front output gear and bearing can now be removed. Remove the front output gear rear bearing cap and gasket.
2. Remove the bearing-retaining snap ring and tap the gear and bearing into the case. Reach through the cover opening and lift out the gear and bearing (Fig. 16).
3. Press the bearing off the shaft.

Rear Output Shaft

1. To remove the rear output shaft, remove the capscrews and lift off the front and rear bearing caps. Wire the shims together for re-assembly.
2. Remove the speedometer drive gear and spacer.
3. Block the rear output gear with a piece of wood as shown in Fig. 17 and press the rear output shaft and front bearing out of the case. The rear output gear and rear bearing can be lifted out of the case through the cover opening.

Input Shaft

1. Remove the input shaft front and rear bearing covers. Wire the shim pack together for re-assembly.
2. Using a block of wood between the sliding gear and the case (Fig. 18), press out the input shaft and front bearing. **Do not pound on the shaft if the gear becomes bound.**
3. Lift out the sliding gear, drive gear and spacer (Fig. 19).
4. Remove front bearing from the input shaft.

ASSEMBLY

Input Shaft

1. Install the input shaft front bearing on the input shaft with the shielded side against the shaft shoulder (Fig. 4).
2. Start the input shaft into the case. Working thru the cover opening, mount the sliding gear, spacer and drive gear (with bushing) on the input shaft.
3. Using a suitable sleeve against the inner race of the front bearing, (Fig. 20) tap the input shaft into position.
4. Position the original shim pack plus an additional 0.010 inch of shims to make sure there is end play in the assembly. Install the front cover and tighten the capscrews to the specified torque (see Specifications of this Part).
5. Place the thrust washer on the shaft and install the rear bearing with the shielded side toward the inside.
6. Position a new gasket and install the bearing cover to the rear of the case. Tighten the capscrews to specifications.
7. Mount a dial indicator with the stem against the front end of the input shaft (Fig. 21) and check the amount of end play in the shaft assembly. **Remove enough shims from under the front bearing cap to arrive at 0.003-0.005 inch end play.** Tighten the retaining capscrews to specifications.

Rear Output Shaft

1. Using a suitable sleeve, press the front bearing onto the rear output shaft (Fig. 22).
2. Hold the rear output gear in position inside the case (Fig. 22) and slide the shaft through it.
3. Install the front bearing cup and the original shim pack plus an additional 0.010 inch of shims. Install the front bearing cover, lock washers and capscrews and torque the cap screws to specifications.
4. Using a suitable sleeve, press the rear bearing onto the rear output shaft (Fig. 23). Tap the bearing cup into position.
5. Install the speedometer drive gear and spacer over the shaft.
6. Position a new gasket, bearing cap and oil seal over the shaft. Install the lock washer and capscrews and torque the capscrews to specifications.
7. Rotate the shaft to seat the bearings. Mount a dial indicator against the rear end of the shaft to check the amount of end play in the assembly (Fig. 24).
8. **Remove sufficient shims from under the front bearing cap to arrive at an adjustment of zero end play and zero preload.**

Front Output Gear

1. **The front output gear must be installed in the case before the idler assembly is installed.**
2. Install the ball bearing on the front output gear hub (Fig. 4).
3. Position the gear and bearing in the case and install the retaining snap ring on the bearing (Fig. 25).
4. Install the rear bearing cap over a new gasket. Install the capscrews and lock washers and torque the capscrews to specifications.

Idler Gear

1. Press the rear bearing on the idler shaft (Fig. 4) and install the snap ring.
2. Hold the high gear in position inside the case and tap the idler shaft through it with a soft hammer (Fig. 26). The short hub side of the gear faces toward the vehicle rear.
3. Install the gear spacer on the idler shaft and then install the low gear with the long hub toward the vehicle front of the case.
4. With the shaft in position, install the rear bearing cup in the case. Use a new gasket and install the rear bearing cap, lock washers and cap screws. Torque the capscrews to specifications.
5. Drive the front bearing onto the idler shaft (Fig. 27). Hold the shaft rigid to avoid damaging the rear bearing and cup. Install the bearing retainer plate and capscrews. Lock wire the capscrews.
6. Tap the front bearing cup into place in the case.
7. Install sufficient extra shims to set up end play in the idler assembly. Install the front bearing cap and secure with lock washers and capscrews. Torque the capscrews to specifications.
8. Mount a dial indicator on the case with the stem set against the inside face of the low gear (Fig. 28). Check the amount of end play by working the assembly back and forth with two prybars as shown in Figure 28. **Remove sufficient shims to get a bearing end play adjustment of 0.003-0.005 inch.**

Front Output Shaft

1. Begin the installation of the front output shaft by installing the ball bearing on the shaft with the bearing snap ring toward the outside (Fig. 4).
2. Install the sliding collar on the shaft. Slide the shaft into the case (Fig. 29).

3. With the shaft in position, install a new gasket, bearing cap and oil seal. Secure in position with lock washers and capscrews. Torque the capscrews to specifications.

Parking Brake

1. Position a new gasket to the case and then mount the brake backing plate, deflector and stamped washer. Insert the capscrews with star washers and tighten to specifications.
2. Position the brake lever on the backing plate.
3. Position the brake shoes on the backing plate with actuating pawl in the web slot.
4. Install brake shoe return springs.
5. Slide the brake hub over the splines of the front output gear. Install the retaining ring.
6. Install the brake drum with lock washers and capscrews. Torque the capscrews to specifications and insert lock wire.
7. Install the expansion plugs. The smaller plug goes in the bore of the front output gear and the larger in the brake hub.

Shift Components

1. Install new shift shaft oil seals in the case, if required.
2. Position the de-clutch fork in the collar.
3. Lubricate the de-clutch shift shaft and slide it into the case and through the shift fork bore.
4. With the shift shaft in position, insert the set screw. Tighten the screw and lock wire to the fork.
5. Position the range shift fork in the sliding gear.
6. Slide the range shift shaft through the bore of the fork. Install the set screw and tighten lock wire to the shift fork.
7. Install the expansion plugs at the rear of the case and flatten to expand.
8. Place the detent balls and springs in position in the case bores.
9. Install the cover with a new gasket and tighten the retaining capscrews to the specified torque.
10. Install the input shaft rear bearing cover, using a new gasket. Tighten the retaining capscrews to specifications.
11. Install the driving yokes and torque the retaining nuts to specifications.

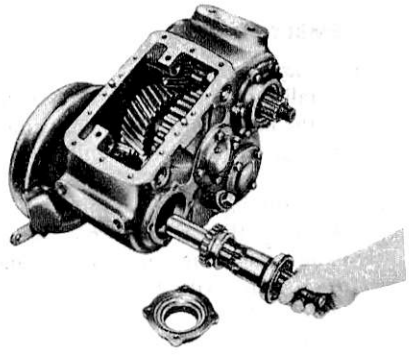

C2518-A

FIG. 7 Removing Front Output Shaft

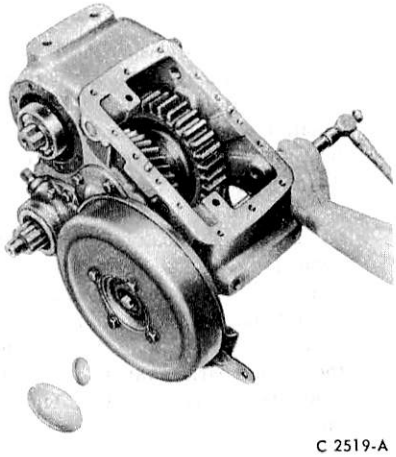

C 2519-A

FIG. 8 Removing Plugs

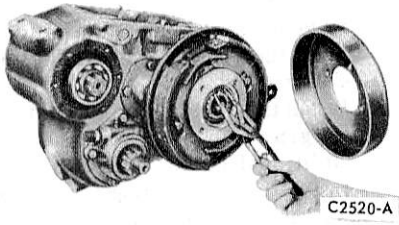

C2520-A

FIG. 9 Removing Snap Ring

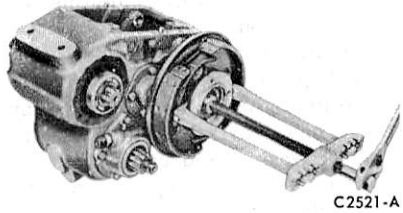

C2521-A

FIG. 10 Removing Hub

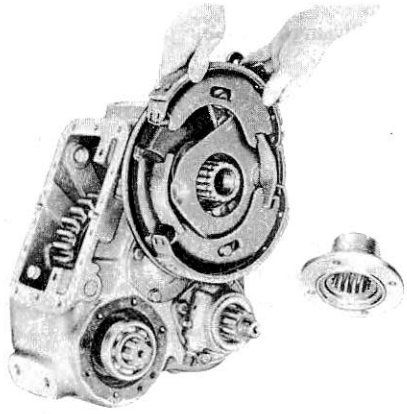

C2522-A

FIG. 11 Removing Brake Shoes

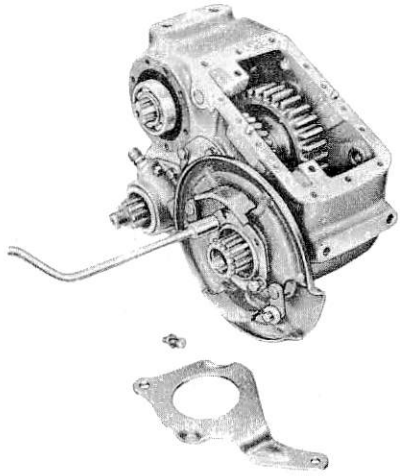

C2523-A

FIG. 12 Removing Brake Backing Plate

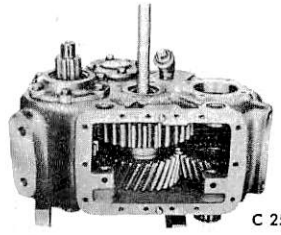

C 2524-A

FIG. 13 Removing Idler Shaft

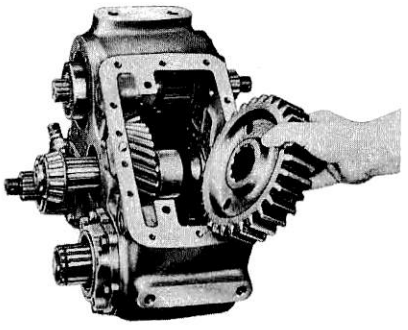

C2525-A

FIG. 14 Removing Low Gear

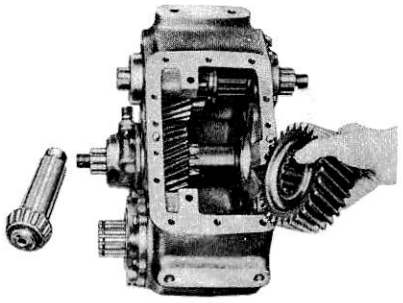

C2526-A

FIG. 15 Removing High Gear

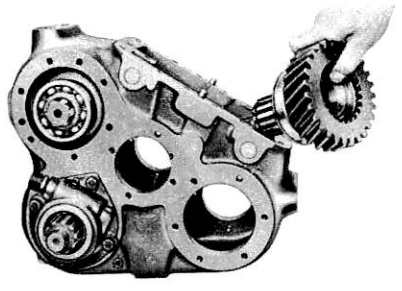

C2527-A

FIG. 16 Removing Front Output Shaft

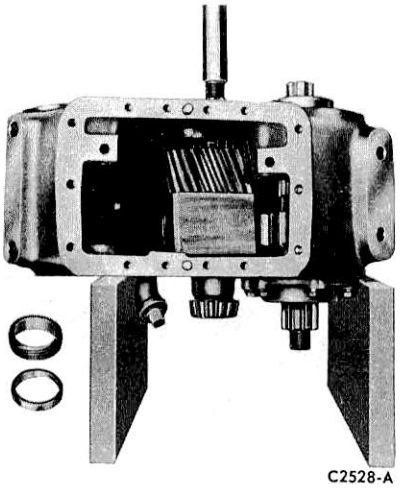

C2528-A

FIG. 17 Removing Rear Output Shaft

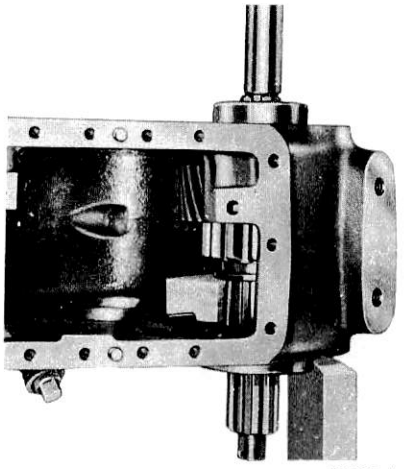

C2529-A

FIG. 18 Removing Input Shaft

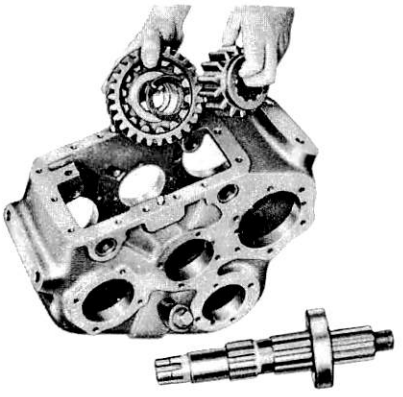

C2530-A

FIG. 19 Removing Sliding Gear, Drive Gear and Spacer

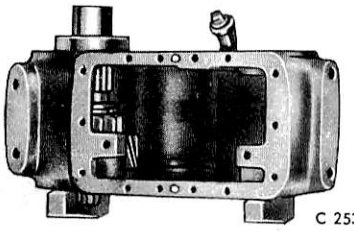

C 2531-A

FIG. 20 Installing Input Shaft

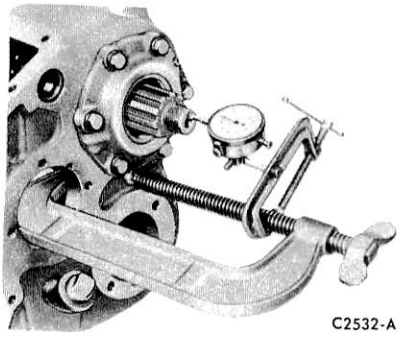

C2532-A

FIG. 21 Checking Input Shaft End Play

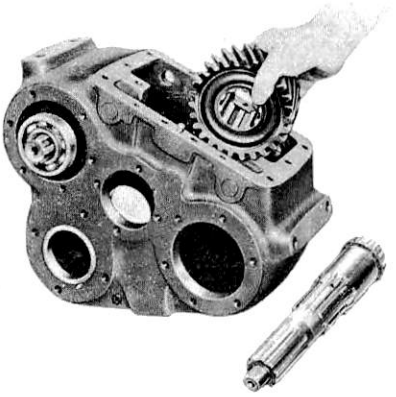

C2533-A

FIG. 22 Installing Rear Output Shaft

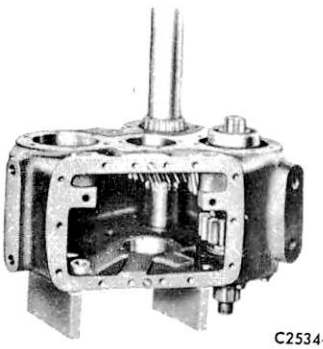

C2534-A

FIG. 23 Installing Rear Output Shaft Bearing

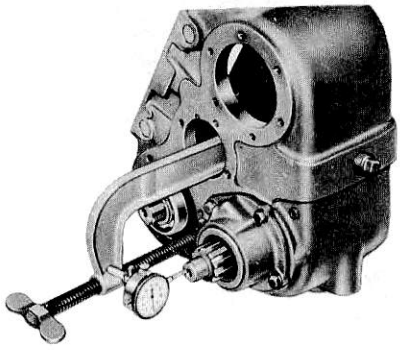

C2535-A

FIG. 24 Checking Rear Output Shaft End Play

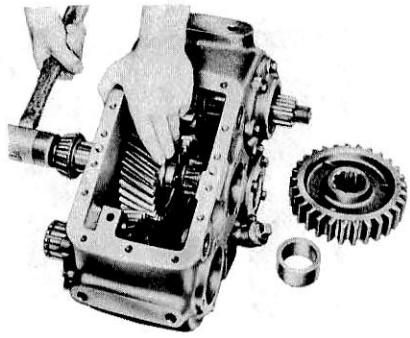

C2537-A

FIG. 26 Installing Idler Shaft

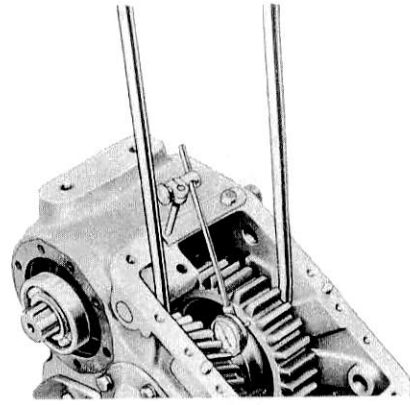

C2539-A

FIG. 28 Checking Idler Shaft End Play

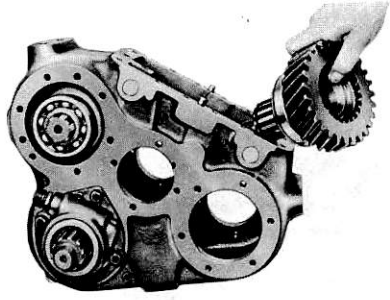

C2527-A

FIG. 25 Installing Front Output Gear

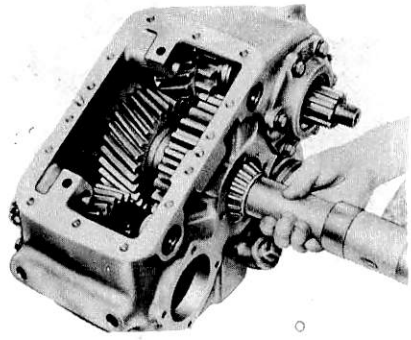

C2538-A

FIG. 27 Installing Idler Shaft Front Bearing

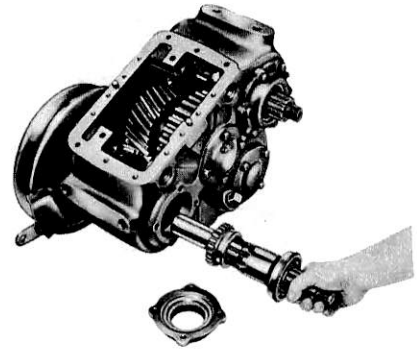

C2518-A

FIG. 29 Installing Front Output Shaft

SPECIFICATIONS

SPEEDOMETER GEAR CHART
ROCKWELL STANDARD T223-C4 TRANSFER CASE - 4 TOOTH DRIVE GEAR

MODEL	RR/AXLE RATIO	TIRE SIZE	REVS./ MILE	DRIVEN GEAR (1.7271)	NUMBER OF TEETH	ADAPTOR (1.78317)
F-600 4 x 4	6.2 (6.14)	7.50 x 20 -8	564	D1TD-BA	14	None
		8.25 x 20 -10	543	D1TD-AA	13	None
		9.00 x 20 -10	523	D1TD-AA	13	None
	6.8 (6.83)	7.50 x 20 -8	564	D1TD-CA	15	None
		8.25 x 20 -10	543	D1TD-CA	15	None
		9.00 x 20 -10	523	D1TD-BA	14	None
	7.2 (7.17)	7.50 x 20 -8	564	D1TD-BA	14	D1TD-AA
		8.25 x 20 -10	543	D1TD-CA	15	None
		9.00 x 20 -10	523	D1TD-CA	15	None

CC1013-A

TORQUE LIMITS – (FT-LBS – OILED THREADS)

Nomenclature	Size	Torque Limits
Bolt - Top Cover to Case	3/8-16	38-49
Bolt - Bearing Caps	3/8-16	38-49
Bolt - Brake Drum to Hub	7/16-14	60-77
Bolt - Brake Mounting Plate	7/16-14	60-77
Nut - Input Shaft Yoke	1-20	300-400
Nut - Output Shaft Yoke	1-20	300-400

CC1014-A

APPROXIMATE LUBRICANT REFILL CAPACITY – PINTS

Rockwell T233-C-4 Transfer Case	US	IMP
SAE 50 Engine Oil (ESE-M2C39-A)	6	5

CC1081-B

PART 16-84 New Process 205 Transfer Case

Applies to F-100 and F-250 4 x 4

COMPONENT INDEX	Page	COMPONENT INDEX	Page
ASSEMBLY OF CASE	84-06	DISASSEMBLY OF SUBASSEMBLIES	
ASSEMBLY OF SUBASSEMBLIES		Idler Shaft	84-10
Idler Shaft and Gear	84-10	Input Shaft	84-08
Input Shaft	84-08	Front Output Shaft	84-09
Front Output Shaft	84-09	Rear Output Shaft	84-08
Rear Output Shaft	84-08	INSTALLATION	84-06
DESCRIPTION	84-01	LINKAGE ADJUSTMENT	84-03
DISASSEMBLY OF CASE	84-06	REMOVAL	84-06

Description

Transfer Case

This manually-shifted unit provides two speed operation by means of a constant-mesh helical gear train. Speeds are changed by using sliding clutch gears. A single shift lever controls the integrated shift linkage system.

Adjustment

Instructions and specifications for linkage adjustment are given in Figures 2, 3 and 4.

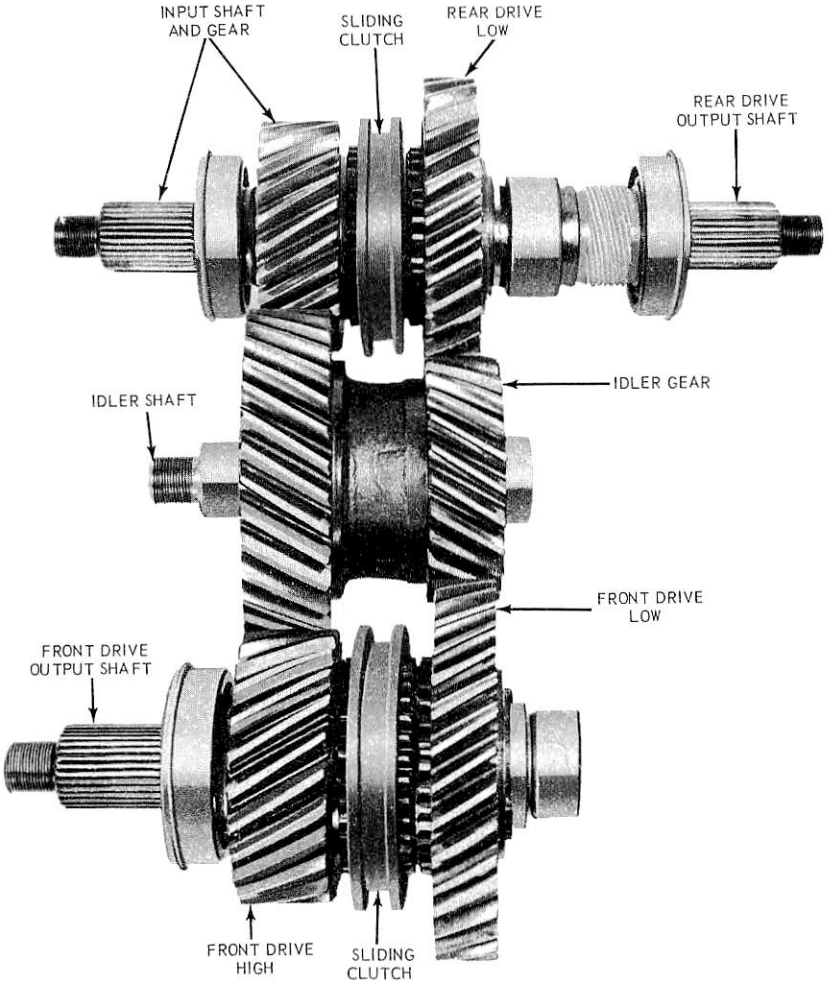

FIG. 1 Gear Train-Model 205 Transfer Case

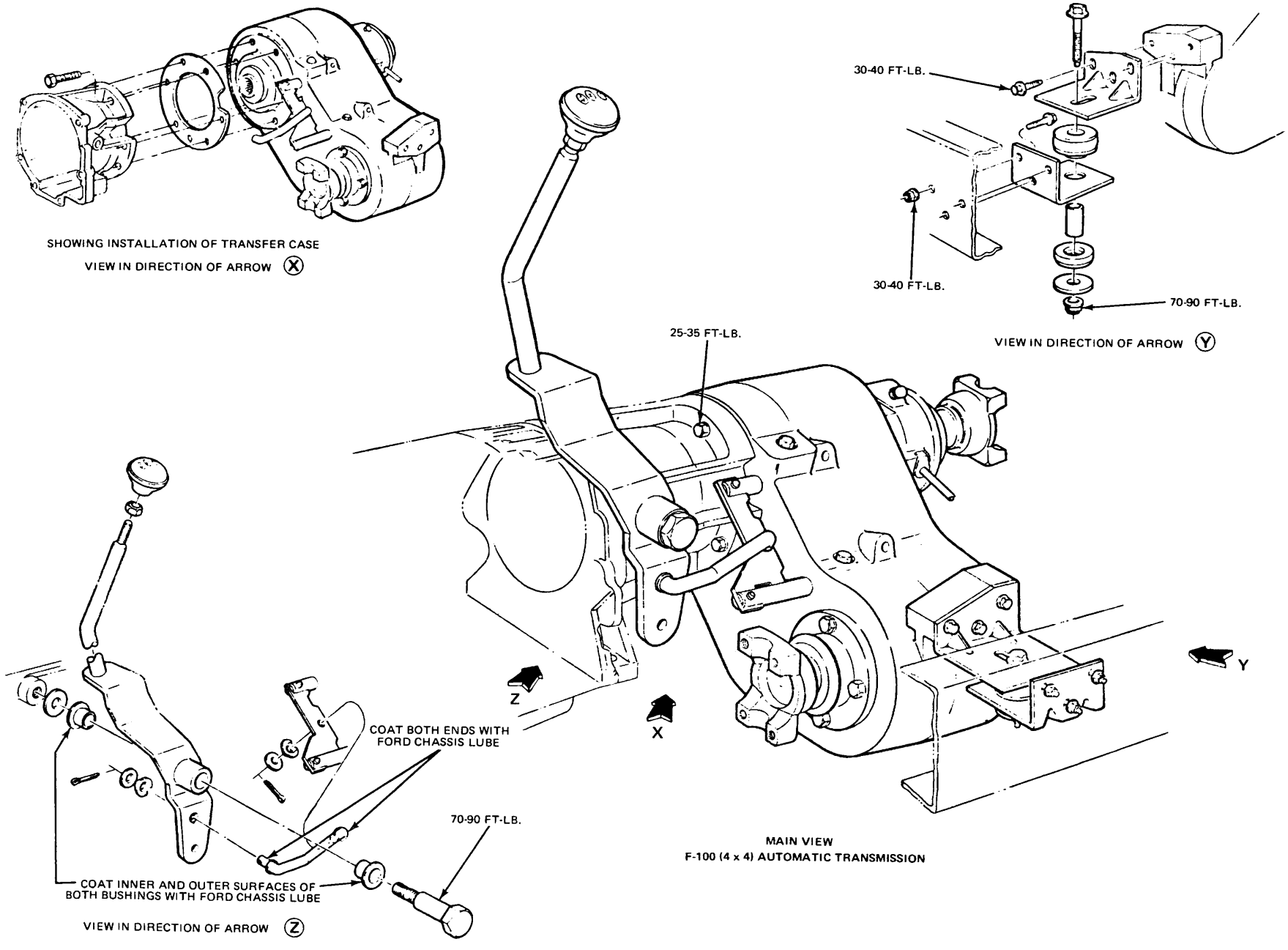

FIG. 2 Model 205 Transfer Case Installation—F-100

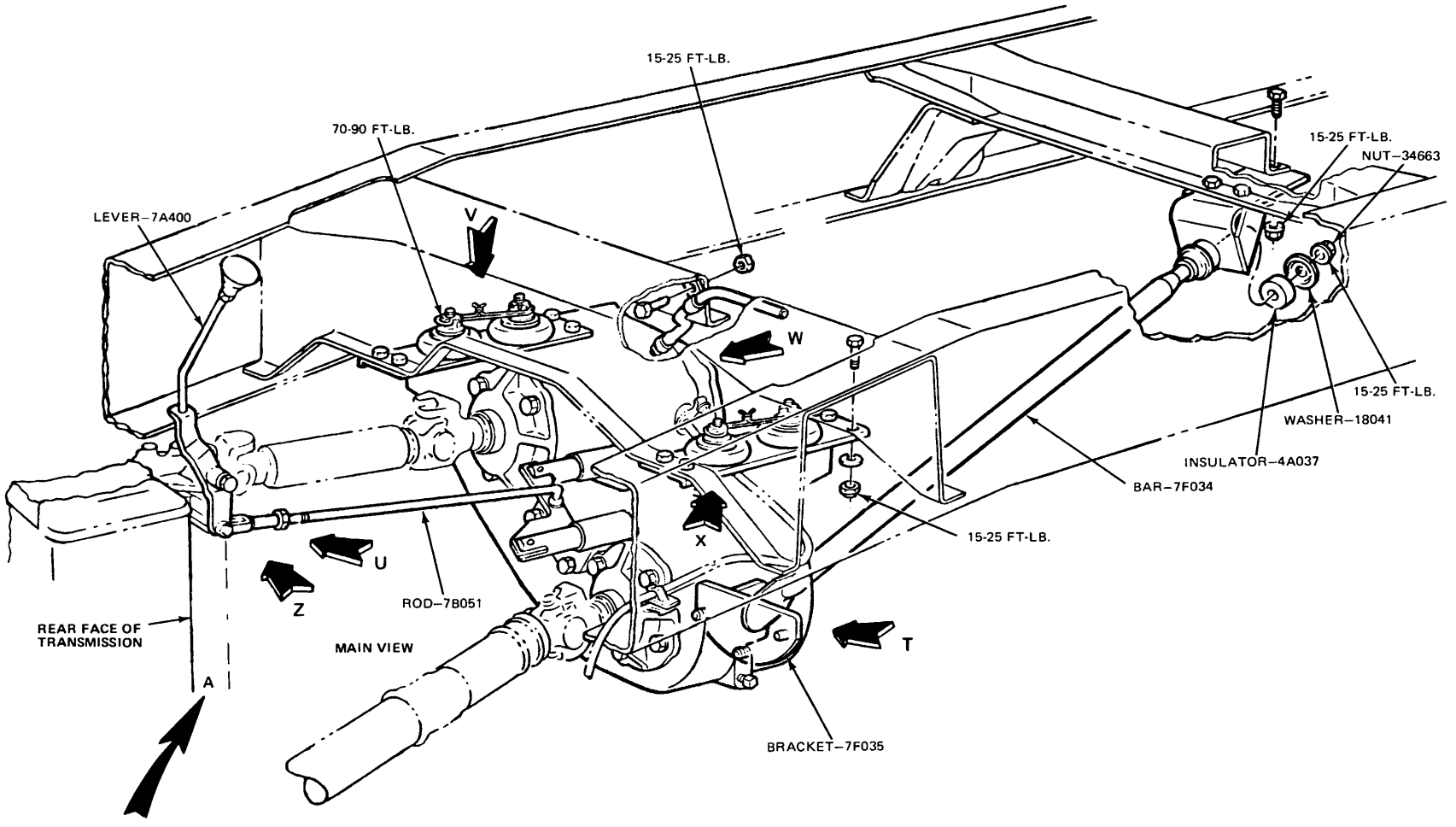

ADJUSTMENT: MODEL 435 MANUAL TRANSMISSION

TRANSFER CASE MUST BE IN 4 WHEEL LOW (CROSS LINK ASSEMBLY ALL THE WAY IN)

DIMENSION "A" MUST BE $\frac{3.94}{3.82}$

ADJUST ROD (7B051) TO CORRECT LENGTH AND TIGHTEN LOCK NUT AT CLEVIS. SEE FIGURE C2711-A FOR AUTOMATIC TRANSMISSION | LINKAGE ADJUSTMENT

DETAILS OF VIEWS T–U–V–W–X–Y–Z ARE SHOWN ON FIGURE C2711-A

C2710-A

FIG. 3 Model 205 Transfer Case Installation—F-250

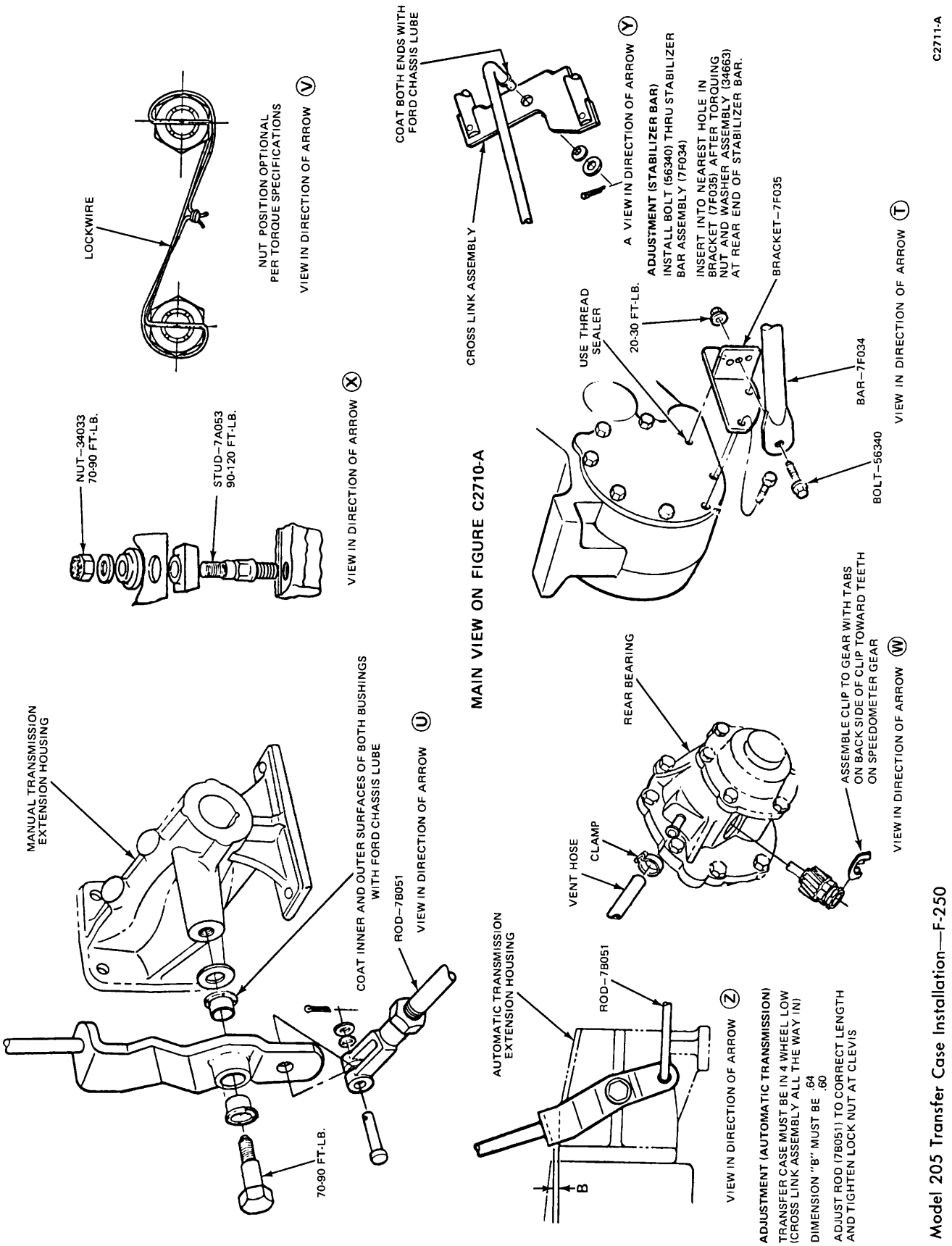

FIG. 4 Model 205 Transfer Case Installation—F-250

REMOVAL AND INSTALLATION

Transfer Case

Removal

1. Drain the transfer case, and disconnect the rear axle drive shaft from the flange at the transfer case (Fig. 2).
2. Disconnect the front wheel drive shaft and the transmission output shaft at the transfer case if on F-250 installation (Fig. 3 and 4). On F-100 installations, disconnect the front wheel drive shaft and remove the bolts attaching the transmission adapter to the transfer case (Fig. 2).
3. Disconnect the shift selector rod and the speedometer cable at the transfer case.
4. Secure the transfer case to a transmission jack, and remove the mounting bolts.
5. Remove the transfer case, and mount it on a floor stand or place on a work bench.

Installation

1. Remove the transfer case from the floor stand or bench and place it on the transmission jack.
2. If necessary to replace a mounting stud on an F-250, see Fig. 3, for correct positioning of the components.
3. Raise the transfer case into position on the mounting bolts. If an F-100 installation, mate the transfer case to the transmission adapter and install and torque the attaching bolts (Fig. 2). Install the mount attaching bolts, nuts and lock washers (Figs. 2, 3 and 4). Torque the bolts and nuts to specification, and remove the jack.
4. Connect the shift selector rod and the speedometer cable.
5. If an F-250 installation, connect the transmission output shaft to the transfer case input shaft. Torque the U-bolt nuts to specification.
6. Connect the front and rear axle drive shafts and torque the universal joint U-bolt nuts to specification.
7. Fill the transfer case to filler plug level with specified lubricant.

DISASSEMBLY AND ASSEMBLY

Transfer Case

Disassembly

1. Clean the exterior of the case.
2. Using a flange-holding tool, loosen the lock nuts and universal joint flanges.
3. Remove the front output shaft rear bearing retainer, (large aluminum plate) front bearing retainer and drive flange (Figs. 5 and 6).
4. Using a soft-faced hammer, tap the shaft assembly from the case (Fig. 7). Remove the sliding clutch, front output high gear, washer and bearing which remain in the case.
5. Remove rear output shaft housing attaching bolts and remove the housing and bearing retainer along with the speedometer gear (Fig. 8).
6. Slide the rear output shaft from the case (do not lose 15 needle bearings).
7. Using a blunt punch, drive the two 1/4 inch shift rail pin access hole plugs into the case.
8. Remove the two shift rail poppet (detent) nuts and springs from the case. Using a magnet, remove the two poppet balls.
9. Position both shift rails in neutral and remove the shift fork retaining roll pins, using a longhandled screw extractor or punch.
10. Remove one shift rail to shift rail link clevis pin.
11. Remove the range shift rail first, then the 4 wheel shift rail (Fig. 9).
12. Remove shift forks and sliding clutch from case.
13. Remove the cup plugs and rail pins (if driven out) from the case.
14. Remove idler gear shaft lock nut.
15. Remove idler gear shaft rear cover.
16. Remove idler gear shaft using Tool J-23429 and a soft-faced hammer.
17. Roll idler gear assembly to front output shaft hole and remove from case (Fig. 10).

Assembly

1. Assemble idler shaft, bearings, spacer and shims to the dummy shaft Tool J-23429. Install the assembly into the case through the front output shaft bore, large end first.
2. Install idler shaft from large bore side and drive into position, using a soft-faced hammer (Fig. 11).
3. Install washer and new lock nut. Check for free idler gear rotation. Torque the lock nut to specifications
4. Position the idler shaft cover so that the flat faces the front output shaft rear bearing retainer (cover). Install a new gasket and the retaining capscrews and torque to specifications.
5. If removed, install interlock pins into the inter-lock bore, working through the front output shaft opening.
6. Start 4 wheel drive shift rail into the case from the front, solid end first, with detent notches up.
7. Position shift fork onto the shift rail with the long end facing inward. Push the rail through the fork and into neutral position.
8. Position input shaft and bearing into case (Fig. 13).
9. Start engine shift rail into case from front, with detent notches up.
10. Position sliding clutch to fork. Position the sliding clutch on the input shaft and align fork with shift rail. Push rail through fork into neutral position.
11. Using a long punch, install the roll pins locking the shift forks to the shift rails.
12. Position front wheel high gear and thrust washer in case. (Fig. 14). Position the sliding clutch in the shift fork. Shift rail and fork into the front wheel drive (4 -Hi) position while meshing the internal teeth of the sliding clutch with the mating teeth on the front wheel high gear.

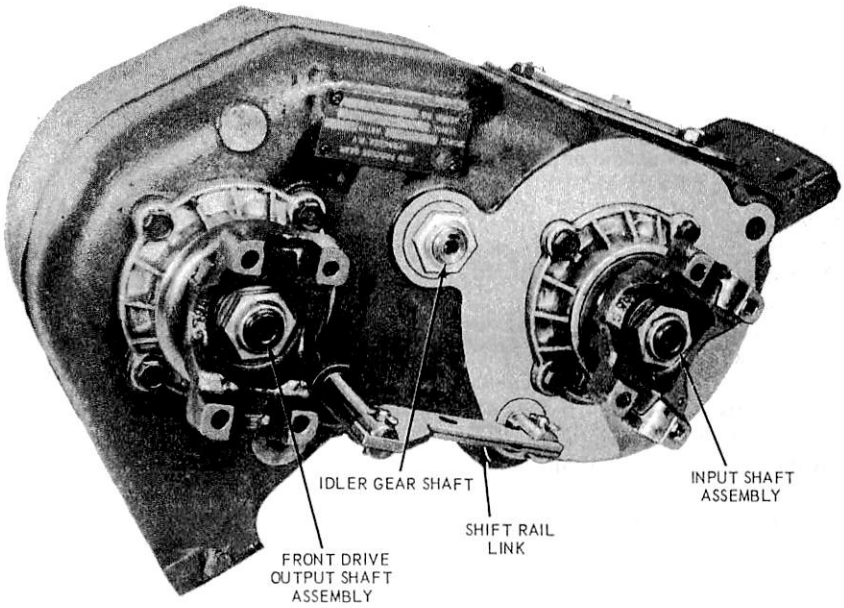

FIG. 5 Model 205 Transfer Case-Front View

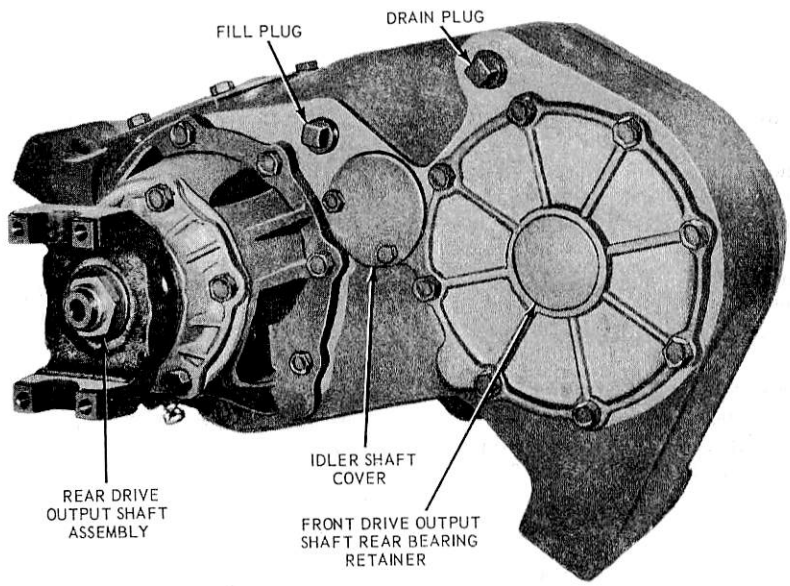

FIG. 6 Model 205 Transfer Case-Rear View

13. Line up thrust washer, high gear and sliding clutch with bearing bore in case and insert front output shaft and low gear into the high gear assembly (Fig. 14).
14. Install a new seal in front output shaft front bearing retainer (Fig. 12) and install bearing and retainer and new gasket in case. Torque the cap screws to specifications.
15. Lubricate the roller bearing in the front output shaft rear bearing retainer (aluminum cover) and position to shaft and case, using two new gaskets. Apply thread sealer to the attaching cap screws, install and torque to specifications.
16. Position range shift rail in High and install rear output shaft and retainer assembly to housing and input shaft, (Fig. 8), using one or two new gaskets as required for clearance on the input shaft pilot.
17. Install and torque rear output shaft housing bolts to specifications.
18. Install shift rail pin access plugs using a punch and sealing compound.

19. Install drain and fill plugs and torque to specifications.
20. Install cross-link clevis pin.

Sub-Assemblies

REAR OUTPUT SHAFT

Disassembly (Fig. 13)

1. Remove snap ring from the rear output shaft and slide off the thrust washer. Remove the washer-positioning pin.
2. Remove tanged thrust washer from shaft and slide off the low speed gear, making provision to catch the two rows of needle bearings (32 per row) and spacer.
3. Remove remaining tanged thrust washer.
4. Using a hooked tool, remove the retainer ring, washer, needle bearings and spacer from the pilot bore of the rear outut shaft.
5. Remove rear bearing retainer and ball bearing from the rear output shaft bearing housing.
6. Remove the caged roller bearing from the housing only if replacing.

Assembly (Fig. 13)

1. Install new bearing retainer oil seal into the bearing retainer.
2. Install a new caged roller bearing into the bearing housing, if required.
3. Install the roller bearings, spacer, washer and retainer ring in the pilot bore of the rear output shaft, using low melting point petrolatum.
4. Install tanged thrustwasher onto output shaft with the tang indexing in the groove in the clutch teeth.
5. Position the output shaft low gear on the output shaft and using the shaft and petrolatum as assembly aids, insert the two rows of roller bearings and the spacer into the gear.
6. Install the second tanged thrust washer on the output shaft with the tang facing away from the gear.
7. Install washer positioning pin and thick thrust washer on the shaft. Rotate the thick washer until the tang on the thin washer (step 6) fits into slot about 90° away from the positioning pin.

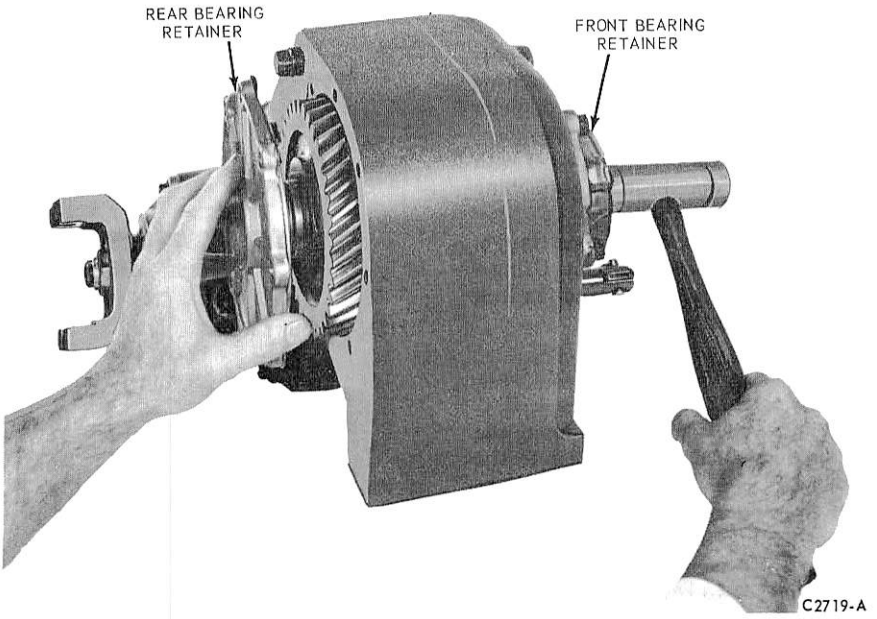

FIG. 7 Removing Front Output Shaft

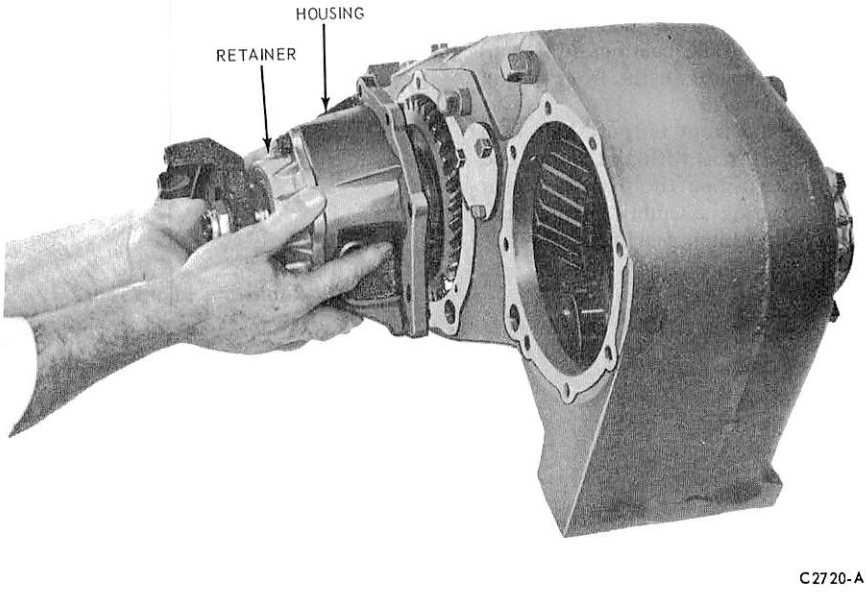

FIG. 8 Removing or Installing Rear Output Shaft

8. Install retaining snap ring.
9. Check end play between the snap ring and the thick thrust washer. It should be 0.002 -0.027 inch.
10. Position the rear output shaft assembly in the output shaft bearing housing and install the speedometer gear and rear ball bearing.
11. Install the rear bearing retainer with new gasket and torque the attaching cap screws to specifications.
12. Install the output drive flange, washer and a new lock nut. Using a flange holding tool, torque the lock nut to specifications.

FRONT OUTPUT SHAFT (FIG. 14)

Disassembly

1. Remove the snap ring retaining the thrust washer and low gear to the shaft.
2. Remove the thick thrust washer and positioning pin.
3. Make provision to catch the roller bearings (two rows of 32 each) and slide the gear off the shaft along with the roller bearing spacer.
4. If necessary to replace the roller bearing in the rear bearing retainer, (aluminum cover) replace the entire assembly.

Assembly

1. Using petrolatum, install the two rows of needle bearings (32 each) and the spacer in the front output shaft low gear.
2. Place the front output shaft in a softfaced vise with the spline end down. Position the front low gear and bearing assembly on the shaft with the clutch gear facing down.

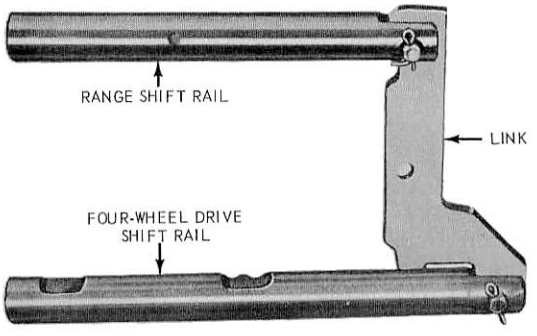

FIG. 9 Shift Rails

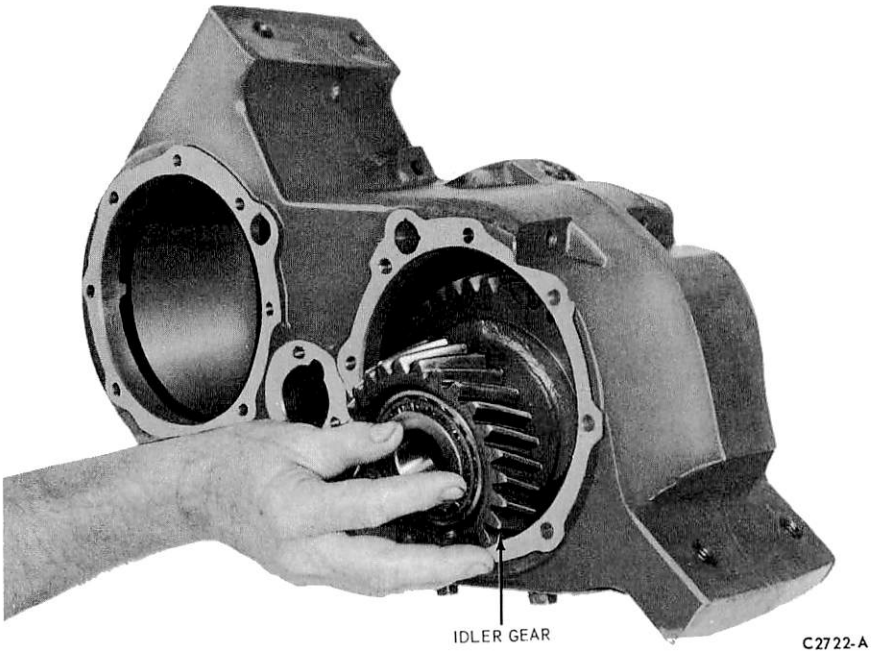

FIG. 10 Removing Idler Gear

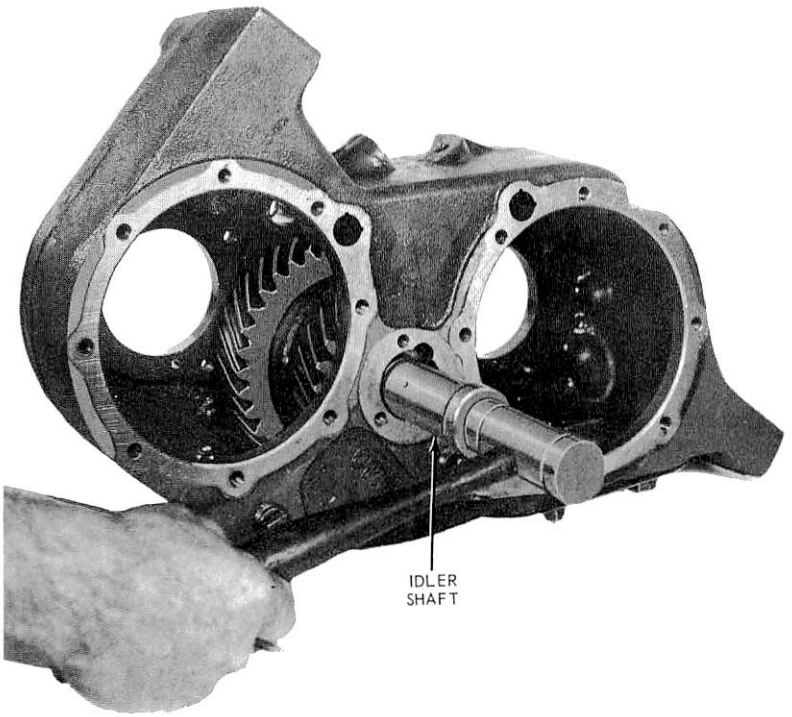

C2724-A

FIG. 11 Installing Idler Gear

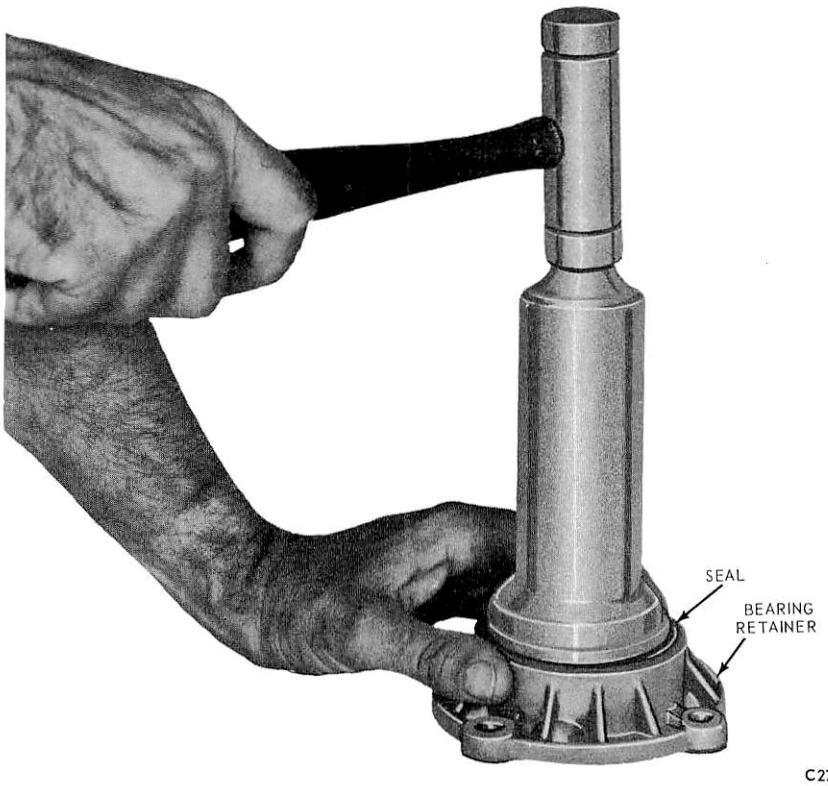

C2725-A

FIG. 12 Installing Seal

bearing assembly on the shaft with thee clutch gear facing down.

3. Install thrust washer positioning pin, thrust washer and a new snap ring. Position the snap ring so that the opening is opposite the pin.

IDLER GEAR

Disassembly (Fig. 15)

1. If necessary to replace bearings, drive out the bearing cups using the drive slot provided in the gear bore.

Assembly

Checking End Play-Press Method

1. Press in new bearing cups if removed.
2. Assemble the idler gear, bearings, spacer and shims using the dummy shaft, Tool No. J-23429 or equivalent.
3. Place the assembly in a press and using a piece of pipe that will clear the dummy shaft, apply enough pressure to the bearing cones to remove looseness between the bearing spacer and shims (Fig. 16.) Using a dial indicator check the end play between the bearing cones and cups. Tolerance should be 0 to 0.002 inch. Adjust this tolerance by adding or subtracting shims between the bearings and the bearing spacer.

Checking End Play (Vise Method)

1. Assemble the idler shaft, bearings spacer and shims on the idler shaft.
2. Clamp the large end of the shaft in a vise (Fig. 17).
3. Using a suitable sleeve or short piece of pipe, assemble the locknut and washer on the shaft as shown (Fig. 17) and torque the locknut to installation Specification.
4. Using a dial indicator, check the end play between the bearing cones and cups. Tolerance should be 0 to 0.002 inch. Adjust this tolerance by adding or subtracting shims between the bearings and the bearing spacer.

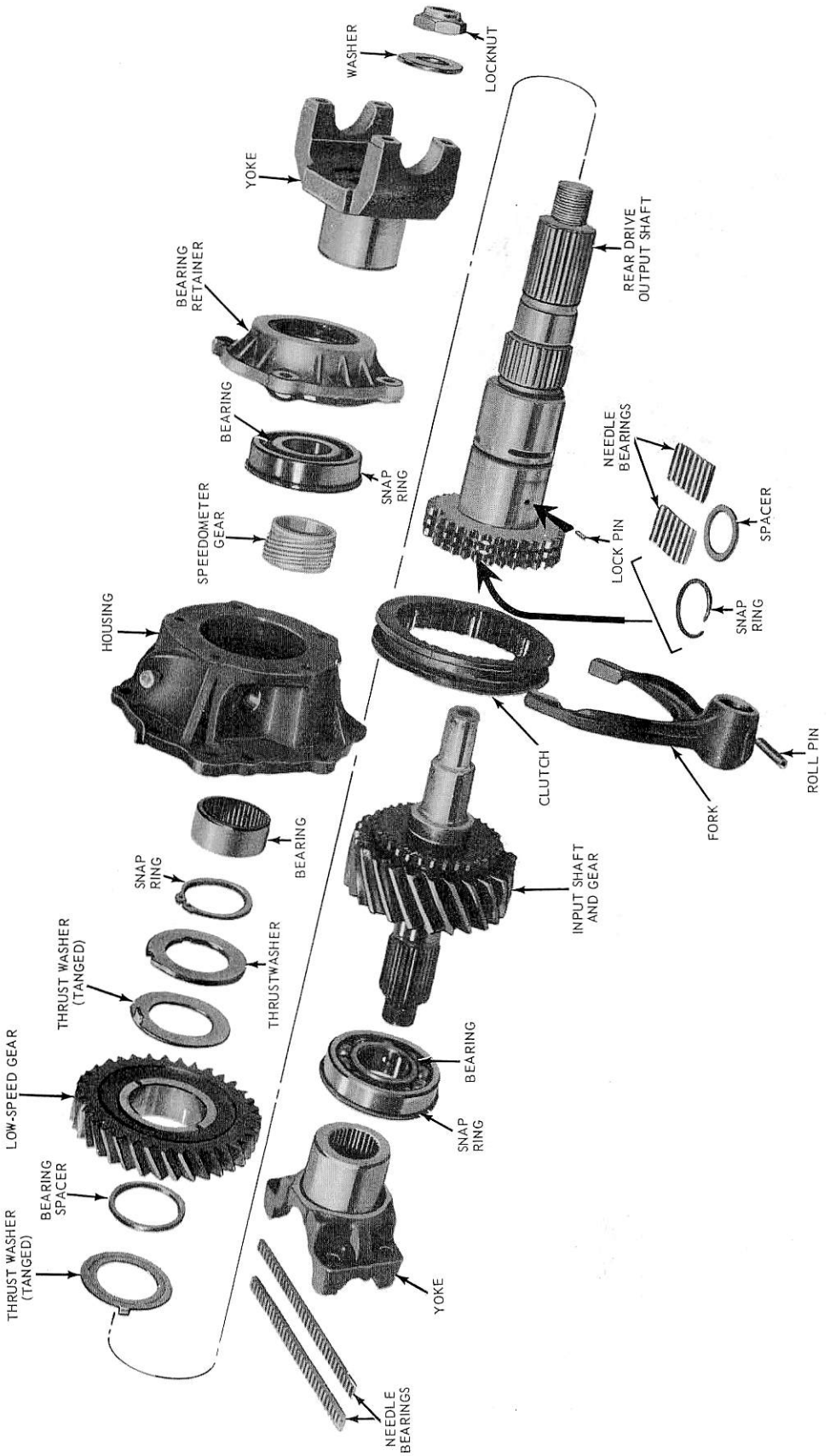

FIG. 13 Disassembled View-Input and Rear Output Shafts

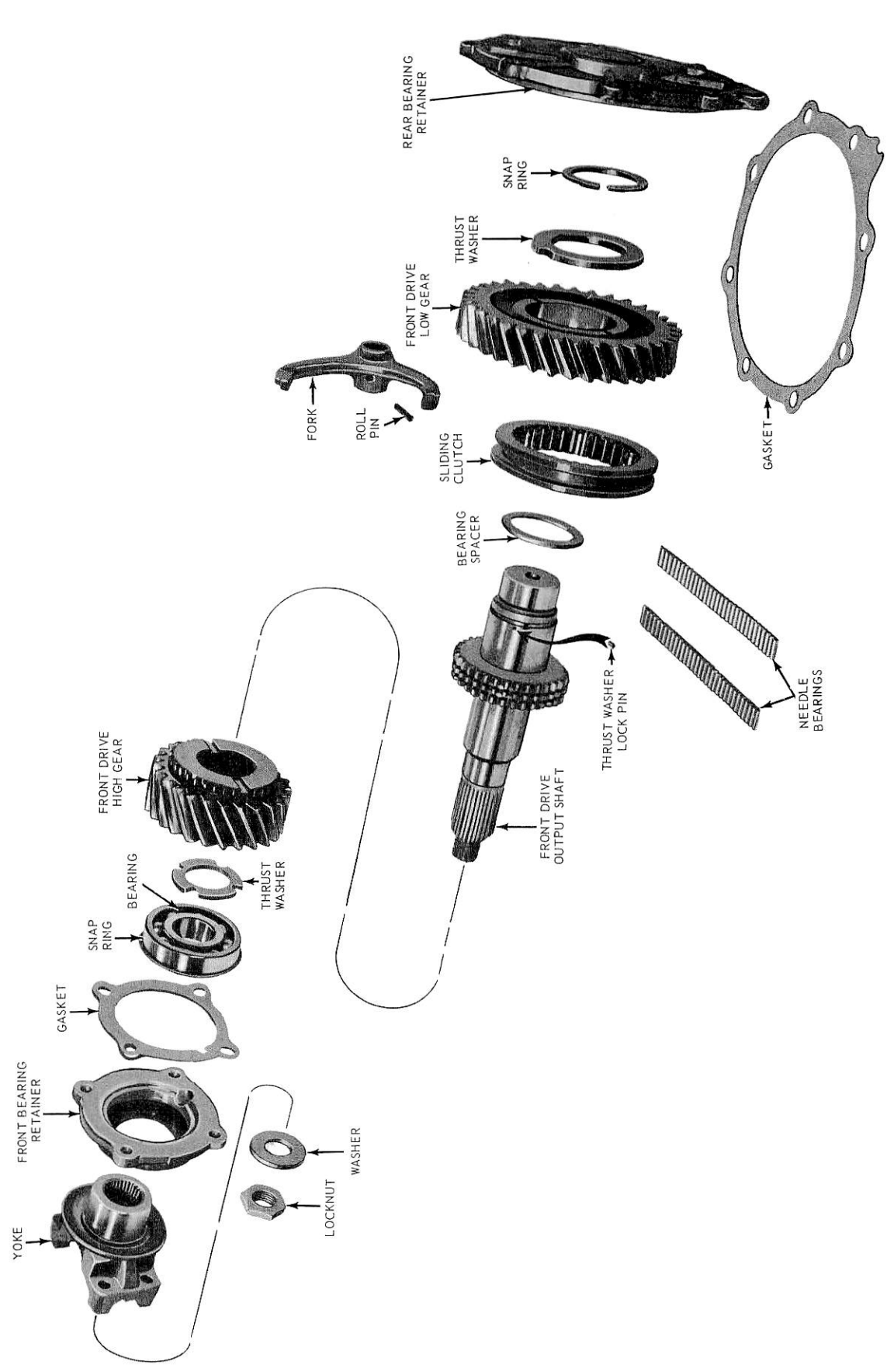

FIG. 14 Disassembled View-Front Output Shaft

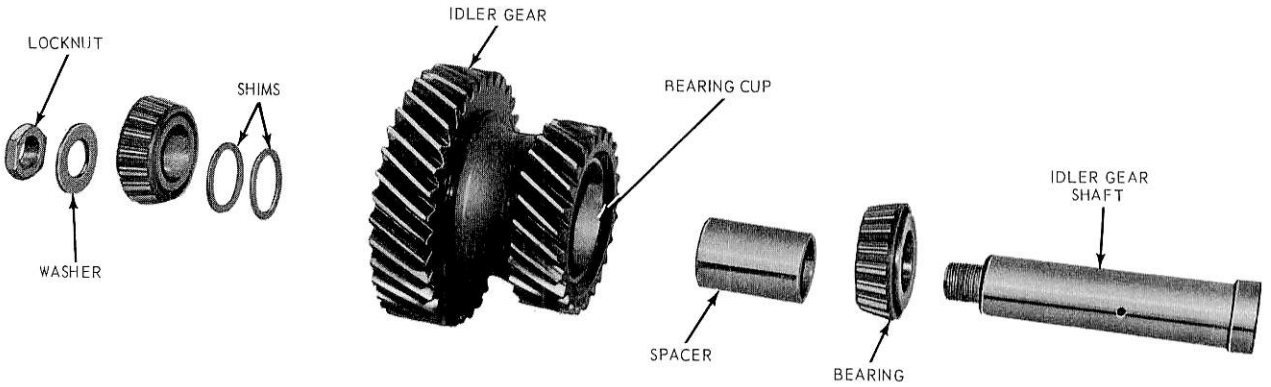

FIG. 15 Disassembled View-Idler Gear

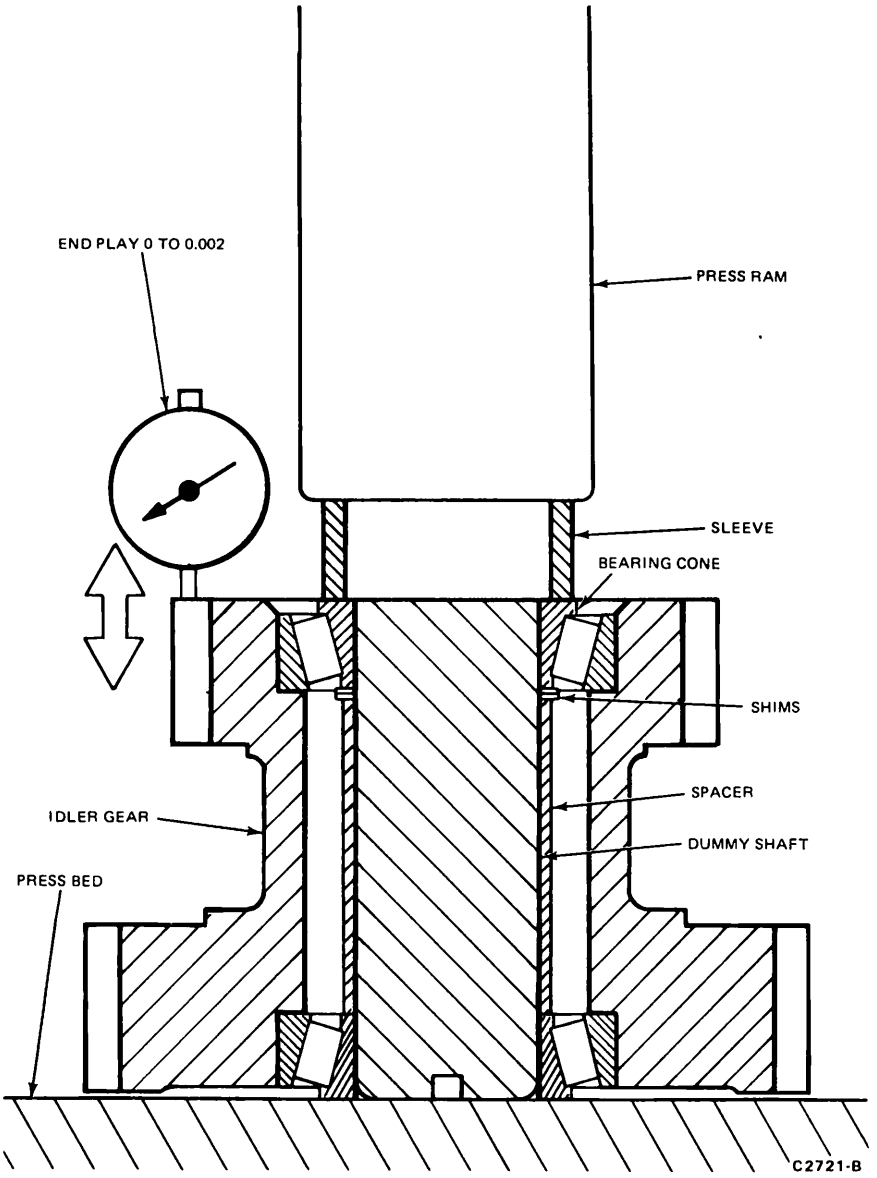

FIG. 16 Checking Idler Gear End Play Using Dummy Shaft

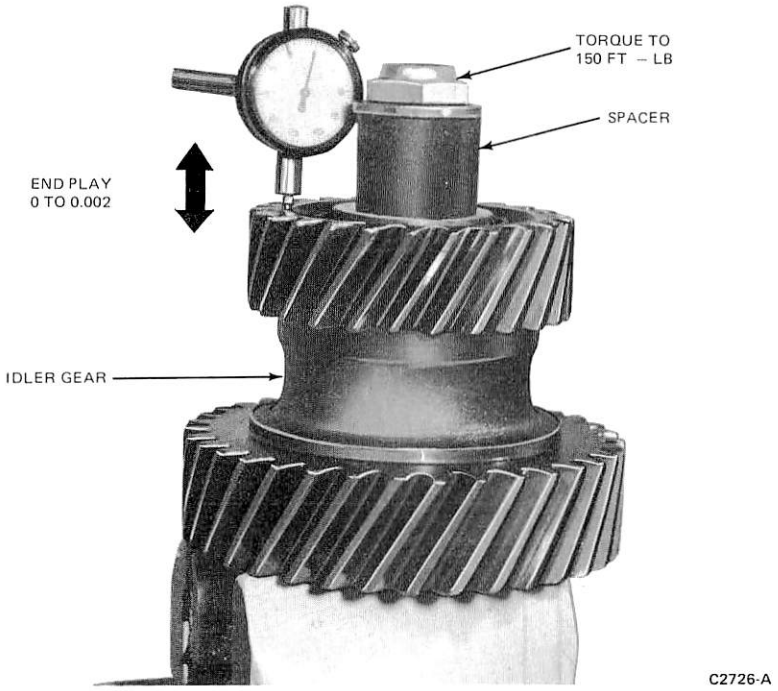

FIG. 17 Checking Idler Gear End Play using Idler Shaft and Sleeve

SPECIFICATIONS

APPROXIMATE LUBRICANT REFILL CAPACITY – PINTS

Transfer Case – New Process	US	IMP
SAE 50 Engine Oil (ESE-M2C39-A)	4	3.5

SPECIAL TOOLS – NEW PROCESS TRANSFER CASE

Tool No.	Description
Tool 4625-AB	Bearing Retainer Seal Installer
J-23429	Dummy Shaft (Idler Gear)
OTC-630-15	Idler Gear Bearing Cup Installer
Manzel 77288	Shift Rail Seal Installer

TORQUE LIMITS – NEW PROCESS TRANSFER CASE

Description	Ft-Lbs
Bearing Retainer Bolts – Front Output Shaft – Front	30-35
Bearing Retainer Bolts – Rear Output Shaft	30-35
Bearing Retainer Bolts – Input Shaft	30-35
Bearing Retainer Bolts – Front Output Shaft – Rear	30-35
Drain and Filler Plugs	30
Extension Housing to Case Bolts	30-35
Idler Shaft Cover Bolts	20
Idler Shaft Locknut	150
Poppet Ball Retainer	15-16
P.T.O. Cover Bolts	12-18
Yoke (Companion Flange) Locknut	130-150

CC1165-A

Automatic Transmission

GROUP 17

PART 17-01 PAGE

General Automatic Transmission Service 17-01-01

PART 17-02

Shift Control Linkage 17-02-01

PART 17-05

C4 Automatic Transmission 17-05-01

PART 17-10 PAGE

C6 Automatic Transmission 17-10-01

PART 17-15

FMX Automatic Transmission 17-15-01

PART 17-27

AT-540 Automatic Transmission 17-27-01

PART 17-30

MT-Series Automatic Transmission 17-30-01

RATING PLATE

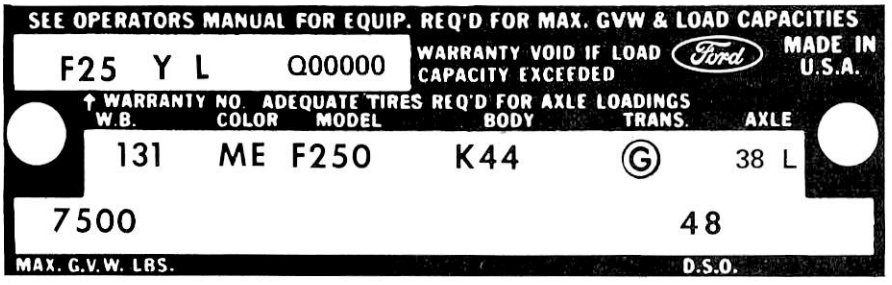

MFD. BY FORD MOTOR CO. IN U.S.A.
DATE: 09/72 GVWR 7500
GAWR: FRONT 3000 REAR 4500
THIS VEHICLE CONFORMS TO ALL APPLICABLE FEDERAL MOTOR VEHICLE SAFETY STANDARDS IN EFFECT ON THE DATE OF MANUFACTURE SHOWN ABOVE

F254LQ00000 TRUCK
VEH. IDENT. NO | TYPE

BODY	COLOR	TRIM	TRANS	AXLE	DSO
K44	ME	4B	G	38	48

VEHICLE CERTIFICATION LABEL

GAS CODE	DIESEL CODE	TRANSMISSION
G	–	Automatic (C4)
J	–	Automatic (FMX)
P	–	Automatic (C6)
L	L	Automatic (AT-540)
Z	Z	Transmatic (MT-40)
–	Y	Transmatic (MT-41)
I	–	Transmatic (MT-42)

D 2170 - D

FIG. 1 Typical Vehicle Certification Label—Transmission Identification

PART 17-01 General Automatic Transmission Service

COMPONENT INDEX Applies to Models as Indicated	All Models	Bronco	Econoline	P-350-400-500	F-100	F-250	F-350	B-600-700	F-600
AIR PRESSURE CHECKS	01-08								
ANTI-STALL DASHPOT CLEARANCE CHECK (Engine Compartment)	01-06								
CASE (Transmission Inspection)	01-14								
CONTROL PRESSURE CHECK	01-06								
CONTROL VALVE BODY Cleaning and Inspection	01-10								
CONVERTER Checking	01-06								
Cleaning	01-12								
DISTRIBUTOR SLEEVE (FMX) Inspection		N/A	N/A	01-13	N/A	N/A	01-13	N/A	N/A
DRAIN AND REFILL (Transmission)	01-09								
ENGINE IDLE SPEED CHECK	01-06								
EXTENSION HOUSING INSPECTION	01-10								
FLUID AERATION CHECK	01-05								
FLUID LEAKAGE CHECK	01-05								
FLUID LEVEL CHECK	01-04								
FORWARD CLUTCH INSPECTION C4 Transmission	01-11	01-11	01-11	N/A	01-11	01-11	N/A	01-11	N/A
C6 Transmission		N/A	N/A	N/A	01-11	01-11	01-11	N/A	N/A
FRONT CLUTCH (FMX) Inspection	N/A	N/A	N/A	01-11	N/A	N/A	01-11	N/A	N/A
FRONT PUMP Inspection	01-11								
FRONT SERVO (FMX) Inspection		N/A	N/A	01-10	N/A	N/A	01-10	N/A	N/A
GOVERNOR INSPECTION	01-10								
HYDRAULIC SYSTEM BENCH TESTS (FMX) Pressure Tests		N/A	N/A	01-08	N/A	N/A	01-08	N/A	N/A
Testing Tool Installation		N/A	N/A	01-08	N/A	N/A	01-08	N/A	N/A

A page number indicates that the item is for the vehicle(s) listed at the head of the column.
N/A indicates that the item is not applicable to the vehicle(s) listed.

COMPONENT INDEX Applies to Models as Indicated	All Models	Bronco	Econoline	P-350-400-500	F-100	F-250	F-350	B-600-700	F-600
INTERMEDIATE SERVO INSPECTION									
C4 Transmission		01-10	01-10	N/A	01-10	01-10	N/A	N/A	N/A
C6 Transmission		N/A	N/A	N/A	01-10	01-10	01-10	01-10	01-10
LOW-REVERSE SERVO INSPECTION									
C4 Transmission		01-10	01-10	N/A	01-10	01-10	N/A	N/A	N/A
MANUAL LINKAGE CHECKS	01-04								
OIL COOLER CLEANING	01-12								
OIL COOLER TUBES									
Removal and Installation	01-09								
ONE-WAY CLUTCH									
Inspection	01-12								
OUTPUT SHAFT (FMX)									
Inspection		N/A	N/A	01-13	N/A	N/A	01-13	N/A	N/A
PINION CARRIERS INSPECTION									
C4 Transmission		01-13	01-13	N/A	01-13	01-13	N/A	N/A	N/A
C6 Transmission		N/A	N/A	N/A	01-13	01-13	01-13	01-13	01-13
PLANET CARRIER AND CENTER SUPPORT (FMX)									
Inspection		N/A	N/A	01-13	N/A	N/A	01-13	N/A	N/A
PRESSURE REGULATOR (FMX)									
Inspection		N/A	N/A	01-10	N/A	N/A	01-10	N/A	N/A
PRIMARY SUN GEAR SHAFT (FMX)									
Inspection		N/A	N/A	01-12	N/A	N/A	01-12	N/A	N/A
REAR CLUTCH (FMX)									
Inspection		N/A	N/A	01-11	N/A	N/A	01-11	N/A	N/A
REAR PUMP (FMX)									
Inspection		N/A	N/A	01-11	N/A	N/A	01-11	N/A	N/A
REAR SERVO (FMX)									
Inspection		N/A	N/A	01-10	N/A	N/A	01-10	N/A	N/A
REVERSE-HIGH CLUTCH INSPECTION									
C4 Transmission		01-11	01-11	N/A	01-11	01-11	N/A	N/A	N/A
C6 Transmission		N/A	N/A	N/A	01-11	01-11	01-11	01-11	01-11

A page number indicates that the item is for the vehicle(s) listed at the head of the column.
N/A indicates that the item is not applicable to the vehicle(s) listed.

COMPONENT INDEX Applies to Models as Indicated	All Models	Bronco	Econoline	P-350-400-500	F-100	F-250	F-350	B-600-700	F-600
SHIFT POINT CHECKS	01-07								
SPECIFICATIONS									
STALL TEST	01-07								
STATOR ONE-WAY CLUTCH CHECK	01-12								
STATOR TO IMPELLOR INTERFERENCE CHECK	01-12								
STATOR SUPPORT Inspection	01-14								
STATOR TO TURBINE INTERFERENCE CHECK	01-13								
TRANSMISSION CLEANING	01-10								
TURBINE AND STATOR END PLAY CHECK	01-12								
VACUUM DIAPHRAGM	01-15								
Checking	01-07								
Removal and Installation	01-09								

A page number indicates that the item is for the vehicle(s) listed at the head of the column.
N/A indicates that the item is not applicable to the vehicle(s) listed.

TESTING

When diagnosing transmission problems, refer to the truck Diagnosis Manual for the detailed information on the items that could be causing the problem.

The following preliminary checks should be made before proceeding with other diagnosis checks.

MANUAL LINKAGE CHECKS

Correct manual linkage adjustment is necessary to position the manual valve for proper fluid pressure direction to the different transmission components. Improperly adjusted manual linkage may cause cross-leakage and subsequent transmission failure. Refer to Linkage Adjustments in Part 17-02 for detailed manual linkage adjustment procedures.

TRANSMISSION FLUID LEVEL CHECK

The automatic transmission is designed to operate with the oil level between the add and full mark on the dipstick at an operating temperature of 150 degrees F to 170 degrees F, and should be checked under these conditions. The operating temperature may be obtained by driving 15 to 20 miles of city type driving with the outside temperature above 50 degrees F. If the transmission is not at an operating temperature of 150 degrees F to 170 degrees F and it becomes necessary to check the fluid level, the transmission may be checked at 70 degrees to 95 degrees F. Check the fluid level as follows:

Transmission at Operating Temperature (150 Degrees F to 170 Degrees F)

1. With transmission in Park P position, engine at curb idle rpm, foot brakes applied and vehicle on level surface, move the transmission selector lever through each range, allowing time in each range to engage transmission, return to Park P position, and apply parking brake. **Do not turn off the engine during the fluid level check.**
2. Clean all dirt from the transmission fluid dipstick cap before removing the dipstick from the filler tube.
3. Pull the dipstick out of the tube, wipe it clean, and push it all the way

back into the tube. Be sure it is fully seated.

4. Pull the dipstick out of the tube again and check the fluid level. The fluid level should be between the **add** and **full** mark. If additional fluid is required, add enough fluid through the filler tube to bring the level between the **add** and **full** marks on the dipstick. **Do not overfill the transmission,** as this will result in foaming and loss of fluid through the vent and possible transmission malfunction.
5. Install the dipstick, making sure it is fully seated in the tube.

Transmission at Room Temperature (70 Degrees F to 95 Degrees F)

1. With transmission in Park P position, engine at curb idle rpm, foot brakes applied and vehicle on level surface, move the transmission selector lever through each range allowing time in each range to engage transmission, return to Park P position and apply parking brake. **Do not turn off the engine during the fluid level check.**
2. Clean all dirt from the transmission fluid dipstick cap before removing the dipstick from the filler tube.
3. Pull the dipstick out of the tube, wipe it clean, and push it all the way back into the tube. Be sure it is fully seated.
4. Pull the dipstick out of the filler tube again and check the fluid level. For **C4 and FMX transmission,** the fluid level should be between the middle and top holes on the dipstick. If the fluid level is below the middle hole, add enough fluid through the filler tube to bring the level between the **middle hole** and the **add** mark. For **C6 transmissions,** the fluid level should be between the middle and top holes on the dipstick. If the fluid level is below the middle hole, add enough fluid through the filler tube to bring the level between the **middle and top** holes.
5. Install the dipstick, making sure it is fully seated in the tube.

If the transmission fluid level is correctly established at 70 degrees F to 95 degrees F, it will appear between the **add** and **full** marks on the dipstick when the transmission reaches an operating temperature of 150 degrees F to 170 degrees F. This fluid is set between the middle hole and the **add** mark for C4 and FMX transmissions and between the middle and top holes for the C6 transmission to allow for expansion of the fluid as transmission temperatures rise to normal operating temperatures of 150 degrees F to 170 degrees F. **Do not overfill;** however, if fluid is too low, extreme cold temperatures will contract the fluid, which may result in transmission malfunction.

FLUID AERATION CHECK

A fluid level that is too high will cause the fluid to become aerated: Aerated fluid will cause low control pressure, and the aerated fluid may be forced out the vent.

Check the transmission fluid level. Low fluid level can affect the operation of the transmission, and may indicate fluid leaks that could cause transmission damage.

TRANSMISSION FLUID LEAKAGE CHECKS

Check the speedometer cable connection at the transmission. Replace the rubber seal if necessary.

On an FMX transmission, inspect the governor inspection plate for leakage. Install a new gasket if needed.

Leakage at the oil pan gasket often can be stopped by tightening the attaching bolts to the proper torque. If necessary, replace the gasket.

Check the fluid filler tube connection at the transmission case or pan. If leakage is found here, install a new O-ring or tighten the fitting to the specified torque.

Check the fluid lines and fittings between the transmission and the cooler in the radiator tank for looseness, wear, or damage. If leakage cannot be stopped by tightening a fitting, replace the damaged parts.

Check the engine coolant in the radiator. If transmission fluid is present in the coolant, the cooler in the radiator is probably leaking.

The cooler can be further checked for leaks by disconnecting the lines from the cooler fittings and applying 50-75 psi air pressure to the fittings. Remove the radiator cap to relieve the pressure build up at the exterior of the oil cooler tank. If the cooler is leaking and will not hold pressure, the cooler must be replaced. Cooler replacement is described in the Cooling System Section of Group 27.

If leakage is found at either the downshift control lever shaft or the manual lever shaft, replace either or both seals.

Inspect the pipe plug on the left side of the transmission case at the front. If the plug shows leakage, torque the plug to specifications. If tightening does not stop the leaks, replace the plug. On a C6 transmission, a TV pressure plug is also provided on the right rear side of the case.

When a converter drain plug leaks, remove the drain plug with a six-point wrench. Coat the threads with FoMoCo Perfect Seal Sealing Compound or its equivalent, and install the plug. Torque the drain plug to specification. **Fluid leakage from the converter housing may be caused by engine oil leaking past the rear main bearing or from oil gallery plugs, or power steering oil leakage**

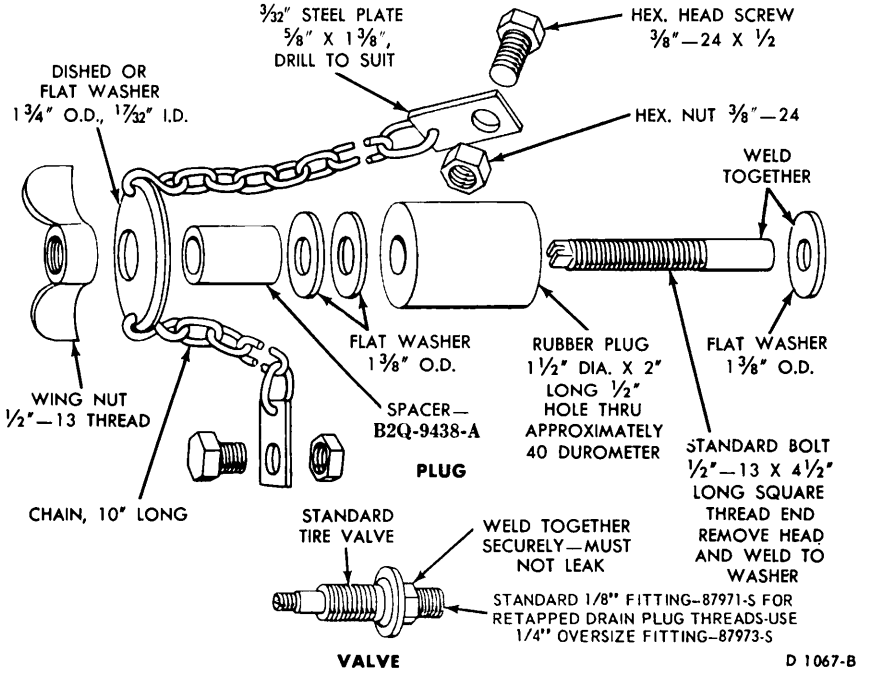

FIG. 2 Converter Leak Checking tool

from steering system. Be sure to determine the exact cause of the leak before repair procedures are started.

Oil-soluble aniline or fluorescent dyes premixed at the rate of 1/2 teaspoon of dye powder to 1/2 pint of transmission fluid have proved helpful in locating the source of the fluid leakage. Such dyes may be used to determine whether an engine oil or transmission fluid leak is present or if the fluid in the oil cooler leaks into the engine coolant system. A black light, however, must be used with the fluorescent dye solution.

CONVERTER LEAKAGE CHECK

If there are indications that the welds on the torque converter are leaking, the converter will have to be removed and the following check made before the unit is replaced.

A leak checking tool (Fig. 2) can be made from standard parts. The tool can be used to check all converters.

1. Install the plug in the converter (Fig. 3) and expand it by tightening the wing nut. Attach the safety chains.
2. Install the air valve in the drain plug hole.
3. Introduce air pressure into the converter. Check the pressure with a tire gauge and adjust it to 20 psi.
4. Place the converter in a tank of water. Observe the weld areas for bubbles. If no bubbles are observed, it may be assumed that the welds are not leaking.

ENGINE IDLE SPEED CHECK

Check and, if necessary, adjust the engine idle speed, using the procedure given in Group 24.

If the idle speed is too low, the engine will run roughly. An idle speed that is too high will cause the vehicle to creep, have harsh engagements and harsh closed-throttle downshifts.

ANTI-STALL DASHPOT CLEARANCE CHECK

After the engine idle speed has been properly adjusted, check the anti-stall dashpot clearance. Follow the procedure given in Group 24 for checking and adjusting this clearance.

CONTROL PRESSURE CHECK

When the vacuum diaphragm unit is operating properly and the downshift linkage is adjusted properly, all the transmission shifts (automatic and kickdown) should occur within the road speed limits specified in the Specifications.

If the shifts do not occur within limits or the transmission slips during shift point, use the following procedure to determine whether the engine, transmission, linkage, vacuum diaphragm unit or valve body is causing the condition.

1. Using the automatic transmission tester (Fig. 4), attach the tachometer to the engine and the vacuum gauge to the transmission vacuum line at the vacuum unit (Fig. 5).

On vehicles equipped with a dual area diaphragm (DAD), check the control pressure at 10 inches of vacuum by removing the exhaust gas recirculation (EGR) control hose from the diaphragm and plugging the hose. **Do not plug the EGR port in the diaphragm; this port must be left open to atmospheric pressure.** When checking the control pressure at stall and idle, keep the hose connected.

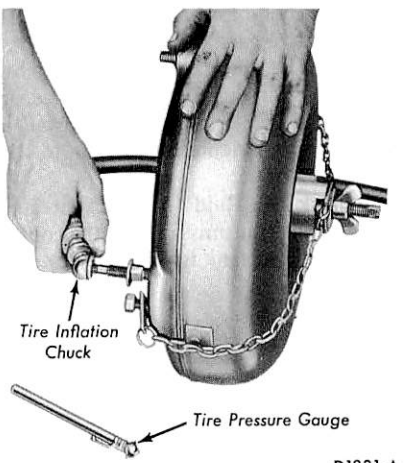

FIG. 3 Converter Leak Checking tool Installation

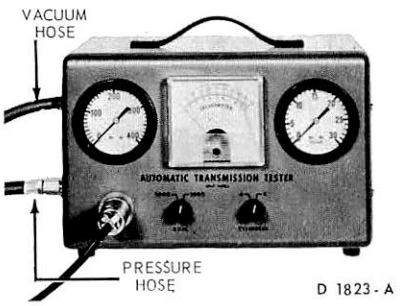

FIG. 4 Rotunda ARE-29-05 Automatic Transmission Tester

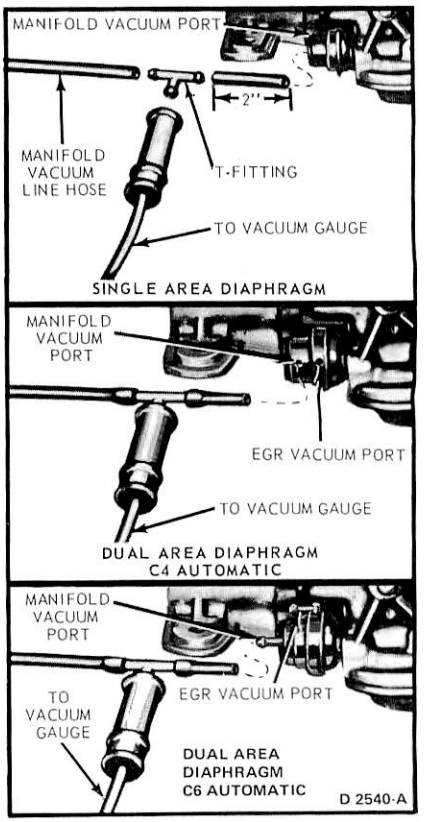

FIG. 5 Typical Vacuum Test Line Connections

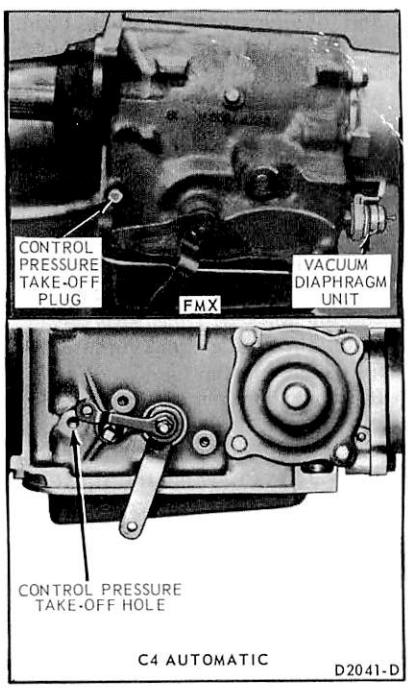

FIG. 6 Typical Vacuum Diaphragm and Control Pressure Connecting Point

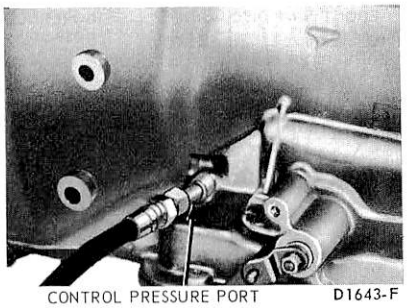

FIG. 7 Control Pressure Connecting Point-C6 Transmission

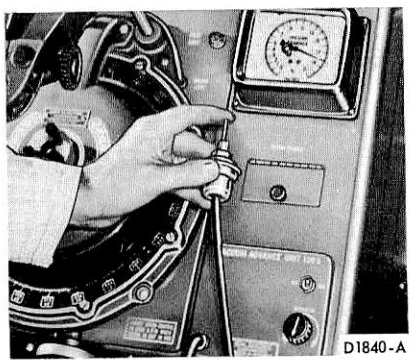

FIG. 8 Testing Transmission Vacuum Unit for Leakage

2. Attach the pressure gauge to the control pressure outlet at the transmission (Figs. 6 and 7).
3. Firmly apply the parking brake and start the engine.
4. Adjust the engine idle speed to the specified rpm. If the engine idle speed cannot be brought within limits by adjustment at the carburetor idle adjustment screw, check the throttle and downshift linkage for a binding condition. If the linkage is satisfactory, check for vacuum leaks in the transmission diaphragm unit (Fig. 8) and its connecting tubes and hoses. Check all other vacuum operated units (such as the power brake) for vacuum leaks.

VACUUM DIAPHRAGM CHECK

To check the vacuum unit for diaphragm leakage, remove the unit from the transmission. Use a distributor tester equipped with a vacuum pump (Fig. 8). Set the regulator knob so that the vacuum gauge reads 18 inches with the end of the vacuum hose blocked off.

Then, on single area diaphragms, connect the vacuum hose to the manifold vacuum port as shown in Fig. 8. On dual area diaphragms, connect the vacuum hose to the EGR port leaving the manifold vacuum port open to the atmosphere. If the gauge still reads 18 inches, the vacuum unit diaphragm is not leaking. As the hose is removed from the transmission vacuum unit, hold a finger over the end of the control rod. When the hose is removed, the internal spring of the vacuum unit should push the control rod outward. If the vacuum diaphragm needs replacing, install a new unit that has been released for service. Refer to the specification section for vacuum diaphragm assembly identification.

STALL TEST

Start the engine to allow it to reach its normal temperature. Apply both the parking and service brakes while making tests.

The stall test is made in D, 2, 1 or R, at full throttle to check engine performance, converter clutch operation or installation, and the holding ability of the forward clutch, reverse-high clutch and low-reverse band and the gear train one-way clutch. **While making this test, do not hold the throttle open for more than five seconds at a time.** Then move the selector lever to Neutral and run engine at 1000 rpm for about 15 seconds to cool the converter before making the next test. If the engine speed recorded by the tachometer exceeds the maximum limits shown in the Specifications, release the accelerator immediately because clutch or band slippage is indicated.

SHIFT POINT CHECKS

Check the minimum throttle upshifts in D. The transmission should start in first gear, shift to second, and then shift to third, within the shift points specified in the specifications.

While the transmission is in third gear, depress the accelerator pedal through the detent (to the floor). The transmission should shift from third to second or third to first, depending on the vehicle speed.

Check the closed throttle downshift from third to first by coasting down from about 30 mph in third gear. The shift should occur within the limits specified in the specifications.

When the selector lever is at 2, the transmission can operate only in second gear.

With the transmission in third gear and road speed over 30 mph, the transmission should shift to second gear when the selector lever is moved from D to 2 to 1. When the same manual shift is made below about 25 mph, the transmission will shift from second or

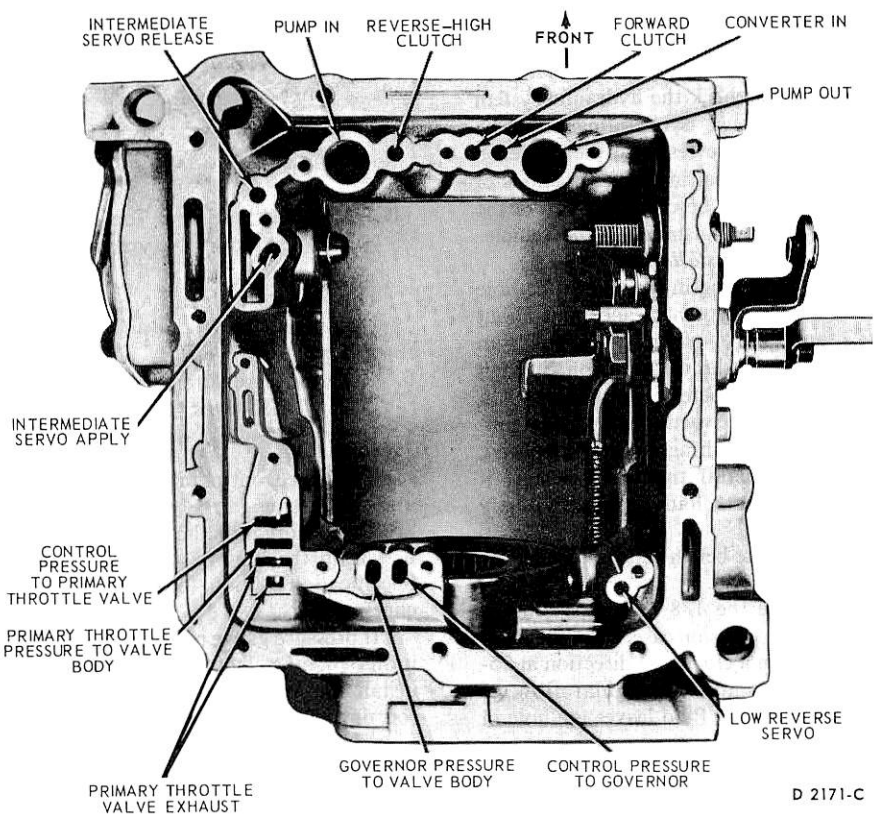

FIG. 9 Case Fluid Passage Hole Identification—C4 Automatic

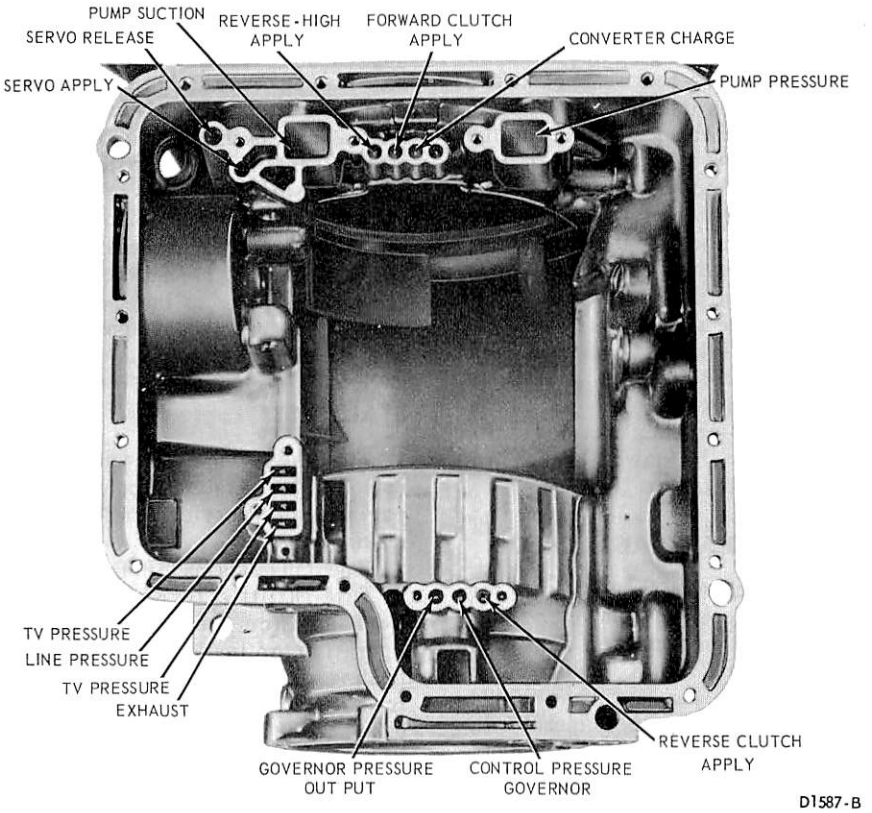

FIG. 10 Case Fluid Passage Hole Identification—C6 Automatic

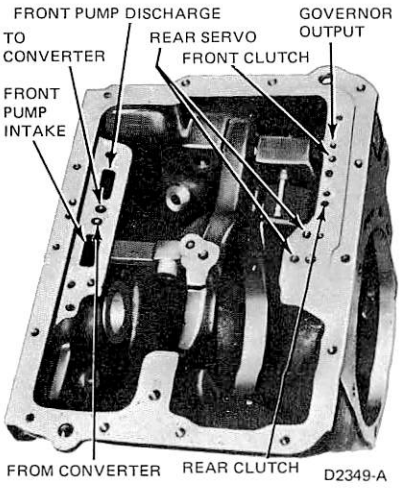

FIG. 11 Case Fluid Passage Hole Identification—FMX Automatic

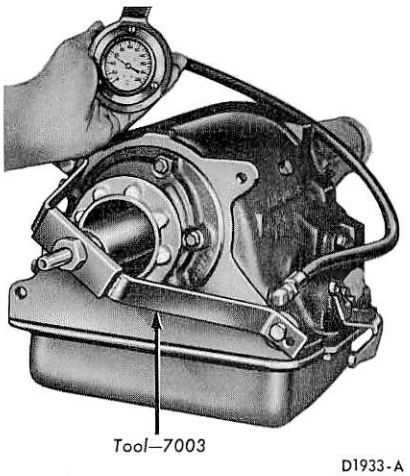

FIG. 12 Bench Testing Tool Installation—Typical

third to first. **This check will determine if the governor pressure and shift control valves are functioning properly.**

During the shift point check operation, if the transmission does not shift within specifications or certain gear ratios cannot be obtained, refer to the Diagnosis Manual to resolve the problem.

AIR PRESSURE CHECKS

A NO DRIVE condition can exist, even with correct transmission fluid pressure, because of inoperative clutches or bands. On automatic transmissions, an erratic shift could be caused by a stuck governor valve. The inoperative units can be located through a series of checks by substituting air pressure for the fluid pressure to determine the location of the malfunction.

To make the air pressure checks, drain the transmission fluid and remove the oil pan and the control valve body assembly. The inoperative units can be located by introducing air pressure into the various transmission case passages (Figs. 9, 10 or 11).

HYDRAULIC SYSTEM BENCH TESTS (FMX TRANSMISSIONS)

After the transmission has been assembled and is ready for installation in the vehicle, check the hydraulic system to make sure it is operating properly. These hydraulic tests can be made on the bench so that most malfunctions of the system can be corrected before the transmission is installed in the vehicle.

Testing Tool Installation

1. Install a plug in the filler tube hole in the case or pan, and pour about four quarts of clean transmission fluid into the transmission through the speedometer gear opening.
2. Remove the vacuum diaphragm unit and the diaphragm unit control rod, and reinstall the vacuum unit if these parts had been previously installed.
3. Install the bench testing tool on the transmission.
4. Remove the 1/8 inch pipe plug at the transmission case. Turn the front pump in a clockwise direction at 75-100 rpm until a regular flow of transmission fluid leaves the hole in the transmission case. This operation bleeds the air from the pump.
5. Install the pressure gauge (77820 or T57L-77820-A) as shown in Fig. 12.

Pressure Tests

Turn the front pump at 75-100 rpm and note the gauge readings. The pressure readings on the bench test must be within the limits as outlined in the Specification Section, for the engine idle check.

If pressure gauge readings are within limits in all selector lever positions, install the vacuum diaphragm control rod unit.

REMOVAL AND INSTALLATION

VACUUM DIAPHRAGM

REMOVAL AND INSTALLATION

1. Disconnect the hoses from the vacuum unit.
2. On C4 and C6 transmissions, remove the vacuum unit retaining bracket bolt and bracket (Fig. 13). Do not pry or bend the bracket. Pull the unit from the transmission case.

On an FMX transmission, remove the vacuum unit with the tool shown in Fig. 14.

3. Remove the control rod.
4. Install the vacuum unit control rod in the case.
5. On C4 and C6 transmissions, push the vacuum unit into the case and secure with the retaining bracket and bolt. Tighten the bolt 28-40 ft-lbs on C4 transmissions and 12-16 ft-lbs on C6 transmissions.

On an FMX transmission, thread the vacuum unit into the case and using a torque wrench with the tool shown in Fig. 14, tighten the unit to 15-23 ft-lbs torque.

6. Install the vacuum unit hoses to their respective connectors.

TRANSMISSION FLUID DRAIN AND REFILL

Normal maintenance and lubrication requirements do not necessitate periodic automatic transmission fluid changes.

If a major repair, such as a clutch band, bearing, etc., is required in the transmission, it will have to be removed for service. At this time the converter, transmission cooler and cooler lines must be thoroughly flushed to remove any dirt.

When filling a dry transmission and converter, install five quarts of fluid in C4 transmissions and eight quarts in C6 and FMX transmissions. Then, check the fluid level following the room temperature checking procedures described in this Part.

Following are the procedures for partial drain and refill due to in-vehicle repair operation.

C4 or MX Transmissions

1. Disconnect the fluid filler tube from the transmission oil pan to drain the fluid.
2. When the fluid has stopped draining from the transmission, remove and thoroughly clean the pan and the screen. Discard the pan gasket.
3. Place a new gasket on the pan, and install the pan on the transmission.
4. Connect the filler tube to the pan and tighten the fitting securely.
5. Add three quarts of fluid to the transmission through the filler tube.
6. Check the fluid level following the room temperature checking procedures described in this Part.

C6 or FMX Transmission

1. Raise the vehicle on a hoist or jack stands.
2. Place a drain pan under the transmission.
3. Loosen the pan attaching bolts to drain the fluid from the transmission.
4. After the fluid has drained to the level of the pan flange, remove the rest of the pan bolts working from the rear and both sides of the pan to allow it to drop and drain slowly.
5. When the fluid has stopped draining from the transmission, remove and thoroughly clean the pan and the screen. Discard the pan gasket.
6. Place a new gasket on the pan, and install the pan on the transmission
7. Add three quarts of fluid to the transmission through the filler tube.
8. Check the fluid level following the room temperature checking procedures described in this Part.

OIL COOLER TUBE REMOVAL AND INSTALLATION

When fluid leakage is found at the oil cooler, the cooler must be replaced. Cooler replacement is described in the Cooling System Section of Group 27.

When one or more of the fluid cooler steel tubes must be replaced, each replacement tube must be fabricated from the same size steel tubing as the original line.

Using the old tube as a guide, bend the new tube as required. Add the necessary fittings, and install the tube.

After the fittings have been tightened, add fluid as needed, and check for fluid leaks.

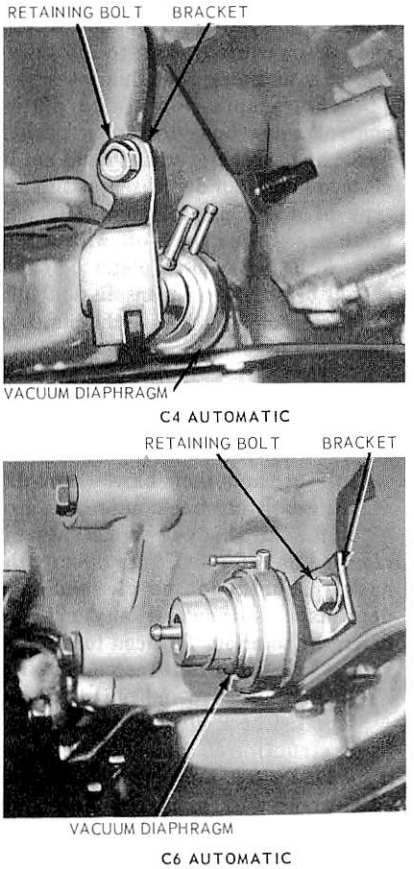

FIG. 13 Vacuum Diaphragm Installed-C4 and C6 Transmission

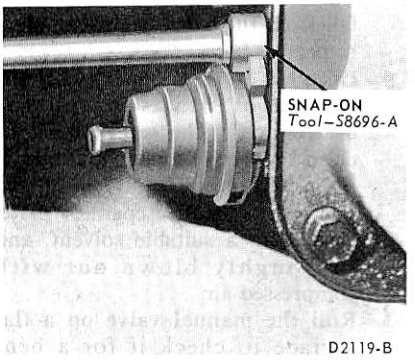

FIG. 14 Removing or Installing Vacuum Diaphragm FMX Transmission

CLEANING AND INSPECTION

TRANSMISSION

Clean the parts with suitable solvent and use moisture-free air to dry off all the parts and clean out fluid passages.

The composition clutch plates, control valve body-to-screen gasket, bands and synthetic seals should not be cleaned in a vapor degreaser or with any type of detergent solution. To clean these parts, wipe them off with a lint-free cloth. New clutch plates or bands should be soaked in transmission fluid for fifteen minutes before the plates or bands are assembled.

CONTROL VALVE BODY

1. Clean all parts thoroughly in clean solvent, and then blow them dry with moisture-free compressed air.

If the valve body-to-screen gasket is removed on a C4 or C6 Automatic, the gasket should not be cleaned in a degreaser, solvent or any type of detergent solution. To clean the gasket, wipe it off with a lint-free cloth.

2. Inspect all valve and plug bores for scores. Check all fluid passages for obstructions. Inspect the check valve for free movement. Inspect all mating surfaces for burrs or distortion. Inspect all plugs and valves for burrs or scores. **Crocus cloth can be used to polish valves and plugs if care is taken to avoid rounding the sharp edges of the valves and plugs.**
3. Inspect all springs for distortion. Check all valves and plugs for free movement in their respective bores. Valves and plugs, when dry, must fall from their own weight in their respective bores.
4. On a C6 transmission, inspect the separator plate screen for obstructions. The screen must be clean and free of foreign material. If it is contaminated, it should be removed from the separator plate, cleaned in a suitable solvent, and thoroughly blown out with compressed air.
5. Roll the manual valve on a flat surface to check it for a bent condition.

INTERMEDIATE SERVO (C4 AND C6 TRANSMISSIONS)

1. Inspect the servo bore for cracks and the piston bore and the servo piston stem for scores. Check fluid passages for obstructions. Replace seals that are damaged.
2. Check the servo spring and servo band strut(s) for distortion.
3. Inspect the cover seal and gasket cover sealing surface for damage.

LOW-REVERSE SERVO (C4 TRANSMISSION)

1. Inspect the servo body for cracks and the piston bore for scores.
2. Check the fluid passages for obstructions.
3. Inspect the band and the struts for distortion. Inspect the band ends for cracks.
4. Inspect the servo spring for distortion.
5. Inspect the band lining for excessive wear and bonding to the metal band.
6. Replace seals that are damaged.

FRONT SERVO (FMX TRANSMISSIONS)

1. Inspect the servo bore for cracks and the piston bore and the servo piston stem for scores. Check fluid passages for obstructions. Replace seals that are damaged.
2. Check the actuating lever for free movement, and inspect it for wear. If necessary to replace the actuating lever or shaft, remove the retaining pin and push the shaft out of the bracket.

Inspect the adjusting screw threads and the threads in the lever for damage.

3. Check the servo spring and servo band strut(s) for distortion.

REAR SERVO (FMX TRANSMISSION)

1. Inspect the servo body for cracks and the piston bore for scores.
2. Check the fluid passages for obstructions.
3. Inspect the band and the struts for distortion. Inspect the band ends for cracks.
4. Inspect the servo spring for distortion.
5. Inspect the band lining for excessive wear and bonding to the metal band.
6. Check the servo body to case mating surface for burrs. Check the accumulator piston and the check valve for freedom of movement. Check the actuating lever socket for scores.
7. Replace seals that are damaged.

EXTENSION HOUSING

1. Inspect the housing for cracks. Inspect the gasket surface for burrs or warpage. Check for leakage around the governor inspection cover and gasket on an FMX transmission. If leakage is found, install a new gasket.
2. Inspect the bushing for scores or wear.
3. Inspect the rear seal for hardness, cracks, or wear. If the seal shows wear or deterioration, replace the seal.
4. Inspect the seal counterbore and remove all burrs and scores with crocus cloth.

GOVERNOR

1. Inspect the governor valves and bores for scores. Minor scores may be removed from the valves with crocus cloth. Replace the governor if the valves or body is deeply scored.
2. On an FMX transmission, inspect the governor screen for obstructions. The screen must be clean and free of foreign material. If it is contaminated, it should be cleaned in a suitable solvent and thoroughly blown out with compressed air.
3. Check for free movement of the valves in the bores. The valves should slide freely of their own weight in the bores when dry. Inspect fluid passages in the valve body and counterweight for obstructions. **All fluid passages must be clean.**
4. Inspect the mating surfaces of the governor body and governor distributor (C4 or C6 Automatic) for burrs and distortion. Mating surfaces must be smooth and flat.
5. Check the mating surface of the governor valve and the counterweight on an FMX transmission for burrs or scratches.

PRESSURE REGULATOR (FMX TRANSMISSION)

1. Inspect the regulator body and cover mating surface for burrs.
2. Check all fluid passages for obstructions.
3. Inspect the control pressure and converter pressure valves and bores for burrs and scores. Remove all burrs carefully with crocus cloth.
4. Check free movement of the valves

in their bores. The valves should fall freely into the bores when both the valve and bore are dry.
5. Inspect the valve springs and spacers for distortion.

FRONT PUMP

1. Inspect the mating surfaces of the pump body and cover for burrs.
2. Inspect the drive and driven gear bearing surface for scores, and check the gear teeth for burrs.
3. Check the fluid passages for obstructions.
4. If any parts are found defective, replace the pump as a unit. Minor burrs and scores may be removed with crocus cloth.
5. On a C6 transmission, check the large seal ring groove of the pump body for damage. Check the gasket mating surface of the pump body for damage.

REAR PUMP (FMX TRANSMISSION)

1. Remove the drive gear from the pump body.
2. Inspect the gear pocket of the pump body for scores or pitting.
3. Inspect the inner bushing and the drive gear bearing surface for scores.
4. Check all fluid passages for obstructions, and check mating surfaces and gasket surfaces of the pump body and cover for burrs.
5. Inspect the pump cover bearing surface for scores. Minor burrs or scores may be removed with crocus cloth.

REVERSE-HIGH CLUTCH (C4 AND C6 TRANSMISSIONS)

1. Inspect the drum band surface, the bushing, and thrust surfaces for scores. Minor scores may be removed with crocus cloth. **Badly scored parts must be replaced.**

Inspect the clutch piston bore and the piston inner and outer bearing surfaces for scores. Check the air bleed ball valve in the clutch piston for free movement. Check the orifice to make sure it is not plugged.

2. Check the fluid passages for obstructions. All fluid passages must be clean and free of obstructions.
3. Inspect the clutch plates for wear and scoring and check the plates for fit on the clutch hub serrations. Replace all plates that are badly scored, worn or do not fit freely in the hub serrations.
4. Inspect the clutch pressure plate for scores on the clutch plate bearing surface. Check the clutch release spring(s) for distortion.

FORWARD CLUTCH (C4 AND C6 TRANSMISSIONS)

1. Inspect the clutch cylinder thrust surfaces, piston bore, and clutch plate serrations for scores or burrs. Minor scores or burrs may be removed with crocus cloth. Replace the clutch cylinder if it is badly scored or damaged.
2. Check the fluid passage in the clutch cylinder for obstructions. Clean out all fluid passages. Inspect the clutch piston for scores and replace if necessary. Inspect the piston check ball for freedom of movement and proper seating (Fig. 15).
3. Check the clutch release spring for distortion and cracks. Replace the spring if it is distorted or cracked.
4. Inspect the composition and the steel clutch plates and the clutch pressure plate for worn or scored bearing surfaces. Replace all parts that are deeply scored.
5. On C4 transmissions, check the clutch plates for flatness and fit on the clutch hub serrations. Discard any plate that does not slide freely on the serrations or that is not flat.
6. Check the clutch hub thrust surfaces for scores and the clutch hub splines for wear.
7. Check the splines on the turbine shaft for wear and replace the shaft if the splines are excessively worn. Inspect the bushing in the turbine shaft for scores. Check the input shaft for damaged or worn splines.

REAR CLUTCH (FMX TRANSMISSION)

1. Inspect the drum band surface, the bushing, and thrust surfaces for scores. Minor scores may be removed with crocus cloth. **Badly scored parts must be replaced. Inspect the clutch piston bore and the piston inner and outer bearing surfaces for scores. Check the air bleed ball valve in the clutch piston for free movement. Check the orifice to make sure it is not plugged.**
2. Check the fluid passages for obstructions. All fluid passages must be clean and free of obstructions.
3. Inspect the clutch plates for wear and scoring and check the plates for fit on the clutch hub serrations. Replace all plates that are badly scored, worn or do not fit freely in the hub serrations.
4. Inspect the clutch pressure plate for scores on the clutch plate bearing surface. Check the clutch release spring(s) for distortion.
5. Inspect the needle bearing for worn rollers.

FRONT CLUTCH (FMX TRANSMISSION)

1. Inspect the clutch cylinder thrust surfaces, piston bore, and clutch plate serrations for scores or burrs. Minor scores or burrs may be removed with crocus cloth. Replace the clutch cylinder if it is badly scored or damaged.
2. Check the fluid passage in the clutch cylinder for obstructions. Clean out all fluid passages. Inspect the clutch piston for scores and replace if necessary. Inspect the piston check ball for freedom of movement and proper seating (Fig. 15).
3. Check the clutch release spring for distortion and cracks. Replace the spring if it is distorted or cracked.
4. Inspect the composition and the steel clutch plates and the clutch pressure plate for worn or scored bearing surfaces. Replace all parts that are deeply scored.
5. Check the clutch plates for flatness and fit on the clutch hub serrations. Discard any plate that does not slide freely on the serrations or that is not flat.
6. Check the clutch hub thrust surfaces for scores and the clutch hub splines for wear.

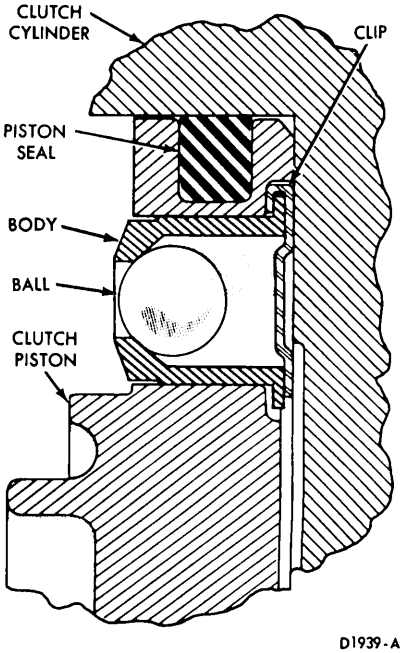

FIG. 15 Clutch Piston Check Valve

7. Inspect the turbine shaft bearing surfaces for scores. If excessive clearance or scores are found, discard the unit.
8. Check the splines on the turbine shaft for wear and replace the shaft if the splines are excessively worn. Inspect the bushing in the turbine shaft for scores.

ONE-WAY CLUTCH

1. Inspect the outer and inner races for scores or damaged surface area where the rollers contact the races. If the outer race on the C6 transmission is damaged on the lowreverse clutch hub it must be replaced.
2. Inspect the rollers and springs for excessive wear or damage.
3. Inspect the spring and roller case for bent or damaged spring retainers.

PRIMARY SUN GEAR SHAFT (FMX TRANSMISSION)

1. Inspect the primary sun gear for broken or worn teeth. Inspect all thrust surfaces and journals for scores. Check all fluid passages (Fig. 16) for obstructions and leakage. Inspect the seal ring grooves for burrs.
2. Inspect the sun gear shaft splines for burrs and wear.
3. Check the fit of the seal rings in the grooves of the shaft. The rings should enter the grooves freely without bind.
4. Check the fit of the seal rings in their respective bores. A clearance of 0.002-0.009 inch should exist between the ends of the rings.
5. Install the seal rings on the shaft, and check for free movement in the grooves.

CONVERTER AND OIL COOLER

When internal wear or damage has occurred in the transmission, metal particles, clutch plate or band material may have been carried into the converter and oil cooler. These contaminants are a major cause of recurring transmission troubles and **MUST** be removed from the system before the transmission is put back into service.

Whenever a transmission has been disassembled to replace worn or damaged parts or because the valve body sticks from foreign material, the converter and oil cooler **MUST** be cleaned by using a mechanically agitated cleaner, such as Rotunda LRE-60081. Under **NO** circumstances should an attempt be made to clean converters or oil coolers by hand agitation with solvent.

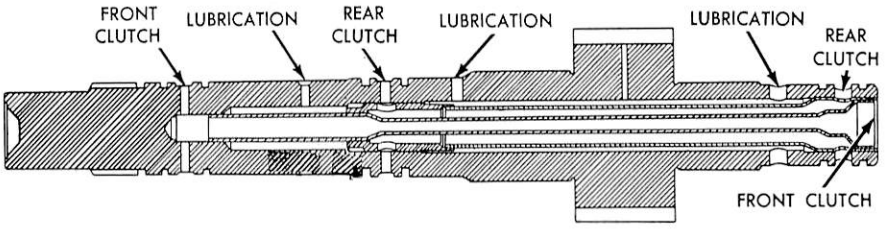

FIG. 16 Primary Sun Gear Shaft—Cross Sectional View

TURBINE AND STATOR END PLAY CHECK

A special tool (Fig. 17) must be used to check the condition of the converter. This special tool is used to check the turbine and stator end play and the operation of the one-way stator clutch.

1. Insert the tool (Fig. 18) into the converter pump drive hub until it bottoms.
2. Install the guide over the converter pump drive hub.
3. Expand the split fiber bushing in the turbine spline by tightening the adjusting nut. Tighten the adjusting nut until the tool is securely locked into the spline.
4. Attach a dial indicator to the tool (Fig. 18). Position the indicator button on the converter pump drive hub, and set the dial face at 0 (zero).
5. Lift the tool upward as far as it will go and note the indicator reading. The indicator reading is the total end play which the turbine and stator share. If the total end play exceeds the limits specified in the Specifications, replace the converter unit.
6. Loosen the adjusting nut to free the split bushing, and then remove the tool from the converter.

STATOR ONE-WAY CLUTCH CHECK

1. Install the stator outer race holding tool in one of the four holes provided in the stator (Fig. 19).
2. Insert the tool in the converter pump drive hub so the splines engage the one-way clutch inner race (Fig. 19).
3. Place the guide over the tool to keep the stator race holding tool from turning. Then, hold the guide stationary and place a torque wrench on the tool (Fig. 19). The tool (and stator inner race) should turn freely clockwise (from the pump drive hub inside the converter). It should lock up and hold a 10 ft-lb pull when the wrench is turned counterclockwise. Try the clutch for lock up and hole in at least five different locations around the converter.
4. If the clutch fails to lock up and hold a 10 ft-lb torque, replace the converter unit.

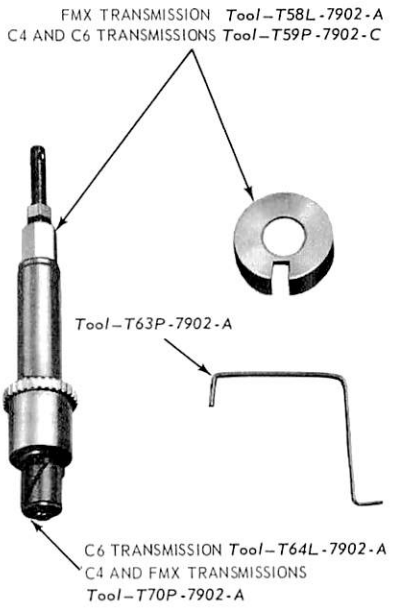

FIG. 17 Converter Checking Tool

STATOR TO IMPELLER INTERFERENCE CHECK

1. Position the front pump assembly on a bench with the spline end of the stator shaft pointing up (Fig. 20).

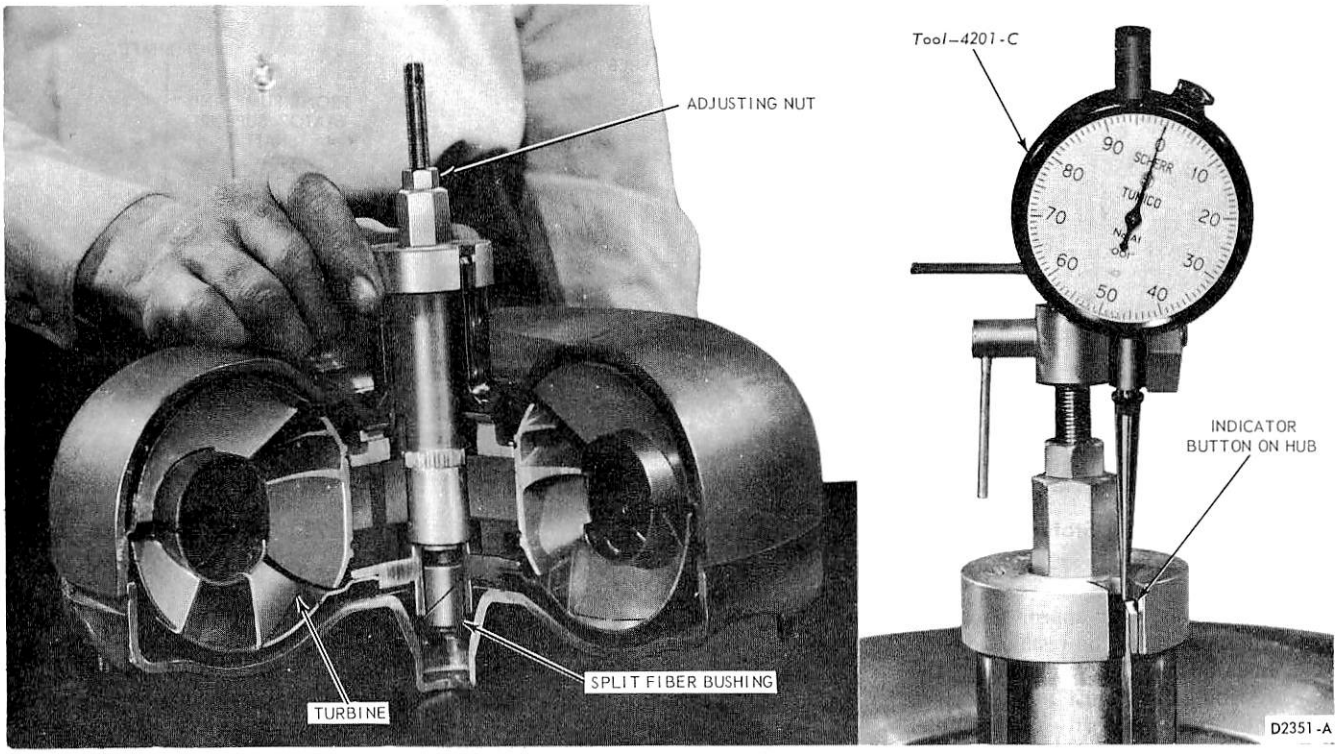

FIG. 18 Checking Turbine and Stator End Play

2. Mount a converter on the pump so that the splines on the one-way clutch inner race engage the mating splines of the stator support, and the converter hub engages the pump drive gear.
3. While holding the pump stationary, try to rotate the converter counterclockwise. The converter should rotate freely without any signs of interference or scraping within the converter assembly.
4. If there is an indication of scraping, the trailing edges of the stator blades may be interfering with the leading edges of the impeller blades. In such cases, replace the converter.

STATOR TO TURBINE INTERFERENCE CHECK

1. Position the converter on the bench front side down.
2. Install a front pump assembly to engage the mating splines of the stator support and stator, and pump drive gear lugs.
3. Install the input shaft, engaging the splines with the turbine hub (Fig. 21).
4. While holding the pump stationary, attempt to rotate the turbine with the input shaft. The turbine should rotate freely in both directions without any signs of interference or scraping noise.
5. If interference exists, the stator front thrust washer may be worn, allowing the stator to hit the turbine. In such cases, the converter must be replaced.

The converter crankshaft pilot should be checked for nicks or damaged surfaces that could cause interference when installing the converter into the crankshaft. Check the converter front pump drive hub for nicks or sharp edges that would damage the pump seal.

OUTPUT SHAFT (FMX TRANSMISSION)

1. Inspect the thrust surfaces and journals for scores. Inspect the internal gear for broken or worn teeth.
2. Inspect the ring grooves for burrs.
3. Inspect the keyway and drive ball pocket for wear, and inspect the splines for burrs, twist or wear.
4. Inspect the external parking gear teeth for damage and the speedometer drive gear teeth for burrs.
5. If either the output shaft or ring gear has been replaced, place the assembled unit with the gear face down on the bench, push the shaft downward, and check the clearance between the top of the snap ring and its groove (Fig. 22). If this clearance exceeds 0.002 inch, replace the snap ring with a thicker ring to reduce the clearance to less than 0.002 inch. Selective snap rings are available in several thicknesses for this purpose.

DISTRIBUTOR SLEEVE (FMX TRANSMISSION)

1. Inspect the distributor sleeve for scores or excessive ring wear. Inspect the distributor sleeve passages for obstructions.
2. Check the fit of the fluid tubes in the distributors.

PLANET CARRIER AND CENTER SUPPORT (FMX TRANSMISSION)

1. Inspect the clutch outer race, inner race, band surface, pinion gears, bearings, and thrust washer (Fig. 23) for roughness.
2. Inspect the center support bushing for roughness.

PINION CARRIERS (C4 AND C6 TRANSMISSION)

Individual parts of the planet carriers are not serviceable.

1. The pins and shafts in the planet assemblies should be checked for loose fit and/or complete disengagement. Use a new planet assembly if either condition exists. Before installing a planet assembly, the shaft retaining pins should be checked for adequate staking. If

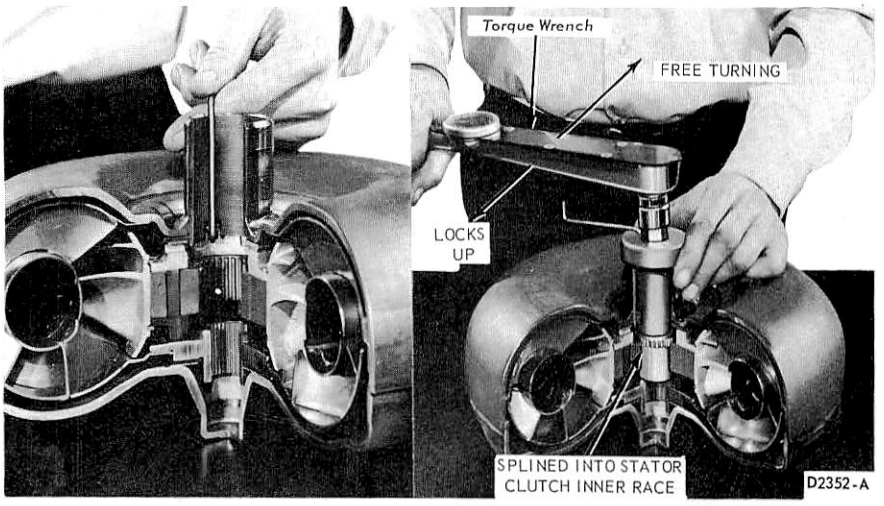

FIG. 19 Checking Stator One-Way Clutch

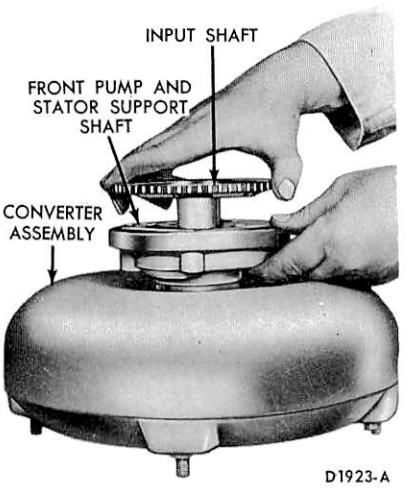

FIG. 21 Stator to Turbine Interference Check

staking does not appear adequate, the pins should be restaked before installation. When restaking, the retaining pins must not be driven into the carrier any further than 0.040 inch below the surface of the carrier.

2. Inspect the pinion gears for damaged or excessively worn teeth.
3. Check for free rotation of the pinion gears.

STATOR SUPPORT

1. Inspect the stator support splines for burrs and wear.
2. On a C4 or C6 Automatic transmission, check the oil ring grooves in the stator support for nicks, burrs or damaged edges.

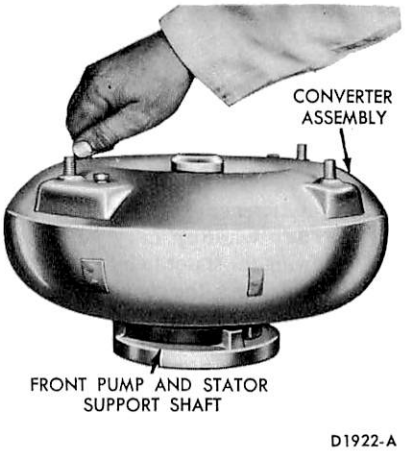

FIG. 20 Stator to Impeller Interference Check

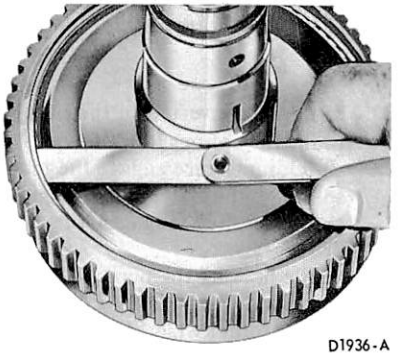

FIG. 22 Checking Output Shaft Snap Ring Clearance

CASE

Inspect the case for cracks and stripped threads. Inspect the gasket surfaces and mating surfaces for burrs. Check the vent for obstructions, and check all fluid passages for obstructions and leakage (Figs. 9, 10 and 11).

Inspect the case bushing for scores. Check all parking linkage parts for wear or damage.

If a transmission case thread is damaged, service kits may be purchased from local jobbers. To repair a damaged thread, the following procedures should be carefully followed.

1. Drill out the damaged threads **using the same drill size as the thread OD.** For example, use a 5/16 inch drill for a 5/16-18 thread.
2. Select the proper **special** tap and tap the drilled hole. The tap is marked for the size of the thread being repaired. Thus, the special tap marked 5/16-18 will not cut the same thread as a standard 5/16-18 tap. It does cut a thread large enough to accommodate the insert, and after the insert is installed, the original thread size (5/16-18) is restored.
3. Select the proper coil inserting tool. These tools are marked with the thread size being repaired. Place the insert on the tool and adjust the sleeve to the length of the insert being used.
   Press the insert against the face of the tapped hole. Turn the tool clockwise and wind the insert into the hole until the insert is 1/2 turn below the face.
4. Working through the insert, bend the insert tang straight up and down until it breaks off at the notch.
5. If the inserts are not properly installed, they can be removed with the extractor tool. Place the extractor tool in the insert so that the blade rests against the top coil 1/4 to 1/2 turn away from the end of the coil. Tap the tool sharply with a hammer so that the blade cuts into the insert. Exert downward pressure on the tool and turn it counterclockwise until the insert is removed.

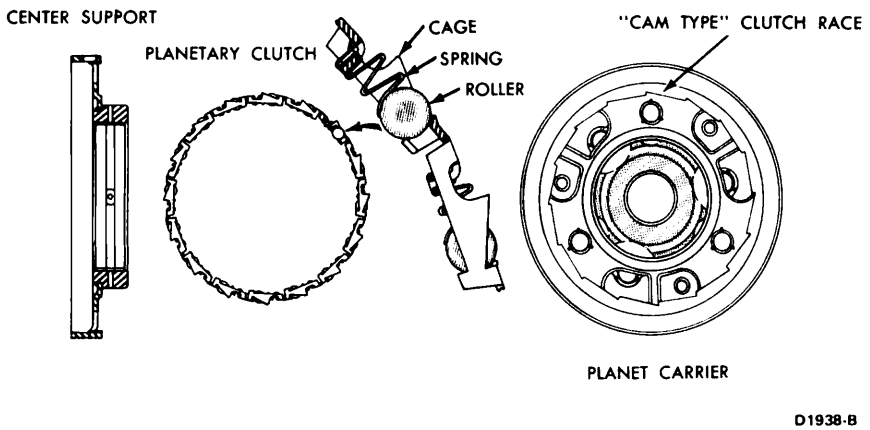

FIG. 23 Roller Type Planetary Clutch, Carrier and Center Support

SPECIFICATIONS

SPECIAL SERVICE TOOLS

Tool No.	Former No.	Description	Tool No.	Former No.	Description
ARE-29-05		Automatic Transmission Tester	T59P-7902-C		Welded Converter Sprag Driver and Gauge
TOOL-S8696-A		Vacuum Diaphragm Wrench			C4 and C6 Trans.
LRE-60081		Torque Converter and Cooler Cleaner	T63P-7902-A		Converter Stator Check Adapter
TOOL-4201-C	4201-C	Differential Backlash and Runout Gauge, with	T64L-7902-A		Welded Converter Sprag Driver and Gauge Post
		Universal Bracket, Dial Indicator and Bracket			Adapter Kit for T59P-7902-C C6 Trans.
TOOL-7003	7003	Bench Test Turning Tool	T70P-7902-A		Welded Converter Sprag Driver and Gauge Post
T58L-7902-A		Welded Converter Sprag Driver and Gauge			Adapter Kit for T59P-7902-C C4, C6 Trans.
		FMX Transmission	T57L-77820-L	77565	400 Lb. Pressure Gauge

VACUUM DIAPHRAGM ASSEMBLY IDENTIFICATION

Transmission Type	Transmission Models	Type ①	Diaphragm Part No.	Identification	Throttle Valve Rod ②	
					Length	Color Identification
C4	PEA-F7, K7, T6, U6, AJ2, AK2	SAD	D3FP-7A377-AA	1 Yellow Stripe	1.505-1.515	Blue Daub
					1.555-1.565	None
	PEA-AL, J7, K7, R6, S6, AG2, AH2	DAD	D3OP-7A377-AA	1 Red Stripe	1.605-1.615	Yellow Daub
C6	PGB-AC8, AT	DAD	D3AP-7A377-CB	1 Yellow Stripe	1.601-1.611	Yellow Daub
					1.634-1.644	Blue Daub
					1.650-1.660	Green Daub
	PGB-AP4, BB, BC	SAD	D3TP-7A377-AA	2 Orange Stripes	1.667-1.677	None
					1.700-1.710	White Daub
FMX	PHC	SAD	C1AP-7A377-B	1 Yellow Stripe		

① DAD – Dual Area Diaphragm; SAD – Single Area Diaphragm.
② Before replacing the throttle valve rod on C4 and C6 transmissions, check the line pressure. If the line pressure is below specifications, use the next longest rod. If the line pressure is above specifications, use the next shortest rod. (Refer to the Specifications Booklet for control pressure specifications).

CD2356-B

PART 17-02 Shift Control Linkage

Applies to F-100, F-250, F-350, B-600-700, F-600, P-350, P-400, P-500, Econoline and Bronco

COMPONENT INDEX	Page	COMPONENT INDEX	Page
DOWNSHIFT LINKAGE		NEUTRAL START SWITCH	
Adjustment	02-01	Adjustment	02-01
MANUAL LINKAGE		Removal and Installation	02-05
Adjustments	02-01	SPECIFICATIONS	02-07
MANUAL LINKAGE GROMMET		THROTTLE LINKAGE	
Removal and Installation	02-05	Adjustment	02-01

ADJUSTMENTS

The transmission control linkage adjustments should be performed in the order in which they appear in this section of the manual. Before the linkage is adjusted, be sure the engine idle speed and anti-stall dashpot are properly adjusted. Refer to Group 24 for the procedure.

MANUAL LINKAGE ADJUSTMENTS

F-100-250-350, BRONCO AND ECONOLINE

1. With the engine stopped, place the transmission selector level in the D position and hold against the D stop.
2. Loosen the shift rod adjusting nut at point A (Fig. 1, 2 or 3).
3. Shift the manual lever at the transmission into the D position, second detent position from the back of the transmission.
4. With the transmission selector lever and manual lever in the D position, tighten the nut at point A to 12-18 ft-lbs torque (Fig. 1, 2 or 3). **Under no circumstances should the linkage be adjusted in any position other than the D position.**
5. Operate the shift lever in all positions to make certain that the manual lever at the transmission is in full detent in all gear ranges. Readjust the linkage if required.

P-350-400-500

1. With the engine stopped, disconnect the upper end of the manual shift rod from the shift lever (Fig. 4).
2. Position the selector lever so that the pointer is against the steering column stop in the N position.
3. Shift the manual lever on the transmission to the N position, fourth from the rear.
4. Rotate the trunnion on the manual shift rod until the pin can be easily inserted in the lever. Then, turn the trunnion two full turns counterclockwise to lengthen the rod.
5. Connect the trunnion to the shift lever.
6. As a final check, operate the shift lever in all positions to make certain that the manual lever at the transmission is in full detent in all gear ranges. Readjust manual shift rod if required, one turn at a time.
7. Adjust selector indicator to quandrant if necessary.

B-600-700 AND F-600

1. With the engine stopped, position the transmission selector lever in the D position.
2. Disconnect the shift cable clevis at the transmission manual lever (Fig. 5).
3. Move the transmission manual lever to the D position, second detent position from the front of the transmission.
4. With the transmission manual lever in the D position, adjust the clevis so that it freely enters into the hole of the manual lever.
5. Connect the clevis to the manual lever and secure with the flat washers, spring washer and cotter pin.
6. Operate the shift lever in all positions to make certain that the manual lever at the transmission is in full detent in all gear ranges. It may be necessary to readjust the clevis slightly to obtain the detent position in all drive ranges.

THROTTLE AND DOWNSHIFT LINKAGE ADJUSTMENTS

Adjusting the throttle linkage is important to be certain the throttle and downshift systems are properly adjusted. The downshift system should come in when the accelerator is pressed through detent, and not before detent. Refer to Group 24 for detailed throttle and downshift linkage adjustment procedures.

NEUTRAL START SWITCH ADJUSTMENT

F-100-250-350

1. Loosen the two neutral start switch attaching screws (Fig. 6).
2. Hold the selector lever against the neutral stop.
3. Move the sliding block on the neutral switch to the neutral position. Working from the rear side of the switch, insert an 0.091 inch diameter gauge pin (No. 43 drill) in the gauge pin hole (Fig. 6).
4. Slide the switch as required to permit the switch actuating lever to contact the switch sliding block.

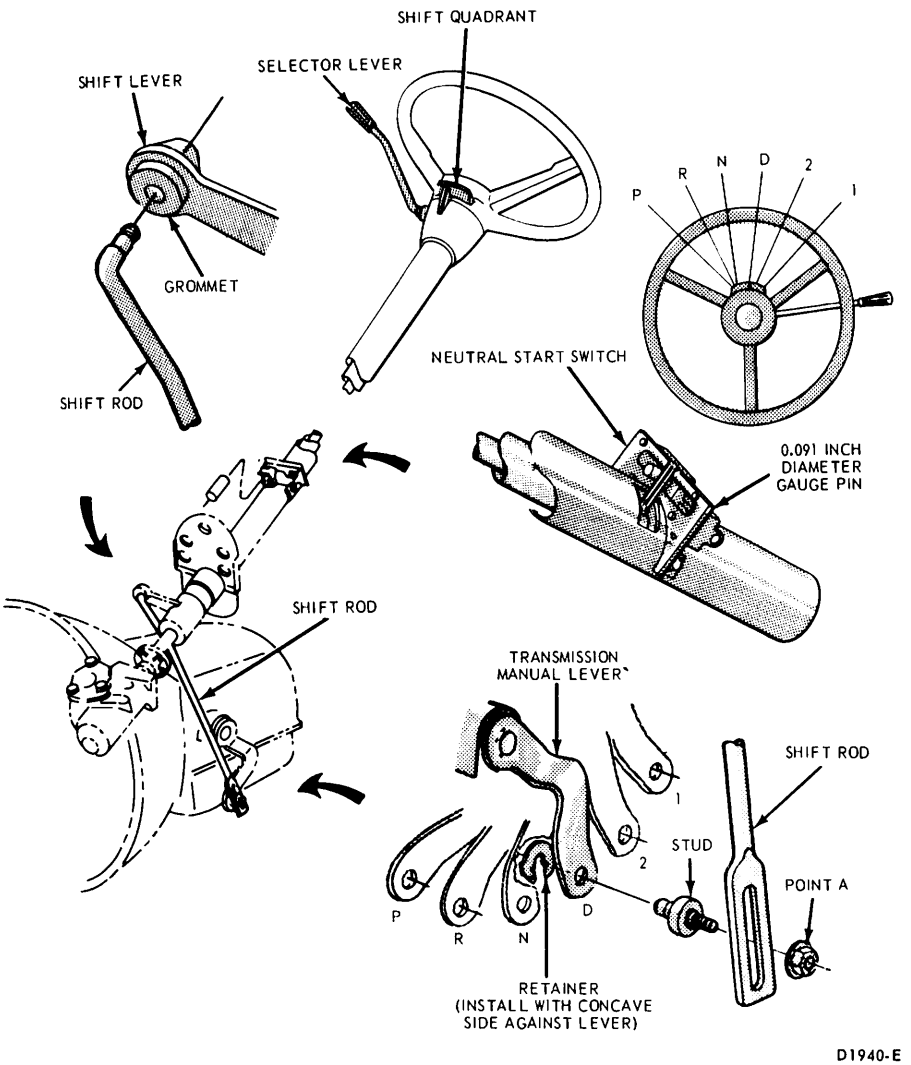

FIG. 1 Manual Linkage Adjustment—F-100-250-350

5. Tighten the two switch attaching screws and remove the gauge pin.
6. Check the operation of the switch. The engine should start only with the transmission selector lever in neutral and park.

ECONOLINE AND BRONCO

1. With the manual linkage properly adjusted, loosen the two switch attaching bolts (Fig. 7).
2. Place the transmission manual lever in neutral. Rotate the switch and insert the gauge pin (No. 43 drill shank end) into the gauge pin holes of the switch. The gauge pin has to be inserted a full 31/64 inch into the three holes of the switch (Fig. 7).
3. Torque the two neutral start switch attaching bolts to specification. Remove the gauge pin from the switch.
4. Check the operation of the switch. The engine should start only with the transmission selector lever in neutral or park.

P-350-400-500

1. Place the selector lever in neutral.
2. Loosen the two neutral start switch attaching screws.
3. Move the neutral start switch until the switch lever is in the neutral detent position (Fig. 8). Tighten the attaching screws.
4. Check the operation of the switch in each selector lever position. The engine should start only with the transmission selector lever in neutral or park.

B-600-700 AND F-600

Check the starter circuit at all selector lever positions. The circuit must be open at all positions except N (neutral). To adjust, loosen the neutral switch to bracket attaching screws (Fig. 9). Position the switch so that the starter circuit is closed when the selector lever is at N.

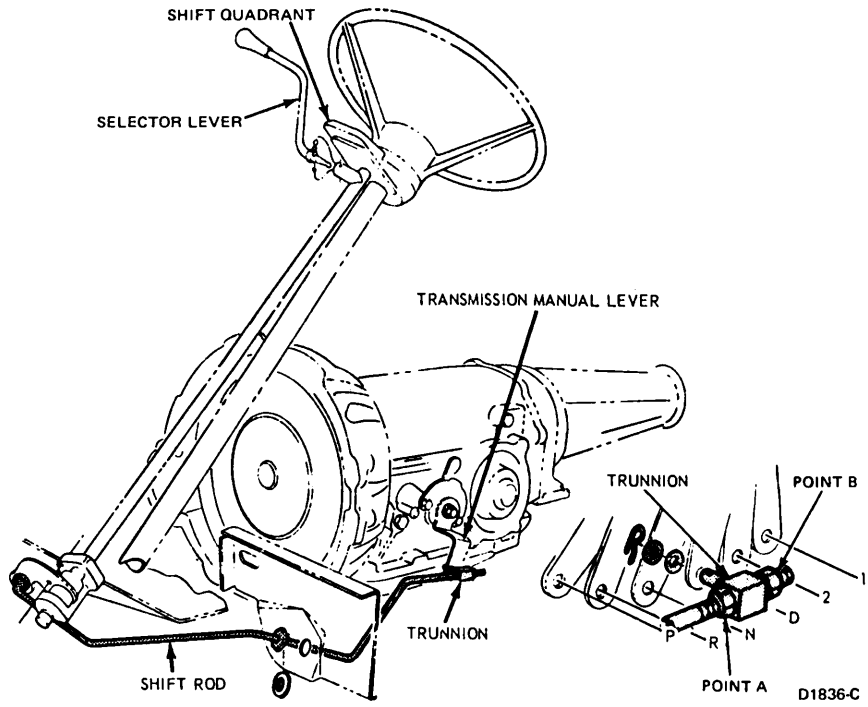

FIG. 2 Manual Linkage Adjustment—Econoline

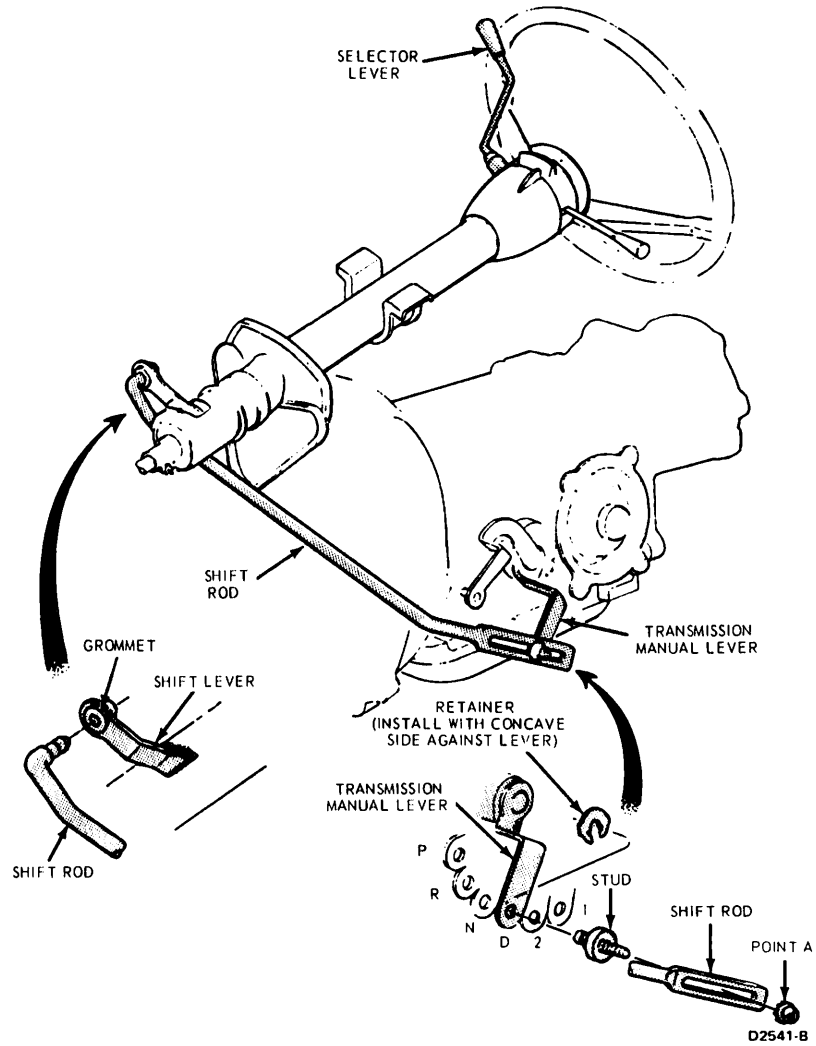

FIG. 3 Manual Linkage Adjustment—Bronco

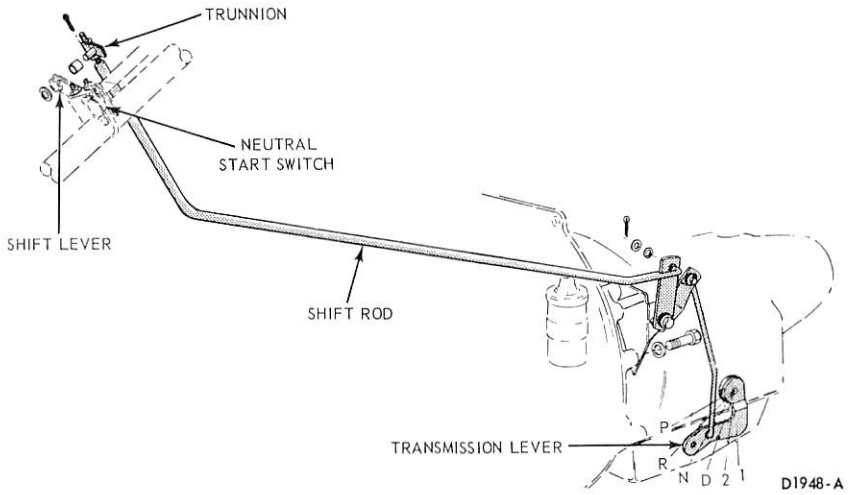

FIG. 4 Manual Linkage Adjustment—P-350-400-500

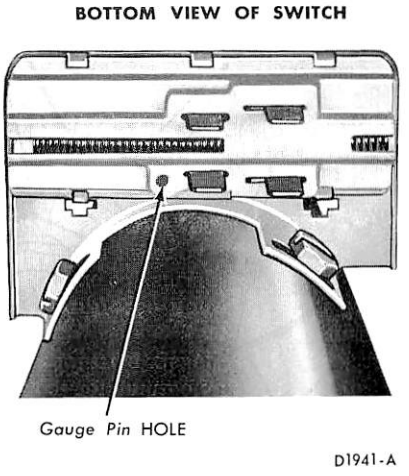

FIG. 6 Typical Neutral Start Switch—F-100-250-350

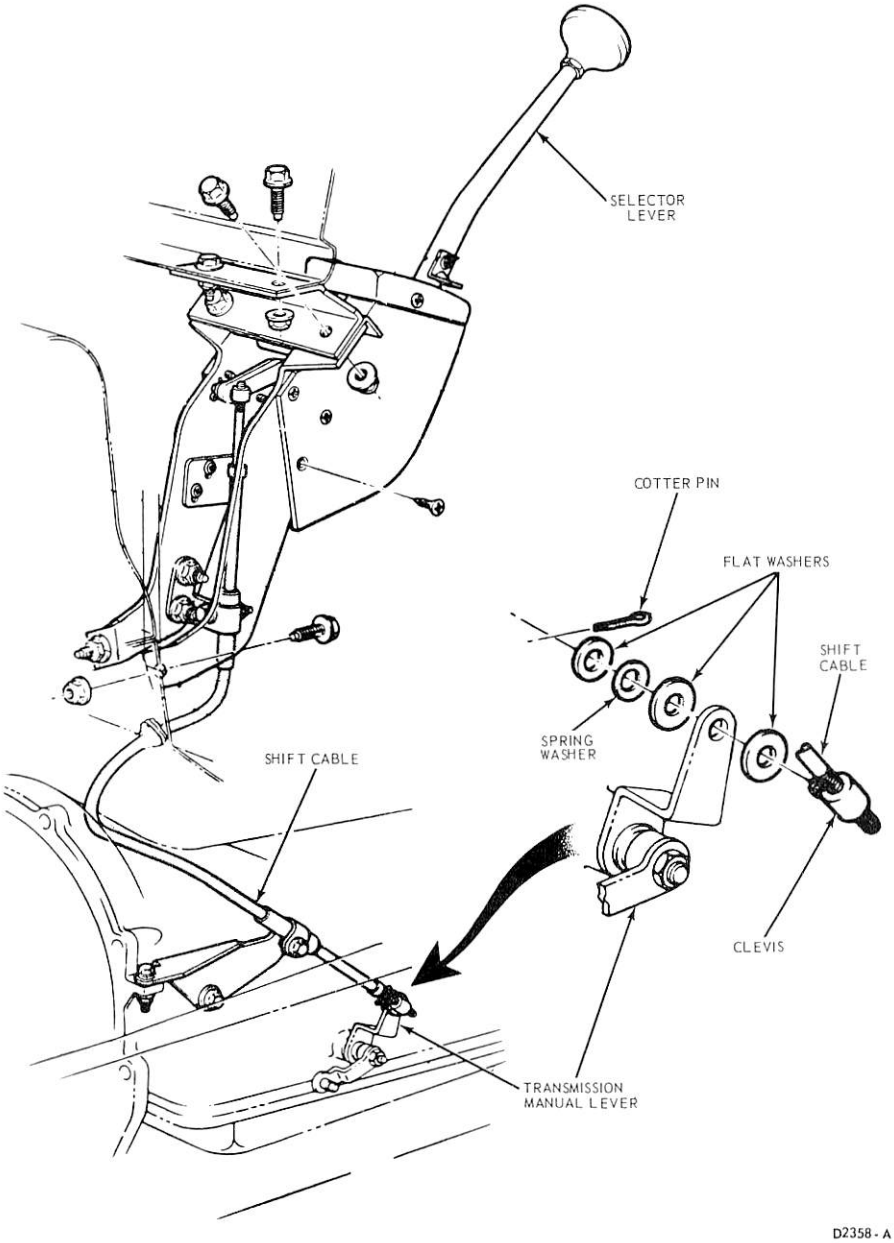

FIG. 5 Manual Linkage Adjustment—B-600-700 and F-600

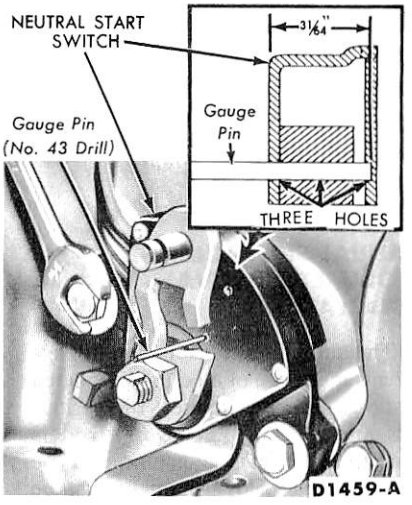

FIG. 7 Neutral Start Switch—Econoline and Bronco

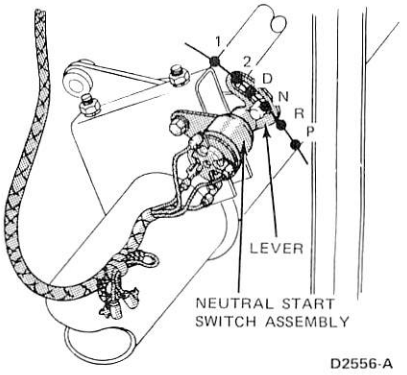

FIG. 8 Neutral Start Switch—P-350-400-500

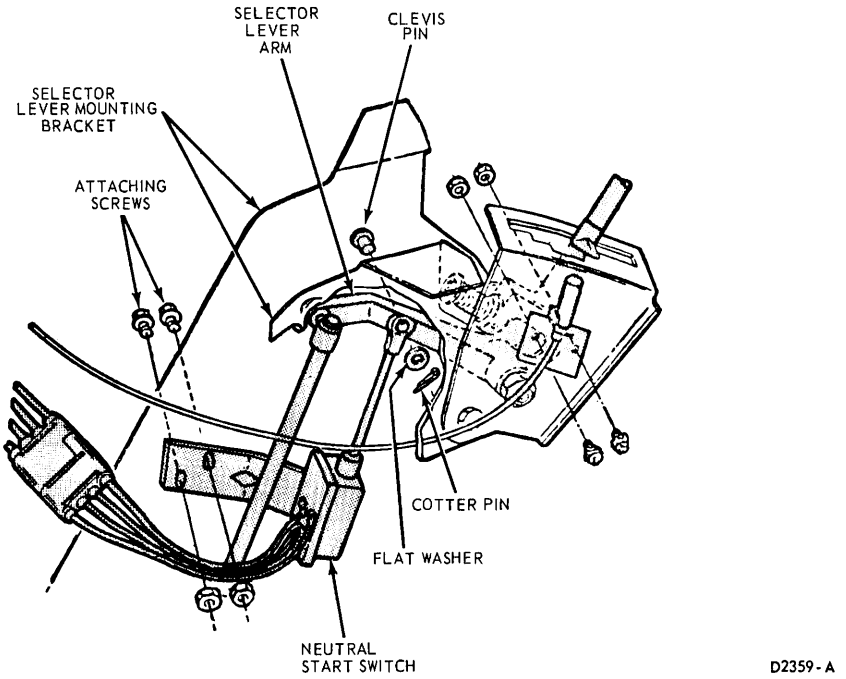

FIG. 9 Neutral Start Switch—B-600-700 and F-600

REMOVAL AND INSTALLATION

MANUAL SHIFT LINKAGE GROMMET REMOVAL AND INSTALLATION

The automatic transmission linkage systems make use of an oil impregnated plastic grommet to connect the various rods and levers. Whenever a rod is disconnected from a grommet type connector, the old grommet must be removed and a new one installed. Remove and install the grommet as follows:

1. Place the lower jaw of the tool between the lever and the rod (Fig. 10). Position the stop pin against the end of the control rod (Fig. 10) and force the rod out of the grommet. Remove the grommet from the lever by cutting off the large shoulder with a sharp knife. **The grommet must be removed from the lever and a new one installed each time the rod is disconnected.**
2. Before installing a new grommet, adjust the stop pin to 1/2 inch and coat the outside of the grommet with lubricant. Then, place the grommet on the stop pin and force it into the lever hole.Turn the grommet several times to be sure it is properly seated.
3. Readjust the stop pin to the height shown in Fig. 10. The pin height is determined by the length of the rod end which is to be installed into the grommet. If the pin height is not adjusted, the rod may be pushed too far through the grommet causing damage to the grommet retaining lip.
4. With the pin height properly adjusted, position the rod on the tool and force the rod into the grommet until the groove in the rod seats on the inner retaining lip of the grommet.

NEUTRAL START SWITCH REMOVAL AND INSTALLATION

F-100-250-350

1. Disconnect the neutral start switch wires at the plug connector.
2. Remove the two screws securing the neutral start switch to the steering column and remove the switch.
3. Position the neutral start switch on the steering column and install the two attaching screws.
4. Hold the selector lever against the neutral stop.
5. Move the sliding block on the neutral switch to the neutral position. Working from the rear side of the switch, insert an 0.091 inch diameter gauge pin (No. 43 drill) in the guage pin hole (Fig. 6).
6. Slide the switch as required to permit the switch actuating lever to contact the switch sliding block.
7. Tighten the switch attaching screws and remove the gauge pin.
8. Connect the switch wires to the plug connector.
9. Check the operation of the switch in each selector lever position. The starter should engage in only the neutral and park detent positions.

ECONOLINE AND BRONCO

1. Remove the downshift linkage rod return spring at the low-reverse servo cover.
2. Apply penetrating oil to the outer lever attaching nut to prevent breaking the inner lever shaft. Remove the transmission downshift outer lever attaching nut and lever.
3. Remove the two neutral start switch retaining bolts (Fig. 7).
4. Disconnect the two multiple wire connectors.
5. Remove the neutral start switch from the transmission.
6. Install the neutral start switch on the transmission. Install the two retaining bolts.
7. With the transmission manual lever in neutral, check the location of the switch with the gauge pin. Install

gauge pin (No. 43 drill) into the gauge pin holes (Fig. 7).
8. Torque the switch attaching bolts to specification and remove the gauge pin.
9. Install the outer downshift lever and retaining nut, and torque the nut to specification. Install the downshift linkage rod return spring between the lever and retaining clip on the low-reverse servo cover.
10. Connect the wire multiple connectors. The red connector has to be inserted into the red connector and the blue connector inserted into the blue connector. Check the operation of the switch in each detent position. The engine should start only with the transmission selector lever in N (neutral) and P (park).

P-350-400-500

1. Place the selector lever in neutral.
2. Disconnect the neutral start switch wires at the switch.
3. Remove the two neutral start switch-to-mounting bracket attaching screws and remove the switch.
4. Position the neutral start switch to the mounting bracket and loosely install the two attaching screws.
5. Move the switch lever to the neutral detent position (Fig. 8) and tighten the attaching screws to 35-50 in-lbs torque.
6. Connect the wires to the neutral start switch.
7. Check the operation of the switch in each selector lever position. The engine should start only with the transmission selector lever in neutral or park.

B-600-700 AND F-600

1. Disconnect the neutral start switch wires at the plug connector.
2. Remove the neutral start switch-to-mounting bracket attaching screws (Fig. 9).
3. Remove the cotter pin securing the neutral start switch to the selector lever arm and remove the switch.
4. Position the neutral start switch to the selector lever arm clevis pin and secure with the flat washer and cotter pin.
5. Install the neutral switch-to-mounting bracket attaching screws.
6. Connect the switch wires to the plug connector.
7. Position the switch so that the starter circuit is closed when the selector lever is in N and then, tighten the switch attaching screws.
8. Check the operation of the switch. The engine should start only with the selector lever in neutral.

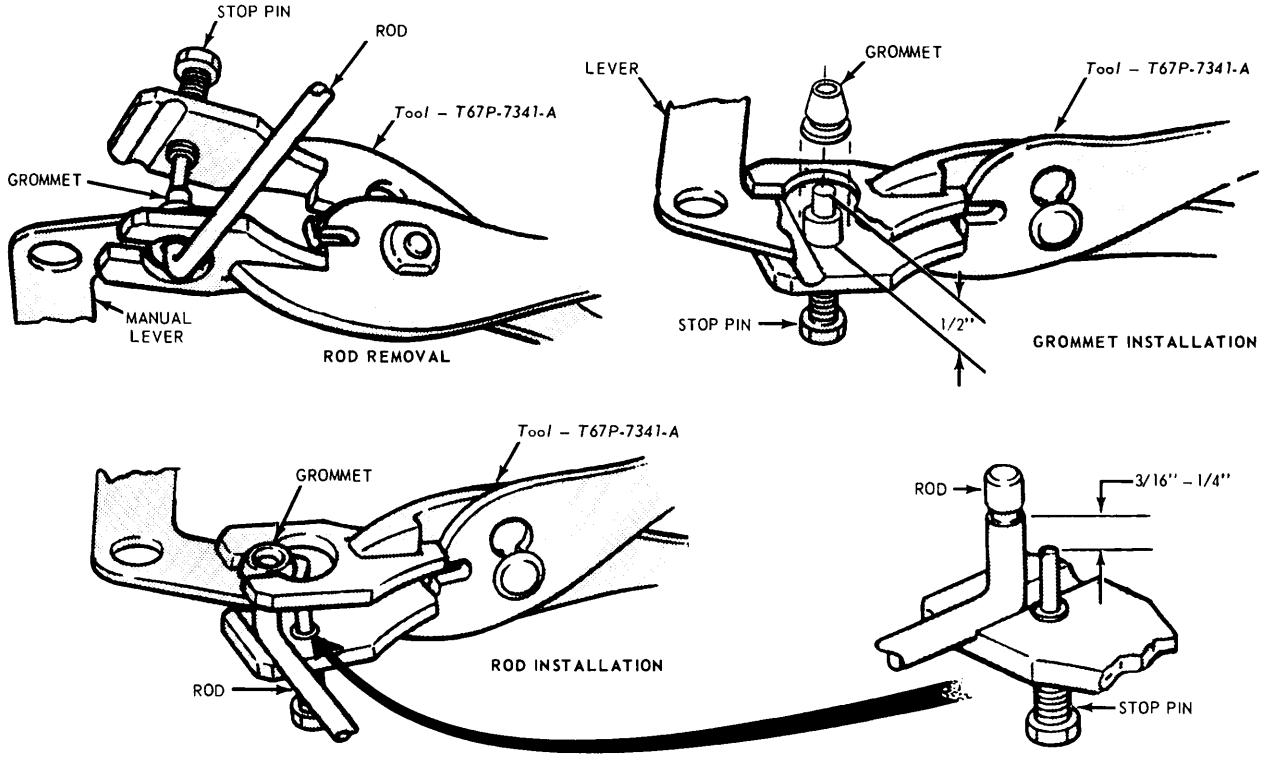

FIG. 10 Removing or Installing Shift Linkage Grommet

SPECIFICATIONS

TORQUE LIMITS

Item	Torque
Neutral Start Switch to column. –Except P-Series	13-17 In-Lbs
–P-Series	35-50 In-Lbs
Neutral Start Switch to case.	55-75 In-Lbs

SPECIAL SERVICE TOOLS

Ford Tool No.	Description
T67P-7341-A	Remover Replacer Trans. Shift Linkage Insulators.

CD2322-B

PART 17-05 C4 Automatic Transmission

Applies to Bronco, Econoline, F-100 and F-250 Only

COMPONENT INDEX	Page
ASSEMBLY OF TRANSMISSION	05-11
CONTROL VALVE BODY	
Cleaning and Inspection	01-10
Disassembly and Assembly	05-14
Removal and Installation	05-07
DESCRIPTION	05-01
DOWNSHIFT LINKAGE	
Disassembly and Assembly	05-16
EXTENSION HOUSING	
Cleaning and Inspection	01-10
Removal and Installation	05-08
EXTENSION HOUSING BUSHING	
Removal and Installation	05-08
EXTENSION HOUSING REAR SEAL	
Removal and Installation	05-08
FORWARD CLUTCH	
Cleaning and Inspection	01-11
Disassembly and Assembly	05-20
FORWARD CLUTCH HUB AND RING GEAR	
Disassembly and Assembly	05-21
FRONT PUMP	
Cleaning and Inspection	01-11
Disassembly and Assembly	05-18
GOVERNOR	
Cleaning and Inspection	01-10
Disassembly and Assembly	05-16
Removal and Installation	05-09

COMPONENT INDEX	Page
INTERMEDIATE BAND	
Adjustment	05-04
INTERMEDIATE SERVO	
Cleaning and Inspection	01-10
Disassembly and Assembly	05-16
Removal and Installation	05-07
INPUT SHELL AND SUN GEAR	
Disassembly and Assembly	05-21
LOW-REVERSE BAND	
Adjustment	05-04
LOW-REVERSE BRAKE DRUM BUSHING	
Removal and Installation	05-22
LOW-REVERSE SERVO	
Cleaning and Inspection	01-10
Disassembly and Assembly	05-16
Removal and Installation	05-08
MANUAL LINKAGE	
Disassembly and Assembly	05-16
REVERSE-HIGH CLUTCH	
Disassembly and Assembly	05-19
REVERSE RING GEAR AND HUB	
Disassembly and Assembly	05-22
SPECIFICATIONS	05-37
TRANSMISSION (COMPLETE)	
Disassembly and Assembly	05-10
Removal and Installation	05-04

DESCRIPTION

Figure 1 shows the location of the converter, front pump, clutches, gear train and most of the internal parts used in the C4 automatic transmission. The identification tag (Fig. 2) is located under the lower front intermediate servo cover bolt. The tag shows the model prefix and suffix, assembly part numbers, and the built date code. The first line on the tag shows the transmission model prefix and suffix. A number appearing after the suffix (Fig. 2) indicates that the internal parts in the transmission have been changed after initial production start-up. For example, a PEA-F model transmission that has been changed internally would read PEA-F1. Both transmissions are basically the same, but some service parts in the PEA-F1 transmission are slightly different than the PEA-F transmission. Therefore, it is important that the codes on the transmission identification tag be checked when ordering parts or making inquiries about the transmission.

The C4 automatic transmission is a three speed unit capable of providing automatic upshifts and downshifts through the three forward gear ratios, and also capable of providing manual selection of first and second gears.

The transmission consists

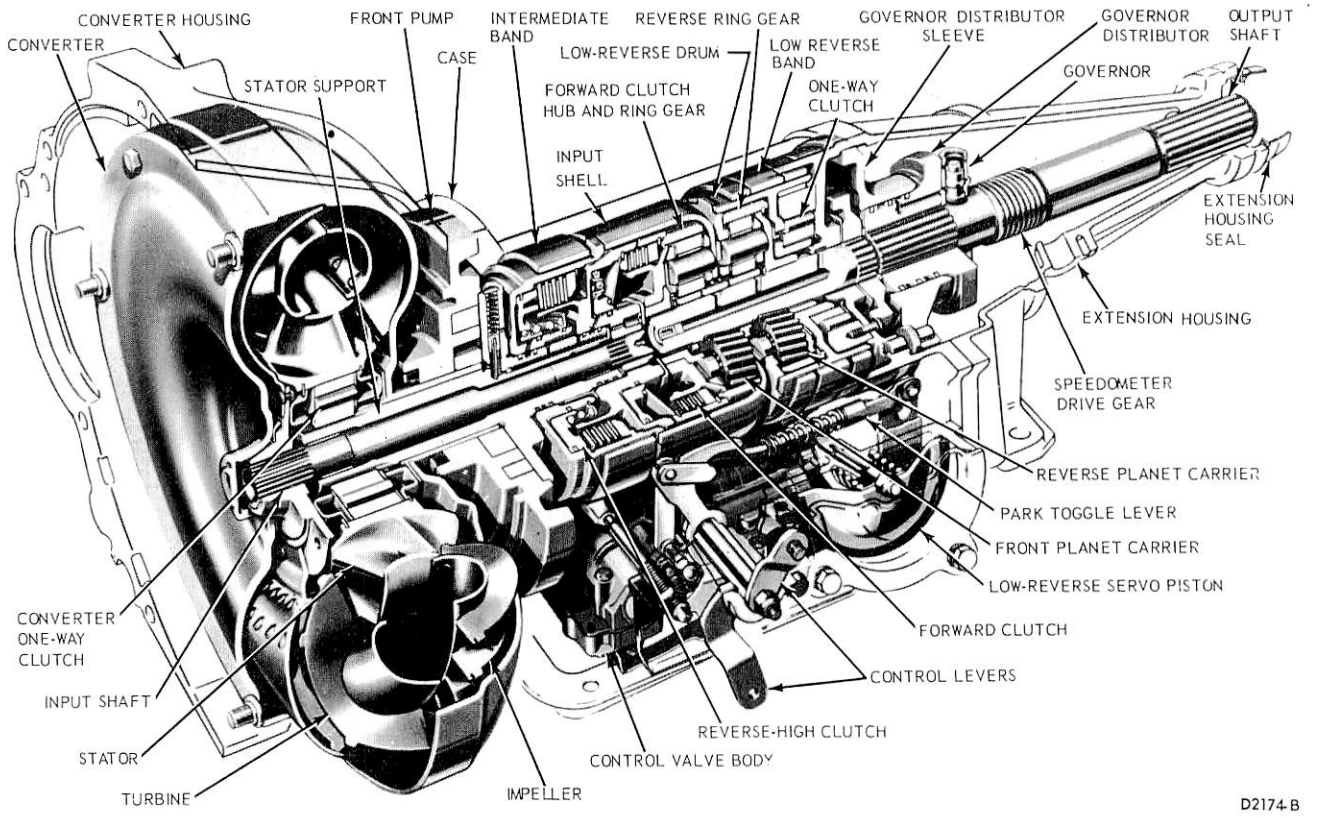

FIG. 1 C4 Automatic Transmission

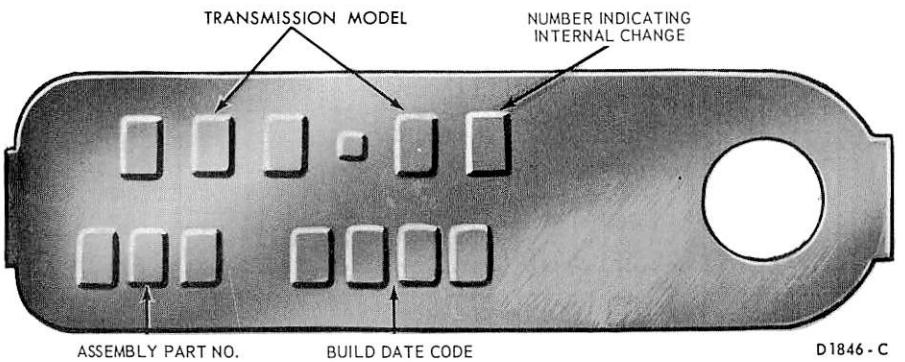

FIG. 2 Identification Tag

essentially of a torque converter, planetary gear train, two multiple disc clutches, a one-way clutch and a hydraulic control system (Fig. 3).

The only adjustments on the transmission are the intermediate and low-reverse bands.

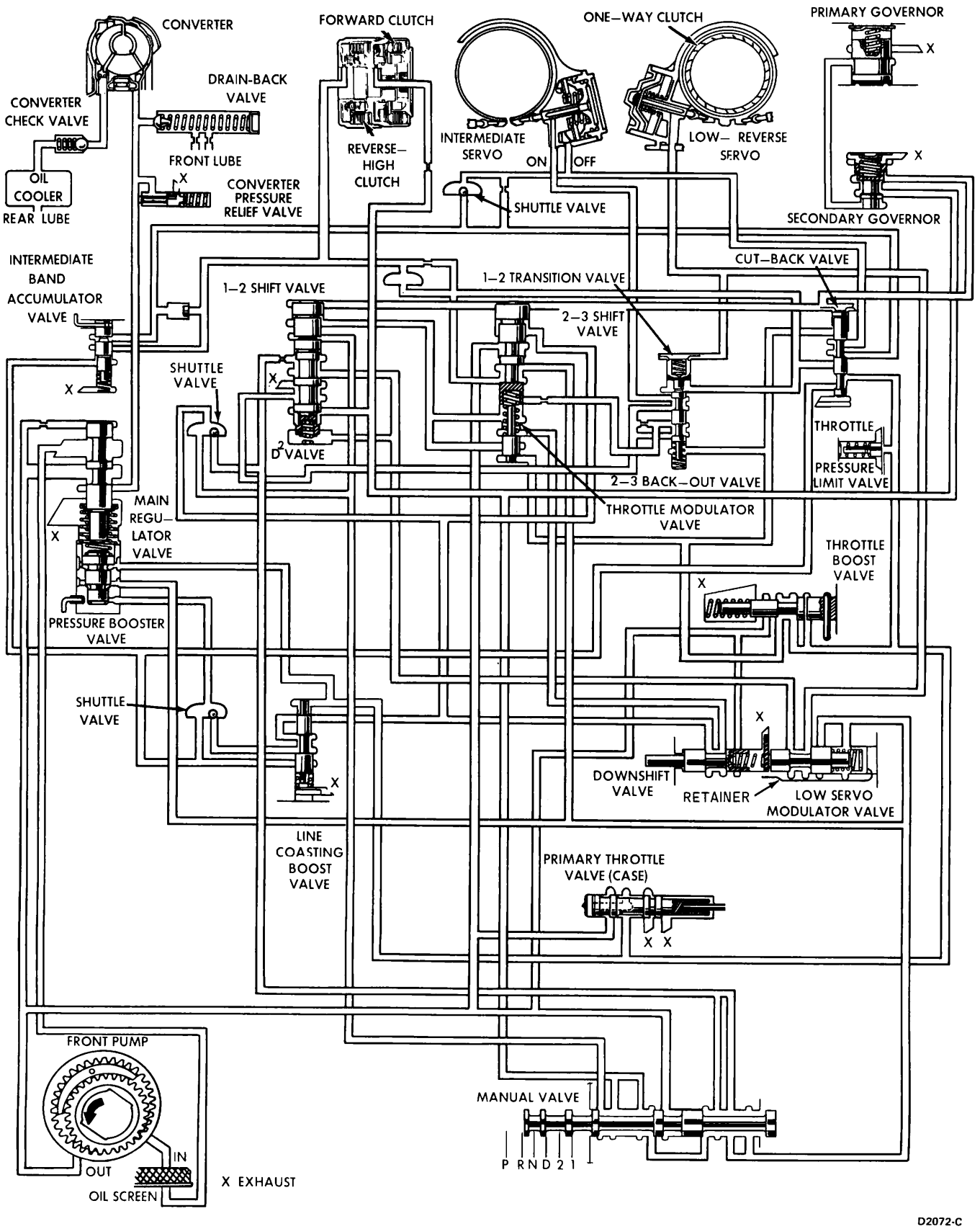

FIG. 3 Hydraulic Control System

ADJUSTMENTS

To prevent damage to the transmission and to assure proper band adjustment, it is essential that the tools and procedures described below are used whenever the bands are adjusted.

INTERMEDIATE BAND ADJUSTMENT

1. Clean all the dirt from the band adjusting screw area. Remove and discard the locknut.
2. Install a new locknut on the adjusting screw. With the tool shown in Fig. 4, tighten the adjusting screw until the tool handle clicks. The tool is a pre-set torque wrench which clicks and breaks when the torque on the adjusting screw reaches 10 ft-lbs.
3. **Back off the adjusting screw exactly 1 3/4 turns.**
4. Hold the adjusting screw from turning and torque the locknut to specification.

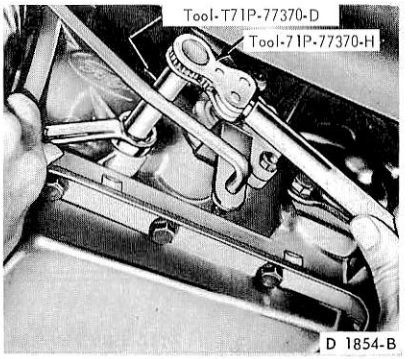

FIG. 4 Adjusting Intermediate Band

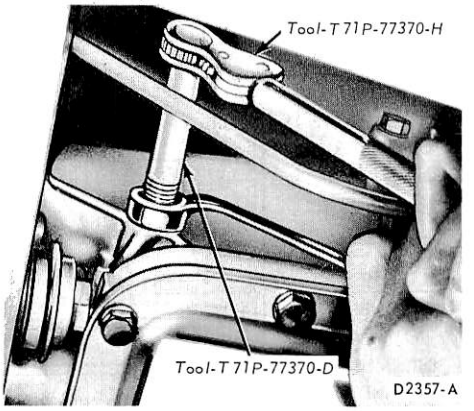

FIG. 5 Adjusting Low-Reverse Band

LOW-REVERSE BAND ADJUSTMENT

1. Clean all the dirt from the band adjusting screw area. Remove and discard the locknut.
2. Install a new locknut on the adjusting screw with the tools shown in Fig. 5 and tighten the adjusting screw until the tool handle clicks. The tool is a pre-set torque wrench which clicks and breaks when the torque on the adjusting screw reaches 10 ft-lbs.
3. **Back off the adjusting screw exactly 3 full turns.**
4. Hold the adjusting screw from turning and torque the locknut to specification.

REMOVAL AND INSTALLATION

TRANSMISSION

F-100-250

Removal

1. Raise the vehicle on a hoist.
2. Place the drain pan under the transmission fluid pan. Remove the fluid filler tube from the pan and drain the transmission fluid.
3. Remove the converter drain plug access cover from the lower end of the converter housing.
4. Remove the converter-to-flywheel attaching nuts. Place a wrench on the crankshaft pulley attaching bolt to turn the converter to gain access to the nuts.
5. With the wrench on the crankshaft pulley attaching bolt, turn the converter to gain access to the converter drain plug. Then, remove the plug (Fig. 6). Place a drain pan under the converter to catch the fluid. After the fluid has been drained from the converter, reinstall the plug.

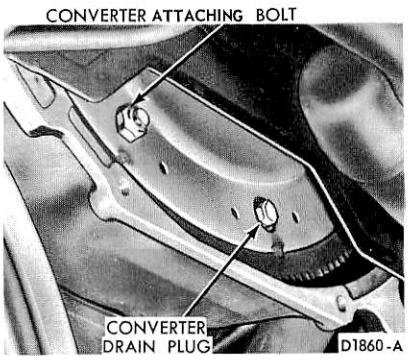

FIG. 6 Converter Drain Plug Location—Typical

6. Remove the drive shaft.
7. Disconnect the oil cooler lines from the transmission.
8. Disconnect the manual and downshift linkage rods from the transmission control levers.
9. Remove the speedometer gear from the extension housing.
10. Disconnect the starter cable. Remove the three starter to converter housing attaching bolts. Remove the starter.
11. Remove the vacuum line hoses from the transmission vacuum unit. Disconnect the vacuum lines from the retaining clip. Disconnect the transmission regulated spark (T.R.S.) switch wire (Fig. 7) at the transmission, if so equipped.
12. Position the transmission jack to support the transmission. Install the safety chain to hold the transmission on the jack.
13. Remove the two engine rear support crossmember-to-frame attaching bolts.
14. Remove the two engine rear support-to-extension housing attaching bolts.
15. Raise the transmission and remove the rear support. Remove the six converter housing-to-engine attaching bolts.
16. Move the transmission away from the engine. Lower the transmission

and remove it from under the vehicle.

Installation

1. Torque the converter drain plug to specification.
2. Position the converter to the transmission making sure the converter drive flats are fully engaged in the pump gear.
3. With the converter properly installed, place the transmission on the jack. Secure the transmission to the jack with the safety chain.
4. Rotate the converter so that the studs and drain plug are in alignment with their holes in the flywheel.
5. With the transmission mounted on the transmission jack, move the converter and transmission assembly forward into position, using care not to damage the flywheel and the converter pilot. **The converter must rest squarely against the flywheel. This indicates that the converter pilot is not binding in the engine crankshaft.**
6. Install the six converter housing-to-engine attaching bolts. Torque the bolts to specification.

Install the converter-to-flywheel attaching nuts. Torque the nuts to specification. Remove the safety chain from the transmission.

7. Install the rear support. Install the rear support-to-extension housing attaching bolts. Torque the bolts to specification.
8. Position the starter into the converter housing and install the three attaching bolts. Torque the bolts to specification. Install the starter cable.
9. Remove the transmission jack.
10. Connect the transmission filler tube to the transmission pan. Connect the oil cooler lines to the transmission.
11. Install the speedometer driven gear in the extension housing. Torque the attaching bolt to specification.
12. Connect the transmission linkage rods to the transmission control levers.
13. Install the drive shaft.
14. Install the vacuum lines in the retaining clip. Connect the vacuum lines to the diaphragm unit. Connect the transmission regulated spark (T.R.S.) switch wire (Fig. 7) to the switch, if so equipped.
15. At the front lower area of the converter housing, install the lower cover and the control lever dust shield. Install the attaching bolts. Torque the bolts to specification.

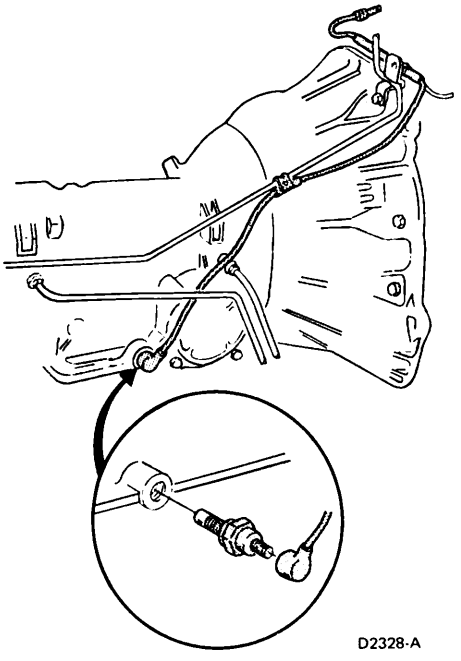

FIG. 7 Transmission Regulated Spark Switch Location

16. Secure the fluid filler tube to the pan. Tighten the fitting to specification.
17. Lower the vehicle.
18. Fill the transmission to the proper level with the specified fluid.
19. Raise the vehicle and check for transmission fluid leakage. Lower the vehicle and adjust the throttle and manual linkage.

ECONOLINE

Removal

1. Working from inside the vehicle, remove the engine compartment cover.
2. Disconnect the neutral start switch wires at the plug connector.
3. If the vehicle is equipped with a V8 engine, remove the flex hose from the air cleaner heat tube.
4. Remove the upper converter housing-to-engine attaching bolts (three bolts on 6-cylinder engines; four bolts on 8-cylinder engines).
5. On V8 engines, remove the upper muffler inlet pipe-to-exhaust manifold flange nut (right side of engine).
6. Raise the vehicle on a hoist.
7. On V8 engines, remove the three remaining muffler inlet pipe-to-exhaust manifold flange nuts and allow the exhaust pipe to hang.
8. Place the drain pan under the transmission fluid pan. Remove the fluid filler tube from the pan and drain the transmission fluid.
9. Remove the converter drain plug access cover from the lower end of the converter housing.
10. Remove the converter-to-flywheel attaching nuts. Place a wrench on the crankshaft pulley attaching bolt to turn the converter to gain access to the nuts.
11. With the wrench on the crankshaft pulley attaching bolt, turn the converter to gain access to the converter drain plug. Then, remove the plug (Fig. 6). Place a drain pan under the converter to catch the fluid. After the fluid has been drained from the converter, reinstall the plug.
12. Disconnect the drive shaft.
13. Remove the bolt retaining the fluid filler tube to the engine and remove the tube.
14. Disconnect the starter cable at the starter. Remove the starter-to-converter housing attaching bolts and remove the starter.
15. Position the engine support bar (Tool T65E-6000-J) to the side rail and engine oil pan flanges.
16. Disconnect the cooler lines from the transmission. Disconnect the vacuum lines from the vacuum diaphragm unit. Disconnect the transmission regulated spark (T.R.S.) switch wire (Fig. 7) at the transmission, if so equipped.
17. Remove the speedometer driven gear from the extension housing.
18. Disconnect the manual and downshift linkage rods from the transmission control levers.
19. Position a transmission jack to support the transmission. Install the safety chain to hold the transmission on the jack.
20. Remove the bolt and nut securing the rear mount to the crossmember. Remove the four bolts retaining the crossmember to the side rails. Then, with the transmission jack, raise the transmission and remove the crossmember.
21. Remove the remaining converter housing-to-engine attaching bolts. Lower the transmission and remove it from under the vehicle.

Installation

1. Torque the converter drain plug to specification.
2. Position the converter to the transmission making sure the converter drive flats are fully engaged in the pump gear.
3. With the converter properly

installed, place the transmission on the jack. Secure the transmission to the jack with the safety chain.
4. Rotate the converter so that the studs and drain plug are in alignment with their holes in the flywheel.
5. With the transmission mounted on the transmission jack, move the converter and transmission assembly forward into position, using care not to damage the flywheel and the converter pilot. **The converter must rest squarely against the flywheel. This indicates that the converter pilot is not binding in the engine crankshaft.**
6. Install the lower converter housing-to-engine attaching bolts. Torque the bolts to specification. Install the converter-to-flywheel attaching nuts. Torque the nuts to specification.
7. Install the crossmember. Install the rear mount-to-crossmember attaching bolt and nut. Torque the bolts to specifications.
8. Remove the safety chain and remove the jack from under the vehicle. Remove the engine support bar.
9. Connect the cooler lines to the transmission. Connect the vacuum lines to the vacuum diaphragm unit. Connect the transmission regulated spark (T.R.S.) switch wire (Fig. 7) to the switch, if so equipped.
10. Install the speedometer driven gear into the extension housing. Torque the attaching bolt to specification.
11. Connect the transmission linkage rods to the transmission control levers.
12. Connect the transmission filler tube to the transmission pan. Secure the tube to the engine with the attaching bolt.
13. Install the converter housing cover and torque the attaching bolts to specification.
14. Position the starter into the converter housing and install the attaching bolts. Torque the bolts to specification. Install the starter cable.
15. Install the drive shaft.
16. If equipped with a V8 engine, install the muffler inlet pipe on the exhaust manifolds and install and torque the three retaining nuts.
17. Lower the vehicle.
18. On V8 engines, install and torque the upper muffler inlet pipe-to-exhaust manifold flange nut.
19. Install the upper converter housing-to-engine attaching bolts. Torque the bolts to specification.
20. On V8 engines, install the flex hose to the air cleaner heat tube.
21. Connect the neutral start switch wires at the plug connector.
22. Fill the transmission to the proper level with the specified fluid.
23. Raise the vehicle and check for transmission fluid leakage. Lower the vehicle and adjust the throttle and manual linkage.
24. Install the engine compartment cover.

BRONCO

Removal
1. Working from the engine compartment, remove the four screws retaining the fan shroud to the radiator.
2. Raise the vehicle on a hoist.
3. Remove the transfer case shield if so equipped.
4. Place a drain pan under the transmission fluid pan. Remove the fluid filler tube from the pan and drain the transmission fluid.
5. Drain the transfer case.
6. Remove the converter drain plug access cover from the lower end of the converter housing.
7. Remove the converter-to-flywheel attaching nuts. Place a wrench on the crankshaft pulley attaching bolt to turn the converter to gain access to the nuts.
8. With the wrench on the crankshaft pulley attaching bolt, turn the converter to gain access to the converter drain plug. Then, remove the plug. Place a drain pan under the converter to catch the fluid. After the fluid has been drained from the converter, reinstall the plug.
9. Disconnect the rear drive shaft at the transfer case and position it out of the way.
10. Disconnect both ends of the front driveshaft and remove it from the vehicle.
11. Disconnect the complete exhaust system and position it out of the way.
12. Remove the speedometer gear from the transfer case.
13. Disconnect the oil cooler lines from the transmission.
14. Disconnect the manual and downshift linkage rods from the transmission control levers.
15. Disconnect the neutral start switch wires from the retaining clamps and connectors.
16. Disconnect the starter cable. Remove the three starter-to-converter housing attaching bolts. Remove the starter.
17. Remove the vacuum hoses from the transmission vacuum unit. Disconnect the vacuum lines from the retaining clip.
18. Remove the bolts, washers, plates and insulators that secure the crossmember to the transfer case adapter.
19. Remove the crossmember-to-frame side support attaching bolts.
20. Position a transmission jack to support the transmission and transfer case.
21. Raise the transmission and transfer case assembly and remove the four bolts securing the left side support bracket to the frame. Remove the side support bracket, crossmember and upper crossmember insulators from the vehicle.
22. Raise the transmission and transfer case slightly and disconnect the shift rod from the transfer case shift lever bracket.
23. Remove the bolts that attach the shift lever bracket to the transfer case adapter and allow the assembly to hang by the shift lever.
24. Secure the transmission and transfer case assembly to a transmission jack and remove the six converter housing-to-engine attaching bolts.
25. Move the transmission and transfer case away from the engine. Lower the assembly and remove it from under the vehicle.
26. Move the assembly to a bench and remove the transfer case adapter-to-transmission attaching bolts.
27. Slide the transmission off the transfer case.

Installation
1. Position the transfer case to the transmission and install the attaching bolts. Torque the bolts to specification.
2. Torque the converter drain plug to specification.
3. Position the converter to the transmission making sure the converter drive flats are fully engaged in the pump gear.
4. With the converter properly installed, position the transmission and transfer case assembly on a transmission jack and secure the assembly in place.
5. Rotate the converter so that the studs and drain plug are in alignment with their holes in the flywheel.
6. With the transmission and transfer case mounted on a transmission jack, move the assembly forward into position, using care not to damage the flywheel and the converter pilot. **The converter must rest squarely against the flywheel. This indicates that the converter pilot is not binding in the engine crankshaft.**
7. Install the six converter housing-to-

engine attaching bolts. Torque the bolts to specification.
8. Position the shift lever bracket to the transfer case adapter and install the attaching bolts.
9. Connect the shift rod to the shift lever bracket and secure with the spring washer, flat washer and cotter pin.
10. Raise the transmission and transfer case high enough to provide clearance for installing the crossmember. Position the left side support bracket to the frame and install the four attaching bolts. Place the upper insulators to the crossmember and install the crossmember. Install the crossmember-to-frame side support attaching bolts.
11. Align the bolt holes in the transfer case adapter with those in the crossmember, then lower the transmission and remove the jack.
12. Install the crossmember-to-transfer case adapter bolts, insulators, plates and washers.
13. Install the flywheel-to-converter attaching nuts. Torque the nuts to specification.
14. Position the starter in the converter housing and install the three attaching bolts. Torque the bolts to specification. Install the starter cable.
15. Connect the transmission filler tube to the transmission pan. Connect the oil cooler lines to the transmission.
16. Install the vacuum lines in the retaining clip. Connect the vacuum hoses to the vacuum unit.
17. Install the speedometer gear in the transfer case.
18. Connect the neutral start switch wires to their respective connectors and secure the harness in the retaining clamps.
19. Connect the transmission linkage rods to the transmission control levers.
20. Install the exhaust system.
21. Install the rear axle driveshaft to the transfer case and torque the attaching bolts to specification.
22. Position the front driveshaft to the front axle and transfer case and install attaching bolts. Torque the bolts to specification.
23. Install the converter drain plug access cover and secure it with the attaching bolts.
24. Fill the transfer case to the proper level with the recommended lubricant.
25. Install the transfer case shield if so equipped.
26. Lower the vehicle.

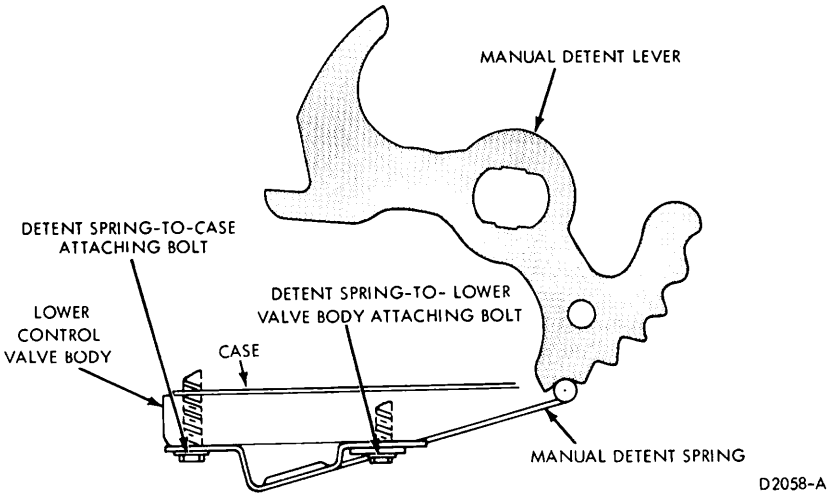

FIG. 8 Control Valve Body Detent Spring Installed

27. Position the fan shroud to the radiator and secure with the four retaining screws.
28. Fill the transmission to the proper level with the specified fluid. Adjust the manual and downshift linkage as required.

CONTROL VALVE BODY

1. Raise the vehicle so the transmission oil pan is accessible.
2. Disconnect the fluid filler tube from the pan and allow the fluid to drain into a container.

If the same fluid is to be used again, filter the fluid through a 100 mesh screen. Reuse the fluid only if it is in good condition.

3. Remove the transmission fluid pan attaching bolts, pan and gasket.
4. Shift the transmission manual lever to the P position and remove the two bolts that attach the detent spring to the valve body and case (Fig. 8).
5. Remove the remaining valve body-to-case attaching bolts. Hold the manual valve to keep it from sliding out of the valve body and remove the valve body from the case. Failure to hold the manual valve while removing the control assembly, could cause the manual valve to become bent or damaged.
6. Refer to Disassembly and Assembly in this Part for the control valve body repair operations.
7. Thoroughly clean and remove all gasket material from the pan and pan mounting face of the case. Remove and discard the nylon shipping plug from the oil pan filler tube hole. This plug is used to retain transmission fluid within the transmission during shipment and should be discarded when the oil pan is removed.
8. Shift the manual lever at the transmission into the P detent position. Install the valve body to the case. Position the inner downshift lever between the downshift lever stop and the downshift valve. Make sure the two lands on the end of the manual valve engage the actuating pin on the manual detent lever. Install seven valve body-to-case bolts. Do not tighten the bolts at this time.
9. Position the detent spring to the lower valve body and install the spring-to-case bolt finger tight (Fig. 8).
10. Hold the detent spring roller in the center of the manual detent lever and install the detent spring-to-lower valve body bolt (Fig. 8). Tighten the bolt to 80-120 in-lbs torque.
11. Tighten all the control valve body-to-case attaching bolts to 80-120 in-lbs torque.
12. Place a new gasket on the pan. Install the pan and attaching bolts. Torque the bolts to specification.
13. Connect the filler tube to the pan and tighten the fitting securely.
14. Lower the vehicle and fill the transmission with fluid. Check the transmission pan area for fluid leakage.

INTERMEDIATE SERVO

1. Raise the vehicle and remove the transmission forward cooler line. Remove the four servo cover-to-case attaching bolts. Remove the identification tag.
2. Remove the vacuum lines at the

transmission. Remove the servo cover, gasket, piston, and piston return spring. Remove the piston from the cover (Fig. 53).
3. Remove the piston seals and cover gasket.
4. Install new piston seals on the piston. Lubricate the piston seals with clean transmission fluid. Install the servo piston in the cover.
5. Install the piston return spring in the case. Place a new gasket on the cover. Install the piston and cover into the transmission case.
6. Use two 5/16-18 x 1 1/4 bolts, 180 degrees apart to position the cover against the case.
7. Install the transmission identification tag. Install the two servo cover attaching bolts. Remove the two 1 1/4 inch bolts and install two attaching bolts. Torque the bolts to specification.
8. Install the vacuum and oil cooler lines.
9. Adjust the intermediate band. Lower the vehicle and check the transmission fluid level.
10. If the band can not be adjusted properly, the struts are not in position. Remove the pan and valve body. Install the struts, valve body, pan, and adjust the band. Refill the transmission with fluid.

LOW-REVERSE SERVO

1. Raise the vehicle on a hoist.
2. Loosen the reverse band adjusting screw locknut. Tighten the reverse band adjusting screw to 10 ft-lbs torque. (Tightening the screw will insure that the band strut will be held against the case by the band, preventing it from falling down when the reverse servo piston assembly is removed).
3. Remove the four servo cover-to-case attaching bolts. Remove the vent tube retaining clip. Remove the servo cover and seal from the case.
4. Remove the servo piston from the case (Fig. 55).**The piston seal cannot be replaced, without replacing the piston. The seal is bonded to the piston.**
5. Install the piston into the case. Install a new seal on the cover. Install the cover by using two 5/16-18 bolts, 1 1/4 inch long, at 180 degrees apart to position the servo cover on the case. Install the vent tube retaining clip. Install two cover attaching bolts. Remove the two installing bolts and install the last two attaching bolts. Torque the cover-to-case attaching bolts to specification.

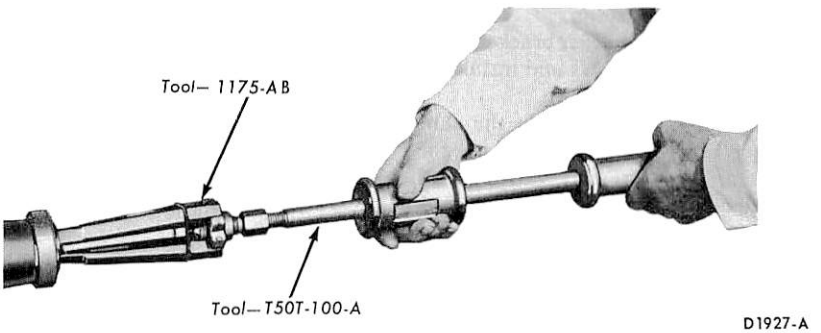

FIG. 9 Removing Extension Housing Seal—F-100-250 and Econoline

6. Adjust the low-reverse band. Lower the vehicle and check the transmission fluid level.
7. If the band can not be adjusted properly, the struts are not in position. Remove the fluid pan and valve body. Install the struts, valve body, pan, and adjust the band. Refill the transmission with fluid.

EXTENSION HOUSING BUSHING AND REAR SEAL

F-100-250 AND ECONOLINE

1. Raise the vehicle and disconnect the drive shaft from the transmission.
2. When only the rear seal needs replacing, carefully remove it with a tapered chisel or the tools shown in Fig. 9. Remove the bushing as shown in Fig. 10.**Use the bushing remover carefully so that the spline seal is not damaged.**
3. When installing a new bushing use the special tool shown in Fig. 11.
4. Before installing a new seal, inspect the sealing surface of the universal joint yoke for scores. If scores are found, replace the yoke.
5. Inspect the counterbore of the housing for burrs and remove with crocus cloth.
6. Install the seal into the housing with the tool shown in Fig. 12. The seal should be firmly seated in the bore. Coat the inside diameter of the fiber portion of the seal with C1AZ-19590-B lubricant.
7. Coat the front universal joint spline with C1AZ-19590-B lubricant and install the drive shaft.

EXTENSION HOUSING

F-100-250 AND ECONOLINE

1. Raise the vehicle on the hoist.
2. Remove the drive shaft. Position the transmission jack to support the transmission.

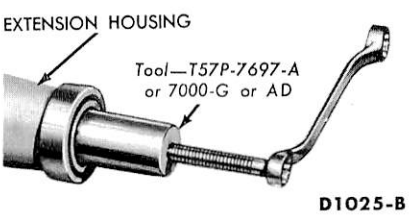

FIG. 10 Removing Extension Housing Bushing—F-100-250 and Econoline

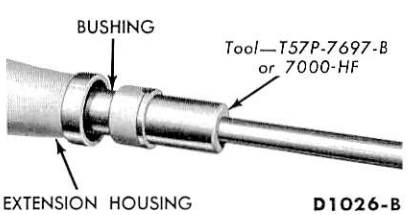

FIG. 11 Installing Extension Housing Bushing—F-100-250 and Econoline

3. Remove the speedometer cable from the extension housing.
4. Remove the crossmember-to-extension housing bolts.
5. Lower the transmission until the extension housing mount clears the body area.
6. Loosen the extension housing attaching bolts to drain the transmission fluid.
7. Remove the six extension housing-to-case attaching bolts and remove the extension housing and gasket.
8. Install a new extension housing gasket on the case. Install the extension housing and six attaching bolts. Torque the bolts to specification.
9. Raise the transmission and install the extension housing-to-crossmember mounting bolts. Torque the bolts to specifications. Remove the transmission jack.
10. Install the speedometer cable in the extension housing. Install the drive shaft.

11. Lower the vehicle and fill the transmission with fluid.
12. Check the extension housing area for fluid leakage.

GOVERNOR

F-100-250 AND ECONOLINE

1. Remove the extension housing as outlined in this section of the manual.
2. Remove the governor housing to governor distributor attaching bolts (Fig. 13). Remove the governor housing from the distributor.
3. Refer to Disassembly and Assembly in this Part for governor repair operations.
4. Install the governor housing on the governor distributor (Fig. 13). Install the attaching bolts and torque the bolts to specification.
5. Reinstall the extension housing.

BRONCO

Removal

1. Working from the engine compartment, remove the four screws retaining the fan shroud to the radiator.
2. Raise the vehicle on a hoist.
3. Remove the transfer case shield if so equipped.
4. Place a drain pan under the transfer case. Remove the drain plug from the transfer case and drain the lubricant.
5. Disconnect the front and rear driveshaft at the transfer case and position them out of the way.
6. Remove the speedometer gear from the transfer case.
7. Disconnect the shift rod from the transfer case shift lever bracket.
8. Remove the bolts, washers, plates and insulators that secure the crossmember to the transfer case adapter.
9. Remove the crossmember-to-frame side support attaching bolts.
10. Position a transmission jack to support the transmission and transfer case.
11. Raise the transmission and transfer case assembly and remove the four bolts securing the left side support bracket to the frame. Remove the side support bracket, crossmember and upper crossmember insulators from the vehicle.
12. Remove the bolts that attach the shift lever bracket to the transfer case adapter and allow the assembly to hang by the shift lever.

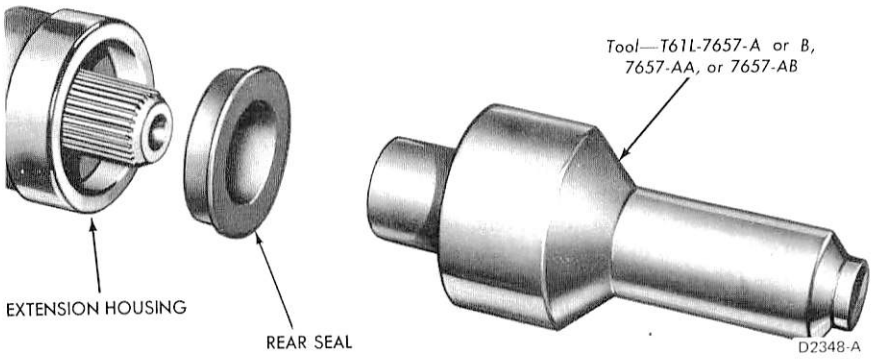

FIG. 12 Installing Extension Housing Seal—F-100-250 and Econoline

13. Secure the transfer case to a transmission jack and remove the six transmission-to-transfer case attaching bolts.
14. Move the transfer case and jack rearward until it clears the transmission output shaft. Lower the transfer case and remove it from under the vehicle.
15. Remove the governor housing-to-governor distributor attaching bolts (Fig. 13). Remove the governor housing from the distributor.
16. Refer to Disassembly and Assembly in this Part for governor repair operations.

Installation

1. Install the governor housing on the governor distributor (Fig. 13). Install and torque the attaching bolts to specification.
2. Clean the mounting surfaces on the transmission and transfer case. Position a new gasket on the transmission.
3. Position the transfer case to the transmission and install the attaching bolts. Torque the bolts to specification.
4. Position the shift lever bracket to the transfer case adapter and install the attaching bolts.
5. Raise the transmission and transfer case high enough to provide clearance for installing the crossmember. Position the left side support bracket to the frame and install the four attaching bolts. Place the upper insulators to the crossmember and install the crossmember. Install the crossmember-to-frame side support attaching bolts.
6. Align the bolt holes in the transfer case adapter with those in the crossmember, then lower the transmission and remove the jack.

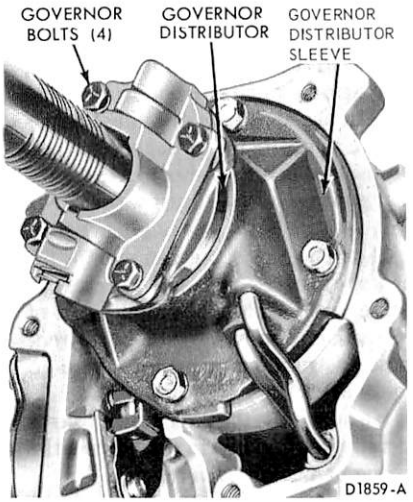

FIG. 13 Governor Installed

7. Install the crossmember-to-transfer case adapter bolts, insulators, plates and washers.
8. Connect the shift rod to the shift lever bracket and secure with the spring washer, flat washer, and cotter pin.
9. Install the speedometer gear in the transfer case.
10. Install the front and rear driveshafts to the transfer case.
11. Fill the transfer case to the proper level with the recommended lubricant.
12. Install the transfer case shield if so equipped.
13. Lower the vehicle.
14. Position the fan shroud to the radiator and secure with the four retaining screws.

DISASSEMBLY AND ASSEMBLY

TRANSMISSION

Before removing any of the subassemblies, thoroughly clean the outside of the transmission to prevent dirt from entering the mechanical parts. During the repair operation, refer to Part 17-01 for cleaning and inspection procedures.

During the transmission disassembly or assembly operations, ten thrust washers located between the subassemblies must be removed and installed. It is important that each thrust washer be in the correct position during the assembly operation. To properly locate and identify the thrust washers, the various positions of the thrust washers are shown in the illustrations and are numbered 1 through 10. No. 1 is at the first thrust washer located at the front pump. The last thrust washer, No. 10, is located at the parking pawl gear.

During the repair of the subassemblies, certain general instructions which apply to all units of the transmission must be followed. These instructions are given here to avoid unnecessary repetition.

Handle all transmission parts carefully to avoid nicking or burring the bearing or mating surfaces.

Lubricate all internal parts of the transmission before assembly with clean automatic transmission fluid. **Do not use any other lubricants except on gaskets and thrust washers which may be coated with vaseline to facilitate assembly.** Always install new gaskets when assembling the transmission.

Tighten all bolts and screws to the recommended torque as outlined in the Specification Section.

Disassembly

1. Remove the converter from the transmission front pump and converter housing.

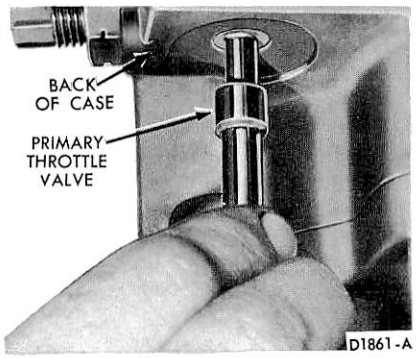

FIG. 14 Removing or Installing Primary Throttle Valve

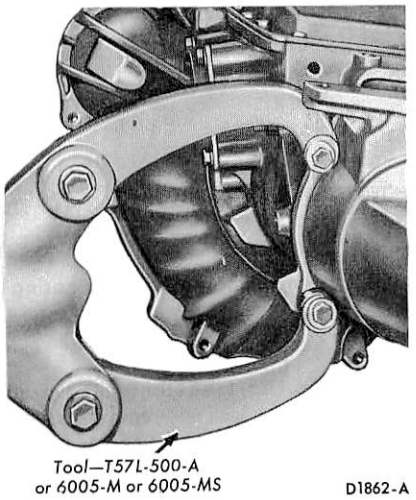

FIG. 15 Transmission Mounted in Holding fixture

2. Remove the transmission vacuum unit.

   Remove the vacuum unit control rod.
3. Remove the primary throttle valve (Fig. 14), from the opening at the rear of the case.
4. Remove the two extension housing-to-case bolts shown in Fig. 15 and mount the transmission in the holding fixture.

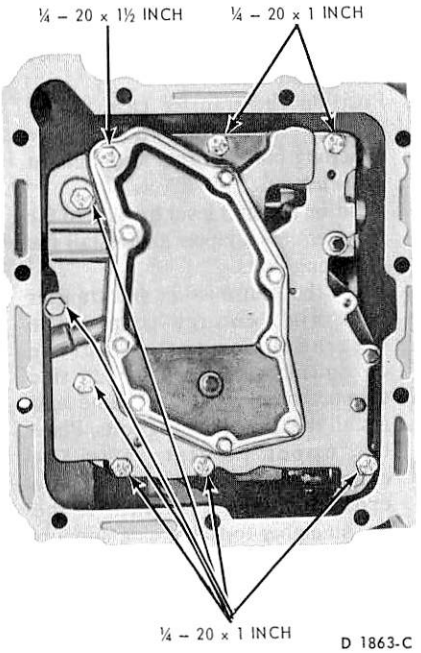

FIG. 16 Control Valve Body-To-Case Attaching bolts—Typical

5. Remove the transmission pan attaching bolts, pan and gasket.
6. Remove the control valve body attaching bolts (Fig. 16). Remove the control valve body from the case.
7. Loosen the intermediate band adjusting screw (Fig. 17) and remove the intermediate band struts from the case. Loosen the low-reverse band adjusting screw and remove the low-reverse band struts.

Transmission End Play Check

1. To keep the output shaft in alignment during the end play check, install the extension housing oil seal replacer tool or a front universal joint yoke in the extension housing.
2. Remove one of the converter housing-to-case attaching bolts and mount the dial indicator as shown in Fig. 18.
3. **The input shaft is a loose part and has to be properly engaged with the spline of the forward clutch hub during the end play checking procedure.** Move the input shaft and gear train toward the rear of the transmission case.
4. With the dial indicator contacting the end of the input shaft, set the indicator at zero (Fig. 18).
5. Insert a screwdriver behind the input shell (Fig. 18). Move the input shell and the front part of the gear train forward.
6. Record the dial indicator reading. The end play should be 0.008 to 0.042 inch. If the end play is not within specification, the selective thrust washers (Fig. 19) must be

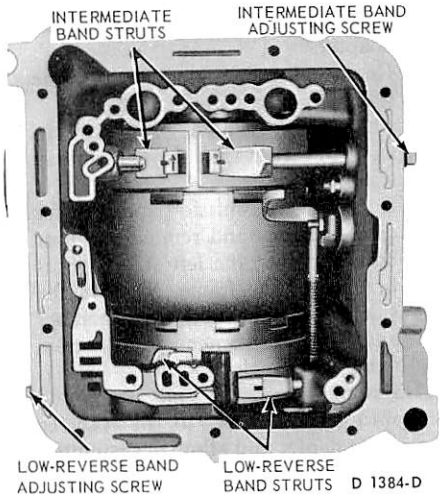

FIG. 17 Band Adjusting Screws and Struts—Typical

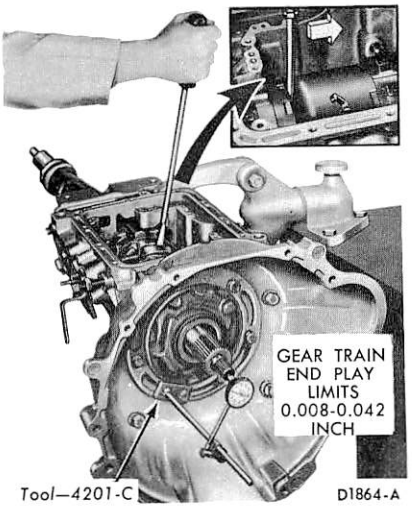

FIG. 18 Checking End Play

SELECTIVE THRUST WASHERS
(FOR END-PLAY CORRECTION)

THRUST WASHER NO. 1		THRUST WASHER NO. 2	
0.053-0.0575	Red	No. Stamped Washer	Metal Thrust Washer
0.070-0.074	Green		
0.087-0.091	Natural	1	0.043-0.041
0.104-0.108	Black	2	0.058-0.056
0.121-0.125	Yellow	3	0.075-0.073
		SPACER (This is a selective spacer used with washer 2 or 3. When used, install next to stator support.)	0.036-0.032

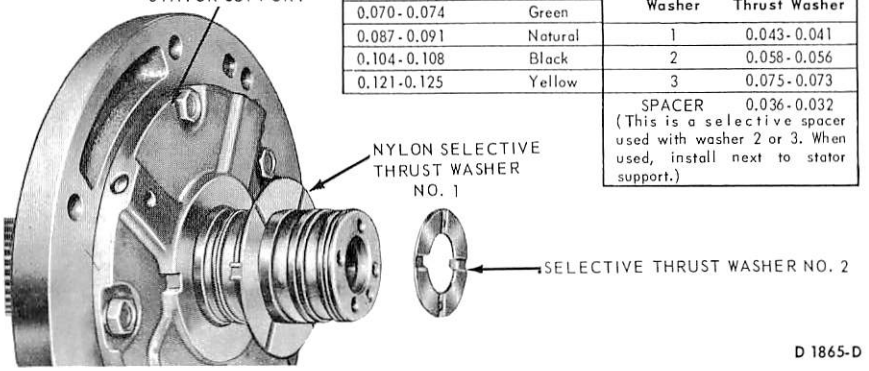

FIG. 19 Selective Thrust Washer Locations

replaced as required. The selective thrust washers can be replaced individually to obtain the specified end play.

7. Remove the dial indicator and remove the input shaft from the front pump stator support (Fig. 20).

Removal of Case and extension Housing Parts

1. Rotate the holding fixture to put the transmission in a vertical position with the converter housing up.
2. Remove the converter housing-to-case attaching bolts (Fig. 20). Remove the converter housing from the transmission case.
3. Remove the seven front pump attaching bolts. Remove the front pump by inserting a screwdriver behind the input shell (Fig. 21). Move the input shell forward until the front pump seal is above the edge of the case.
4. Remove the front pump and gasket from the case. If the selective thrust washer No. 1 did not come out with the front pump, remove it from the top of the reverse-high clutch.
5. Remove the intermediate and low-reverse band adjusting screws from the case. Rotate the intermediate band to align the band ends with the clearance hole in the case (Fig. 22). Remove the intermediate band from the case. **If the intermediate band is to be re-used, it must not be cleaned in a vapor degreaser or with a detergent solution. Wipe it clean with a lint-free cloth.**
6. Using a screwdriver between the input shell and rear planet carrier (Fig. 23), lift the input shell upward and remove the forward part of the gear train as an assembly (Fig. 24).
7. Place the forward part of the gear train in the holding fixture shown in Fig. 25.
8. With the gear train in the holding fixture, remove the reverse-high clutch and drum from the forward clutch (Fig. 26).
9. If thrust washer No. 2 (Fig. 19) did not come out with the front pump, remove the thrust washer from the forward clutch cylinder. If a selective spacer was used, remove the spacer. Remove the forward clutch from the forward clutch hub and ring gear (Fig. 26).
10. If thrust washer No. 3 (Fig. 26) did not come out with the forward clutch, remove the thrust washer from the forward clutch hub.
11. Remove the forward clutch hub and ring gear from the front planet carrier (Fig. 26).
12. Remove thrust washer No. 4 and the front planet carrier from the input shell.
13. Remove the input shell, sun gear and thrust washer No. 5 from the holding fixture.
14. From inside the transmission case (Fig. 24) remove thrust washer No. 6 from the top of the reverse planet carrier.
15. Remove the reverse planet carrier and thrust washer No. 7 from the reverse ring gear and hub (Fig. 27).

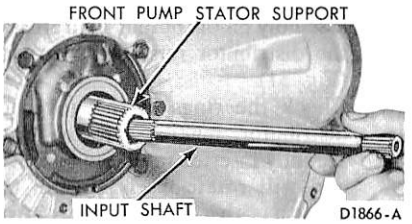

FIG. 20 Removing or Installing Input Shaft

16. Move the output shaft forward and with the tool shown in Fig. 28 remove the reverse ring gear hub-to-output shaft retaining ring.
17. Remove the reverse ring gear and hub from the output shaft. Remove thrust washer No. 8 from the low and reverse drum.
18. Remove the low-reverse band from the case (Fig. 29).
19. Remove the low-reverse drum from the one-way clutch inner race (Fig. 27).
20. Remove the one-way clutch inner race by rotating the race clockwise as it is removed.
21. Remove the 12 one-way clutch rollers, springs and the spring retainer from the outer race (Fig. 26). **Do not lose or damage any of the 12 springs or rollers. The outer race of the one-way clutch cannot be removed from the case until the extension housing, output shaft and governor distributor sleeve are removed.**

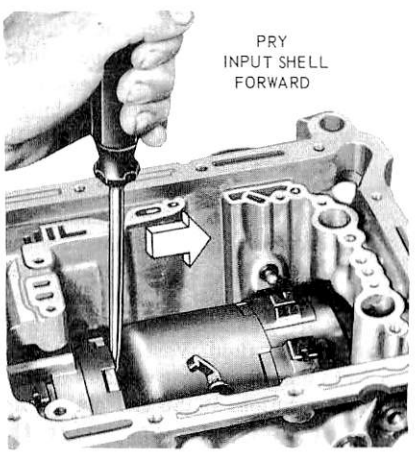

FIG. 21 Removing Front Pump



FIG. 22 Position of Intermediate Band for Removal or Installation

22. Remove the transmission from the holding fixture. Position the transmission on the bench in a vertical position with the extension housing up. Remove the four extension housing-to-case attaching bolts. Remove the extension housing and gasket from the case.
23. Pull outward on the output shaft and remove the output shaft and governor distributor assembly from the governor distributor sleeve (Fig. 30).
24. Remove the governor distributor lock ring from the output shaft (Fig. 31). Remove the governor distributor from the output shaft.
25. Remove the four distributor sleeve-to-case attaching bolts. Remove the distributor sleeve from the case. **Do not bend or distort the oil tubes as the tubes are removed from the case with the distributor sleeve.**
26. Remove the parking pawl return spring, pawl, and pawl retaining pin from the case (Fig. 32).
27. Remove the parking gear and thrust washer No. 10 from the case.
28. Remove the six one-way clutch outer race-to-case attaching bolts with the tool shown in Fig. 33. As the bolts are removed, hold the outer race located inside the case in position. Remove the outer race and thrust washer No. 9 from the case (Fig. 27).
29. Do not remove the T.R.S. switch from the case, if so equipped, unless the switch requires replacement.
30. If the transmission case bushing is worn or damaged, replace it with the tools shown in Figure 34.

Assembly

When assembling the transmission subassemblies (Fig. 35), make sure that the correct thrust washer is used between certain subassemblies. Lubricate remaining surfaces with transmission fluid. Vaseline should be used to hold the thrust washers in their proper location. If the end play is not within specifications after the transmission is assembled, either the wrong selective thrust washers were used, or a thrust washer came out of position during the transmission assembly operation.

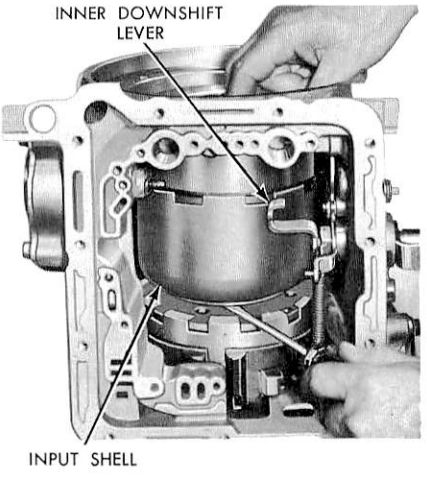

FIG. 23 Lifting Input Shell and Gear Train

1. Install thrust washer No. 9 inside the transmission case (Fig. 36).
2. Place the one-way clutch outer race inside the case. From the back of the case install the six outer race-to-case attaching bolts. Torque the bolts to specification with the tools shown in Fig. 37.
3. Place the transmission case in a vertical position with the back face of the case upward. Install the parking pawl retaining pin in the case (Fig. 38).
4. Install the parking pawl on the case retaining pin. Install the parking pawl return spring as shown in fig. 38.
5. Install thrust washer No. 10 on the parking gear (Fig. 39). Place the gear and thrust washer on the back face of the case (Fig. 38).
6. Place the two distributor tubes in the governor distributor sleeve. Install the distributor sleeve on the case. As the distributor sleeve is installed, the tubes have to be inserted in the two holes in the case and the parking pawl retaining pin has to be inserted in the alignment hole in the distributor sleeve.
7. Install the four governor distributor sleeve-to-case attaching bolts and torque the bolts to specification.
8. Install the governor distributor assembly on the output shaft. Install the distributor retaining snap ring (Fig. 31).
9. Check the rings in the governor distributor, making sure the rings are fully inserted in the ring grooves and will rotate freely. Install the output shaft and governor distributor assembly in the distributor sleeve (Fig. 30).

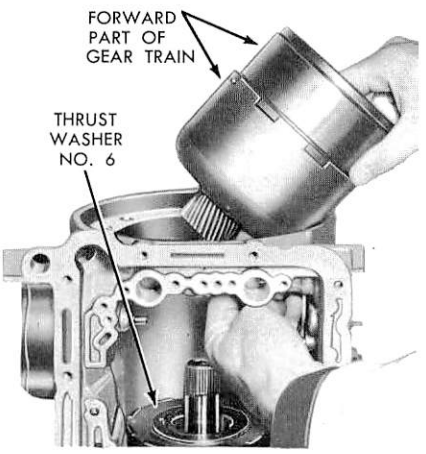

FIG. 24 Removing or Installing Forward Part of Gear Train

10. Place a new extension housing gasket on the case. Install the extension housing and the extension housing-to-case attaching bolts. Torque the bolts to specification.
11. Place the transmission in the holding fixture. Rotate the holding fixture to put the transmission in a vertical position with the front pump mounting face up. **Make sure thrust washer No. 9 is still located at the bottom of the transmission (Fig. 36).**
12. Install the one-way clutch spring retainer into the outer race (Fig. 40).
13. Install the inner race inside of the spring retainer. Be sure the face with the step is installed toward the rear of the case, mating with the thrust washer.
14. Install the individual springs between the inner and outer race as shown in Fig. 40.



FIG. 25 Forward Part of Gear Train Positioned in Holding Fixture

15. Starting at the back of the transmission case, install the one-way clutch rollers by slightly compressing each spring and positioning the roller between the spring and the spring retainer.
16. After the one-way clutch has been assembled, rotate the inner race clockwise to center the rollers and springs. Install the low and reverse drum (Fig. 35). The splines of the drum have to engage with the splines of the one-way clutch inner race. Check the one-way clutch operation by rotating the low and reverse drum. The drum should rotate clockwise but should not rotate counterclockwise.
17. Install thrust washer No. 8 on top of the low and reverse drum (Fig. 41). Install the low-reverse band in the case, with the end of the band for the small strut toward the low-reverse servo (Fig. 29).
18. Install the reverse ring gear and hub on the output shaft.
19. Move the output shaft forward and install the reverse ring gear hub-to-output shaft retaining ring (Fig. 28).
20. Place thrust washers Nos. 6 and 7 on the reverse planet carrier (Fig. 42).
21. Install the planet carrier in the reverse ring gear and engage the tabs of the carrier with the slots in the low-reverse drum.
22. On the bench, install the forward clutch in the reverse-high clutch by rotating the units to mesh the reverse-high clutch plates with the splines of the forward clutch (Fig. 43).
23. Using the end play check reading that was obtained during the transmission disassembly to determine which No. 2 steel backed thrust washer is required, proceed as follows:
    a. Position the stator support vertically on the work bench and install the correct No. 2 thrust washer or washer and spacer as required to bring the end play within specifications.
    b. Install the reverse-high clutch and the forward clutch on the stator support.
    c. Invert the complete unit making sure that the intermediate brake drum bushing is seated on the forward clutch mating surface.
    d. Select the thickest fiber washer (No. 1) that can be inserted between the stator support and the intermediate brake drum thrust surfaces and still maintain a slight clearance. **Do not select a washer that must be forced between the stator support and intermediate brake drum.**
    e. Remove the intermediate brake drum and forward clutch unit from the stator support.
    f. Install the selected Nos. 1 and 2 thrust washers on the front pump stator support (Fig. 19). using enough vaseline to hold the thrust washers in position during the front pump installation.
24. Install thrust washer No. 3 on the forward clutch (Fig. 44).
25. Install the forward clutch hub and ring gear in the forward clutch by rotating the units to mesh the forward clutch plates with the splines on the forward clutch hub (Fig. 45).
26. Install thrust washer No. 4 on the front planet carrier (Fig. 46). Install the front planet carrier into the forward clutch hub and ring gear. **Check the forward thrust bearing race inside the planet carrier for proper location against the thrust bearing. Make sure the race is centered for alignment with the sun gear on the input shell (Fig. 47).**
27. Install the input shell and sun gear on the gear train (Fig. 48). Rotate the input shell to engage the drive lugs of the reverse-high clutch. If the drive lugs will not engage, the outer race inside the forward planet carrier is not centered to engage the end of the sun gear inside the input shell. Center the thrust bearing race and install the input shell.
28. Hold the gear train together and install the forward part of the gear train assembly in the case (Fig. 24). The input shell sun gear must mesh with the reverse pinion gears. The front planet carrier internal splines must mesh with the splines on the output shaft.
29. A new band should be soaked in transmission fluid for fifteen minutes before it is installed. Install the intermediate band through the front of the case (Fig. 22).
30. Install a new front pump gasket on the case. Line up the bolt holes in the gasket with the holes in the case.
31. Install the front pump stator support into the reverse-high clutch. Align the pump-to-case attaching bolt holes. Install the front pump-to-case attaching bolts and torque them to specification.
32. Install the input shaft (Fig. 20). Be sure the short splined end is installed toward the rear of the transmission. Rotate the holding fixture to place the transmission in a horizontal position. Check the transmission end play as shown in Fig. 18. If the

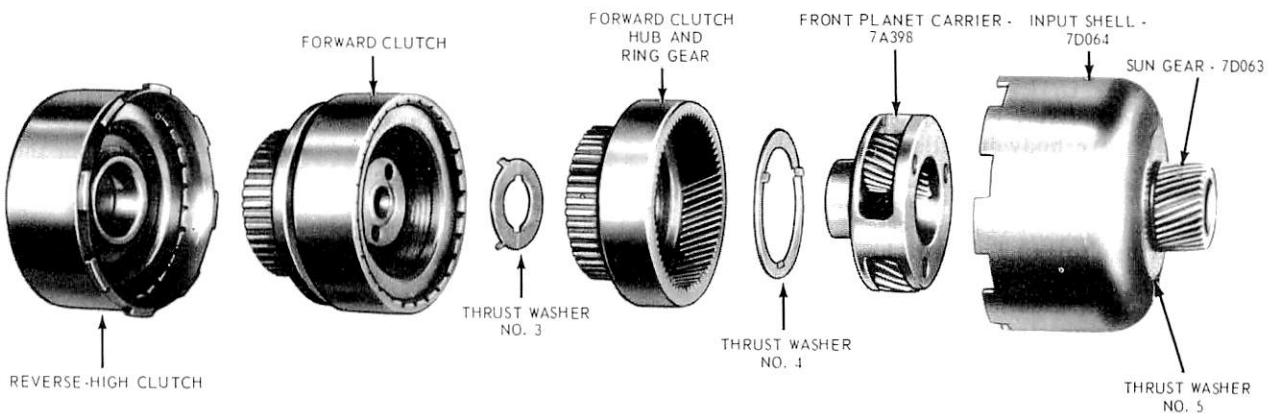

FIG. 26 Forward Part of Gear Train Disassembled

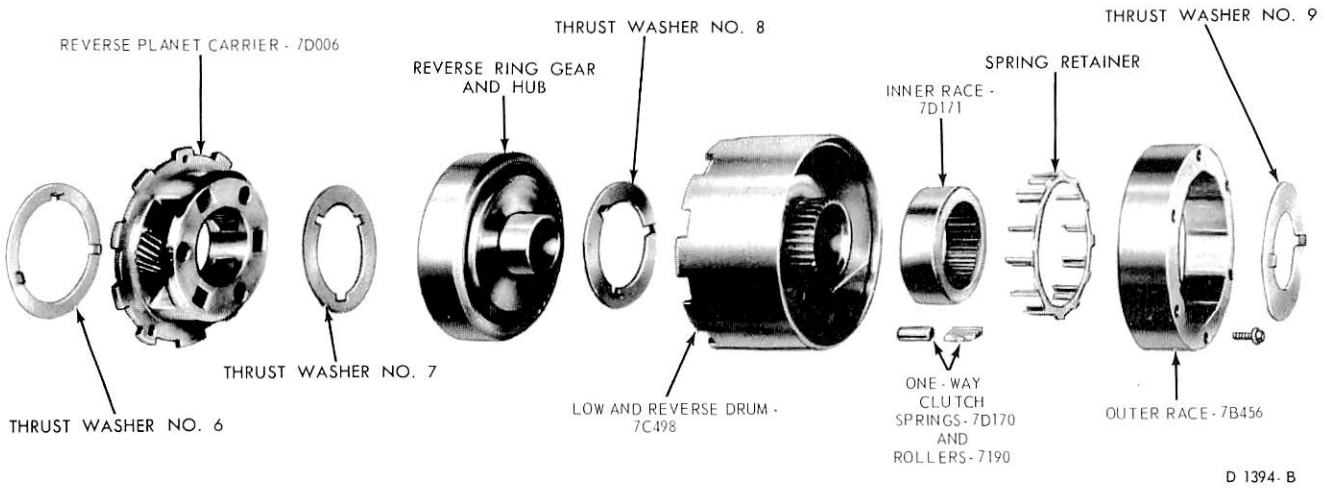

FIG. 27 Lower Part of Gear Train Disassembled

end play is not within specification, either the wrong selective thrust washers (Fig. 19) were used, or one of the 10 thrust washers (Fig. 35) is not properly positioned.

33. Remove the dial indicator used for checking the end play and install the one front pump-to-case attaching bolt. Torque the bolt to specification.
34. Place the converter housing on the transmission case. Install the five converter housing-to-case attaching bolts. Torque the bolts to specification.
35. Install the intermediate and low-reverse band adjusting screws in the case. Install the struts for each band (Fig. 17).
36. Adjust the intermediate and low-reverse band. Refer to Adjustments in this Part for band adjusting procedures.
37. Install a universal joint yoke on the output shaft. Rotate the input and output shafts in both directions to check for free rotation of the gear train.
38. Install the control valve body (Fig. 16). Refer to Removal and Installation of this Part for the control valve body installation procedures.
39. Place a new pan gasket on the case and install the pan and pan-to-case attaching bolts. Torque the attaching bolts to specification.
40. Remove the transmission from the holding fixture. Install the two extension housing-to-case attaching bolts. Torque the bolts to specification.
41. Install the primary throttle valve in the transmission case (Fig. 14).
42. Install the vacuum unit and control rod in the case.
43. **Make sure the input shaft is properly installed in the front pump stator support and gear train.** The short splined end of the shaft should be installed toward the rear of the transmission. Install the converter in the front pump and the converter housing.
44. Install a new T.R.S. switch, if required. Torque the switch to specification.

CONTROL VALVE BODY

Disassembly

When the main control is disassembled and the valve body-to-screen gasket is removed, the gasket should not be cleaned in a degreaser, solvent or any type of detergent solution. To clean the gasket, wipe it off with a lint-free cloth.

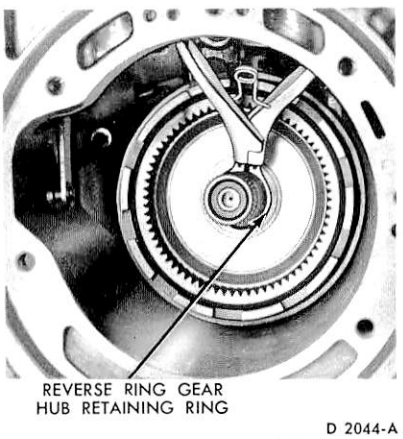

FIG. 28 Removing or Installing Reverse Ring Gear Hub Retaining Ring

1. Remove the eight 10-24 x 1 3/8 inch screws that attach the oil screen to the body (Fig. 49) and remove the screen and gasket (Fig. 50). Be careful not to lose the throttle pressure limit valve and spring when separating the oil screen from the valve body.
2. Remove the two 1/4-20 x 1 1/2 inch attaching screws from the upper valve body and the nine 10 x 24 x 7/8 inch attaching screws from the underside of the lower valve body (Fig. 49). Separate the lower valve body, gasket and separator plate (Fig. 51) from the upper valve body. Be careful not to lose the upper valve body shuttle valve and check valve when separating the upper and lower valve bodies.
3. Remove the manual valve retaining ring and slide the manual valve out of the body. The retaining ring is used to hold the manual valve in its bore during shipment and should be removed and discarded before sliding the manual valve out of the control valve body.
4. Carefully pry the low servo modulator valve retainer from the body and remove the retainer plug, spring and valve from the body. While working in the low servo modulator valve bore, pry the



FIG. 29 Removing or Installing Low-Reverse Band

downshift valve retainer from the body and remove the spring and downshift valve (Fig. 52).
5. Using side cutters, carefully pry the throttle booster valve plug retaining pin from the valve body. Remove the plug, valve and spring.
6. Remove the cut-back valve and transition valve cover plate from the valve body (Fig. 52).
7. Remove the cut-back valve from the body.
8. Remove the transition valve spring, transition valve, 2-3 back-out valve and spring from the body.
9. Remove the 1-2 shift valve and 2-3 shift valve cover plate from the body.
10. Remove the 2-3 shift valve, spring and throttle modulator valve from the body.
11. Remove the 1-2 shift valve, D2 valve and spring from the body.
12. Remove the intermediate servo retaining pin and remove the intermediate accumulator retainer, valve and spring from the body.
13. Press the main oil pressure booster valve inward and remove the retaining pin. Remove the main oil pressure booster valve, sleeve, springs, retainer and the main oil pressure regulator valve.
14. Remove the line coasting boost valve retainer from the body and remove the spring and line coasting boost valve.

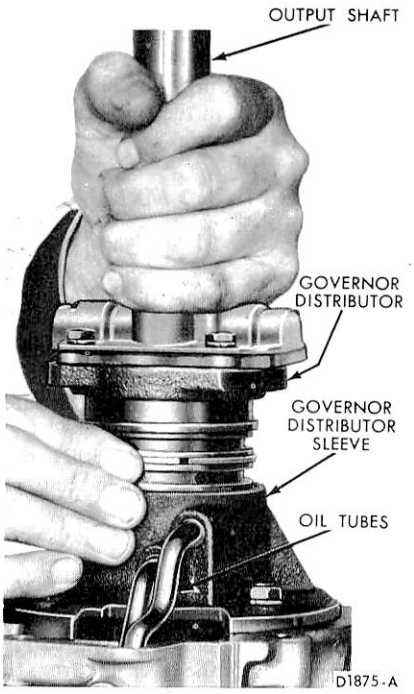

FIG. 30 Removing or Installing Output Shaft and Governor Distributor

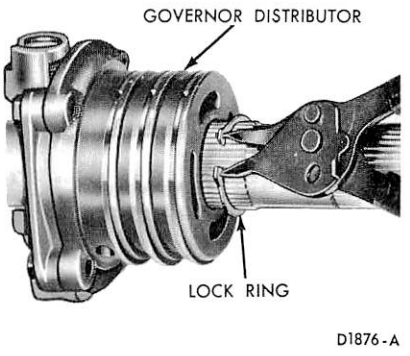

FIG. 31 Removing or Installing Governor Distributor Snap Ring

Assembly
1. Place the shuttle valves in the upper and lower bodies as shown in Figure 51. Position the gasket and separator plate on the lower body and install but do not tighten the attaching screw.
2. Place the lower body and plate assembly on the upper valve body and install the eleven attaching screws finger tight (Fig. 49).
3. Install the oil screen screws loosely, without the screen, to properly align the upper and lower valve bodies, gasket and separator plate.
4. Torque the four bolts that are covered by the screen to specification.
5. Position the throttle pressure limit valve and spring in the lower valve body (Fig. 50). Remove the oil screen attaching screws and place the gasket and oil screen in position on the lower valve body. Reinstall the screen attaching screws (Fig. 49).
6. Torque all the valve body and screen attaching screws to specification.
7. Insert the downshift valve (Fig. 52) into the body with the small diameter facing inward. Install the downshift valve spring and retainer. Insert the low servo modulator valve, spring and retainer plug in the body. Depress the plug and install the retainer.
8. Place the throttle booster valve spring, valve (small diameter end into spring) and plug into the body (Fig. 52). Depress the plug and press in the retaining pin. Be sure the three grooves are at the top of the pin as it is installed.
9. Place the spring, 2-3 back-out valve and the transition valve and spring in the body.
10. Place the cut-back valve in the body.
11. Secure the cut-back and the transition valve cover plate to the body with the two attaching screws. Torque the screws to specification.
12. Place the throttle modulator valve, spring and 2-3 shift valve in the body.
13. Place the spring, D2 valve and the 1-2 shift valve in the body.
14. Secure the 1-2 shift valve and the 2-3 shift valve cover plate to the body with the three attaching screws. Torque the screws to specification.

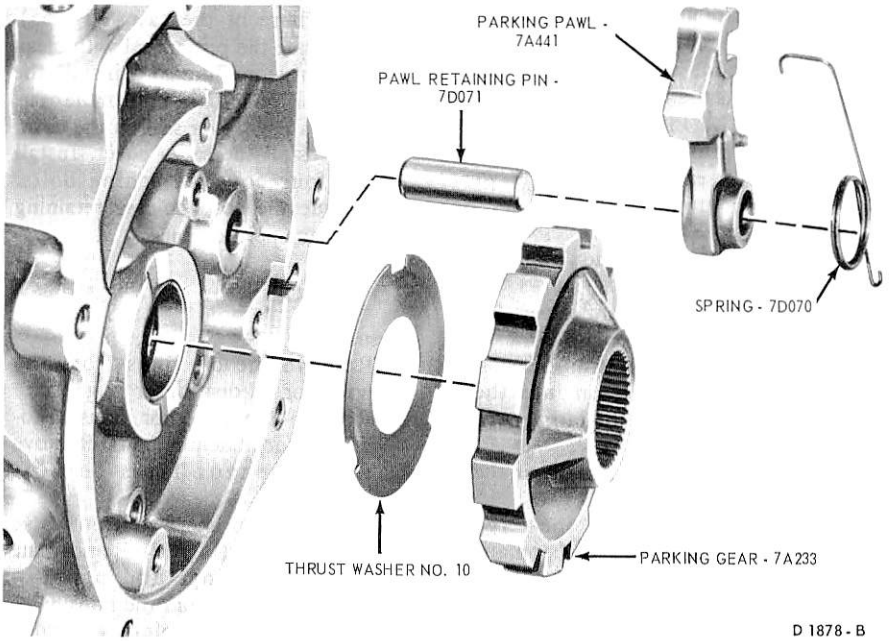

FIG. 32 Parking Pawl, Return Spring Retaining Pin and Gear

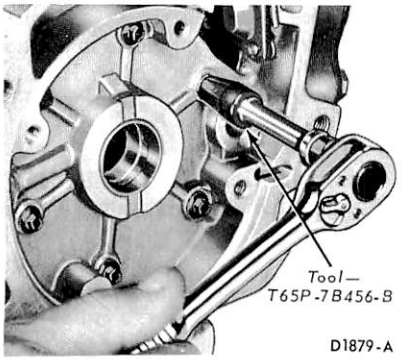

FIG. 33 Removing One-Way Clutch Outer Race Attaching Bolts

15. Place the spring, intermediate servo accumulator valve and retainer in the body. Depress the retainer and install the retaining pin.
16. Insert the line coasting boost valve and spring in the body. Depress the spring and install the retainer.
17. Insert the main oil pressure regulator valve and spring retainer in the body (Fig. 52). Install the two springs, sleeve and the main oil pressure booster valve in the body.
18. Hold the main oil pressure booster valve in place and install the retaining pin.
19. Slide the manual valve into the valve body. Make sure that the end with the two lands closest together is inserted first.

INTERMEDIATE SERVO

Disassembly

1. Remove the transmission identification tag and the four servo cover to case attaching bolts.
2. Remove the servo cover, gasket, servo piston, and piston return spring from the case (Fig. 53).
3. Remove the intermediate servo piston from the cover.
4. Remove the seal rings from the servo piston and cover.

Assembly

1. Install a new seal on the cover and servo piston. Figure 54 shows the correct servo piston and cover for each transmission model. Lubricate the seals with clean transmission fluid. Install the piston into the cover. Be careful not to damage the piston seal.
2. Install the piston return spring in the servo bore of the case.
3. Place a new gasket on the servo cover. Position the servo piston and cover assembly into the case with the piston stem slot in a horizontal position to engage the strut. Use two 5/16-18 bolts, 1 1/4 inch long, 180 degrees apart, to position the cover against the case. Install two cover attaching bolts. Remove the two 1 1/4 inch bolts and install the transmission identification tag and the other two cover attaching bolts. Torque the bolts to specifications.

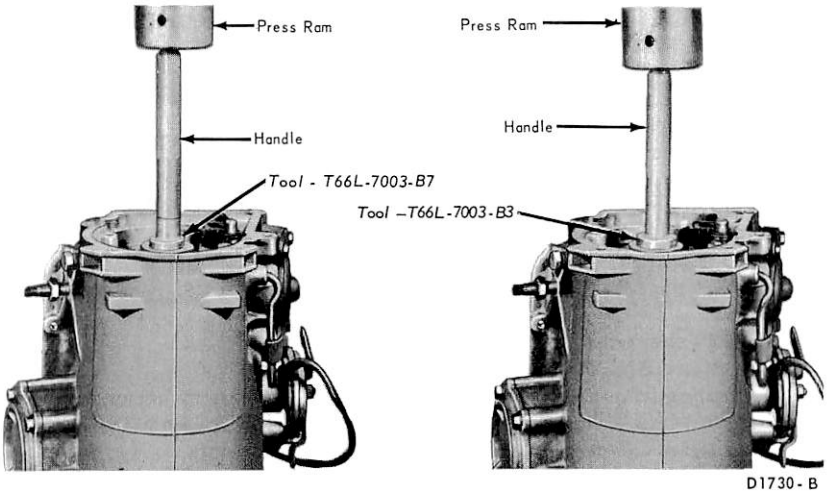

FIG. 34 Replacing Transmission Case Bushing

LOW-REVERSE SERVO

Disassembly

1. Remove the four servo cover-to-case attaching bolts.
2. Remove the servo cover, cover seal, servo piston and piston return spring from the case (Fig. 55).
3. The servo piston seal is bonded to the piston. If the seal has to be replaced, replace the piston assembly which includes the seal.

Assembly

1. Place the piston return spring in the servo bore of the case (Fig. 55). Lubricate the piston seal with clean transmission fluid and install the servo piston into the bore of the case.
2. Place a new cover seal on the cover and install the servo cover. Install the four cover attaching bolts. Torque the cover-to-case retaining bolts to specifications.

GOVERNOR

Disassembly

1. Remove the oil rings from the governor oil distributor (Fig. 56).
2. Remove the governor housing-to-distributor attaching bolts. Remove the governor from the oil distributor.
3. Remove the primary governor valve retaining ring (Fig. 57). Remove the washer, spring, and primary governor valve from the housing.
4. Remove the secondary governor valve spring retaining clip, spring, and governor valve from the housing.

Assembly

1. Install the secondary governor valve in the housing. Install the spring and retaining clip. **Make sure the clip is installed with the small concaved area facing downward, to hold the spring in the correct position.**
2. Install the primary governor valve in the housing. Install the spring, washer and retaining ring. **Make sure the washer is centered in the housing on top of the spring and the retaining ring is fully seated in the ring groove of the housing.**
3. Install the governor assembly on the oil distributor and torque the attaching bolts to specification.
4. Install the oil rings on the distributor. Check the oil rings for free rotation in the ring grooves on the oil distributor.

DOWNSHIFT AND MANUAL LINKAGE

Disassembly

1. Apply penetrating oil to the outer lever attaching nut to prevent breaking the inner lever shaft. Remove the downshift outer lever nut and remove the downshift outer and inner levers.

On vehicles equipped with a case mounted neutral start switch, remove it by placing a screwdriver behind the switch and carefully prying the switch off the lever.

From inside the transmission case, remove the upper retaining ring from the manual lever link (Fig. 58). Remove the upper end of the lever link from the case retaining pin.

2. From the back of the transmission case, remove the upper retaining ring and flat washer from the

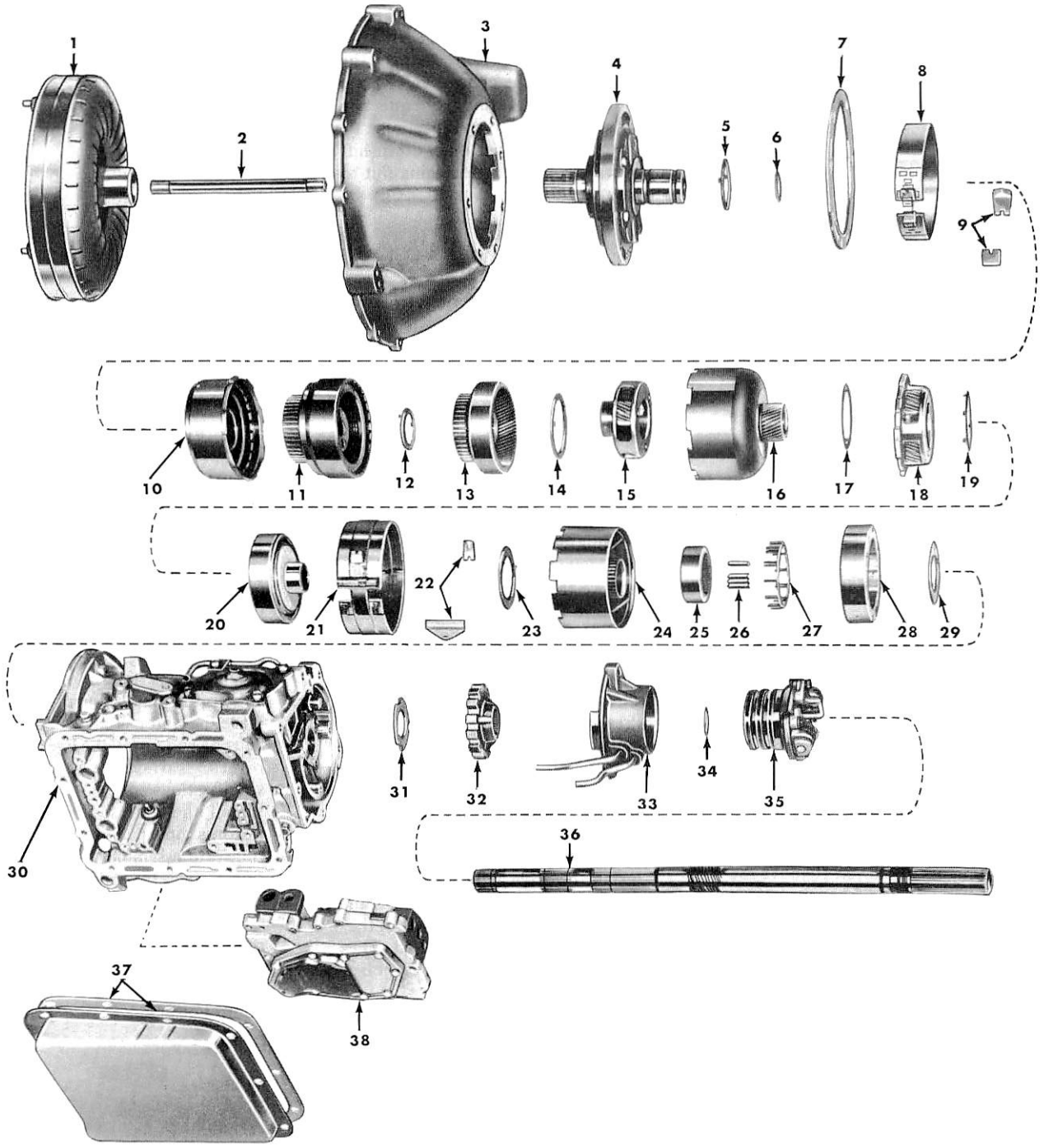

1. CONVERTER – 7902
2. INPUT SHAFT – 7015
3. CONVERTER HOUSING – 7976
4. FRONT PUMP – 7A103
5. THRUST WASHER NO. 1
6. THRUST WASHER NO. 2
7. FRONT PUMP GASKET – 7A136
8. INTERMEDIATE BAND – 7D034
9. BAND STRUTS – 7D029
10. REVERSE AND HIGH CLUTCH DRUM
11. FORWARD CLUTCH AND CYLINDER
12. THRUST WASHER NO. 3
13. FORWARD CLUTCH HUB – 7B067 AND RING GEAR – 7A153
14. THRUST WASHER NO. 4
15. FRONT PLANET CARRIER – 7A398
16. INPUT SHELL – 7D064, SUN GEAR – 7D063 AND THRUST WASHER NO. 5
17. THRUST WASHER NO. 6
18. REVERSE PLANET CARRIER – 7D106
19. THRUST WASHER NO. 7
20. REVERSE RING GEAR – 7A153 AND HUB – 7D164
21. LOW AND REVERSE BANDS – 7D095
22. BAND STRUTS – 7A125
23. THRUST WASHER NO. 8
24. LOW AND REVERSE DRUM – 7C498
25. ONE-WAY CLUTCH INNER RACE – 7D171
26. ROLLER – 7190 (12) AND SPRING – 7D170 (12)
27. SPRING AND ROLLER CAGE – 7D191
28. ONE-WAY CLUTCH OUTER RACE – 7B456
29. THRUST WASHER NO. 9
30. CASE – 7005
31. THRUST WASHER NO. 10
32. PARKING GEAR – 7A233
33. GOVERNOR DISTRIBUTOR SLEEVE – 7C232
34. SNAP RING
35. GOVERNOR & DISTRIBUTOR ASSY. – 7C053
36. OUTPUT SHAFT – 7060
37. OIL PAN – 7A194 AND GASKET – 7A191
38. CONTROL VALVE BODY – 7A100

D 1524 - G

FIG. 35 Transmission Subassemblies—Typical

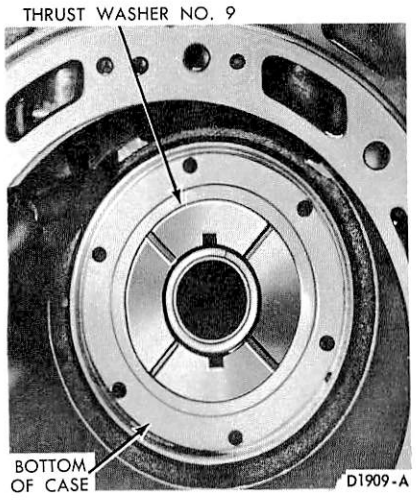

FIG. 36 Number 9 Thrust Washer Location

parking pawl link (Fig. 59). Remove the pawl link from the case retaining pin.

3. From the back of the transmission case, remove the parking pawl link, toggle rod, and manual lever link as an assembly (Fig. 60).
4. Remove the rear parking pawl link lower retaining ring, flat washer and link from the toggle rod (Fig. 58).
5. Remove the manual lever link, lower retaining ring, flat washer, and link from the toggle rod.
6. Install the manual and parking pawl links, flat washers and retaining rings to the toggle rod.
7. Remove the inner manual lever attaching nut and lever. Remove the outer manual lever from the case.
8. To remove the manual lever seal, use the tools shown in Fig. 61. To install the new seal, use the tool shown in Fig. 62.

Assembly

1. Install the outer manual lever in the case. Install the inner manual lever and attaching nut with the chamfer facing toward the lever (Fig. 58). Torque the nut to specification.
2. From the back of the transmission case, install the parking toggle rod and link assembly into the case (Fig. 60).
3. Install the parking pawl link on the case retaining pin. Install the flat washer and link retaining ring (Fig. 59).
4. Position the inner manual lever behind the manual lever link, **with the cam on the lever contacting the lower link pin.**
5. Install the upper end of the manual lever link on the case retaining pin. Install the retaining ring.
6. Operate the manual lever and check for correct linkage operation.
7. On vehicles equipped with a case mounted neutral start switch, reinstall the switch. Adjust the switch after the control valve body has been installed. Torque the attaching bolts to specification.
8. Install the inner and outer downshift levers. Torque the attaching nut to specification.

FRONT PUMP

Disassembly

1. Remove the four seal rings from the stator support.
2. Remove the five bolts that attach the stator support to the front pump housing. Remove the stator support from the pump housing (Fig. 63).
3. Remove the front and rear stator bushings if they are worn or damaged. Use the cape chisel (Fig. 64) and cut along the bushing seam until the chisel breaks through the bushing wall. Pry the loose ends of the bushing up with an awl and remove the bushing.
4. Remove the drive and driven gears from the front pump housing.
5. Press the bushing from the front pump housing as shown in Fig. 65.

Assembly

1. Press a new bushing into the pump housing with the handle and tool shown in Fig. 65. Make sure the bushing is installed with the slot and groove positioned to the rear of the pump body and 60 degrees below the horizontal center line.
2. Install the drive and driven gears in the pump housing. Each gear has an identification mark on the side of the gear teeth that are chamfered. The chamfered side with the identification mark has to be positioned downward against the face of the pump housing.
3. Press new bushings into the stator support with the tool shown in Fig. 66. Use the long end of the tool for the front bushing and the short end for the rear bushing. **When installing the rear bushing, be sure the hole in the bushing is lined up with the lube hole in the stator support.**
4. Place the stator support in the pump housing and install the five attaching bolts. Torque the bolts to specifications.
5. Install the four seal rings on the stator support. The two large oil rings are assembled first in the oil ring grooves toward the front of the stator support (Fig. 63).
6. Check the pump gears for free rotation by placing the pump on the converter drive hub in its normal running position and turning the pump housing.

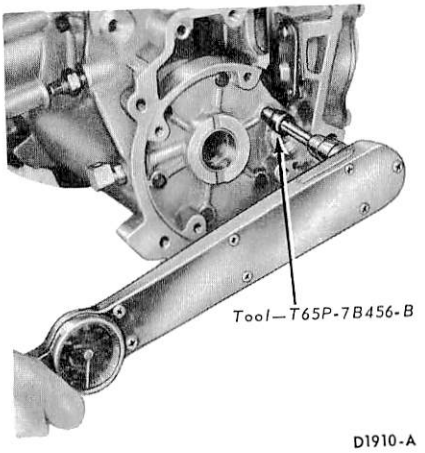

FIG. 37 Installing One-Way Clutch Outer Race Attaching Bolts

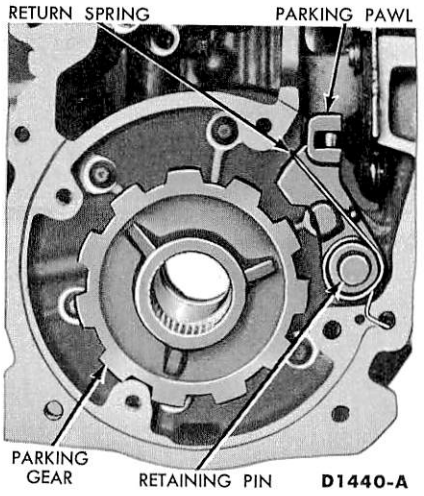

FIG. 38 Parking Pawl and Gear

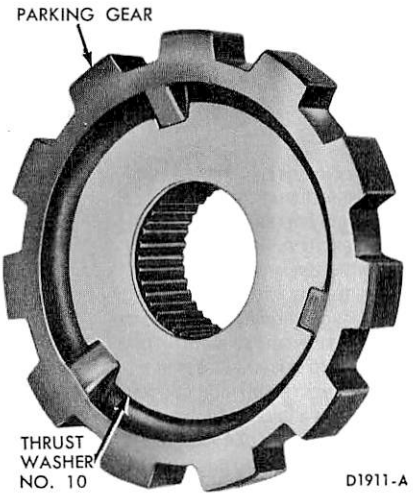

FIG. 39 Number 10 Thrust Washer Location

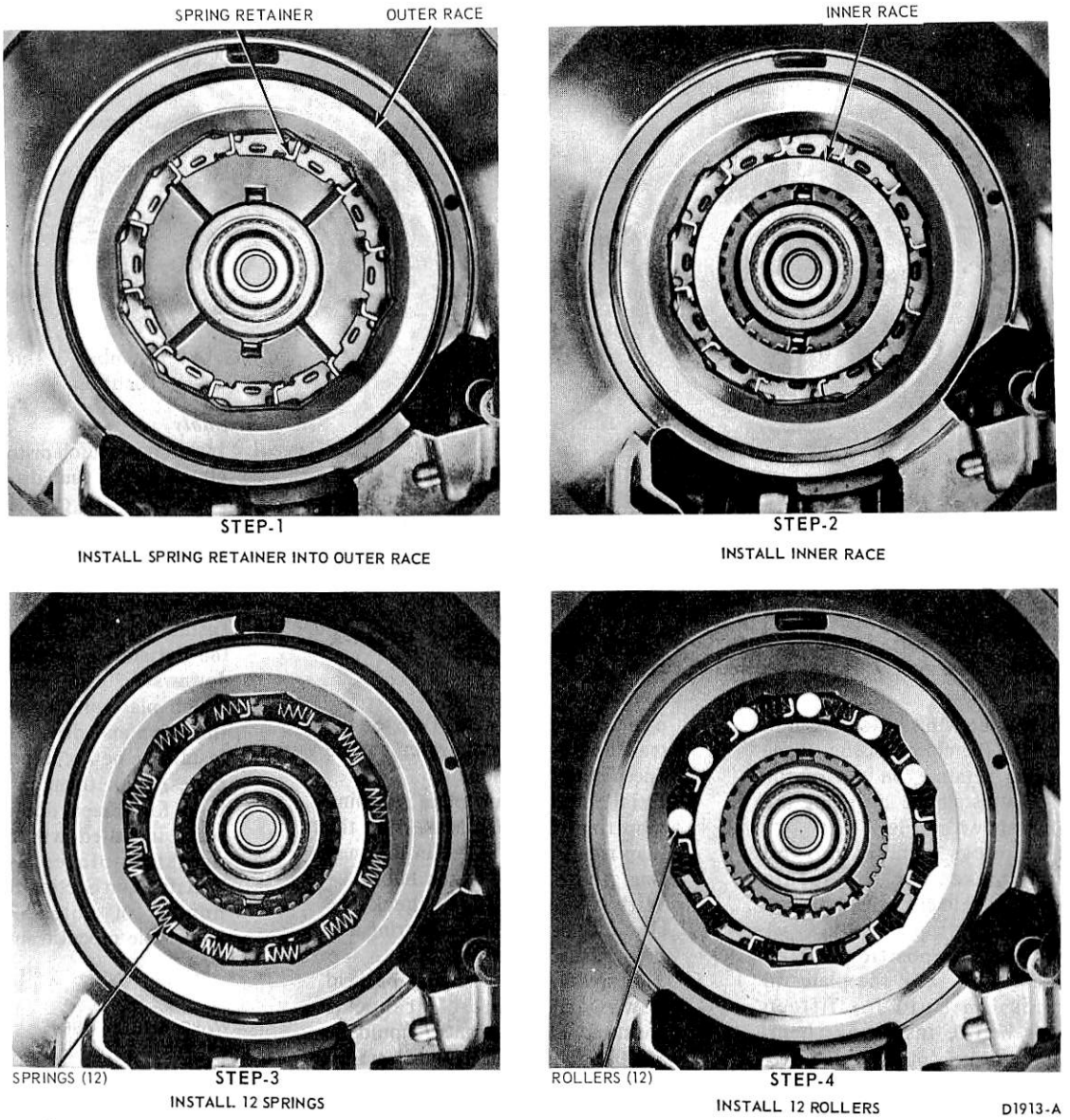

FIG. 40 Installing One-Way clutch

7. If the front pump seal must be replaced, mount the pump in the transmission case and remove the seal with the tool shown in Fig. 67. To install the new seal, use the tool shown in fig. 68.

REVERSE-HIGH CLUTCH

Disassembly

1. Remove the pressure plate retaining snap ring (Fig. 69).
2. Remove the pressure plate, and the drive and driven clutch plates (Fig. 70). **If the composition clutch plates are to be reused, do not clean them in a vapor degreaser or with a detergent solution. Wipe the plates with a lint-free cloth.**
3. To remove the piston spring retainer snap ring, place the clutch hub in the Arbor Press. With the tools shown in Fig. 71, compress the piston return springs and remove the snap ring. When the Arbor Press ram is released, guide the spring retainer to clear the snap ring groove of the drum.
4. Remove the spring retainer and piston return spring.
5. Remove the piston by inserting air pressure in the piston apply hole of the clutch hub (Fig. 72).
6. Remove the piston outer seal from the piston and the piston inner seal from the clutch drum (Fig. 70).

Assembly

1. Install a new inner seal in the clutch drum and a new outer seal on the clutch piston. Lubricate the seals with clean transmission fluid and install the piston into the clutch drum.

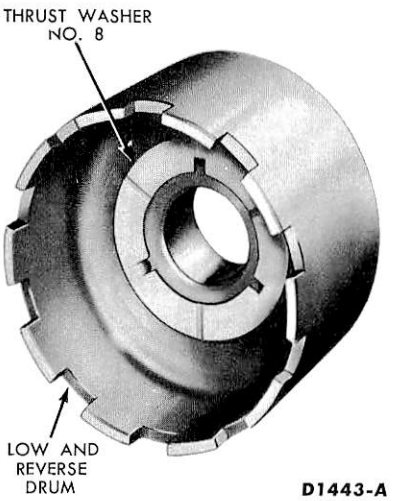

FIG. 41 Number 8 Thrust Washer Location

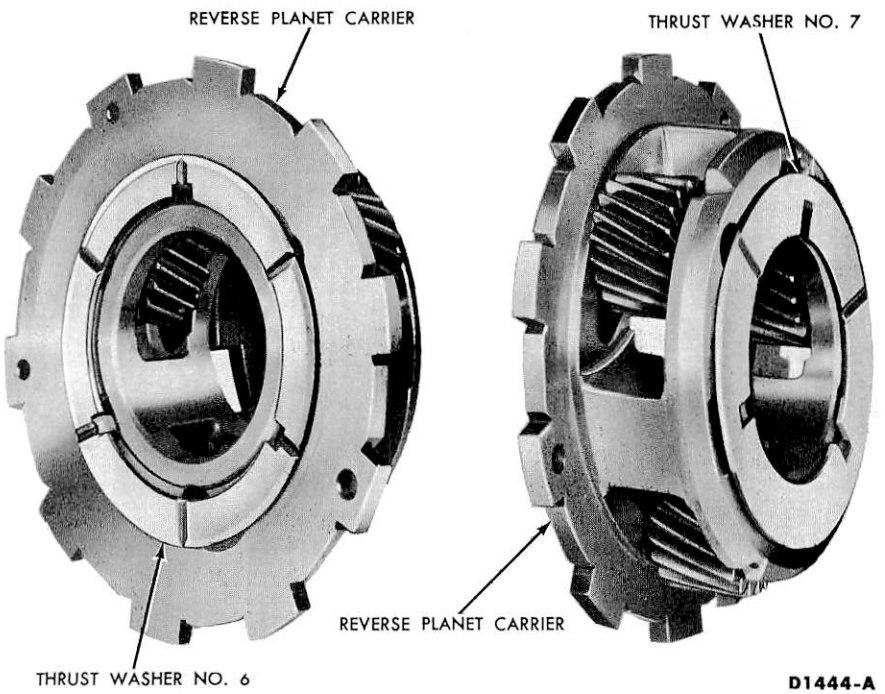

FIG. 42 Number 6 and 7 Thrust Washer Location

2. Place the clutch piston spring into position on the clutch piston. Place the spring retainer on top of the spring. To install the snap ring use the tools shown in Fig. 71.

As the press ram is moved downward, make sure the spring retainer is centered to clear the snap ring groove. Install the snap ring.

3. When new composition clutch plates are used, soak the plates in transmission fluid for fifteen minutes before installing them. Install the clutch plates alternately starting with a steel plate, then a non-metallic plate (Fig. 70). The last plate installed is the pressure plate. For the correct number of clutch plates required for each transmission model, refer to the Specification Section.
4. Install the pressure plate retaining snap ring (Fig. 70). Make sure the snap ring is fully seated in the snap ring groove of the clutch hub.
5. With a feeler gauge, check the clearance between the snap ring and the pressure plate (Fig. 73).
6. The pressure plate should be held downward as the clearance is checked. The clearance should be 0.050 to 0.071 inch. If the clearance is not within specifications, selective thickness snap rings are available in these thicknesses, 0.050-0.054, 0.064-0.068, 0.078-0.082 and 0.092-0.096 inch. Install the correct size snap ring and recheck the clearance.

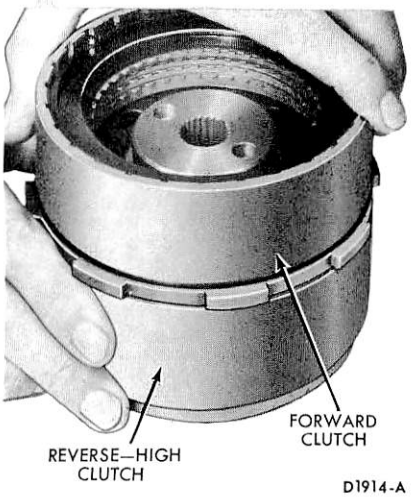

FIG. 43 Installing Clutch Units

FORWARD CLUTCH

Disassembly

1. Remove the clutch pressure plate retaining snap ring (Fig. 74).
2. Remove the pressure plate, and the drive and driven clutch plates from the clutch hub (Fig. 75).
3. Remove the disc spring retaining snap ring (Fig. 76).
4. Apply air pressure at the clutch piston pressure hole (Fig. 77) to remove the piston from the clutch hub.
5. Remove the clutch piston outer seal and the inner seal from the clutch hub (Fig. 75).

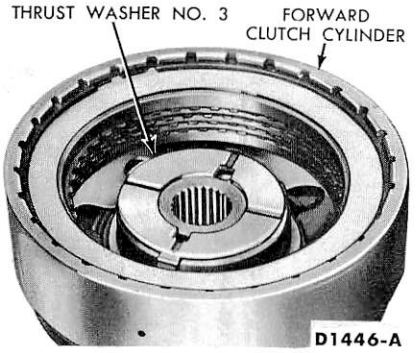

FIG. 44 Number 3 Thrust Washer Location

Assembly

1. Install new clutch piston seals on the clutch piston and drum. Lubricate the seals with clean transmission fluid.
2. Install the clutch piston into the clutch hub. Install the disc spring and retaining snap ring (Fig. 76).
3. **Install the lower pressure plate with the flat side up and the radius side downward.** Install one non-metallic clutch plate and alternately install the drive and driven plates. Before installing new composition clutch plates, soak them in transmission fluid for fifteen minutes. The last plate installed will be the upper pressure plate. Refer to the Specification Section for the correct number of clutch plates for the applicable model transmission.



FIG. 45 Installing Forward Clutch Hub and Ring Gear

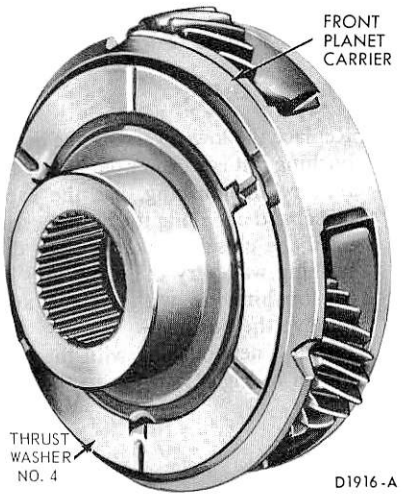

FIG. 46 Number 4 Thrust Washer Location

4. Install the pressure plate retaining snap ring (Fig. 74). Make sure the snap ring is fully seated in the ring groove of the clutch hub.
5. With a feeler gauge, check the clearance between the snap ring and the pressure plate (Fig. 78). Downward pressure on the plate should be used when making this check. The clearance should be 0.025-0.050 inch.
6. If the clearance is not within specifications, selective snap rings are available in these thicknesses: 0.050-0.054, 0.064-0.068, 0.078-0.082 and 0.092-0.096 inch. Insert the correct size snap ring and recheck the clearance.

FORWARD CLUTCH HUB AND RING GEAR

Disassembly

1. Remove the forward clutch hub retaining snap ring (Fig. 79).



FIG. 47 Installing Front Planet Carrier

2. Remove the forward clutch hub from the ring gear.
3. Press the bushing from the clutch hub as shown in Fig. 80.

Assembly

1. Install a new bushing into the clutch hub as shown in Fig. 80.
2. Install the forward clutch hub in the ring gear. Make sure the hub is bottomed in the groove of the ring gear.

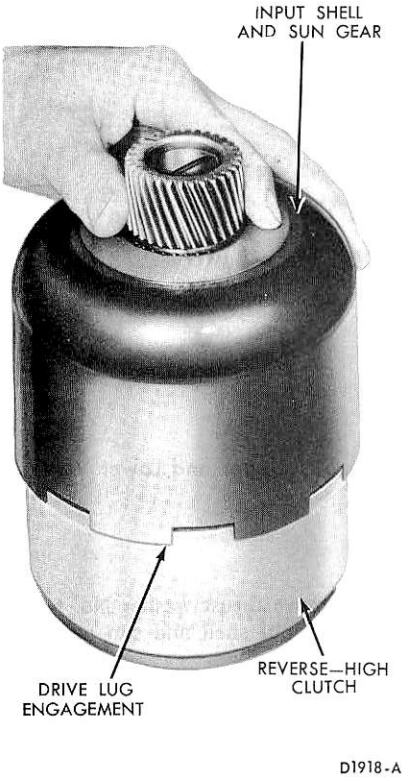

FIG. 48 Installing Input Shell and sun Gear

3. Install the front clutch hub retaining snap ring. Make sure the snap ring is fully seated in the snap ring groove of the ring gear.

INPUT SHELL AND SUN GEAR

Disassembly

1. Remove the external snap ring from the sun gear (Fig. 81).

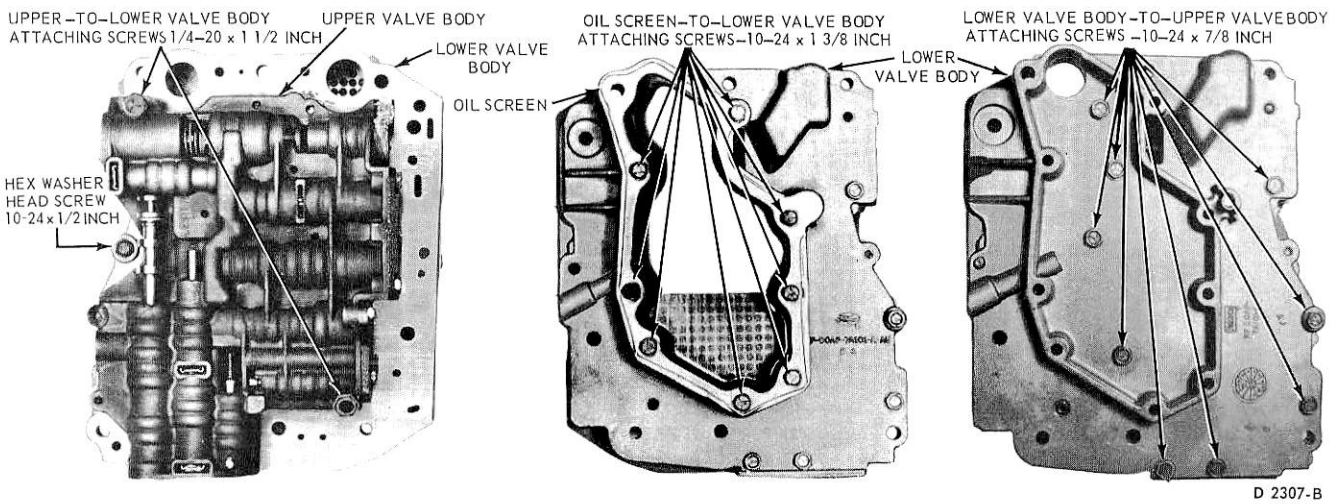

FIG. 49 Control Valve Body and screen Attaching Screws

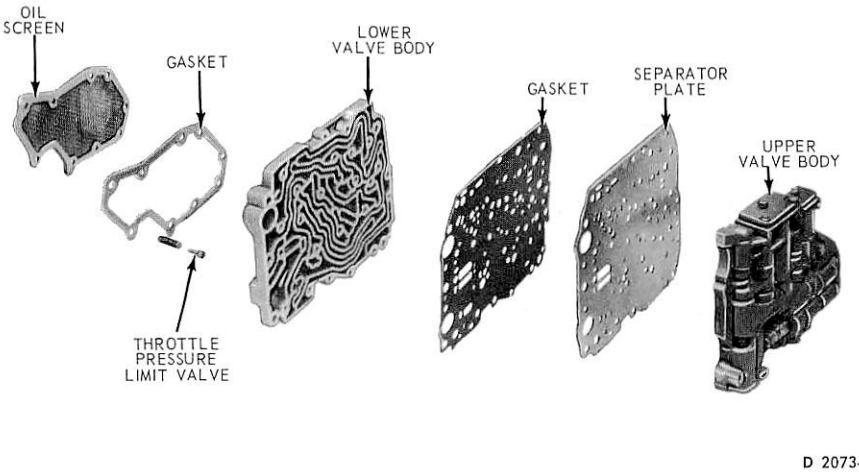

FIG. 50 Upper and Lower Valve Bodies Disassembled

2. Remove thrust washer No. 5 from the input shell and sun gear (Fig. 82).
3. From inside the input shell, remove the sun gear. Remove the internal snap ring from the sun gear.
4. If the sun gear bushings are to be replaced, use the tool shown in Fig. 83 and press both bushings though the gear.

Assembly

1. Press a new bushing into each end of the sun gear with the tool shown in Fig. 83.
2. Install the internal snap ring of the sun gear. Install the sun gear in the input shell.
3. Install thrust washer No. 5 on the sun gear and input shell (Fig. 82).
4. Install the external snap ring on the sun gear (Fig. 81).

REVERSE RING GEAR AND HUB

Disassembly

1. Remove the hub retaining snap ring from the reverse ring gear.
2. Remove the hub from the reverse ring gear (Fig. 84).

Assembly

1. Install the hub in the reverse ring gear. Make sure the hub is fully seated in the groove of the ring gear.
2. Install the snap ring in the reverse ring gear. Make sure the snap ring is fully seated in the snap ring groove of the ring gear.

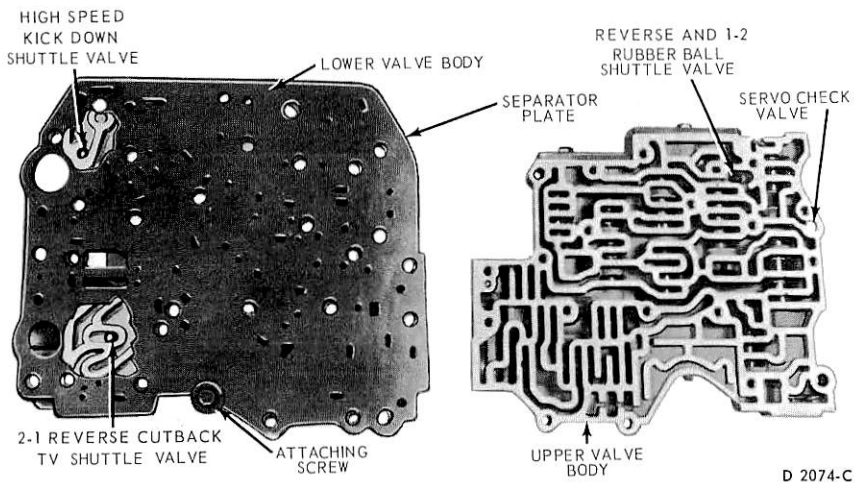

FIG. 51 Separating Upper and Lower Valve Bodies

LOW-REVERSE BRAKE DRUM BUSHING REMOVAL AND INSTALLATION

1. Replace the low-reverse brake drum bushing if it is worn or damaged. To remove the bushing, use the cape chisel and cut along the bushing seal until the chisel breaks through the bushing wall. Pry the loose ends of the bushing up with an awl and remove the bushing.
2. Install a new bushing with the tool shown in Fig. 85.

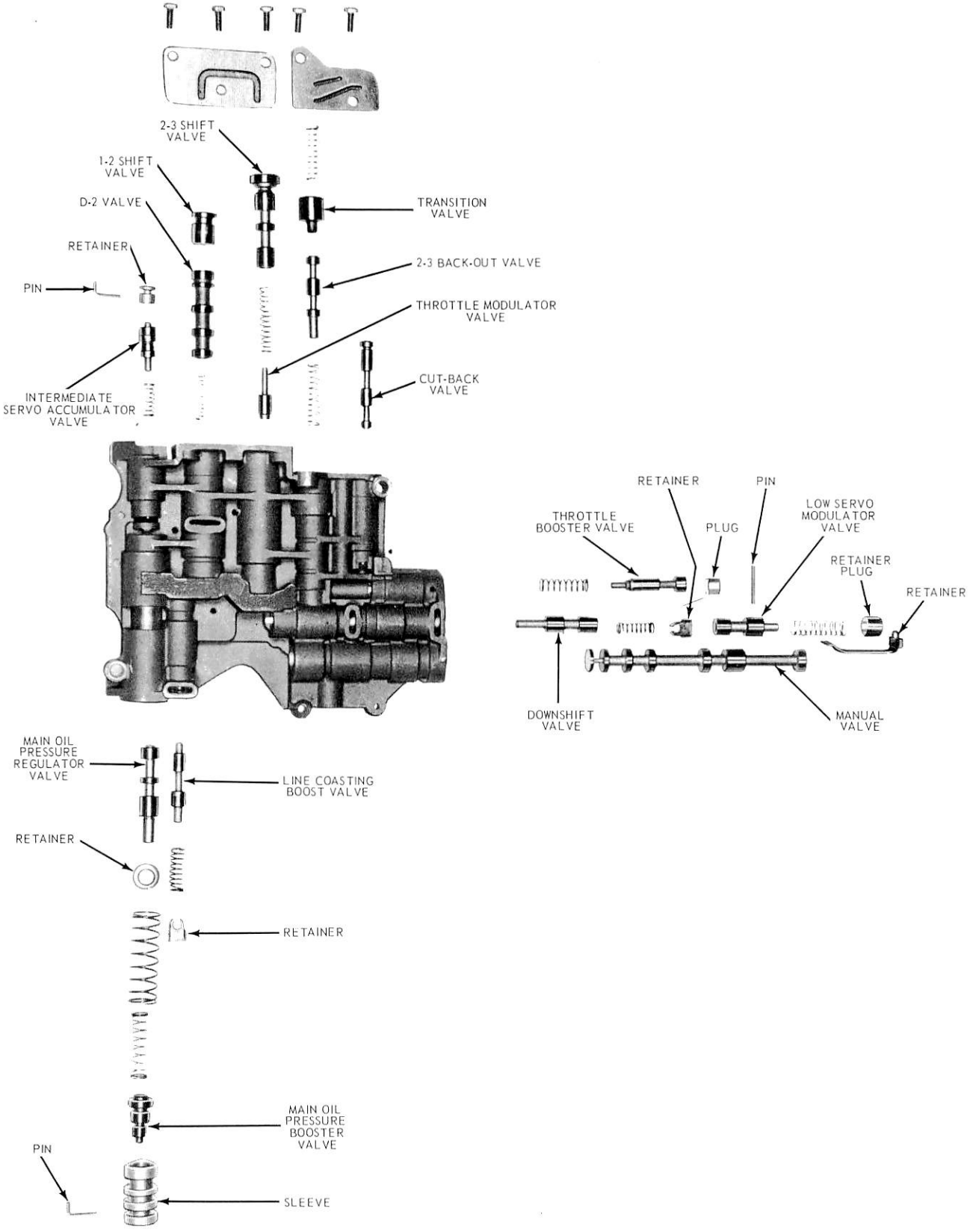

D 2075-C

FIG. 52 Upper Valve Body Disassembled

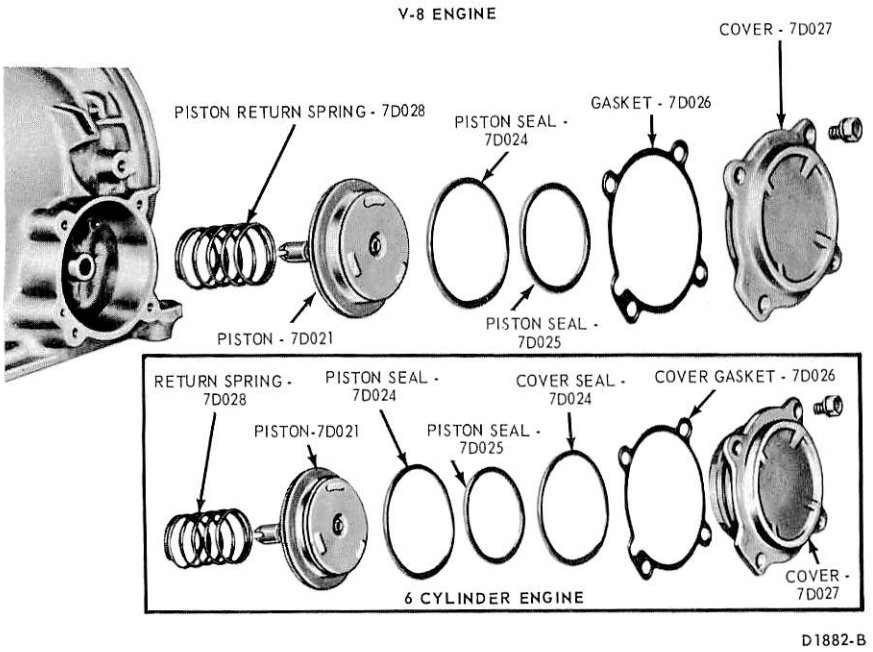

FIG. 53 Intermediate Servo Disassembled

Vehicle	Engine	Transmission	Cover ① And Servo Indent.	Spring	
				Free Length	Paint Stripe
F-100, F-250 Econoline, Bronco	240, 300, 302	PEA-F7, K7, T6, U6, AG2, AH2, AJ2, AK2, AL	A	2.480	White
F-100, F-250 Econoline	240	PEA-J7, R6, S6	B	2.480	White

① Identification Letter Cast in Cover and End of Servo

CD2177-D

FIG. 54 Intermediate Servo Piston, Cover and Spring Identification

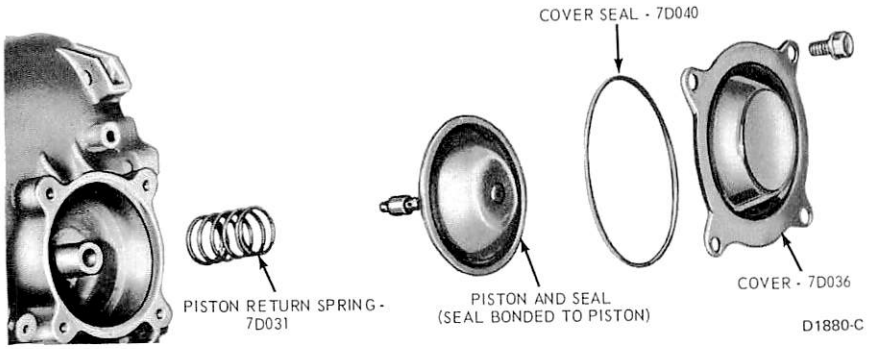

FIG. 55 Low-Reverse Servo Disassembled

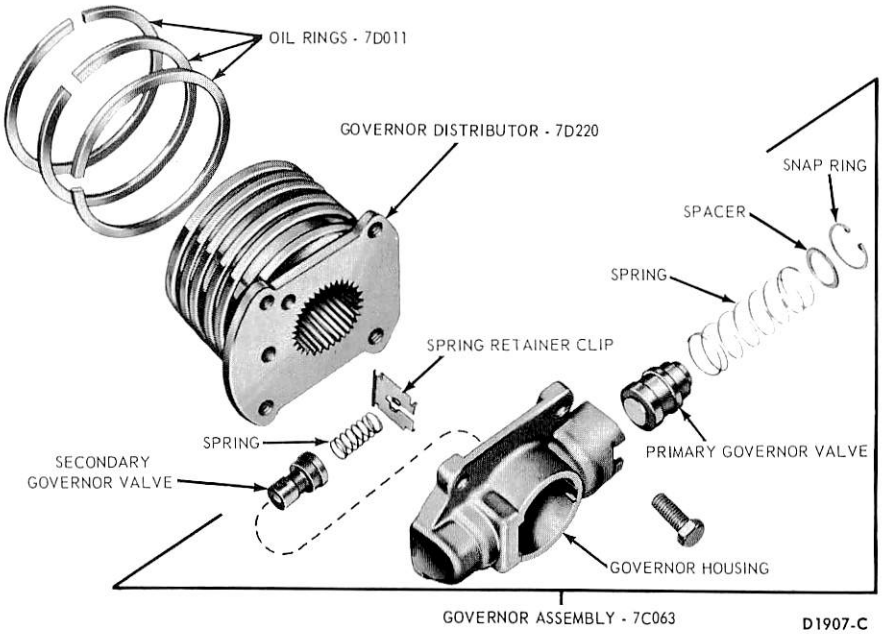

FIG. 56 Governor Disassembled

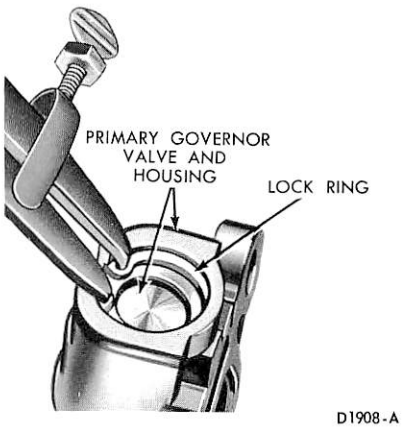

FIG. 57 Removing or Installing Governor Valve Retaining Ring

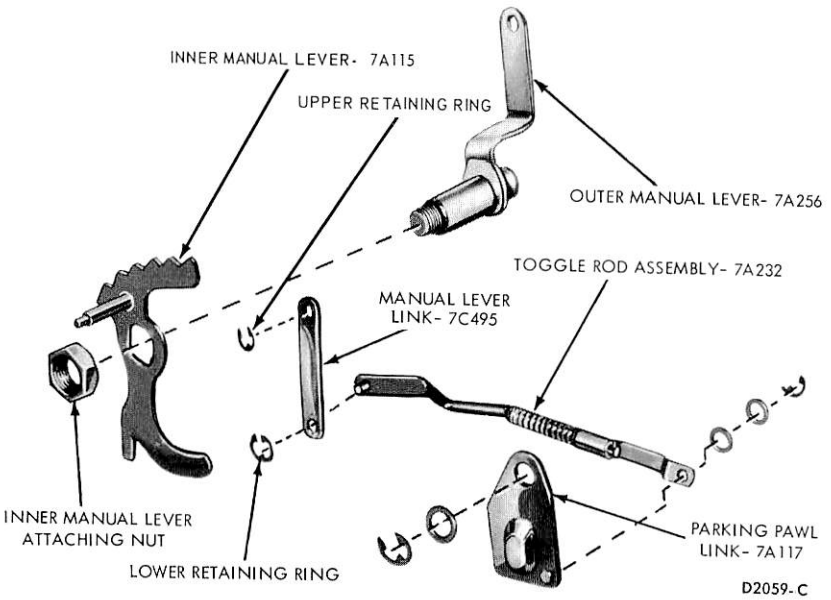

FIG. 58 Transmission Case Internal Linkage

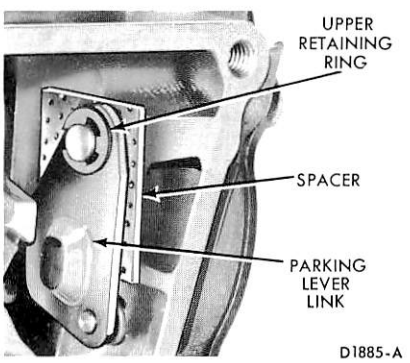

FIG. 59 Parking Pawl Link

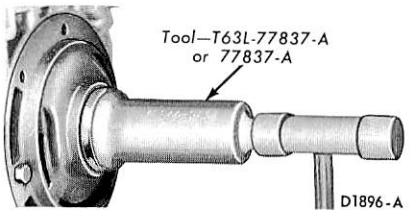

FIG. 60 Removing or Installing Parking Pawl Link

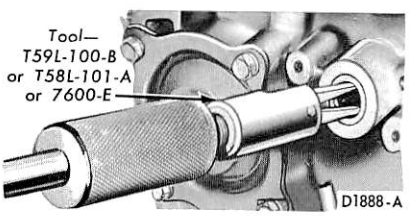

FIG. 61 Removing Manual Lever Seal

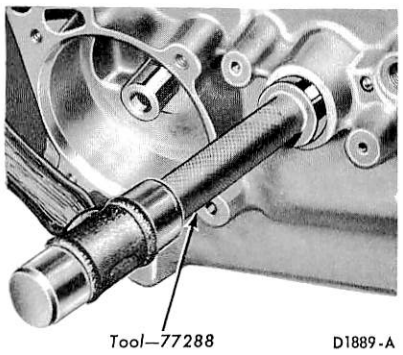

FIG. 62 Installing Manual Lever Seal

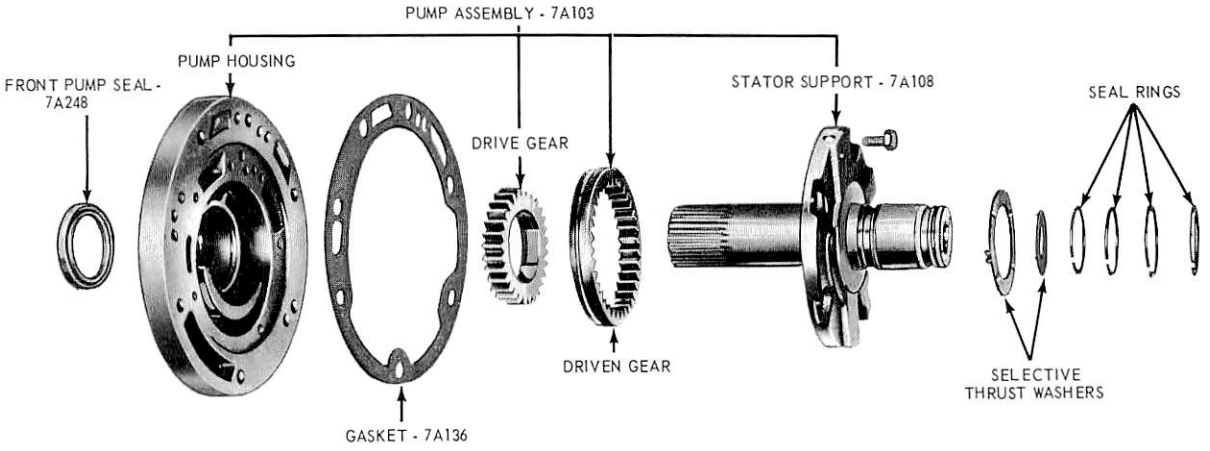

FIG. 63 Front Pump and Stator Support Disassembled

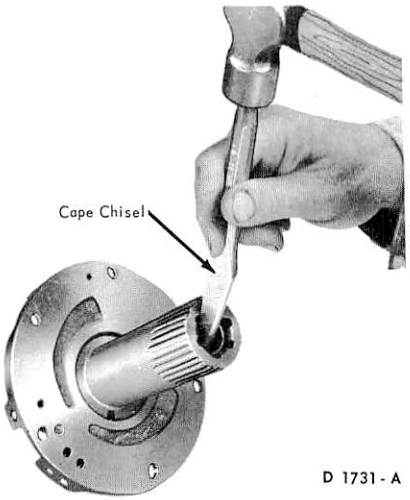

FIG. 64 Removing Stator Support Bushing

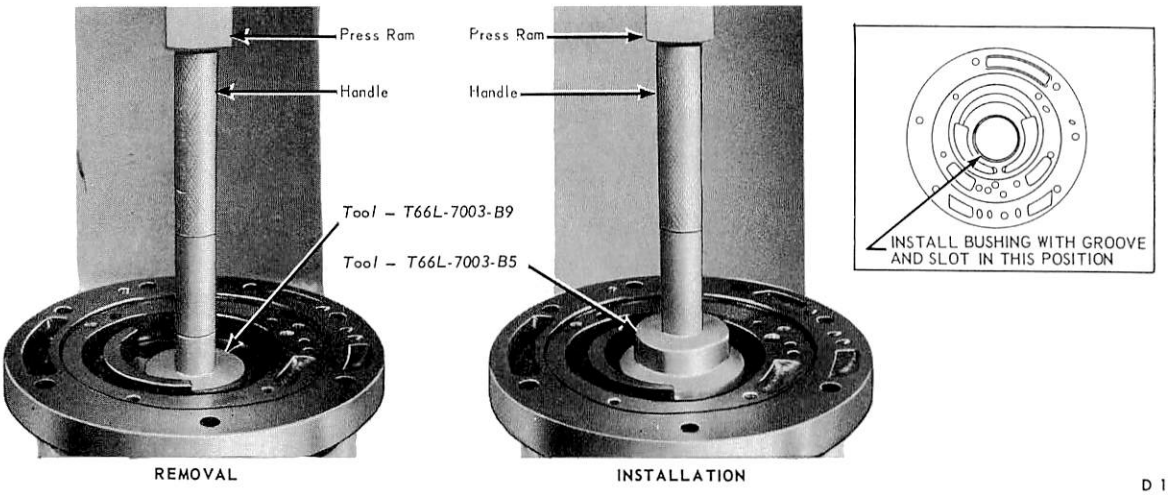

FIG. 65 Replacing Front Pump Housing Bushing

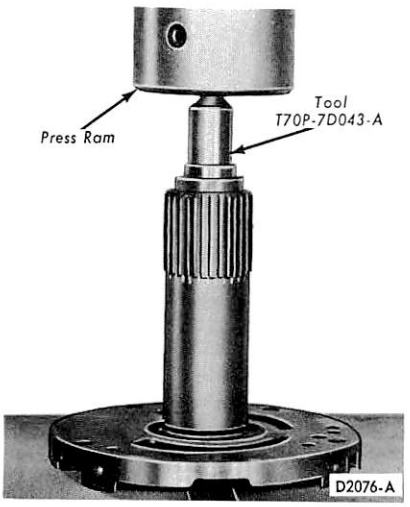

FIG. 66 Installing Stator Support Bushings

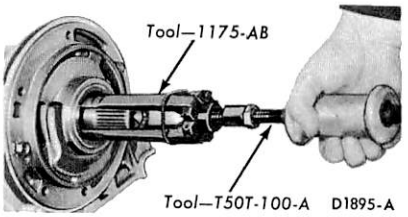

FIG. 67 Removing Front Pump Seal

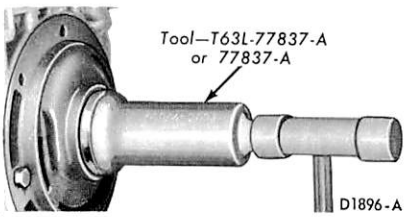

FIG. 68 Installing Front Pump Seal

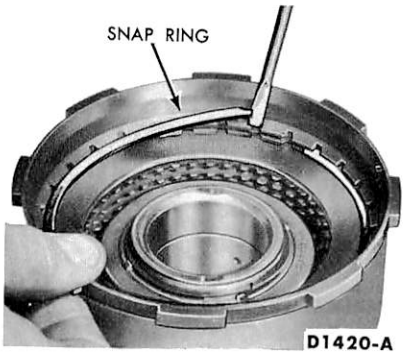

FIG. 69 Removing or Installing Reverse-High Pressure Plate Snap Ring

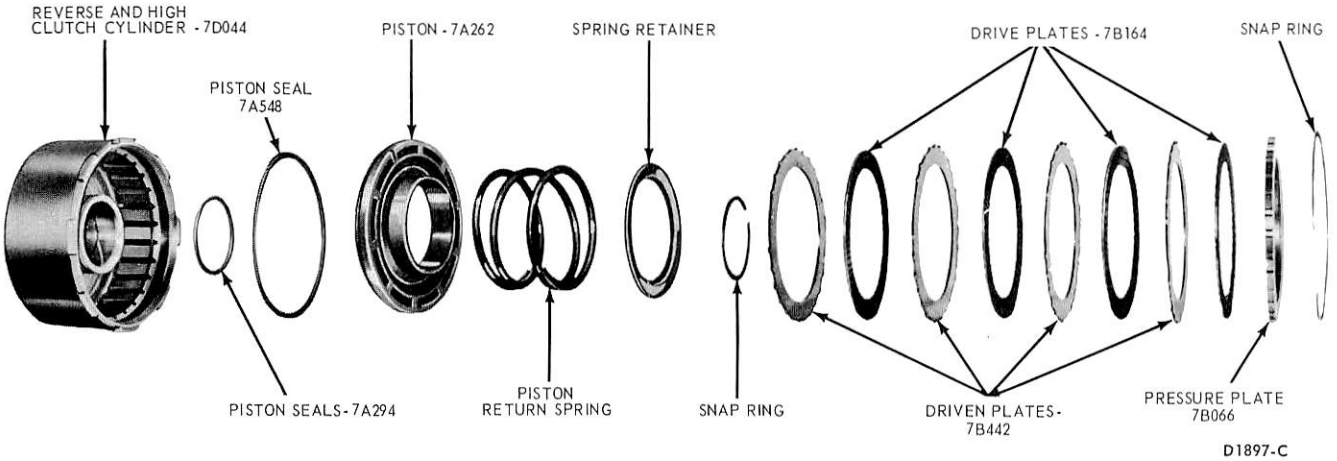

FIG. 70 Reverse-High Clutch Disassembled—Typical

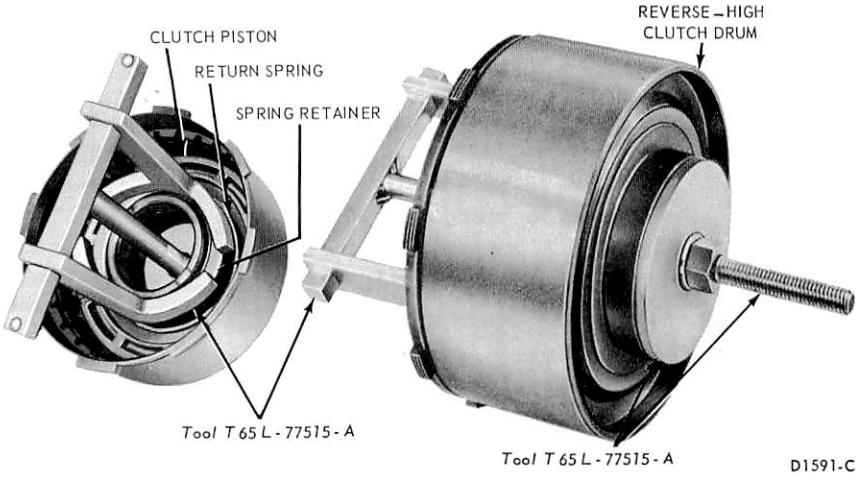

FIG. 71 Removing or Installing Reverse-High Clutch Piston Spring Snap Ring

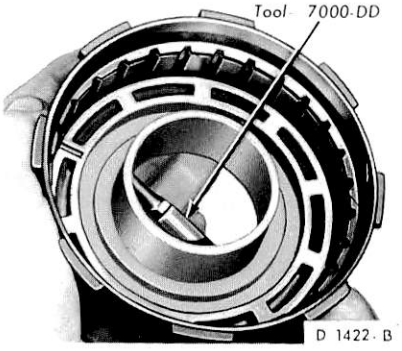

FIG. 72 Removing Reverse-High Clutch Piston

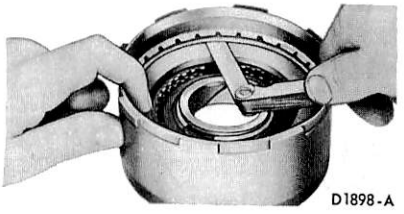

FIG. 73 Checking Reverse-High Clutch Snap Ring Clearance

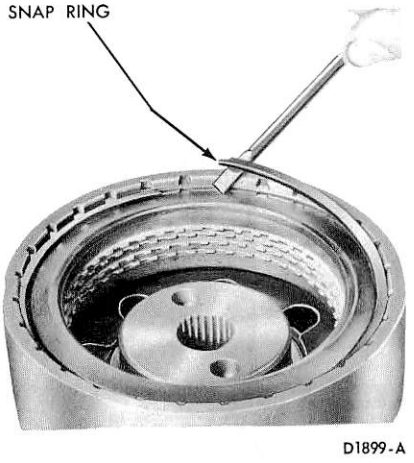

FIG. 74 Removing or Installing Forward Clutch Pressure Plate Snap Ring

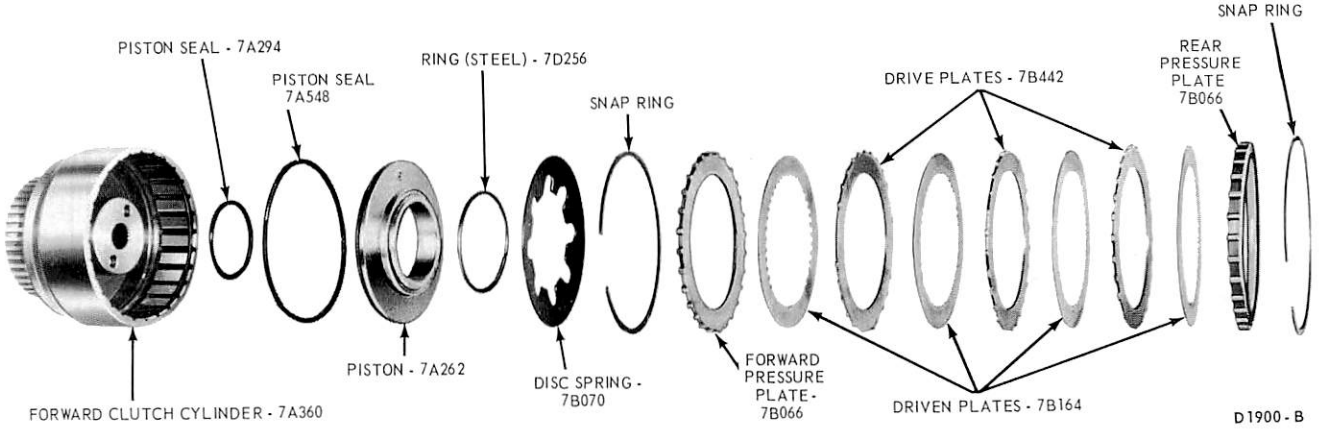

FIG. 75 Forward Clutch disassembled—Typical



FIG. 76 Removing or Installing Disc Spring Snap Ring

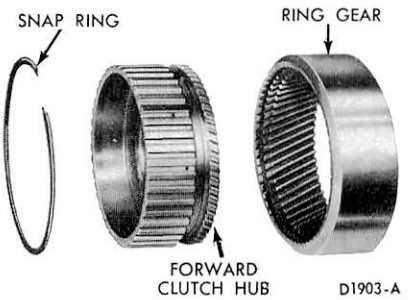

FIG. 79 Forward Clutch Hub and Ring Gear Disassembled

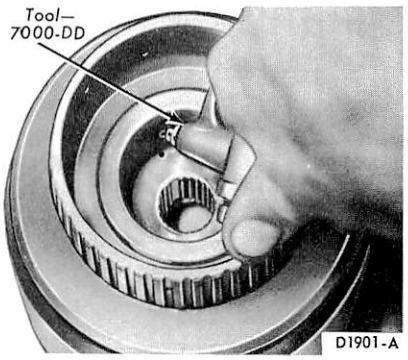

FIG. 77 Removing Forward Clutch Piston

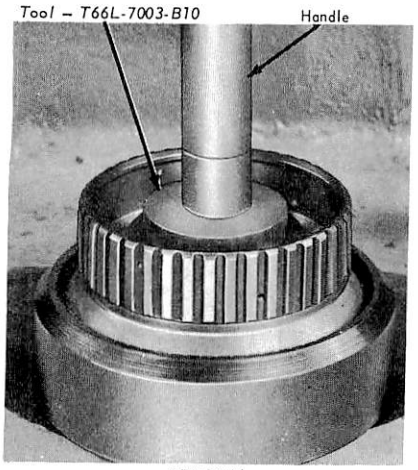

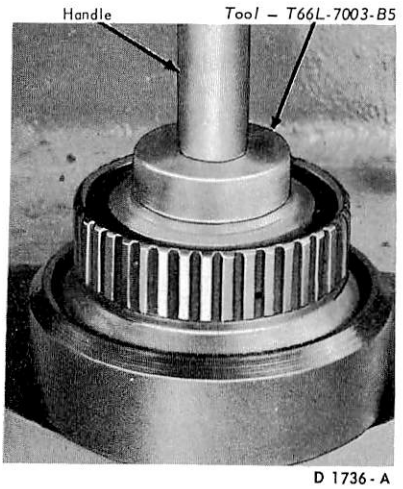

FIG. 80 Replacing Forward Clutch Hub Bushing

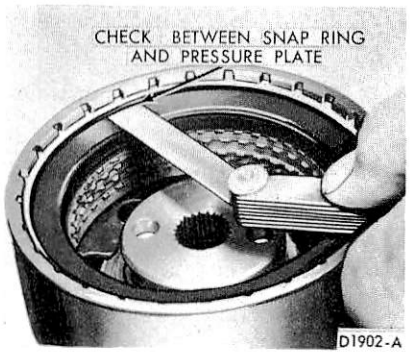

FIG. 78 Checking Forward Clutch Snap Ring Clearance

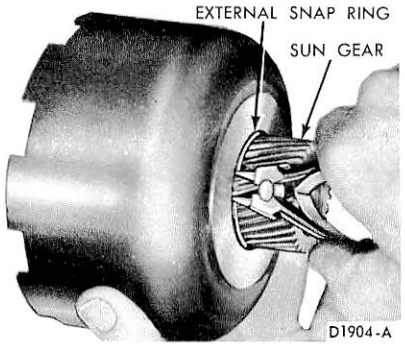

FIG. 81 Removing or Installing Sun Gear External Snap Ring

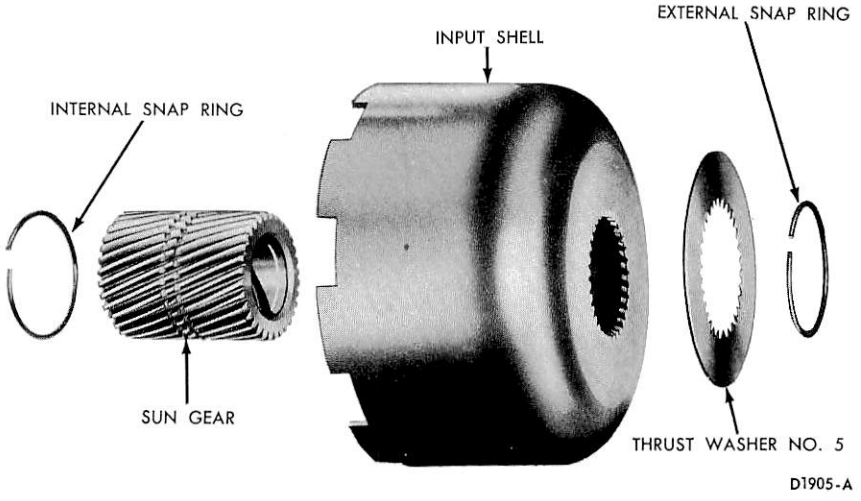

FIG. 82 Input Shell and Sun Gear Disassembled

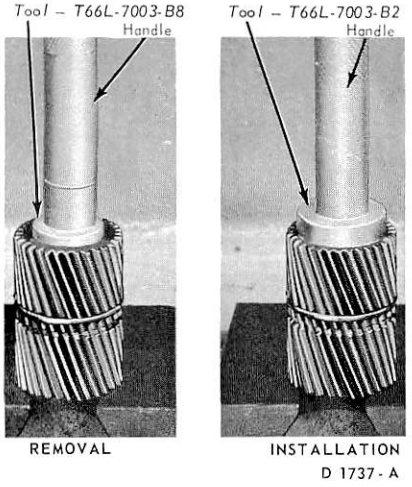

FIG. 83 Replacing Sun Gear Bushing

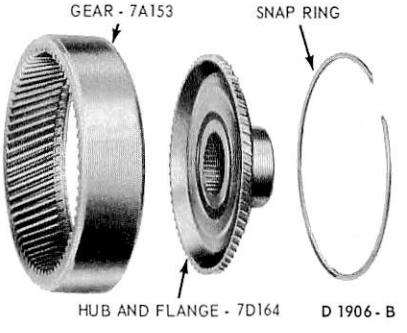

FIG. 84 Reverse Ring Gear and Hub Disassembled

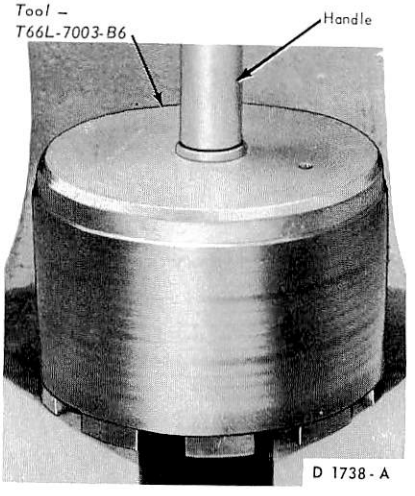

FIG. 85 Installing Low and Reverse Brake Drum Bushing

SPECIFICATIONS

APPROXIMATE REFILL CAPACITIES – C4 TRANSMISSION

Trans. Model	U.S. Measure	Imp. Measure
F-100-250 and Econoline	10 1/4	8 1/4
Bronco	11	9 1/4

CHECKS AND ADJUSTMENTS – C4 TRANSMISSION

Operation	Specification
Transmission End Play	0.008-0.042 inch (Selective Thrust Washers Available
Turbine and Stator End Play	New or Rebuilt 0.023 Max. Used 0.040 Max.
Intermediate Band Adjustment	Remove and discard lock nut. Adjust screw to 10 ft-lbs torque, then back off 1-3/4 turns. Install new lock nut and torque to specification.
Low Reverse Band Adjustment	Remove and discard lock nut. Adjust screw to 10 ft-lbs torque, then back off 3 turns, Install new lock nut and torque to specification.
Forward High Clutch Pressure Plate to Snap Ring Clearance	0.025-0.050
Reverse High Clutch Pressure Plate to Snap Ring Clearance	0.050-0.071
Selective Snap Ring Thickness	0.050-0.054, 0.064-0.068, 0.078-0.082, 0.092-0.096

CLUTCH PLATES – C4 TRANSMISSION

	Forward Clutch			Reverse Clutch		
Transmission Model	External Spline	Internal Spline (Comp.)	Free Pack Clearance (Inches)	External Spline (Steel)	External Spline (Comp.)	Free Pack Clearance (Inches)
PEA	4	5	0.025–0.050	4	4	0.050–0.071

SELECTIVE TRUST WASHERS – C4 TRANSMISSION

Thrust Washer No. 1		Thrust Washer No. 2	
Nylon Thrust Washer W/Tangs	Color Of Washer	No. Stamped On Washer	Metal Thrust Washer
0.053-0.0575	Red	1	0.041-0.043
0.070-0.074	Green	2	0.056-0.058
0.087-0.091	Natural (White)	3	0.073-0.075
0.104-0.108	Black		
0.121-0.125	Yellow	Spacer	0.032-0.036 ①

① This is a selective spacer. The spacer must be installed next to the stator support to obtain correct end play.

TORQUE LIMITS – C4 TRANSMISSION

Item	Ft-Lbs	Item	Ft-Lbs	Item	In-Lbs
Converter to Flywheel	23-28	Pressure Gauge Tap	9-15	Lower to Upper Valve Body	40-55
Converter Hsg. to Trans. Case	28-40	Band adj. Screw Locknut to Case	35-45	Reinforcement Plate to Body	40-55
Front Pump to Trans. Case	28-40	Yoke to Output Shaft	60-120	Screen and Lower to Upper Valve Body	40-55
Overrunning Clutch Race to Case	13-20	Reverse Servo Piston to Rod	12-20	Neutral Switch to Case (Econoline)	55-75
Oil Pan to Case	12-16	Converter Drain Plug	20-30	Neutral Switch to Column	20
Rear Servo Cover to Case	12-20	Manual Valve Inner Lever to Shaft	30-40	Separator Plate to Lower Valve Body	40-55
Stator Support to Pump	12-20	Downshift Lever to Shaft	12-16	Control Assy. to Case	80-120
Converter Cover to Converter Hsg.	12-16	Filler Tube to Engine	20-25	Gov. Body to Collector Body	80-120
Intermediate Servo Cover to Case	16-22	Filler Tube to Pan	32-42	Cooler Line Fittings	80-120
Diaphragm Assy. to Case	15-23	Transmission to Engine	40-50	Detent Spring to Lower Valve Body	80-120
Extension Assy. to Trans. Case	28-40	Distributor Sleeve to Case	12-20	Upper Valve Body to Lower Valve Body	80-120
Engine to Transmission	23-33	T.R.S. Switch to Case	4-8	Oil Tube Connector	80-120
		Transfer Case to Transmission	21-30	End Plates to Body	20-35

SPECIAL SERVICE TOOLS – C4 TRANSMISSION

Tool No.	Description	Tool No.	Description
T50T-100-A	Impact Hammer	T61L-7657-A or B	Transmission Extension Housing Bushing Replacer
T58L-101-A	Puller Attachment	T57P-7697-A	Transmission Extension Housing Oil Seal Remover
TOOL-1175-AB	Oil Seal Remover (Head)	T57P-7697-B	Transmission Extension Housing Bushing Replacer
TOOL-4201-C	Diff. Backlash & Runout Ga.	T59P-77067	Dial Indicator Support Fixture
T57L-500-A	Trans. Holding Fixture	TOOL-77288	Control Shaft Seal Replacer
T65E-6000-J	Engine Support Bar	T71P-77370-D	Band Adjustment Socket
TOOL-7000-DD	Air Nozzle Rubber Tip Assy.	T71P-77370-H	Front Band Adjust. Torque Wrench
T66L-7003-B	Auto. Trans. Bushing Kit–Remover and Replacer	TOOL-77530-A	Clutch Assy. Fixture
T70P-70043	Stator Support Bushing Installer	T65L-77515-A	Auto. Trans. Clutch Spring Compr.
T64E-7052-A	Transmission Ext. Hsg. Oil Sl. Repl.	T57L-77820-A	Auto. Trans. 400 Lb. Pressure Ga.
T65P-7B456	Clutch Race to Case Bolts Socket	T63L-77837-A	Front Pump Seal Replacer

CD2178-D

PART 17-10 C6 Automatic Transmission

Applies to F-100, F-250, F-350 and B-600-700 and F-600 Only

COMPONENT INDEX	Page	COMPONENT INDEX	Page
CONTROL VALVE BODY		INTERMEDIATE BAND	
Cleaning and Inspection	01-10	Adjustment	10-04
Disassembly and Assembly	10-11	INTERMEDIATE SERVO	
Removal and Installation	10-06	Cleaning and Inspection	01-10
DESCRIPTION	10-01	Disassembly and Assembly	10-12
DOWNSHIFT LINKAGE		Removal and Installation	10-06
Disassembly and Assembly	10-14	LOW-REVERSE CLUTCH PISTON	
EXTENSION HOUSING BEARING		Disassembly and Assembly	10-22
Cleaning and Inspection	01-10	MANUAL LINKAGE	
Removal and Installation	10-06	Disassembly and Assembly	10-14
EXTENSION HOUSING BUSHING		ONE-WAY CLUTCH	
Removal and Installation	10-06	Cleaning and Inspection	01-12
EXTENSION HOUSING REAR SEAL		Disassembly and Assembly	10-20
Removal and Installation	10-06	OUTPUT SHAFT HUB AND RING GEAR	
FORWARD CLUTCH		Disassembly and Assembly	10-20
Cleaning and Inspection	01-11	PARKING PAWL LINKAGE	
Disassembly and Assembly	10-17	Disassembly and Assembly	10-15
FRONT PUMP		REVERSE-HIGH CLUTCH	
Cleaning and Inspection	01-11	Cleaning and Inspection	01-11
Disassembly and Assembly	10-16	Disassembly and Assembly	10-16
GOVERNOR		SERVO APPLY LEVER	
Cleaning and Inspection	01-10	Disassembly and Assembly	10-15
Disassembly and Assembly	10-14	SPECIFICATIONS	10-24
Removal and Installation	10-08	TRANSMISSION (Complete)	
INPUT SHELL AND SUN GEAR		Disassembly and Assembly	10-08
Disassembly and Assembly	10-19	Removal and Installation	10-04

DESCRIPTION

Figure 1 shows the location of the converter, front pump, clutches, gear train and most of the internal parts used in the C6 transmission. The identification tag (Fig. 2), attached to the intermediate servo lower front cover bolt, includes the model prefix, suffix and serial number. The first line on the tag shows the transmission model prefix and suffix. A number appearing after the suffix (Fig. 2) indicates that the internal parts in the transmission have been changed after initial production start-up. For example, a PGB-AK model transmission that has been changed internally would read PGB-AK1. Both transmissions are basically the same, but some service parts in the PGB-AK1 transmission are slightly different than the PGB-AK transmission. Therefore, it is important that the codes on the transmission identification tag be checked when ordering parts or making inquiries about the transmission.

The C6 transmission is a three speed unit capable of providing automatic

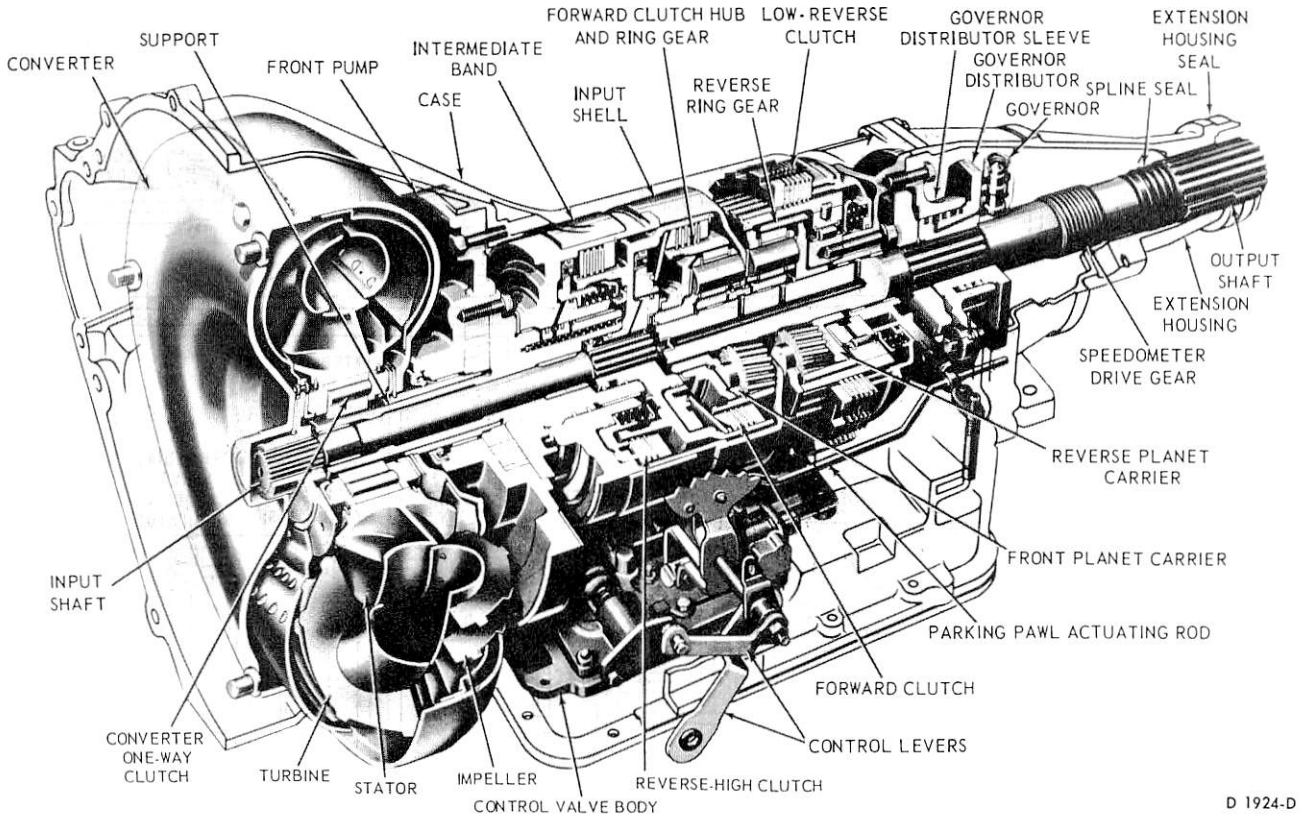

FIG. 1 C6 Automatic Transmission—Sectional

upshifts and downshifts through the three forward gear ratios, and also capable of providing manual selection of first and second gears. The hydraulic control system schematic is shown in Figure 3. The converter housing and the fixed splines which engage the splined OD of the low-reverse clutch steel plates, are both cast integrally into the case.

Only one (intermediate) band is used in the C6 transmission. This along with the forward clutch is used to obtain intermediate gear.

The only adjustment on the transmission proper is the intermediate band.

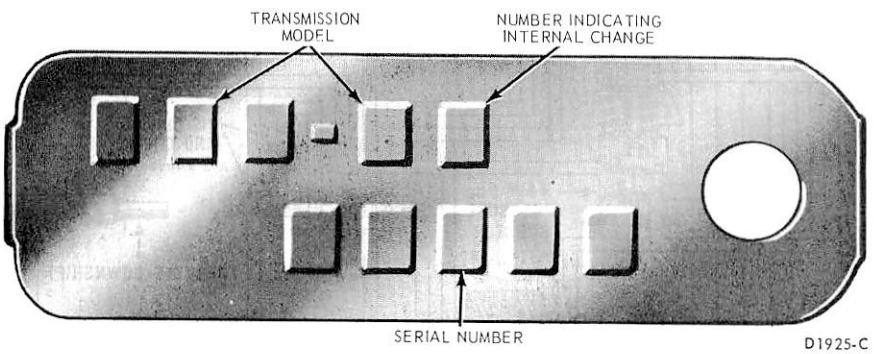

FIG. 2 Identification Tag

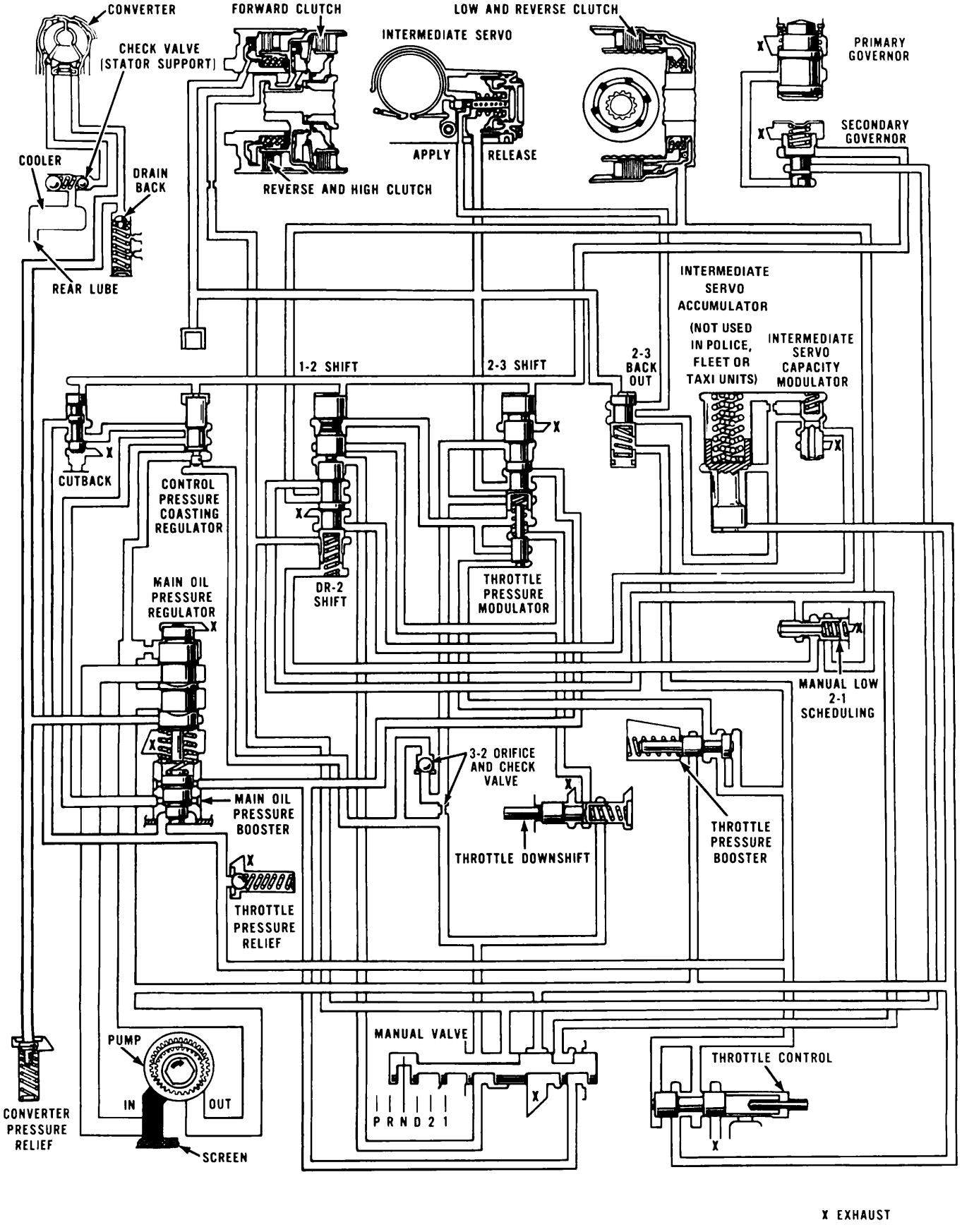

FIG. 3 Hydraulic Control System

ADJUSTMENTS

To prevent damage to the transmission and to assure proper band adjustment, it is essential that the tools and procedures described below are used whenever the band is adjusted.

INTERMEDIATE BAND ADJUSTMENT

1. Raise the vehicle on a hoist or jack stands.
2. Clean all the dirt from the band adjusting screw area. Remove and discard the locknut.
3. Install a new locknut and tighten the adjusting screw to 10 ft-lbs torque (Fig. 4).

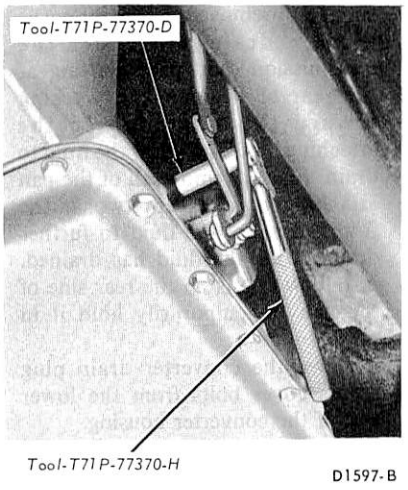

FIG. 4 Adjusting Intermediate Band

4. **Back off the adjusting screw exactly 1 1/2 turns.**
5. Hold the adjusting screw from turning and torque the locknut to specification.
6. Lower the vehicle.

REMOVAL AND INSTALLATION

TRANSMISSION

F-100, F-250 AND F-350

Removal

1. Drive the vehicle on a hoist, but do not raise at this time.
2. Remove the two upper converter housing-to-engine bolts.
3. Remove the bolt securing the fluid filler tube to the engine cylinder head.
4. Raise the vehicle on a hoist or stands.
5. Place the drain pan under the transmission fluid pan. Starting at the rear of the pan and working toward the front, loosen the attaching bolts and allow the fluid to drain. Finally remove all of the pan attaching bolts except two at the front, to allow the fluid to further drain. After the fluid has drained, install two bolts on the rear side of the pan to temporarily hold it in place.
6. Remove the converter drain plug access cover from the lower end of the converter housing.
7. Remove the converter-to-flywheel attaching nuts. Place a wrench on the crankshaft pulley attaching bolt to turn the converter to gain access to the nuts.
8. With the wrench on the crankshaft pulley attaching bolt, turn the converter to gain access to the converter drain plug. Then, remove the plug. Place a drain pan under the converter to catch the fluid. After the fluid has been drained from the converter, reinstall the plug.
9. Disconnect the crankshaft.
10. Disconnect the speedometer cable from the bearing retainer.
11. Disconnect the throttle and manual linkage rods from the levers at the transmission.
12. Disconnect the oil cooler lines from the transmission.
13. Remove the vacuum hoses from the vacuum unit. Remove the vacuum line retaining clips.
14. Disconnect the cable from the terminal on the starter motor. Remove the three attaching bolts and remove the starter motor.
15. Remove the two engine rear support crossmember-to-frame attaching bolts.
16. Remove the two engine rear support-to-extension housing attaching bolts.
17. Remove the eight bolts securing the No. 2 crossmember to the frame side rails.
18. Raise the transmission with a transmission jack and remove both crossmembers.
19. Secure the transmission to the jack with the safety chain.
20. Remove the remaining converter housing-to-engine attaching bolts.
21. Move the transmission away from the engine. Lower the transmission and remove it from under the vehicle.

Installation

1. Torque the converter drain plug to specification.
2. Position the converter to the transmission making sure the converter drive flats are fully engaged in the pump gear.
3. With the converter properly installed, place the transmission on the jack. Secure the transmission to the jack with the chain.
4. Rotate the converter so that the studs and drain plug are in alignment with their holes in the flywheel.
5. With the transmission mounted on a transmission jack, move the converter and transmission assembly forward into position, using care not to damage the flywheel and the converter pilot. **The converter must rest squarely against the flywheel. This indicates that the converter pilot is not binding in the engine crankshaft.**
6. Install and torque the converter housing-to-engine attaching bolts to specification.
7. Remove the transmission jack safety chain from around the transmission.
8. Position the No. 2 crossmember to the frame side rails. Install and torque the attaching bolts to specifications.
9. Position the engine rear support crossmember to the frame side rails. Install the rear support to extension housing mounting bolts and torque the bolts to specification.
10. Lower the transmission and remove the jack.
11. Secure the engine rear support crossmember to the frame side rails

with the attaching bolts and torque them to specification.
12. Connect the vacuum lines to the vacuum diaphragm making sure that the lines are in the retaining clips.
13. Connect the oil cooler lines to the transmission.
14. Connect the throttle and manual linkage rods to their respective levers on the transmission.
15. Connect the speedometer cable to the bearing retainer.
16. Secure the starter motor in place with the attaching bolts. Connect the cable to the terminal on the starter.
17. Install a new O-ring on the lower end of the transmission filler tube and insert the tube in the case.
18. Secure the converter-to-flywheel attaching nuts and torque them to specification.
19. Install the converter housing dust shield and secure it with the attaching bolts.
20. Connect the drive shaft.
21. Adjust the shift linkage.
22. Lower the vehicle. Then install the two upper converter housing-to-engine bolts and torque them to specification.
23. Position the transmission fluid filler tube to the cylinder head and secure with the attaching bolt.
24. Fill the transmission to the correct level with the specified lubricant.

B-600-700 AND F-600

Removal

1. From inside the vehicle, remove the six floor covering moulding retaining screws from the left side of the vehicle and remove the moulding. Position the floor covering out of the way.
2. Remove the three body bolt cover retaining screws and remove the cover. Remove the body bolt and nut.
3. Remove the two rear body bolt covers and loosen the body bolts substantially.
4. Raise the left side of the body with a jack and place a 1 5/8 inch piece of wood between the frame and body mounting surfaces. Lower the jack.
5. Connect a remote control starter button to the solenoid.
6. Remove the rear support-to-crossmember bolts and nuts.
7. With a transmission jack positioned at the rear of the engine, raise the engine and transmission high enough to remove the rear supports.
8. Place a drain pan under the transmission fluid pan. Starting at the rear of the pan and working toward the front, loosen the attaching bolts and allow the fluid to drain. Finally remove all of the pan attaching bolts except two at the front, to allow the fluid to further drain. After the fluid has drained, install two bolts on the rear side of the pan to temporarily hold it in place.
9. Remove the converter drain plug access cover bolts from the lower end of the converter housing.
10. Remove the converter-to-flywheel attaching nuts. Crank the engine to turn the converter to gain access to the nuts.
11. Crank the engine to gain access to the converter drain plug. Then, remove the plug. Place a drain pan under the converter to catch the fluid. After the fluid has been drained from the converter, reinstall the plug.
12. Disconnect the starter cable from the starter. Remove the three starter retaining bolts and remove the starter from the vehicle.
13. Disconnect the drive shaft at the transmission and position it out of the way.
14. Disconnect the speedometer cable.
15. Disconnect the parking brake linkage.
16. Disconnect the shift cable from the manual lever at the transmission.
17. Remove the two bolts that secure the shift cable bracket to the converter housing and position the cable and bracket out of the way.
18. Disconnect the downshift rod from the transmission downshift lever.
19. Disconnect the vacuum hoses from the vacuum diaphragm at the rear of the transmission. Remove the vacuum lines from the retaining clips at the transmission.
20. Disconnect the oil cooler lines from the transmission case.
21. Remove the bolt that secures the transmission filler tube to the cylinder block. Lift the filler tube and dipstick from the transmission.
22. Position a transmission jack under the transmission and secure the transmission to the jack with safety chain.
23. Remove the converter housing-to-engine attaching bolts.
24. Move the transmission assembly away from the engine. Tilt the assembly forward, and with the jack, guide it over the crossmember. Lower the transmission and remove it from the vehicle.
25. Remove the converter and mount the transmission in a holding fixture.

Installation

1. Torque the converter drain plug to specification.
2. Position the converter to the transmission making sure the converter drive flats are fully engaged in the pump gear.
3. With the converter properly installed, place the transmission on the jack. Secure the transmission to the jack with safety chain.
4. Rotate the converter so that the studs and drain plug are in alignment with their holes in the flywheel.
5. With the transmission mounted on the transmission jack, raise the transmission and position it over the crossmember to the engine. **Be careful not to damage the flywheel and converter pilot. The converter must rest squarely against the flywheel. This indicates that the converter pilot is not binding in the engine crankshaft.**
6. Install the converter housing-to-engine attaching bolts. Torque the bolts to specification. Remove the safety chain from the transmission.
7. Raise the engine and transmission and install the rear supports. With the supports in place, lower the assembly and install and torque the rear support-to-crossmember bolts and nuts.
8. Lower the jack and remove it from under the vehicle.
9. Install a new O-ring on the lower end of the transmission filler tube. Insert the tube in the transmission case and secure the tube to the engine with the attaching bolt.
10. Connect the vacuum lines to the vacuum diaphragm making sure that the lines are secured in the retaining clips.
11. Connect the oil cooler lines to the transmission case.
12. Connect the downshift rod to the lever on the transmission.
13. Position the shift cable bracket to the converter housing and install the attaching bolts.
14. Connect the shift cable to the manual lever at the transmission.
15. Connect the speedometer cable.
16. Connect the parking brake linkage.
17. Install the drive shaft.
18. Position the starter to the converter housing and secure it with the

attaching bolts. Connect the starter cable to the starter.
19. Install the torque converter-to-flywheel attaching nuts and torque them to specification.
20. Install the converter drain plug access cover. Torque the bolts to specification.
21. Disconnect the remote control starter button.
22. Using a jack, raise the left side of the body and remove the wood block previously installed. Lower the body to the frame and install the body bolt and nut. Position the cover over the body bolt and install the three attaching screws.
23. Tighten the two rear body bolts and nuts. Install the body bolt covers.
24. Reposition the floor covering. Install the moulding and secure with the six attaching screws.
25. Fill the transmission to the correct level with the specified fluid.
26. Adjust the transmission control linkage as required.
27. Check the transmission, converter assembly and oil cooler lines for leaks.

CONTROL VALVE BODY

Removal
1. Raise the vehicle on a hoist or jack stands.
2. Place a drain pan under the transmission and loosen the bolts to drain the fluid from the transmission.
3. Remove the transmission pan attaching bolts from both sides and the rear to allow the fluid to drain further. Finally, remove the remainder of the attaching bolts. Remove the pan and gasket. Remove and discard the nylon shipping plug from the filler tube hole. This plug is used to retain transmission fluid within the transmission during shipment and should be discarded when the oil pan is removed.
4. Remove the valve body attaching bolts and remove the valve body from the case.

Installation
1. Position the valve body to the case making sure that the selector and downshift levers are engaged, then install and torque the attaching bolts to specification.
2. Clean the transmission pan and gasket surfaces thoroughly.
3. Using a new pan gasket, secure the pan to the transmission case and torque the attaching bolts to specification.

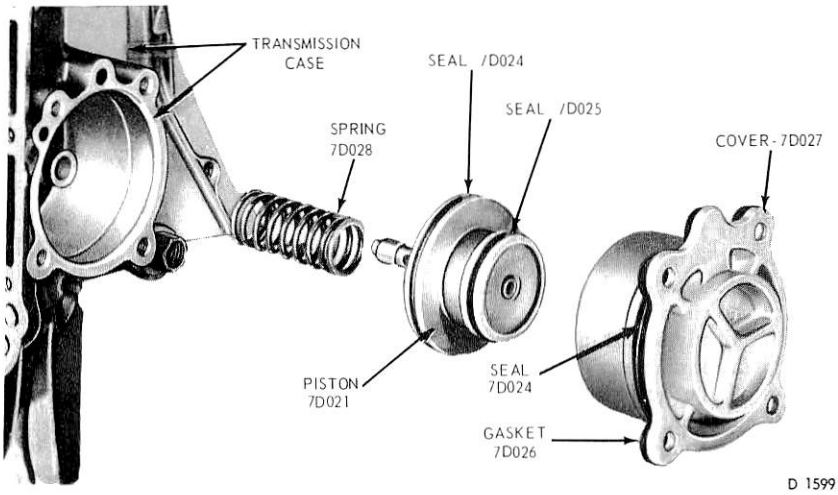

FIG. 5 Servo Disassembled

4. Lower the vehicle and fill the transmission to the correct level with the specified fluid.

INTERMEDIATE SERVO

Removal
1. Raise the vehicle on a hoist or jack stands.
2. Remove the bolt that secures the engine rear support to the crossmember.
3. Remove the two crossmember-to-frame attaching bolts.
4. Raise the transmission high enough to remove the weight from the crossmember and remove the crossmember.
5. Disconnect the muffler inlet pipe from the exhaust manifolds and allow the pipe to hang.
6. Place a drain pan under the servo. Remove the bolts that attach the servo cover to the transmission case.
7. Remove the cover, piston, spring and gasket from the case, screwing the band adjusting screw inward as the piston is removed. This insures that there will be enough tension on the band to keep the struts properly engaged in the band end notches while the piston is removed.

Seal Removal and Installation
1. Apply air pressure to the port in the servo cover to remove the piston and rod.
2. Remove the seals from the piston (Fig. 5).
3. Remove the seal from the cover.
4. Dip the new seals in transmission fluid.
5. Install the new seals on the piston and cover.
6. Coat two new gaskets with petroleum jelly and install the gaskets on the cover.
7. Dip the piston in transmission fluid and install it in the cover.

Installation
1. Position a new gasket on the servo cover.
2. Position the servo spring on the piston rod.
3. Insert the servo piston stem in the case. Secure the cover with the attaching bolts, taking care to back off the band adjusting screw as the cover bolts are tightened. Make sure that the service identification tag is in place.
4. Connect the muffler inlet pipe to the exhaust manifolds.
5. Raise the transmission high enough to install the crossmember. Secure the crossmember to the rear support with the attaching bolt. Lower the transmission as required to install the crossmember to frame attaching bolts. Torque the attaching bolts to specifications.
6. Remove the transmission jack.
7. Adjust the band as detailed in Adjustments.
8. Lower the vehicle and replenish the fluid as required.

EXTENSION HOUSING BEARING OR BUSHING AND REAR SEAL

F-100-250-350

Removal
1. Raise the vehicle and disconnect the the drive shaft at the transmission.
2. When only the rear seal needs replacing, carefully remove it with a tapered chisel or the tools shown in Fig. 6. Remove the bushing as shown in Fig. 7. **Use the bushing remover carefully so that the spline seal is not damaged.**

Installation

1. When installing a new bushing use the special tool shown in Fig. 8.
2. Before installing a new seal, inspect the sealing surface of the universal joint yoke for scores. If scores are found, replace the yoke.
3. Inspect the counterbore of the housing for burrs and if present, remove with crocus cloth.
4. Install the seal into the housing with the tool shown in Fig. 9. The seal should be firmly seated in the bore. Coat the inside diameter of the fiber portion of the seal with C1AZ-19590-B lubricant.
5. Coat the front universal joint spline with C1AZ-19590-B lubricant and install the drive shaft.

B-600-700 AND F-600

Removal

1. Raise the vehicle and disconnect the drive shaft. If a parking brake drum is mounted on the transmission, remove the drum. Remove the transmission output shaft yoke attaching nut and yoke.
2. Remove the five bolts securing the bearing retainer to the extension housing and remove the retainer.
3. Remove the seal from the retainer.
4. To remove the output shaft bearing from the extension housing, remove the bearing retaining snap ring.
5. Using a suitable puller, remove the bearing from the extension housing.

Installation

1. Using a suitable tool, install a new bearing in the extension housing. Install the bearing retaining snap ring.
2. Using a suitable tool, install a new seal in the bearing retainer.
3. Position a new bearing retainer-to-extension housing gasket on the extension housing.
4. Position the bearing retainer to the extension housing and install the attaching bolts. Install the brake drum, if so equipped.
5. Install the output shaft yoke and retaining nut. torque the attaching nut to specification.
6. Connect the drive shaft and lower the vehicle.

EXTENSION HOUSING

F-100-250-350

Removal

1. Raise the vehicle on a hoist or stands.
2. Disconnect the drive shaft from the rear axle flange and remove it from the transmission.
3. Disconnect the speedometer cable from the extension housing.

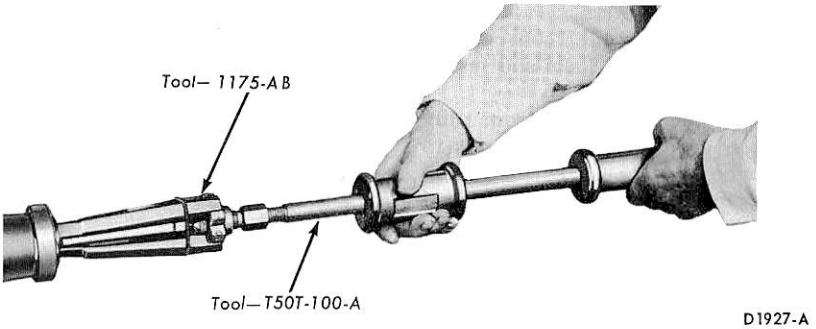

FIG. 6 Removing Extension Housing Seal

4. Remove the engine rear support-to-extension housing attaching bolts.
5. Place a jack under the transmission and raise it just enough to remove the weight from the engine rear support.
6. Remove the bolt that secures the engine rear support to the crossmember and remove the support.
7. Place a drain pan under the rear of the transmission case.
8. Lower the transmission and remove the extension housing attaching bolts. Slide the extension housing off the output shaft and allow the fluid to drain.

Installation

1. Clean the mounting surface on the transmission and on the extension housing. Position a new gasket on the transmission.
2. Hold the extension housing in place and secure it with the attaching bolts.
3. Raise the transmission high enough to position the engine rear support on the crossmember.
4. Secure the support to the crossmember with the attaching bolt and nut. Torque the bolt to specification.
5. Lower the transmission and remove the jack. Install and torque the engine rear support-to-extension housing attaching bolts to specification.
6. Secure the speedometer cable to the extension housing with the attaching bolt.
7. Install the drive shaft.
8. Fill the transmission to the correct level with the specified fluid.

B-600-700 AND F-600

Removal

1. Raise the vehicle on a hoist or jack stands.
2. Disconnect the drive shaft at the transmission output shaft yoke and position it out of the way. If a

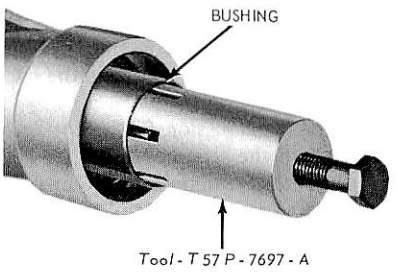

FIG. 7 Removing Extension Housing Bushing

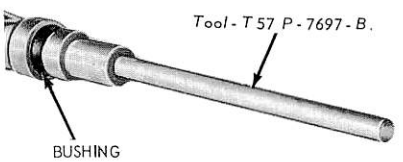

FIG. 8 Installing Extension Housing Bushing

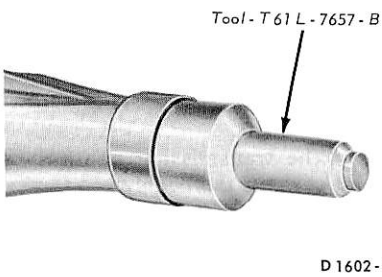

FIG. 9 Installing Extension Housing Seal

parking brake drum is mounted on the transmission, remove the drum.
3. Disconnect the speedometer cable from the extension housing bearing retainer.
4. Remove the engine rear support-to-extension housing attaching bolts.
5. Place a jack under the transmission and raise it just enough to remove the weight from the engine rear support.
6. Remove the bolt that secures the engine rear support to the crossmember and remove the support.
7. Place a drain pan under the rear of the transmission case.
8. Remove the transmission output shaft yoke attaching nut and yoke.
9. Remove the rear bearing retainer-to-extension housing bolts and remove the retainer.
10. Remove the rear bearing retaining snap ring and remove the rear bearing from the extension housing.
11. Remove the extension housing-to-case attaching bolts and slide the extension housing off the output shaft.

Installation

1. **Clean the mounting surface on the transmission and on the extension housing. Position a new gasket on the transmission.**
2. Hold the extension housing in place and secure it with the attaching bolts.

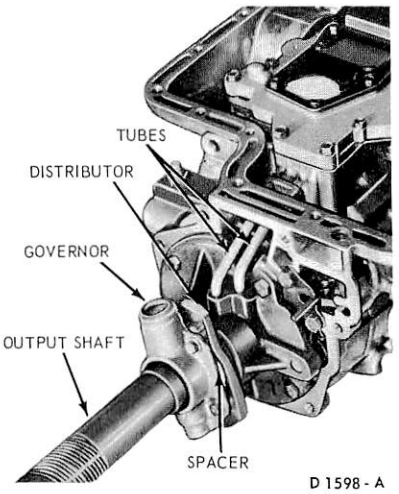

FIG. 10 Governor Installed

3. Install the bearing in the extension housing with Tool T53T-7065-B. Install the bearing retaining snap ring.
4. Position a new bearing retainer-to-extension housing gasket on the extension housing.
5. Position the bearing retainer to the extension housing and install the attaching bolts. Install the brake drum, if so equipped.
6. Install the output shaft yoke and retaining nut. Torque the attaching nut to specification.
7. Raise the transmission high enough to position the engine rear support on the crossmember.
8. Secure the support to the crossmember with the attaching bolt and nut. Torque the bolt to specification.
9. Lower the transmission and remove the jack. Install and torque the engine rear support-to-extension housing attaching bolts to specification.
10. Connect the speedometer cable to the bearing retainer.
11. Install the drive shaft.
12. Lower the vehicle and fill the transmission to the correct level with the specified fluid.

GOVERNOR

Removal

1. Remove the extension housing as outlined in this section of the manual.
2. Remove the governor housing-to-flange attaching bolts (Fig. 10).
3. Remove the governor from the flange.
4. Refer to Disassembly and Assembly of this Part for governor repair operations.

Installation

1. Secure the governor (Fig. 10) to the distributor flange with the attaching bolts. Torque the bolts to specification.
2. Reinstall the extension housing.

DISASSEMBLY AND ASSEMBLY

TRANSMISSION

During the repair of the subassemblies, certain general instructions which apply to all units of the transmission must be followed. Following these instructions will avoid unnecessary repetition.

All transmission parts must be handled carefully to avoid nicking or burring the bearing or mating surfaces.

Lubricate all internal parts of the transmission with clean automatic transmission fluid before assembling them.

Do not use any other lubricants except on gaskets and thrust washers. These may be coated with vaseline to facilitate assembly. Always use new gaskets and seals when assembling a transmission.

Tighten all bolts and screws to the recommended torque as outlined in the Specification Section.

Disassembly

1. Mount the transmission in holding fixture T64L-6001-A.
2. Remove the 17 fluid pan attaching bolts. Remove the pan and gasket.
3. Remove the 8 valve body attaching bolts (Fig. 11). Lift the valve body from the transmission case.
4. Attach a dial indicator to the front pump as shown in Fig. 12. Install Tool T61L-7657-B in the extension housing to center the shaft.
5. Pry the gear train to the rear of the case and at the same time, press the input shaft inward until it bottoms (Fig. 12). Set the dial indicator to read zero.
6. Pry the gear train forward (Fig. 12) and note the amount of gear train end play on the dial indicator. Record the end play to facilitate assembling the transmission. Remove the dial indicator from the pump and the tool from the extension housing.
7. Remove the vacuum diaphragm, rod and the primary throttle valve from the case. Slip the input shaft out of the front pump.
8. Remove the front pump attaching bolts. Pry the gear train forward as shown in Fig. 13 to remove the pump.
9. Loosen the band adjustment screw and remove the two struts.
10. Rotate the band 90 degrees counterclockwise to align the ends with the slot in the case (Fig. 14). Slide the band off the reverse-high clutch drum.
11. Remove the forward part of the gear train as an assembly as shown in Fig. 15.
12. Remove the large snap ring that secures the reverse planet carrier in

the low-reverse clutch hub. Lift the planet carrier from the drum.

13. Remove the snap ring (Fig. 16) that secures the reverse ring gear and hub on the output shaft. Slide the ring gear and hub off the shaft.
14. Rotate the low-reverse clutch hub in a clockwise direction and at the same time, withdraw it from the case.
15. Remove the reverse clutch snap ring from the case, then remove the clutch discs, plates and pressure plate from the case.
16. If a parking brake drum is mounted on the transmission, remove the drum. Remove the extension housing attaching bolts and vent tube from the case. Remove the extension housing and gasket.
17. Slide the output shaft assembly from the transmission case.
18. Remove the distributor sleeve attaching bolts and remove the sleeve, parking pawl gear and the thrust washer.

If the thrust washer is staked in place, use a sharp chisel and cut off the metal from behind the thrust washer. Be sure to clean the rear of the case with air pressure or a suitable solvent to remove any metal particles.

19. Compress the reverse clutch piston release spring with Tool T65L-77515-A (Fig. 17). Remove the snap ring. Remove the tool and the spring retainer.
20. Remove the one-way clutch inner race attaching bolts from the rear of the case. Remove the inner race from inside of the case.
21. Remove the reverse clutch piston from the case as shown in Fig. 18.

Assembly

1. Place the transmission case in a holding fixture.
2. Position the low-reverse clutch piston so that the check ball is in the 6 o'clock position (toward bottom of case next to oil pan) and tap the piston into place in the case with a clean rubber hammer.
3. Hold the one-way clutch inner race in position and install and torque the attaching bolts to specification.
4. Install a low-reverse clutch return spring in each pocket in the clutch piston. Press the springs firmly into the piston to prevent them from falling out.
5. Position the spring retainer over the springs and position the retainer snap ring in place on the one-way clutch inner race.
6. Install the compressing tool shown in Fig. 17 and compress the springs

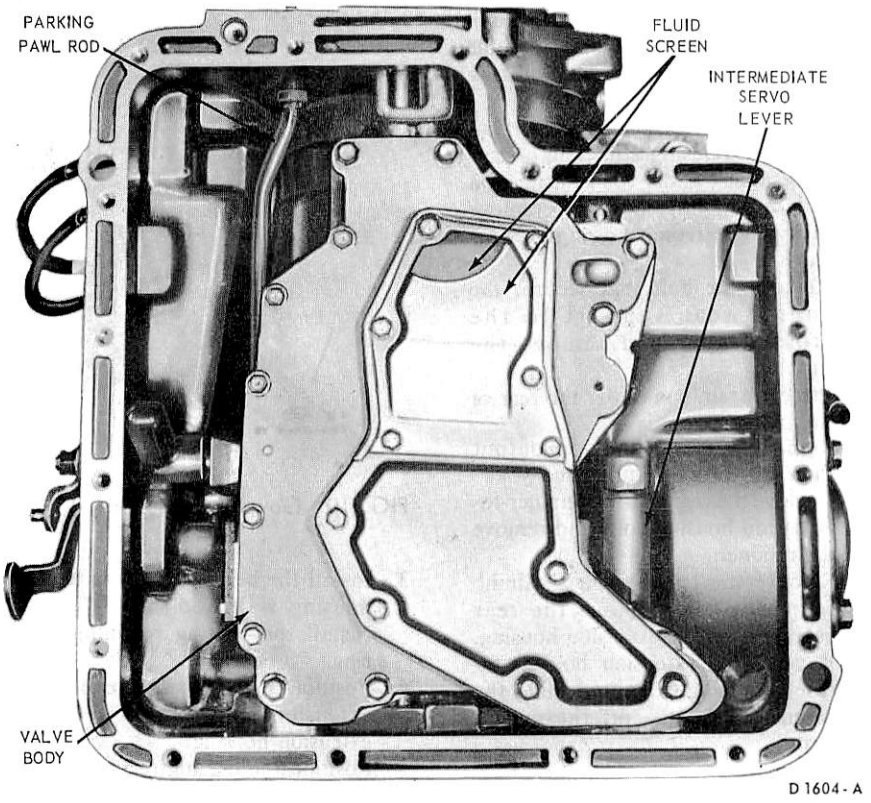

FIG. 11 Transmission With Pan Removed

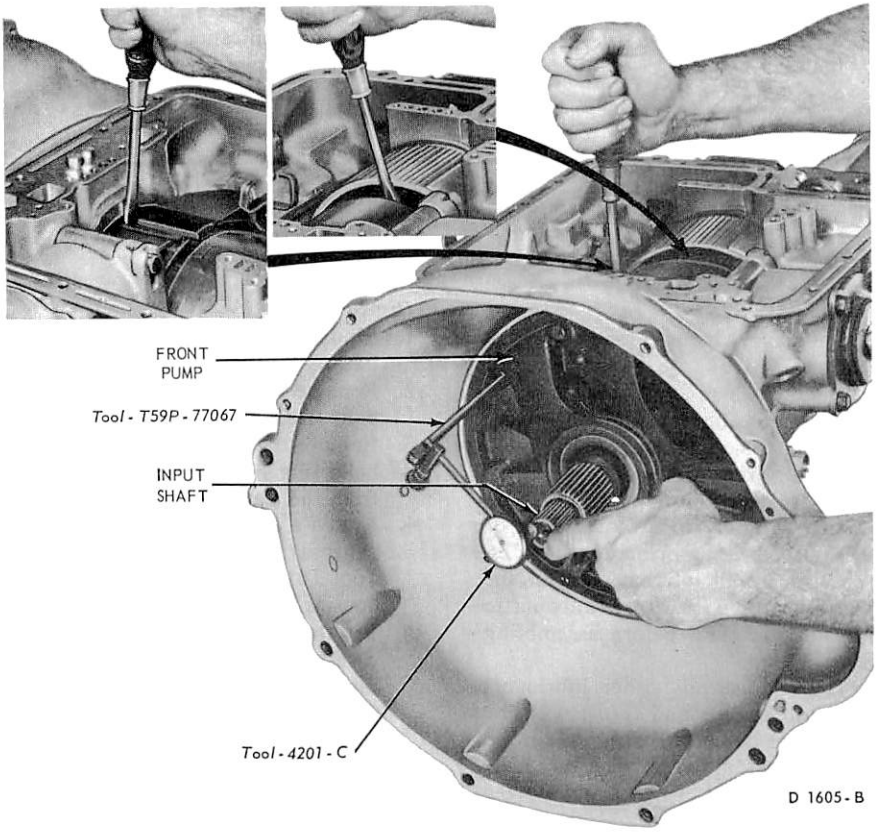

FIG. 12 Checking Gear Train End Play

just enough to install the low-reverse clutch piston retainer snap ring.

7. Install the snap ring, then remove the compressing tool.
8. Place the transmission case on the bench with the front end facing downward.
9. Position the parking gear thrust washer and the gear on the case (Fig. 27). **Do not restake the thrust washer.**

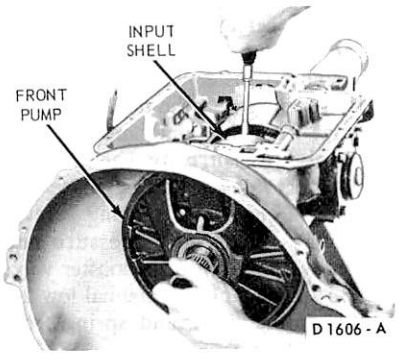

FIG. 13 Removing Front Pump

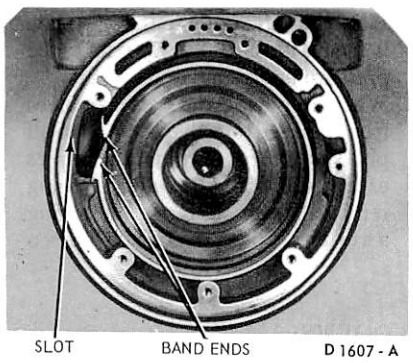

FIG. 14 Removing or Installing Band

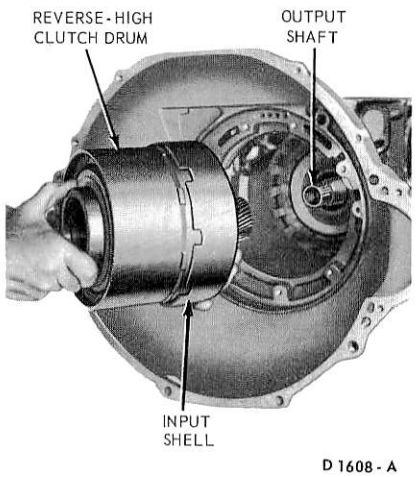

FIG. 15 Removing or Installing Forward Part of Gear Train

10. Position the oil distributor and tubes in place on the rear of the case. Install and torque the attaching bolts to specification.
11. Install the output shaft, and governor as an assembly.
12. Place a new gasket on the rear of the transmission case. Position the extension housing on the case and install the attaching bolts. Torque the attaching bolts to specification. Install the brake drum, if so equipped.
13. Place the case in the holding fixture.
14. Align the low-reverse clutch hub and one-way clutch with the inner race at the rear of the case. Rotate the low-reverse clutch hub clockwise while applying pressure to seat it on the inner race.
15. Install the low-reverse clutch plates, starting with a steel plate and following with friction and steel plates alternately. Retain them with vaseline. Refer to the Specifications Section for the number of plates required. If new composition plates are being used, soak them in clean transmission fluid for fifteen minutes before installation. Install the pressure plate and the snap ring. Test the operation of the low-reverse clutch by applying air pressure at the clutch pressure apply hole in the case.
16. Install the reverse planet ring gear thrust washer and the ring gear and hub assembly. Insert the snap ring in the groove in the output shaft.
17. Assemble the front and rear thrust washers onto the reverse planet assembly; retain with vaseline. Insert the assembly into the ring gear and install the snap ring.
18. Set the reverse-high clutch on the bench, with the front end facing down. Install the thrust washer on the rear end of the reverse-high clutch assembly. Retain the thrust washer with vaseline and insert the splined end of forward clutch into the open end of the reverse-high clutch so that the splines engage the direct clutch friction plates (Fig. 34).
19. Install the thrust washer and retain it with vaseline, on the front end of the forward planet ring gear and hub. Insert the ring gear into the forward clutch.
20. Install the thrust washer on the front end of the forward planet assembly. Retain the washer with vaseline and insert the assembly into the ring gear. Install the input shell and sun gear assembly.
21. Install the reverse-high clutch, forward clutch, forward planet assembly and drive input shell and sun gear as an assembly into the transmission case.
22. Insert the intermediate band into the case around the direct clutch cylinder. Install the struts and then tighten the band adjusting screw sufficiently to retain the band.

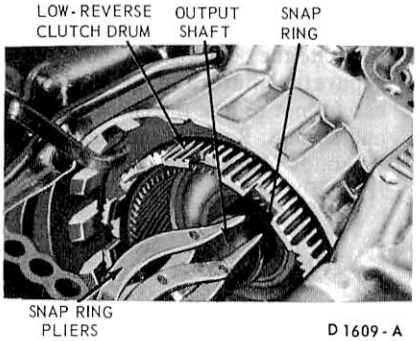

FIG. 16 Removing or Installing Reverse Ring

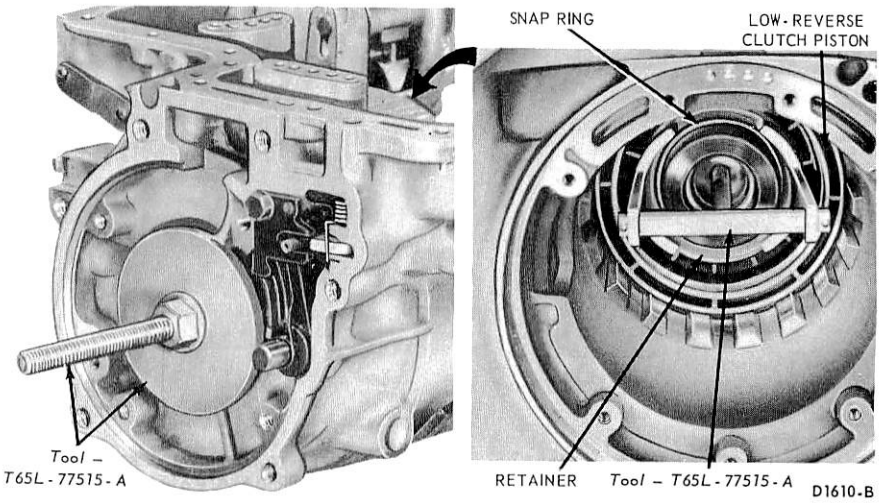

FIG. 17 Compressing Reverse Clutch Springs

23. Place a selective thickness bronze thrust washer on the rear shoulder of the stator support and retain it with vaseline. If the end play was not within specification when checked prior to disassembly, replace the washer with one of proper thickness. Refer to Specifications Section for selective thrust washer thicknesses. Lay a new gasket on the rear mounting face of the pump and position on the case being careful not to damage the large seal on the OD of the pump housing. Install six of the seven mounting bolts and torque them to specification.
24. Adjust the intermediate band as detailed in Adjustments and install the input shaft with the long splined end inserted into the forward clutch assembly.

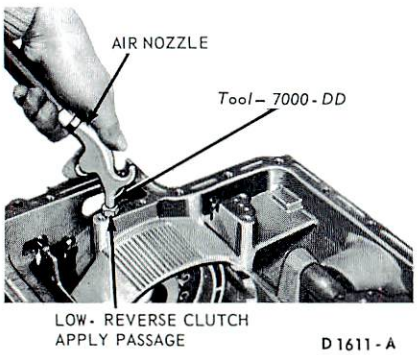

FIG. 18 Removing Low-Reverse Clutch Piston

25. Install Tool 4201-C at the seventh pump mounting bolt (Fig. 12) and check the transmission end play. Remove the tool.
26. Install the control valve in the case, making sure that the levers engage the valves properly. Install the primary throttle valve, rod, and the vacuum diaphragm in the case.
27. Install a new pan gasket and the pan.
28. Install the converter assembly.
29. Install the transmission in the vehicle.

CONTROL VALVE BODY

Disassembly

When the main control is disassembled and the valve body-to-screen gasket is removed, the gasket should not be cleaned in a degreaser, solvent or any type of detergent solution. To clean the gasket, wipe it off with a lint-free cloth.

1. Remove the nine screws that attach the screen to the lower valve body (Fig. 19) and remove the screen and gasket (Fig. 20).
2. Remove the five upper-to-lower valve body and hold-down plate attaching screws. Remove the seven attaching screws from the underside of the lower valve body (Fig. 19).
3. Separate the bodies and remove the separator plate and gasket. Be careful not to lose the check valves and springs. Remove and clean the separator plate screen if necessary (Fig. 20).
4. Remove the manual valve plunger retaining pin from the upper valve body and remove the plunger.
5. Slide the manual valve (Fig. 21) out of the valve body.
6. Cover the downshift valve port with a finger, then working from the underside of the body remove the downshift valve retainer. Remove the spring and downshift valve.
7. Apply pressure on the pressure booster valve retaining plate and remove the two attaching screws. Slowly release the pressure and remove the plate, sleeve and the pressure booster valve. Remove the two springs and the main regulator valve from the same bore.
8. Apply pressure on the throttle booster valve retaining plate and remove the two attaching screws. Slowly release the pressure and remove plate, throttle booster valve and spring, and the manual low 2-1 scheduling valve and spring from the body.
9. Apply pressure on the remaining valve retaining plate and remove the eight attaching screws.
10. Hold the valve body so that the plate is facing upward. Slowly release the pressure and remove the plate.
11. When removing the various valves from the control valve body, keep all ports covered with your fingers except the bore the valve is being removed from. Remove the spring and the intermediate servo

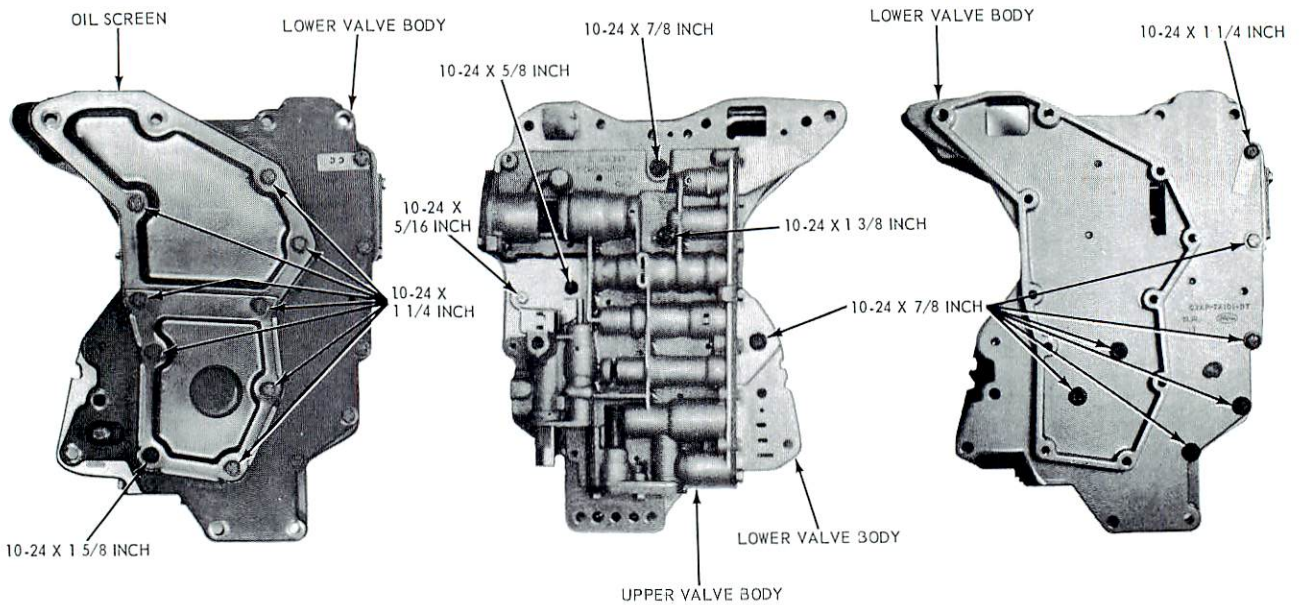

FIG. 19 Control Valve Body and Screen Attaching Screws

modulator valve (Fig. 21) from the valve body.
12. Remove the intermediate servo accumulator valve and springs.
13. Remove the 2-3 back-out valve, spring and 3-2 shift timing valve plug. Do not remove the 3-2 shift timing valve plug if it is found to be peened, preventing its removal. This condition will not affect transmission operation and is not cause for replacement of the main control.
14. Remove the 2-3 shift valve, spring and the throttle modulator valve.
15. Remove the 1-2 shift valve, D2 shift valve and the spring from the valve body.
16. Remove the coasting regulator valve from the body.
17. Remove the cutback control valve to complete the disassembly of the control valve.

Assembly

1. Place the 3-2 shift timing valve plug in the valve body if it was previously removed.
2. Place the downshift valve and spring in the valve body. Compress the spring and install the retainer from the underside of the body (Fig. 22).
3. Place the valve body on a clean surface with the passage side facing up. Place the converter relief valve spring in its bore (Fig. 22). Coat the converter relief valve check valve with vaseline and place it on top of the spring. Place the 2-3 shift check valve ball in its cavity. Place the throttle pressure relief valve spring in its bore (Fig. 22). Coat the throttle pressure relief valve check ball with vaseline and place it on top of the spring.
4. Install the separator screen in the separator plate if it was previously removed. Be sure the screen tabs are flush with the separator plate surface. Carefully position the separator plate and new gasket on the lower valve body. Place the two hold-down plates on the separator plate and install the attaching screws finger tight.
5. Place the lower body and plate assembly on the upper valve body and install the attaching screws finger tight (Fig. 19).
6. Install the oil screen screws loosely, without the screen, to properly align the upper and lower valve bodies, gasket and separator plate.
7. Torque the two bolts that are covered by the screen to specification.
8. Remove the oil screen attaching screws and place the gasket and oil screen in position on the lower valve body. Reinstall the screen attaching screws (Fig. 19).
9. Torque all the valve body and screen attaching screws to specification.
10. Place the cutback control valve (Fig. 21) in the valve body.
11. Place the coasting regulator valve in the body.
12. Place the spring D2 shift valve and the 1-2 shift valve in the body.
13. Place the throttle modulator valve and spring and the 2-3 shift valve in the valve body.
14. Place the spring and the 2-3 backout valve in the valve body.
15. Place the two springs and the intermediate servo accumulator valve in the valve body.
16. Place the intermediate servo modulator valve and spring in the body.
17. Carefully place the valve retaining plate on the body and secure it with the eight attaching screws. Tighten the screws to specification.
18. Place the throttle booster valve and spring in the valve body. Place the manual low 2-1 scheduling valve and spring in the valve body and install the retaining plate. Torque the attaching screws to specification.
19. Place the main regulator, two springs, pressure booster valve and the sleeve in the valve body.
20. Install the pressure booster plate and torque the two attaching screws to specification.
21. Place the manual valve in the valve body and install the plunger and the retaining pin in the body.

INTERMEDIATE SERVO

Disassembly

1. Apply air pressure to the port in the servo cover to remove the piston and rod.
2. Remove the seals from the piston.
3. Remove the seal from the cover.

Assembly

1. Dip the new seals in transmission fluid.

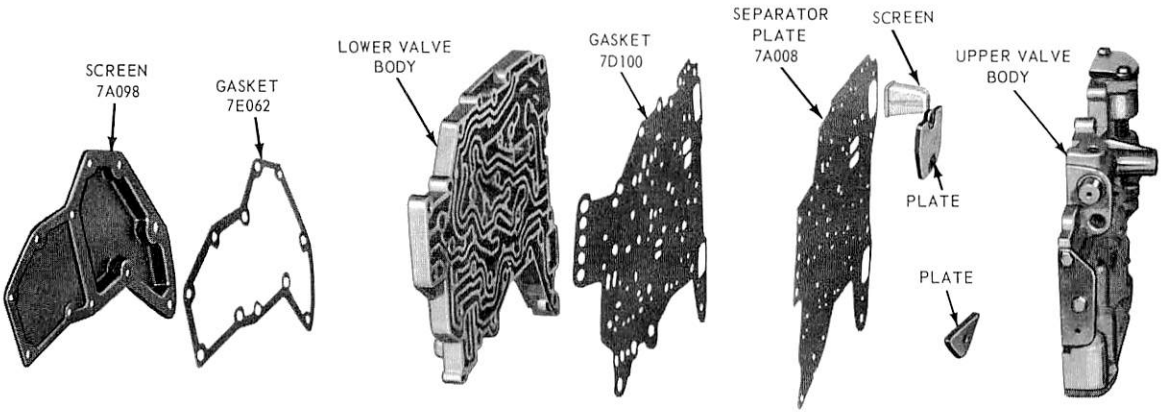

FIG. 20 Upper and Lower Valve Bodies Disassembled

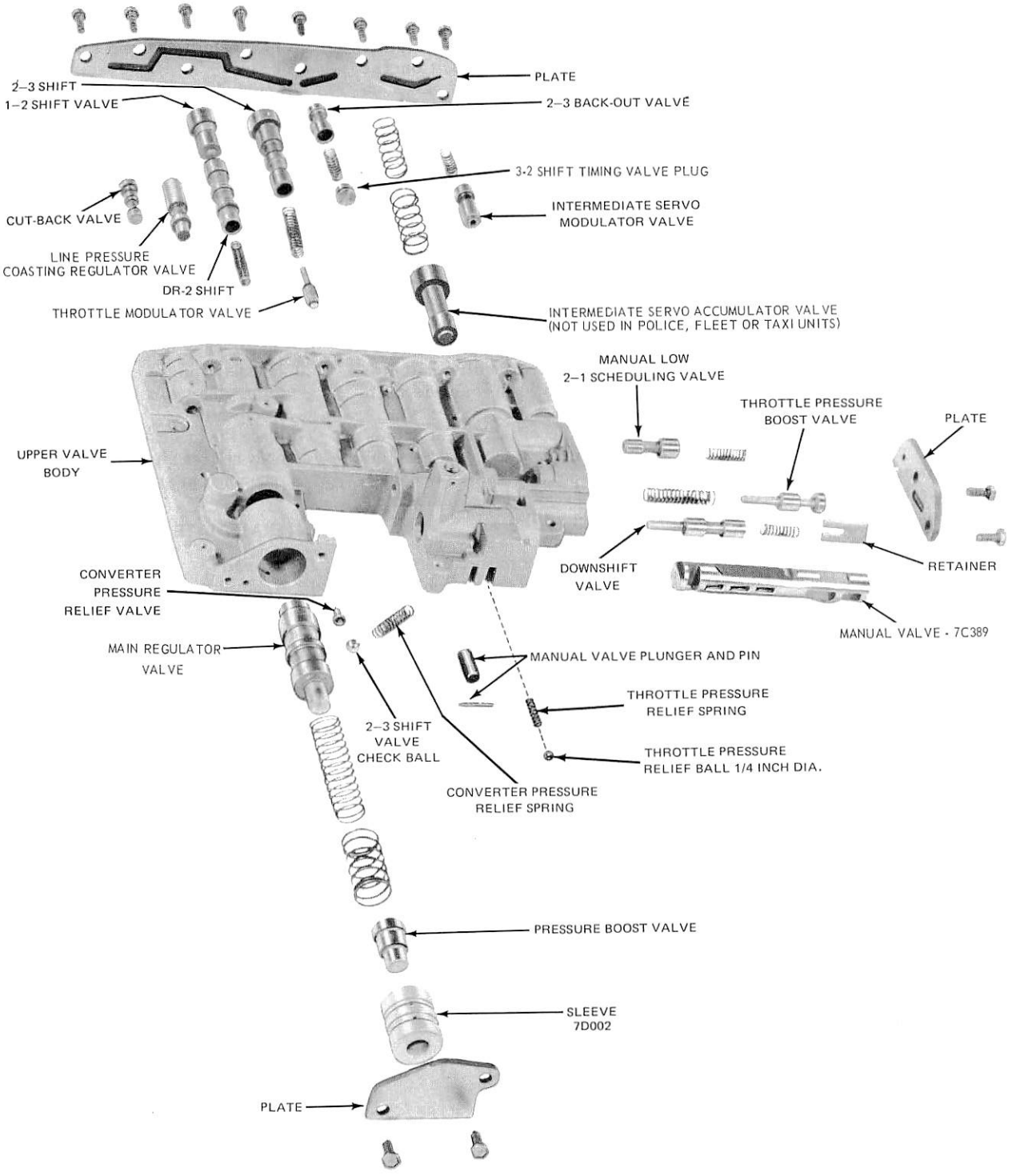

D1764-F

FIG. 21 Upper Valve Body Disassembled

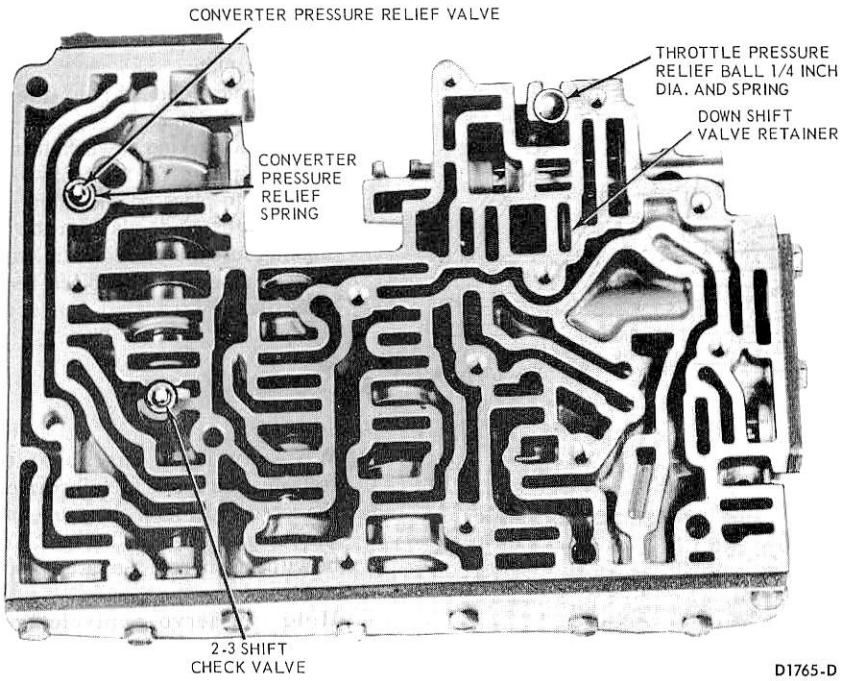

FIG. 22 Converter Pressure Relief Valve, Throttle Pressure Relief Valve, and 2-3 Shift Check Valve Locations

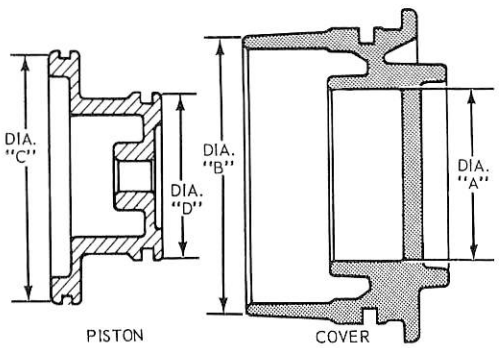

Models	Diameter – Inches				Cover① Identification
PGB-AC8, AT, BB, BC, AP4	A	B	C	D	
	2.075	2.980	3.013②	2.108②	L

① LETTER CAST IN SERVO COVER
② MOULDED LIP SEAL PISTON-DIMENSION SHOWN TO O.D. OF SEAL

D1969-F

FIG. 23 Intermediate Servo Cover and Piston Dimensions

2. Install new seals on the cover and servo piston. Fig. 23 shows the correct servo piston and cover for the transmission.
3. Dip the piston in transmission fluid and install it in the cover.

GOVERNOR

Disassembly

1. Remove the governor attaching bolts and remove the governor.
2. Remove the snap ring that secures the governor distributor on the output shaft (Fig. 24) and slide it off the front of the shaft.
3. Remove the seal rings from the distributor.

Assembly

1. Carefully install new seal rings on the distributor.
2. Working from the front end of the output shaft, slide the governor distributor into place on the shaft. Install the snap ring to secure it. Make sure that the snap ring is seated in the groove.
3. Position the governor on the distributor (Fig. 24) and secure them with the attaching screws.

DOWNSHIFT AND MANUAL LINKAGE

Disassembly

1. Remove the nut and lockwasher that secures the outer downshift lever to the transmission and remove the lever.
2. Slide the downshift lever out from the inside of the case (Fig. 25). Remove the seal from the recess in the manual lever shaft.
3. Remove the C-ring that secures the parking pawl actuating rod to the manual lever. Remove the rod from the case.
4. Remove the nut that secures the inner manual lever to the shaft. Remove the inner lever from the shaft. Slide the outer lever and shaft from the case.

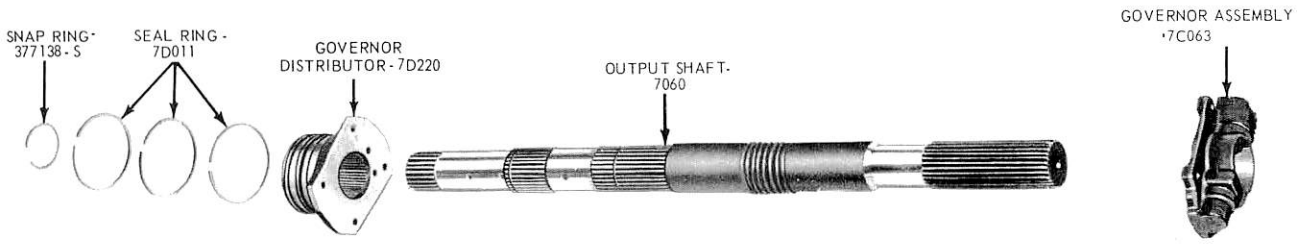

FIG. 24 Output Shaft Disassembled

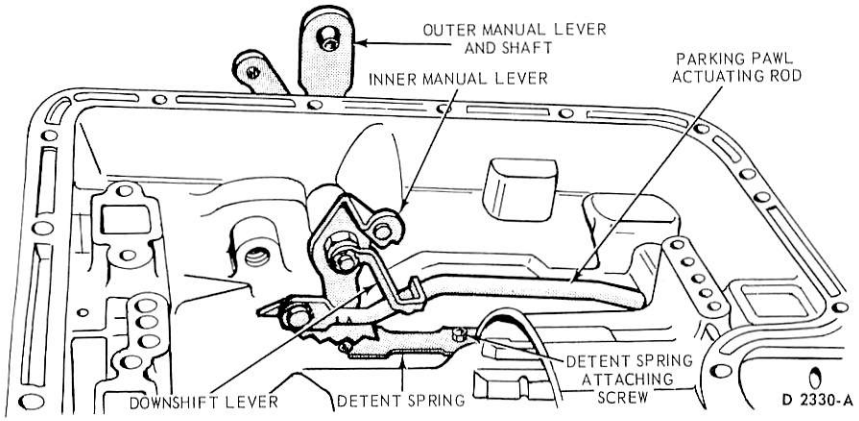

FIG.25 Downshift and Manual Linkage

5. Remove the seal from the case with Tools T59L-100-B and T58L-101-A or 7600-E.
6. Dip the new seal in transmission fluid and install it in the case as shown in Fig. 26.

Assembly

1. Slide the outer manual lever and shaft in the transmission case.
2. Position the inner lever on the shaft making sure the leaf spring roller is positioned in the inner manual lever detent. Install the attaching nut. Tighten the nut to specification. Install the parking pawl actuating rod and secure it to the inner manual lever with a C-washer.
3. Install a new downshift lever seal in the recess of the outer lever shaft. Slide the downshift lever and shaft into position.
4. Place the outer downshift lever on the shaft and secure it with a lockwasher and nut.

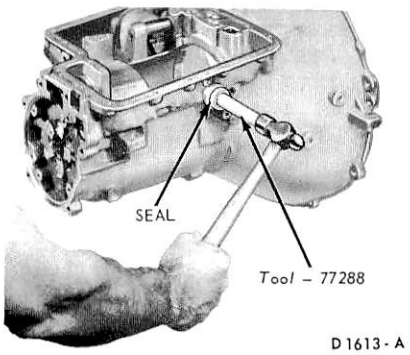

FIG. 26 Installing Manual Lever Seal

PARKING PAWL LINKAGE (F-100, F-250 AND F-350 ONLY)

Disassembly

1. Remove the bolts that secure the parking pawl guide plate to the case (Fig. 27). Remove the plate.
2. Remove the spring, parking pawl and shaft from the case.
3. Working from the pan mounting surface, drill a 1/8 inch diameter hole through the center of the cupped plug. Pull the plug from the case with a wire hook.
4. Unhook the end of the spring from the park plate slot to relieve the tension.
5. Thread a 1/4-20 inch or 8-32 x 1 1/4 inch screw (Fig. 28) into the park plate shaft. Pull the shaft from the case with the screw.

Assembly

1. Position the spring and park plate in the case and install the shaft. Place the end of the spring into the slot of the park plate.
2. Install a new cupped plug (Fig. 27) to retain the shaft.
3. Install the parking pawl shaft in the case. Slip the parking pawl and spring into place on the shaft.
4. Position the guide plate on the case making sure that the actuating rod is seated in the slot of the place. Secure the plate with two bolts and lockwashers.

SERVO APPLY LEVER

Disassembly

1. Working from inside of the transmission case, carefully drive on the servo apply lever shaft to remove the cup plug. The shaft (Fig. 29) can be withdrawn from the case by hand.

Assembly

1. Hold the servo apply lever in position and install the new shaft.
2. Using the fabricated tool shown in Fig. 29, drive the cup plug into position in the case. Be sure the plug is flush with the shoulder of the counterbore. The cup plug may be coated with Loctite, Part No. C3AZ-19554-A, before installation.

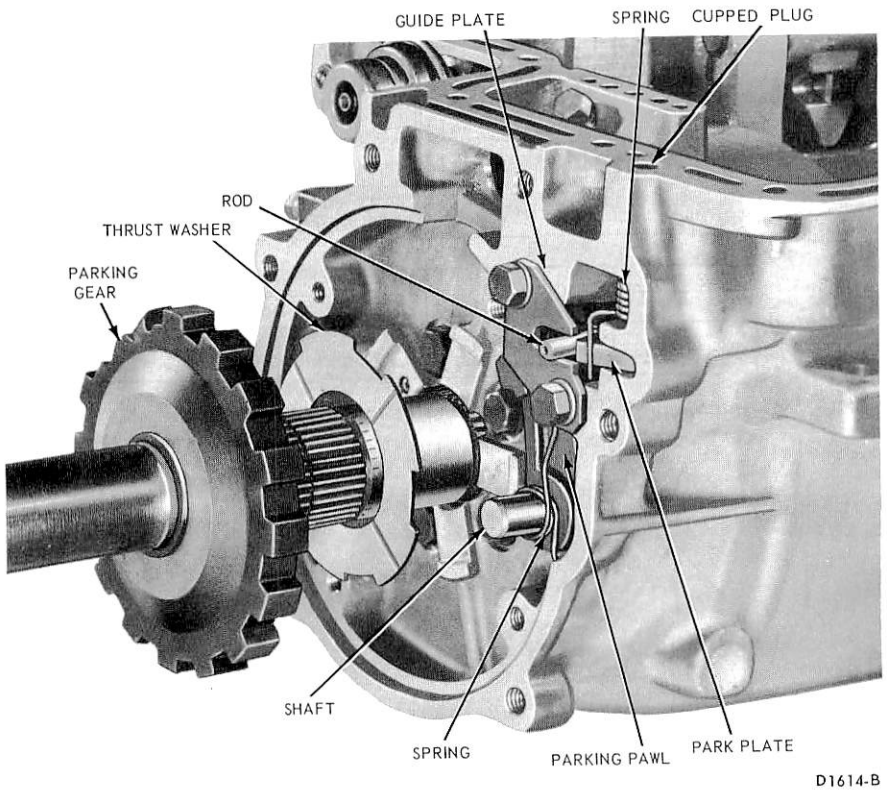

FIG. 27 Parking Pawl Mechanism

FRONT PUMP

The front seal can be replaced after the pump has been installed on the transmission (Figs. 30 and 31).

Disassembly

1. Remove the two seal rings and the selective thrust washer (Fig. 32).
2. Remove the large square-cut seal from the O.D. of the pump housing.
3. Remove the 5 bolts that secure the pump support to the pump housing. Lift the support from the housing.
4. Remove the drive and the driven gear from the housing.
5. If the pump housing bushing is worn or damaged, replace it using the handle and tool shown in Fig. 33.

Assembly

1. Install the drive and driven gears in the pump housing. Each gear has an identification mark on one face. **The identification mark on each gear must be installed toward the front of the pump housing.**
2. Position the pump support in the pump housing and install and torque the five attaching bolts to specification.
3. Carefully install two new seal rings on the pump support. Make sure that the ends of the rings are engaged to lock them in place. Install a new square-cut seal on the O.D. of the pump housing.
4. Install the selective thrust washer. Make sure that the correct thickness selective washer is being used to obtain the specified end play.
5. Place the pump on the converter making sure that the drive gear engages the converter hub. Rotate the pump to make sure that the gears rotate freely.

REVERSE-HIGH CLUTCH

Disassembly

1. Separate the drive train as shown in Fig. 34. Remove the pressure plate retaining snap ring as shown in Fig. 35.
2. Remove the pressure plate and the drive and driven clutch plates (Fig. 36).
3. Install Tool T65L-77515-A (Fig. 37) on the reverse-high clutch drum. Make sure that the legs clear the snap ring enough to permit expanding it enough for removing it. Remove the snap rings and remove the tool.
4. Remove the spring retainer and the piston return springs.
5. Apply air pressure to the piston apply hole in the clutch hub (Fig. 38) and remove the piston.
6. Remove the piston outer seal from the piston and the inner seal from the clutch drum (Fig. 36).
7. Remove the front and rear bushings from the clutch drum if they are worn or damaged. To remove the front bushing, use a cape chisel and cut along the bushing seam until the chisel breaks through the bushing wall. Pry the loose ends of the bushing up with an awl and remove the bushing.

To remove the rear bushing, use the tool shown in Fig. 39, and press the bushing from the drum.

Assembly

1. If the clutch drum bushings were removed, position the drum in a press and press new bushings into the drum with the tools shown in Figs. 39 or 40.
2. Dip the new seals in transmission fluid and install one on the drum and one on the piston.
3. Install the piston in the clutch drum.
4. Position the piston return springs in the piston sockets (Fig. 41). Place the spring retainer on the springs.
5. Install Tool T65L-77515-A (Fig. 37) and compress the springs. Make certain that the spring retainer is centered while compressing the springs. Install the snap ring. Before releasing the pressure on the tool, make certain that the snap ring is positioned inside of the four snap ring guides on the spring retainer.
6. Clutch plate usage varies with each model, refer to the Specifications

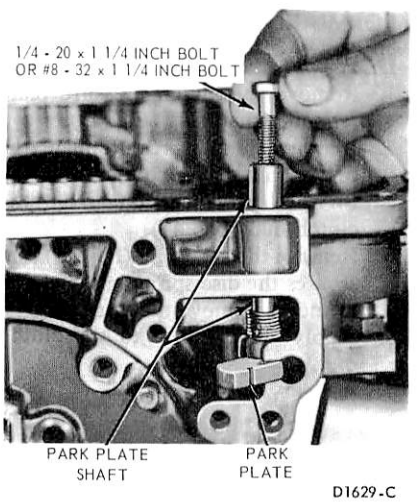

FIG. 28 Removing Park Plate

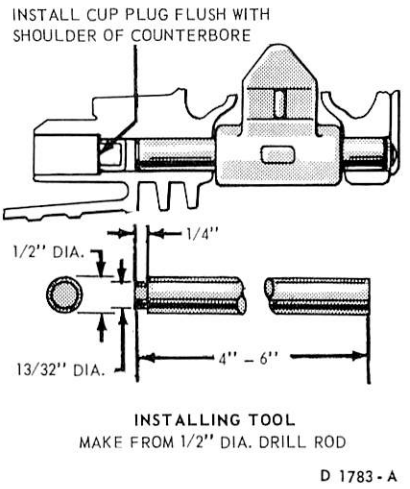

FIG. 29 Servo Apply Lever Installation

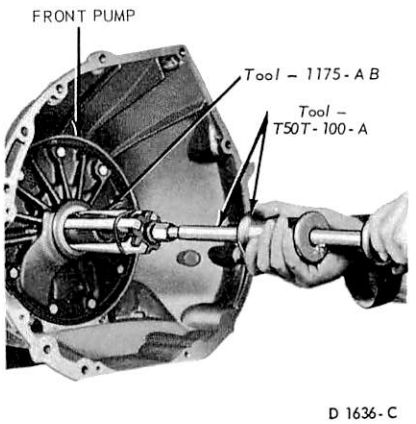

FIG. 30 Removing Front Pump Seal

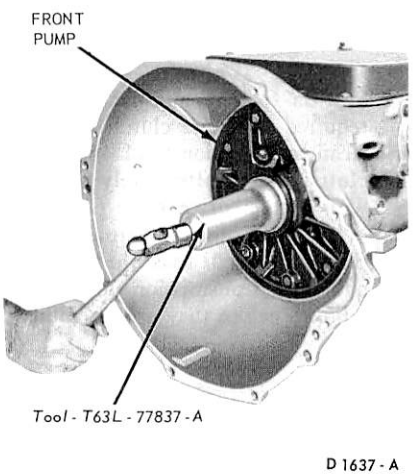

FIG. 31 Installing Fromt Pump Seal

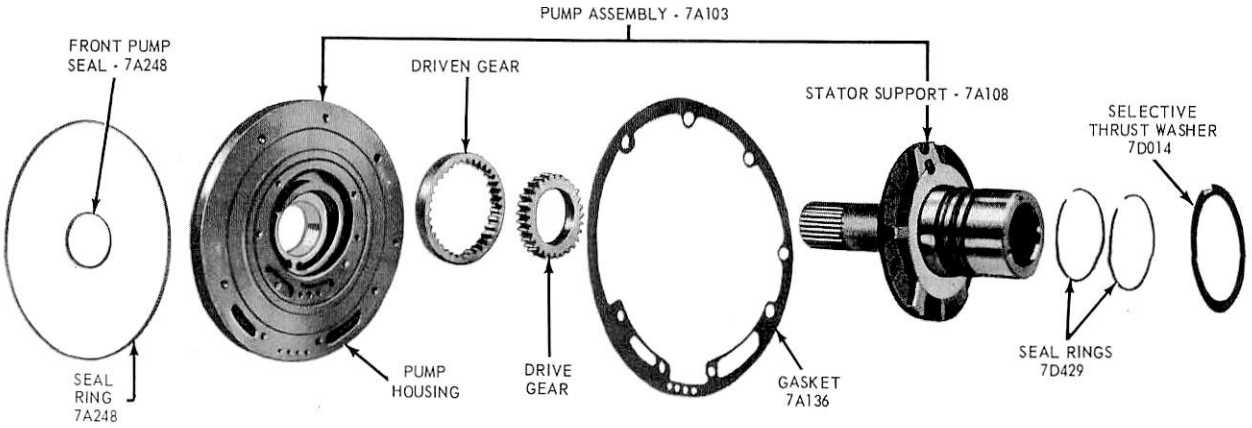

FIG. 32 Front Pump Disassembled

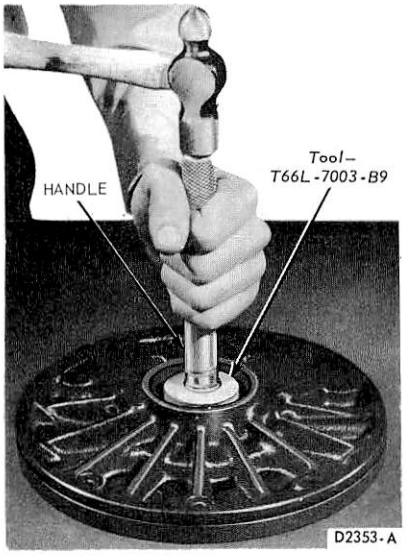

FIG. 33 Replacing Front Pump Housing Bushing

Section for the number of plates required. Dip the clutch plates in clean transmission fluid. Install the clutch plates alternately starting with a steel drive plate (Fig. 36). When new composition clutch plates are used, soak the plates in automatic transmission fluid for 15 minutes before they are assembled.

7. After all clutch plates have been installed, position the pressure plate in the clutch drum. Install the pressure plate snap ring.
8. With a feeler gauge, check the clearance between the pressure plate and snap ring (Fig. 42).
9. The pressure plate should be held downward as the clearance is checked. Refer to the Specification Section for the proper clearance. If the clearance is not within specifications, selective thickness snap rings are available in the following thicknesses: 0.056-0.060, 0.065-0.069, 0.074-0.078, 0.083-0.087 and 0.092-0.096 inch. Install the correct size snap ring and recheck the clearance.

FORWARD CLUTCH

Disassembly

1. Remove the clutch pressure plate retaining snap ring (Fig. 43).
2. Remove the rear pressure plate, the drive and driven plates and the forward pressure plate from the clutch hub (Fig. 44).
3. Remove the snap ring (Fig. 45) that secures the disc spring in the clutch cylinder. Remove the disc spring.
4. Apply air pressure to the clutch apply passage in the cylinder (Fig. 46) to remove the piston.
5. Remove the seal from the piston and the seal from the clutch hub (Fig. 44).

Assembly

1. Dip two new seals in transmission fluid. Install the smaller seal on the clutch hub and the other seal on the clutch piston.
2. Install the clutch piston in the cylinder.
3. Make sure that the steel pressure ring is in the groove on the piston. Position the disc spring in the cylinder with the dished face downward. Install the spring as shown in Fig. 45. Secure the disc with the retaining snap ring.
4. Install the forward pressure plate with the flat side up and the beveled side downward. Dip the clutch plates in clean transmission fluid. Install first a composition driven plate and a steel drive plate (Fig. 44). Install the remaining plates in this sequence. Refer to the Specification Section for the number of plates required. The last plate installed will be the rear pressure plate. Install the snap ring and make certain that it seats fully in the groove. When new composition clutch plates are used,

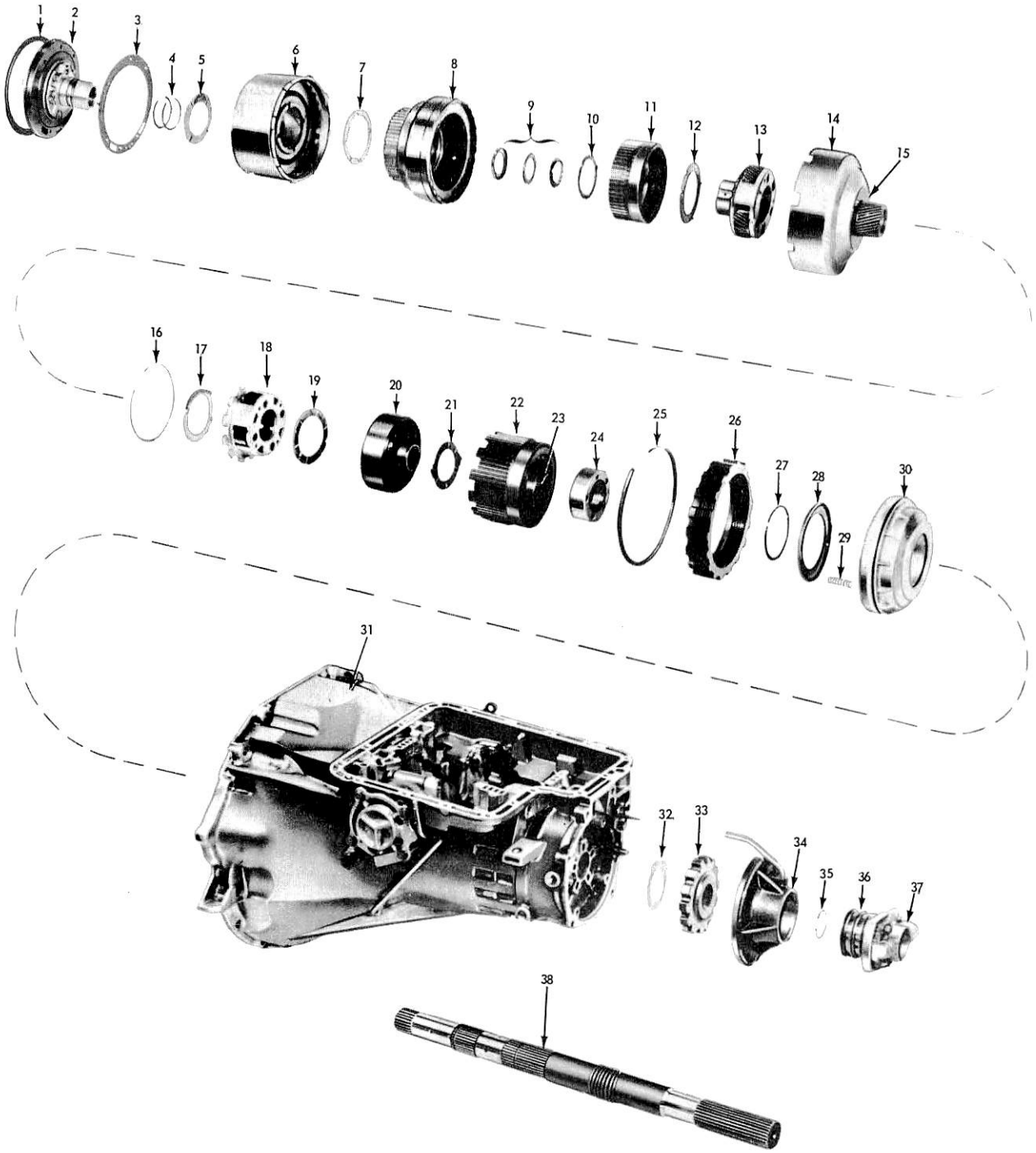

1. FRONT PUMP SEAL RING - 7A248
2. FRONT PUMP - 7A103
3. GASKET - 7A136
4. SEAL
5. NUMBER 1 THRUST WASHER (SELECTIVE)
6. REVERSE–HIGH CLUTCH ASSEMBLY
7. NUMBER 2 THRUST WASHER
8. FORWARD CLUTCH ASSEMBLY
9. NUMBER 3 THRUST WASHER
10. NUMBER 4 THRUST WASHER
11. FORWARD CLUTCH HUB ASSEMBLY - 7D392
12. NUMBER 5 THRUST WASHER
13. FORWARD PLANET ASSEMBLY - 7A398
14. INPUT SHELL - 7D064 AND SUN GEAR ASSEMBLY - 7D063
15. NUMBER 6 THRUST WASHER
16. SNAP RING
17. NUMBER 7 THRUST WASHER
18. REVERSE PLANET ASSEMBLY - 7D006
19. NUMBER 8 THRUST WASHER
20. REVERSE RING GEAR AND HUB
21. NUMBER 9 THRUST WASHER
22. LOW–REVERSE CLUTCH HUB - 7B067
23. ONE-WAY CLUTCH - 7A089
24. ONE-WAY CLUTCH INNER RACE - 7D171
25. SNAP RING
26. LOW–REVERSE CLUTCH
27. SNAP RING
28. LOW–REVERSE PISTON RETURN SPRING RETAINER - 7D406
29. RETURN SPRING
30. LOW–REVERSE PISTON - 7D402
31. CASE - 7005
32. NUMBER 10 THRUST WASHER
33. PARKING GEAR - 7A233
34. GOVERNOR DISTRIBUTOR SLEEVE - 7C232
35. SNAP RING
36. GOVERNOR DISTRIBUTOR - 7D220
37. GOVERNOR - 7C063
38. OUTPUT SHAFT - 7060

D2182-A

FIG. 34 Drive Train Disassembled—Typical

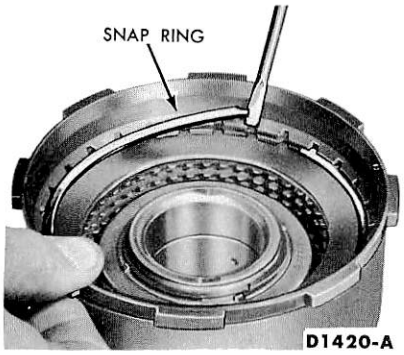

FIG. 35 Removing or Installing Reverse-High Clutch Pressure Plate Snap Ring

soak the plates in automatic transmission fluid for 15 minutes before they are assembled.

5. With a feeler gauge, check the clearance between the snap ring and the pressure plate (Fig. 47). Downward pressure on the plate should be maintained when making this check. Refer to the Specifications Section for the proper clearance.
6. If the clearance is not within specifications, selective snap rings are available in the following thicknesses: 0.056-0.060, 0.065-0.069, 0.074-0.078, 0.083-0.087 and 0.092-0.096 inch. Insert the correct size snap ring and recheck the clearance.

INPUT SHELL AND SUN GEAR

Disassembly

1. Remove the external snap ring from the sun gear as shown in Fig. 48.
2. Remove the thrust washer from the input shell and sun gear (Fig. 49).
3. Working from inside the input shell remove the sun gear. Remove the internal snap ring from the gear.

Assembly

1. Install the forward snap ring on the forward end (short end) of the sun gear (Fig. 46). Working from inside

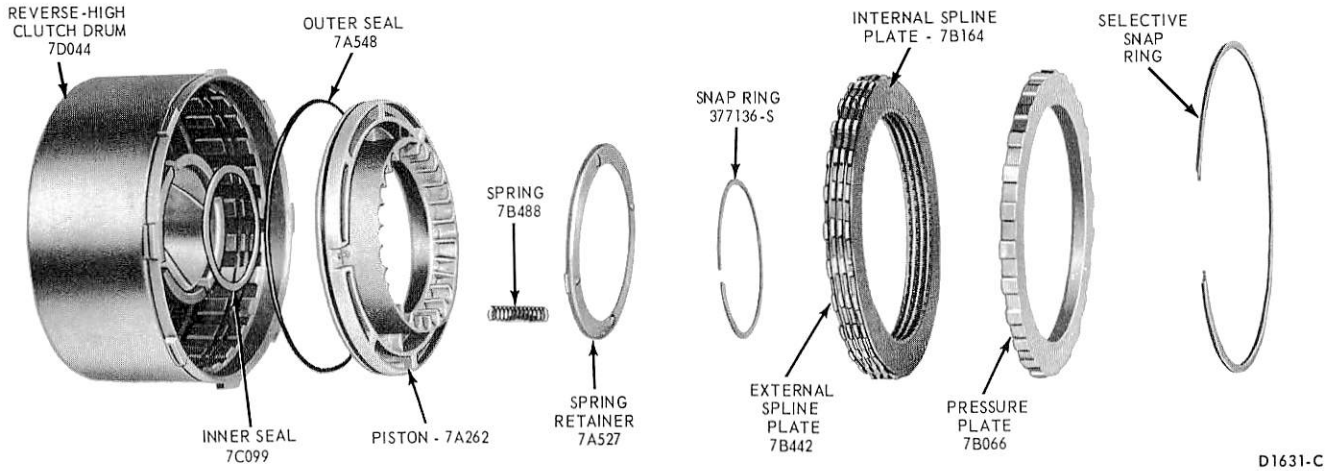

FIG. 36 Reverse-High Clutch Disassembled

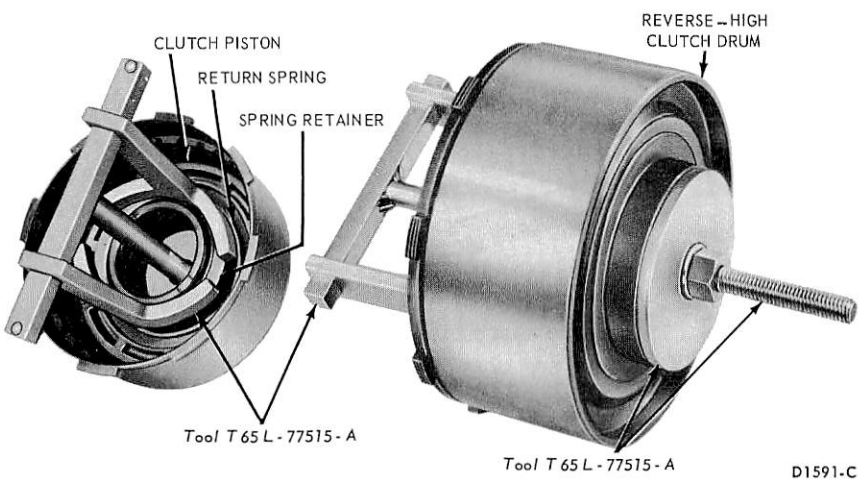

FIG. 37 Removing or Installing Reverse-High Clutch Piston Snap Ring

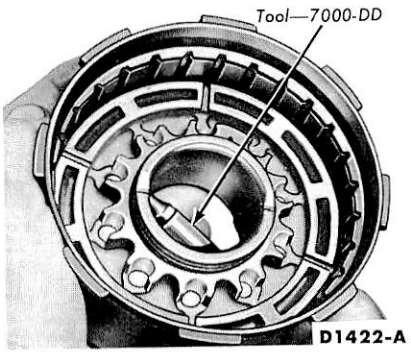

FIG. 38 Removing Reverse-High Clutch Piston

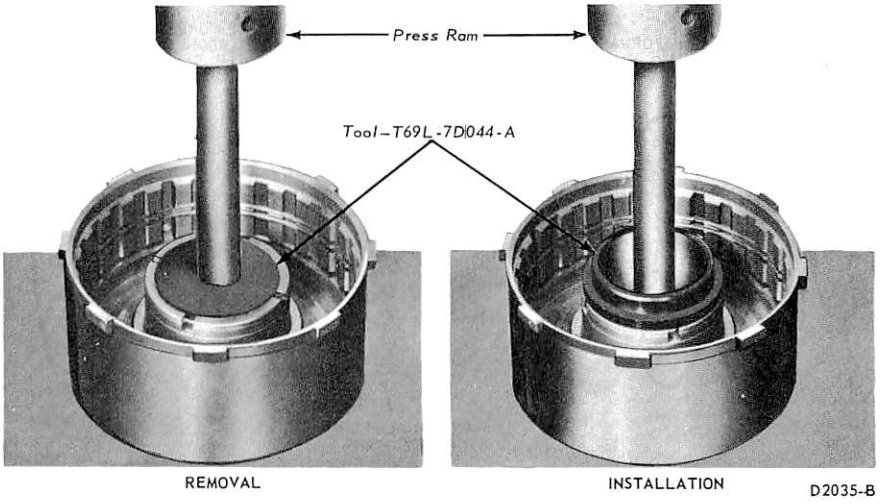

FIG. 39 Replacing Reverse-High Clutch Rear Bushing

the input shell, slide the sun gear and snap ring into place making sure that the longer end is at the rear (Fig. 49).
2. Place the No. 6 thrust washer on the sun gear and install the rear snap ring.

OUTPUT SHAFT HUB AND RING GEAR

Disassembly
1. Remove the hub retaining snap ring (Fig. 50) from the ring gear.
2. Lift the hub from the ring gear.

Assembly
1. Position the hub in the ring gear.
2. Secure the hub with the retaining snap ring. Make certain that the snap ring is fully engaged with the groove.

ONE-WAY CLUTCH

Disassembly
1. Remove the snap ring and bushing from the rear of the low-reverse clutch hub (Fig. 51).
2. Remove the rollers from the spring assembly and lift the spring assembly from the hub.
3. Remove the remaining snap ring from the hub.

Assembly
1. Install a snap ring in the forward snap ring groove of the low-reverse clutch hub.
2. Place the low-reverse clutch hub on the bench with the forward end down (Fig. 52).
3. Install the one-way clutch spring assembly on top of the snap ring.

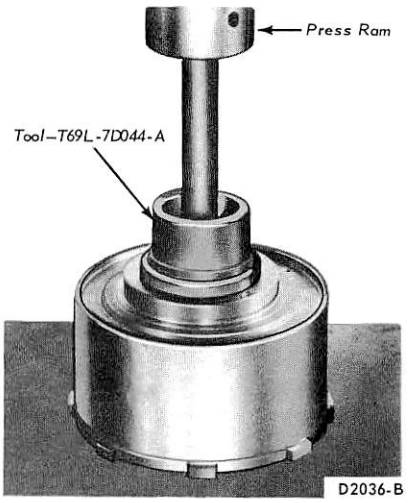

FIG. 40 Installing Reverse-High Clutch Front Bushing

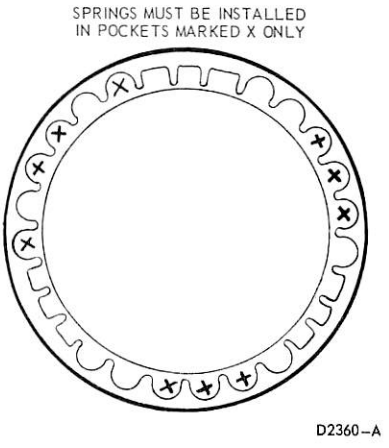

FIG. 41 Reverse-High Clutch Piston Return Spring Locations

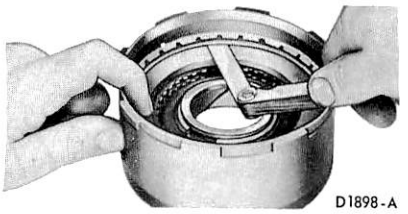

FIG. 42 Checking Reverse-High Clutch snap Ring Clearance

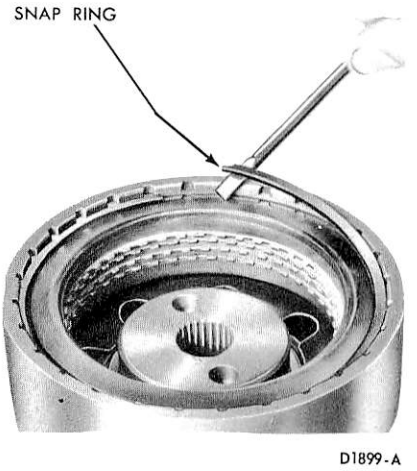

FIG. 43 Removing Forward Clutch Pressure Plate Snap Ring

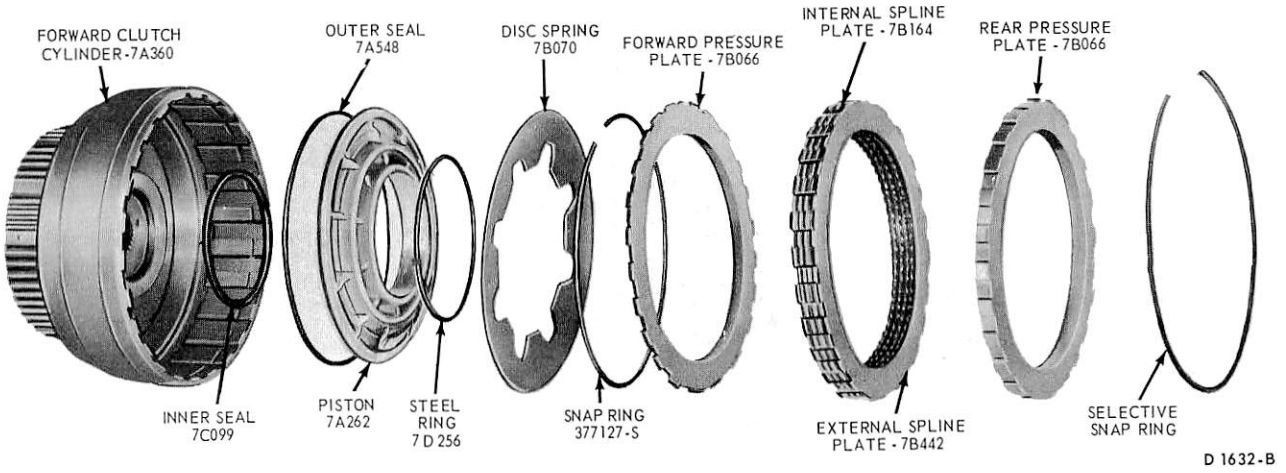

FIG. 44 Forward Clutch Disassembled

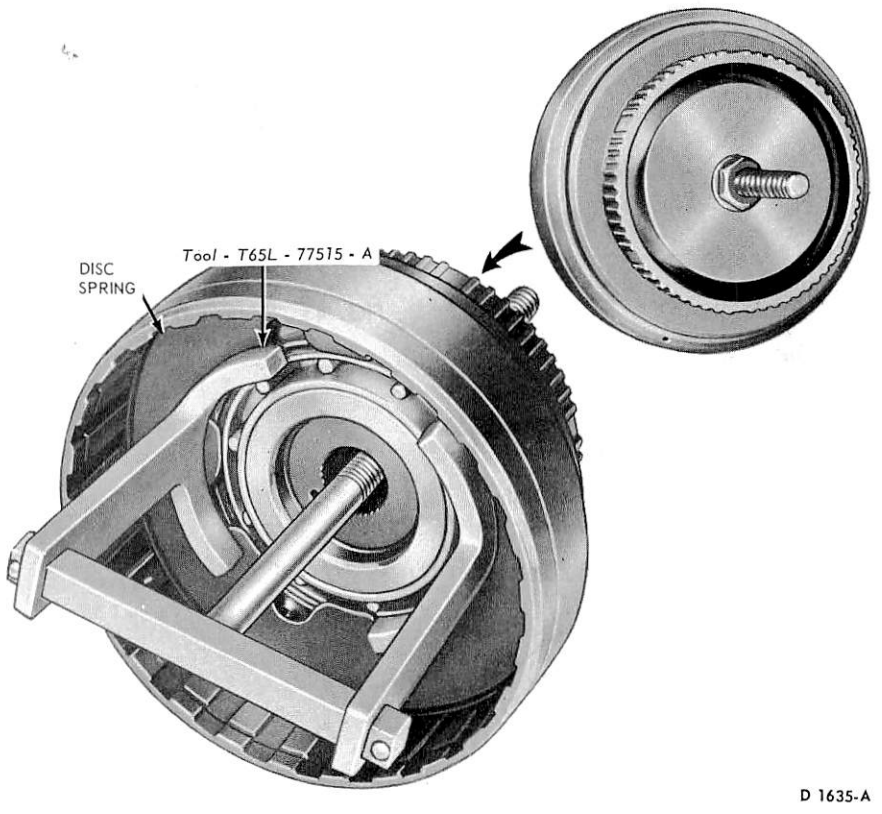

FIG. 45 Removing or Installing Disc Spring

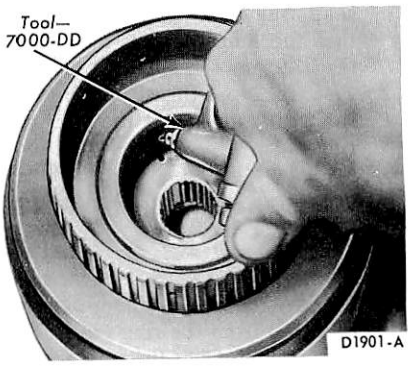

FIG. 46 Removing Forward Clutch Piston

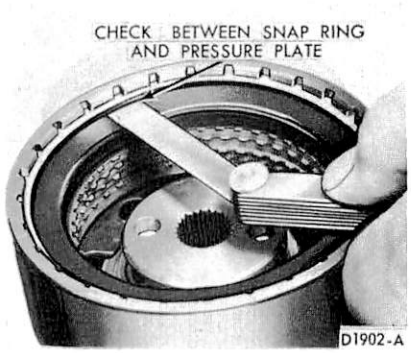

FIG. 47 Checking Forward Clutch Clearance

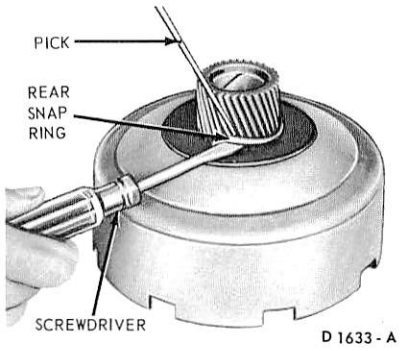

FIG. 48 Removing Sun Gear Snap Ring

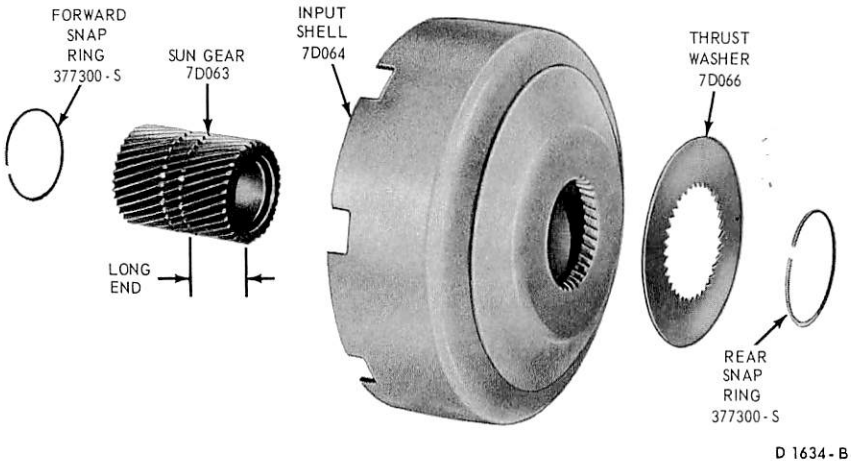

FIG. 49 Input Shell and Sun Gear Disassembled

4. Install a roller into each of the spring assembly compartments (Fig. 51).
5. Install the bushing on top of the spring assembly.
6. Install the remaining snap ring at the rear of the low-reverse clutch hub to secure the assembly (Fig. 51).

LOW-REVERSE CLUTCH PISTON

Disassembly

1. Remove the inner and the outer seal from the reverse clutch piston.

Assembly

1. Dip the two new seals in clean transmission fluid.
2. Install the seals on the piston.

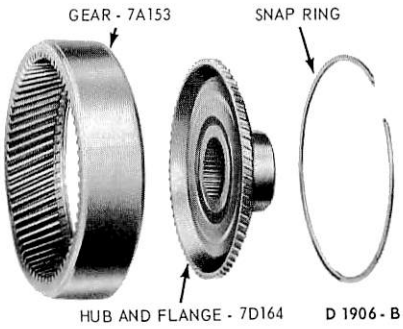

FIG. 50 Output Shaft Hub and Ring Gear

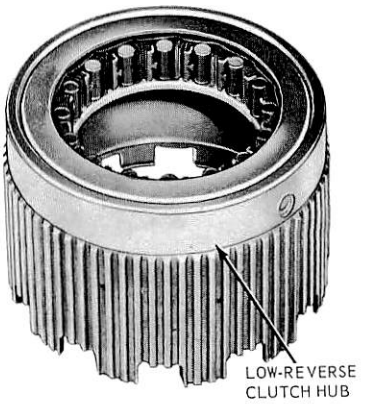

FIG. 52 One-Way Clutch Installed

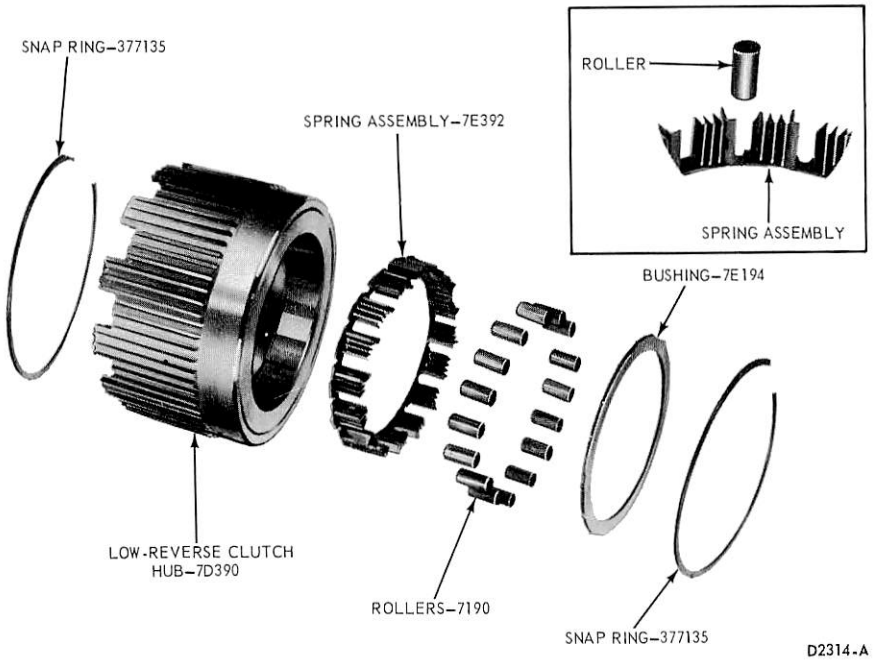

FIG. 51 One-Way Clutch Disassembled

SPECIFICATIONS

APPROXIMATE REFILL CAPACITIES

C6 TRANSMISSION

Trans. Model	U.S. Measure	Imp. Measure
All	12-1/2 qts.	10 qts.

CLUTCH PLATES

C6 TRANSMISSION

Transmission Model	Steel Plates	Friction Plates
Forward Clutch Plates		
Model: PGB-AC8, AT, BB, BC	3	4
Model: PGB-AP4	4	5
Reverse–High Clutch Plates	3	3
Low–Reverse Clutch Plates	5 (5)①	5

① Use the quantities shown in parenthesis when a service replacement case is installed.

SELECTIVE THRUST WASHERS

C6 TRANSMISSION

Identification No.	Thrust Washer Thickness–Inch	Identification No.	Thrust Washer Thickness–Inch
1	0.056–0.058	4	0.103–0.105
2	0.073–0.075	5	0.118–0.120
3	0.088–0.090		

CHECKS AND ADJUSTMENTS

C6 TRANSMISSION

Operation	Specification
Transmission End Play	0.008 – 0.044 inch (Selective Thrust Washers Available)
Turbine and Stator End Play	New or Rebuilt 0.021 Max. Used 0.030 Max. ①
Intermediate Band Adjustment	Remove and discard lock nut. Adjust screw to 10 ft-lbs torque, then back off 1-1/2 turns, install new lock nut and tighten lock nut to specification.
Forward Clutch Pressure Plate-to-Snap Ring Clearance	0.031–0.044
Selective Snap Ring Thicknesses	0.056–0.060 0.065–0.069 0.074–0.078 0.083–0.087 0.092–0.096
Reverse-High Clutch Pressure Plate-to-Snap Ring Clearance	0.022–0.036
Selective Snap Ring Thickness	0.056–0.060 0.065–0.069 0.074–0.078 0.083–0.087 0.092–0.096

① To check end play, exert force on checking tool to compress turbine to cover thrust washer wear plate. Set indicator at zero.

SPECIAL TOOLS

C6 TRANSMISSION

Tool No.	Description	Tool No.	Description
T50T-100-A or T59L-100-B	Impact Hammer	T61L-7657-B	Transmission Extension Housing Oil Seal Replacer
T58L-101-A	Puller Attachment	T59P-77067	Dial Indicator Support Fixture
TOOL-1175-AB	Oil Seal Remover (Head)	TOOL-77288	Control Shaft Seal Replacer
TOOL-4201-C	Diff. Backlash & Runout Gauge	T71P-77370-D	Band Adjustment Socket
T64L-6001-A	Portable Twist Post Stand	T71P-77370-H	Band Adjustment Torque Wrench
TOOL-7000-DD	Air Nozzle Rubber Tip	TOOL-77530-A	Clutch Assembly Fixture
T69P-7D044-A	Trans. Bushing Kit Remover and Replacer	T65L-77515-A	Automatic Transmission Clutch Spring Compressor
		T63L-77837-A	Front Pump Seal Replacer
		TOOL-S8695-A	Vacuum Unit Wrench (Snap-On)

TORQUE LIMITS C6 TRANSMISSION

Item	Ft-Lbs	Item	Ft-Lbs
Converter to Flywheel	20-35	Extension Assy to Trans. Case	25-30
Front Pump to Trans. Case	12-20	Pressure Gauge Tap	9-15
Overrunning Clutch Race to Case	18-25	Band Adj. Screw Locknut to Case	35-45
Oil Pan to Case	12-16	Cooler Tube Connector Lock	20-35
Stator Support to Pump	12-16	Converter to Drain Plug	14-28
Converter Cover to Converter Hsg.	12-16	Manual Valve Inner Lever to Shaft	30-40
Guide Plate to Case	12-16	Downshift Lever to Shaft	12-16
Intermediate Servo Cover to Case	10-14	Filler Tube to Engine	20-25
Diaphragm Assy to Case	15-23	Transmission to Engine	40-50
Distributor Sleeve to Case	12-16	T.R.S. Switch to Case	4-8

Item	In-Lbs	Item	In-Lbs
End Plates to Body	20-30	Control Assy to Case	95-125
Inner Downshift Lever Stop	20-30	Gov. Body to Collector Body	80-120
Reinforcement Plate to Body	20-30	Oil Tube Connector	60-120
Screen and Cover to Upper Valve Body	50-60	Detent Spring to Case	80-120

CD2184-D

PART 17-15 FMX Automatic Transmission

Applies to P-350, P-400, P-500 and F-350 Only

COMPONENT INDEX	Page
CONTROL VALVE BODY	
Cleaning and Inspection	01-10
Disassembly and Assembly	15-12
Removal and Installation	15-05
DESCRIPTION	15-02
DOWNSHIFT LINKAGE	
Disassembly and Assembly	15-16
EXTENSION HOUSING BEARING	
Removal and Installation	15-07
EXTENSION HOUSING REAR SEAL	
Removal and Installation	15-07
FRONT BAND	
Adjustment	15-04
FRONT CLUTCH	
Cleaning and Inspection	01-11
Disassembly and Assembly	15-18
FRONT PUMP	
Cleaning and Inspection	01-11
Disassembly and Assembly	15-17
FRONT SERVO	
Cleaning and Inspection	01-10
Disassembly and Assembly	15-14
Removal and Installation	15-06
GOVERNOR	
Cleaning and Inspection	01-10
Disassembly and Assembly	15-15
Removal and Installation	15-07

COMPONENT INDEX	Page
MANUAL LINKAGE	
Disassembly and Assembly	15-16
PRESSURE REGULATOR	
Cleaning and Inspection	01-10
Disassembly and Assembly	15-15
Removal and Installation	15-08
PRIMARY SUN GEAR SHAFT	
Cleaning and Inspection	01-12
Disassembly and Assembly	15-20
REAR BAND	
Adjustment	15-04
REAR CLUTCH	
Cleaning and Inspection	01-11
Disassembly and Assembly	15-17
REAR PUMP	
Disassembly and Assembly	15-17
REAR SERVO	
Cleaning and Inspection	01-10
Disassembly and Assembly	15-15
Removal and Installation	15-07
SPECIFICATIONS	15-21
TRANSMISSION (COMPLETE)	
Cleaning and Inspection	01-10
Disassembly and Assembly	15-08
Removal and Installation	15-05

DESCRIPTION

Figure 1 shows the location of the converter, front pump, clutches, bands, gear train and most of the internal parts used in the FMX transmission.

The identification tag (Fig. 2) on the FMX transmission is attached under the lower right hand extension-to-case bolt. The tag includes the model prefix, suffix build date code and serial number. The first line on the tag shows the transmission model prefix and suffix. A number appearing after the suffix (Fig. 2) indicates that the internal parts in the transmission have been changed after initial production start-up. For example, PHC-B model transmission that has been changed internally would read PHC-B1. Both transmissions are basically the same, but some service parts in the PHC-B1 transmission are slightly different that the PHC-B transmission. Therefore, it is important that the codes on the transmission identification tag be checked when ordering parts or making inquiries about the transmission.

The tag must be kept with the individual transmission it was originally installed on. If the tag was removed during disassembly, reinstall it on the same unit.

The FMX transmission is a three speed unit capable of providing automatic upshifts and downshifts through the three forward gear ratios, and also capable of providing manual selection of first and second gears.

The transmission consists essentially of a torque converter, planetary gear train, two multiple disc clutches and a hydraulic control system (Fig. 3).

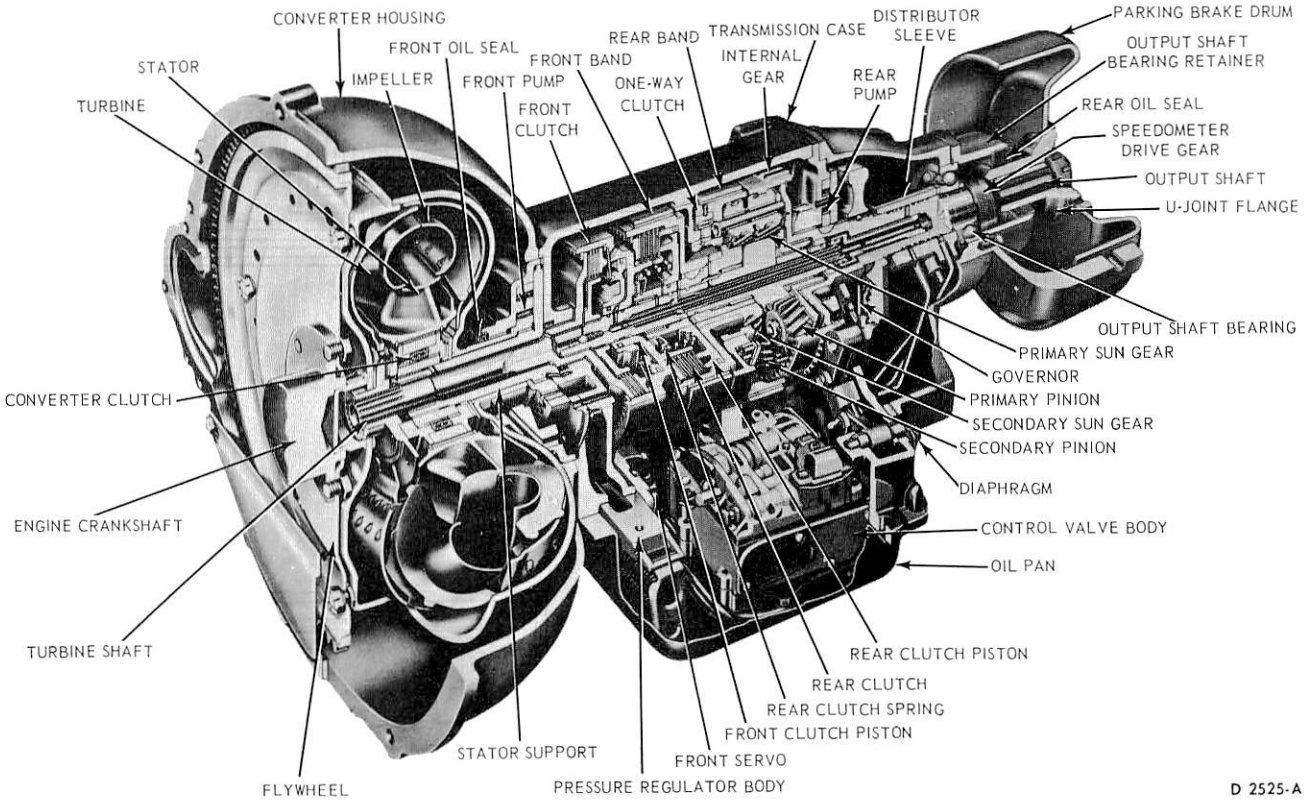

FIG. 1 FMX Transmission—Typical

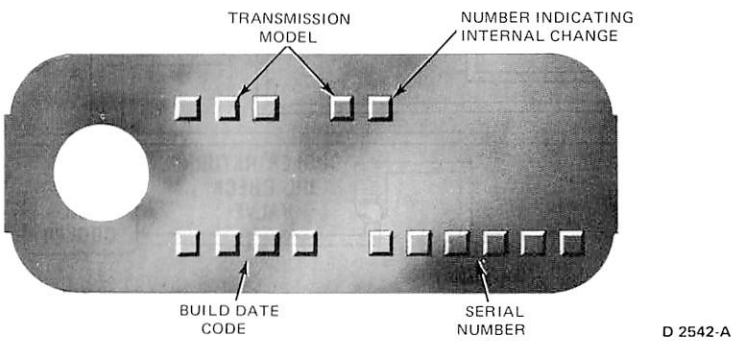

FIG. 2 Identification Tag

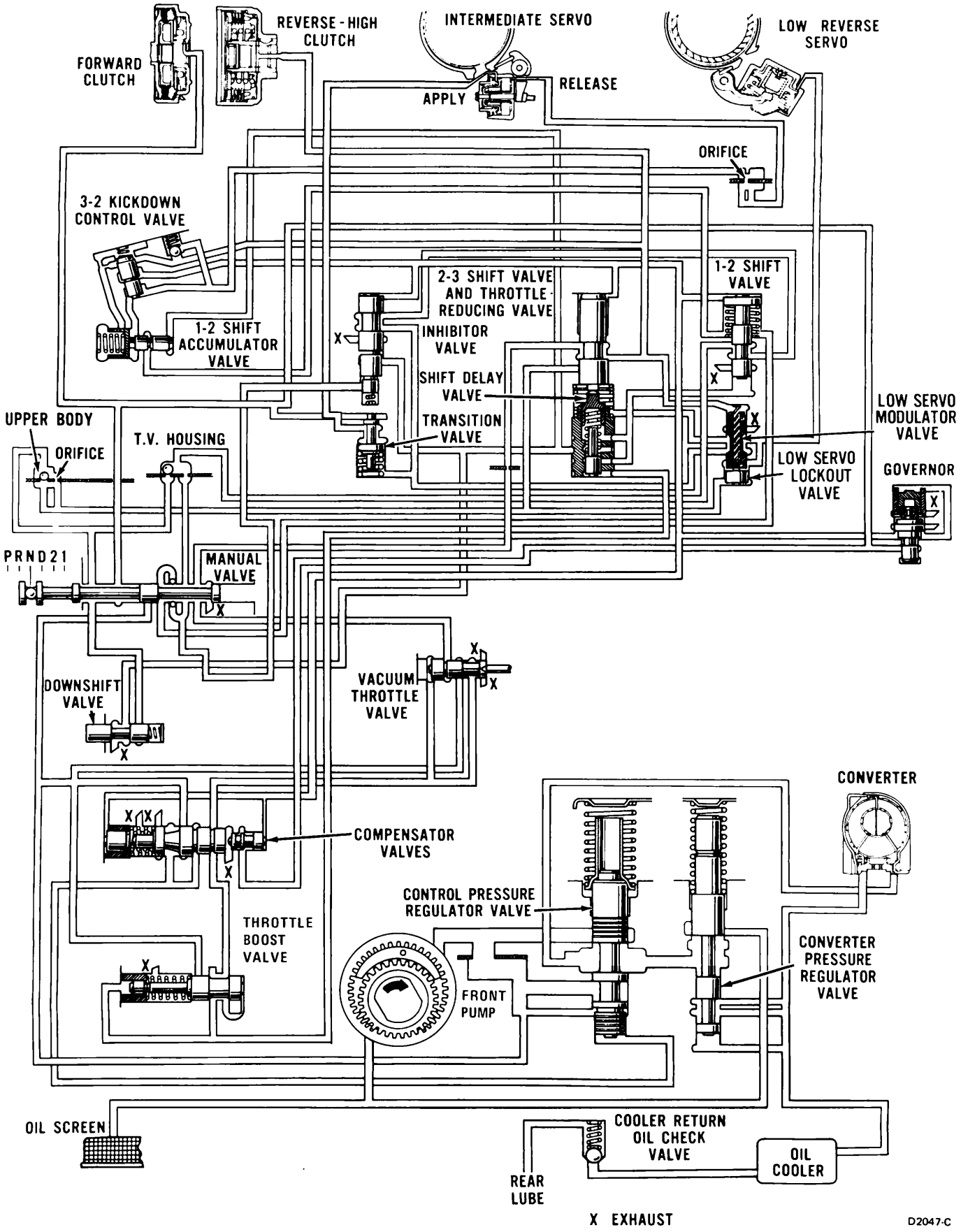

FIG. 3 Hydraulic Control System—FMX Transmission

ADJUSTMENTS

To prevent damage to the transmission and to assure proper band adjustment, it is essential that the tools and procedures described below are used whenever the bands are adjusted.

FRONT BAND ADJUSTMENT

1. Drain the fluid from the transmission by loosening the pan attaching bolts starting at the rear of the pan and working toward the front. When most of the fluid has drained from the pan, remove the remainder of the attaching bolts. Use a clean drain can equipped with a 100-mesh screen if the fluid is to be reused.
2. Remove the pan, then remove the fluid filter and clip from the transmission. Clean the inside of the pan. Remove all gasket material from the pan and pan mounting face of the case.
3. Loosen the front servo adjusting screw lock nut.
4. Pull back on the actuating rod, and insert the 1/4 inch spacer between the adjusting screw and servo piston stem (Fig. 4). Tighten the adjusting screw to 10 in-lbs torque. Remove the spacer and tighten the adjusting screw and additional 3/4 turn. Hold the adjusting screw stationary and tighten the lock nut securely.
5. Install the transmission fluid screen and clip. Install the pan using a new gasket.
6. Refill the transmission to the proper level with the specified fluid.

ALTERNATE FRONT BAND ADJUSTMENT

1. Drain the fluid from the transmission. If the same fluid is to be used again in the transmission after the band adjustment, filter the fluid through a 100-mesh screen as it drains from the transmission. Reuse the fluid only if it is in good condition.
2. Remove and thoroughly clean the pan and screen. Discard the pan gasket.
3. Loosen the front servo adjusting screw lock nut two full turns with a 9/16 inch wrench. Check the adjusting screw for free rotation in the actuating lever after the lock nut is loosened, and free the screw if necessary.
4. Pull the adjusting screw end of the actuating lever away from the servo body, and insert the 1/4 inch spacer (Fig. 5) between the servo piston stem and the adjusting screw.
5. Install the socket handle on the 9/16 inch socket.
6. Insert the T-handle extension through the socket handle and socket, and install the screwdriver socket on the T-handle extension.
7. Place the tool on the adjusting screw so that the screwdriver socket engages the screw and the 9/16 inch socket engages the lock nut.
8. With a torque wrench on the T-handle extension, tighten the adjusting screw to 10 in-lbs torque.
9. Remove the spacer and tighten the adjusting screw an additional 3/4 turn. Hold the adjusting screw stationary, and torque the lock nut to specification.
10. Place a new gasket on the pan, and install the screen and pan on the transmission.
11. Fill the transmission with fluid.

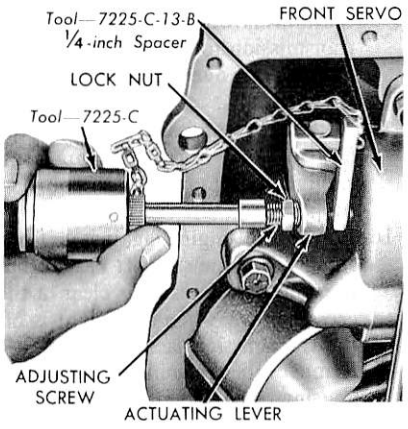

FIG. 4 Adjusting Front Band—Typical

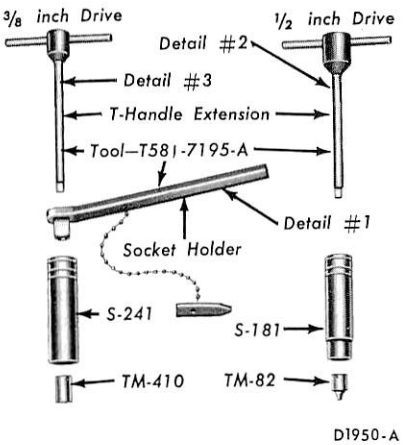

FIG. 5 Front Band Adjusting Tools

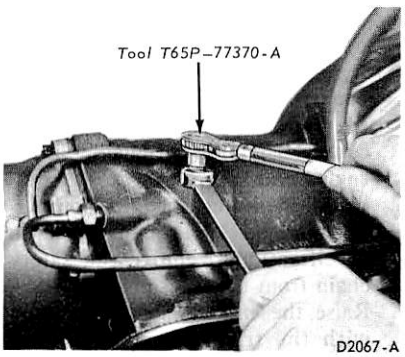

FIG. 6 Adjusting Rear Band

REAR BAND ADJUSTMENT

1. Remove all dirt from the adjusting screw threads, then oil the threads.
2. Loosen the rear band adjusting screw lock nut. Using the torque wrench shown in Fig. 6, tighten the adjusting screw until the tool handle clicks. The tool is a preset torque wrench which clicks and breaks when the torque on the adjusting screw reaches 10 ft-lbs.
3. If the screw is found to be tighter than wrench capacity (10 ft-lbs torque), loosen the screw and tighten until the wrench clicks and breaks.
4. Back off the adjusting screw 1-1/2 turns. Hold the adjusting screw stationary and tighten the adjusting screw lock nut to specification. **Severe damage may result if the adjusting screw is not backed off exactly 1-1/2 turns.**

REMOVAL AND INSTALLATION

TRANSMISSION AND CONVERTER

Removal

1. Drive the vehicle onto a hoist,**but do not raise it at this time.**
2. After removing the converter access hole covers, remove the two upper bolts and lock washers which attach the converter housing to the engine.
3. Raise the vehicle.
4. Place a drain pan under the transmission fluid pan. Starting at the rear of the pan and working toward the front, loosen the attaching bolts and allow the fluid to drain, finally remove all of the pan attaching bolts except two at the front, to allow the fluid to further drain. After the fluid has drained, install two bolts on the rear side of the pan to temporarily hold it in place.
5. Remove the converter drain plug access cover from the lower end of the converter housing.
6. Remove the converter-to-flywheel attaching nuts. Place a wrench on the crankshaft pulley attaching bolt to turn the converter to gain access to the nuts.
7. With the wrench on the crankshaft pulley attaching bolt, turn the converter to gain access to the converter drain plug. Then, remove the plug. Place a drain pan under the converter to catch the fluid. After the fluid has drained from the converter, reinstall the plug.
8. Wedge the converter to hold it in place when the transmission is removed.
9. Disconnect the starter cable from the starter, and disconnect the transmission to body ground cable from the transmission. Remove the starter.
10. On a transmission that has a oil cooler in the radiator, disconnect the fluid lines.

On models equipped with a side-mounted cooler, disconnect the radiator-to-cooler coolant lines at the cooler. Plug the lines to prevent coolant loss from the radiator.

11. Disconnect the manual and throttle linkages from the transmission.
12. Remove the vacuum hoses from the vacuum unit, remove the vacuum line retaining clips.
13. Disconnect the speedometer cable from the extension housing, and remove the drive shaft and/or coupling shaft.
14. Support the transmission on a transmission jack. Secure the transmission to the jack with safety chain. Remove both engine rear support bolts.
15. With the transmission jack, raise the engine and transmission high enough to remove the engine rear supports.
16. Lower the engine against a floor stand or engine support bar so that the converter housing is clear of the crossmember when all weight is off the transmission jack.
17. Remove the remaining converter housing-to-engine attaching bolts.
18. Move the assembly toward the rear and lower it, leaving the flywheel attached to the crankshaft. If additional clearance is needed, tilt the rear of the assembly upright slightly and to the rear (enough to allow removal of the six flywheel to crankshaft bolts). Move the assembly to the rear, and remove it.

Installation

1. Torque the converter drain plug to specification.
2. If the converter has been removed from the converter housing, carefully position the converter to the transmission making sure the converter drive flats are fully engaged in the pump gear. Install a wedge to prevent the converter from slipping out of the housing.
3. With the converter properly installed, place the transmission on the jack. Secure the transmission to the jack with safety chain.
4. Rotate the converter so that the studs and drain plug are in alignment with their holes in the flywheel.
5. Raise transmission and converter with the jack to align it with the engine. Remove the wedge from the converter housing. Carefully move the converter and transmission assembly forward into position, using care not to damage the flywheel and converter pilot.**The converter must rest squarely against the flywheel. This indicates that the converter pilot is not binding in the engine crankshaft.**
6. Install the lower converter housing-to-engine bolts. Torque the bolts to specification. Remove the safety chain from the transmission.
7. Raise the engine and transmission with the transmission jack, and remove the engine support stand or support bar.
8. Place the engine rear supports in a position on the crossmember.
9. Lower the engine and transmission against the supports, and at the same time install the support bolts.
10. Install and torque the four converter-to-flywheel attaching nuts to specification. Install the converter housing access cover and secure it with the attaching bolts.
11. Connect the oil cooler inlet and outlet lines to the transmission or side-mounted cooler.
12. Install the vacuum lines and retaining clips. Install the vacuum hoses on the vacuum unit.
13. Coat the universal joint knuckle with transmission fluid, and install the drive shaft and/or coupling shaft.
14. Connect the speedometer cable to the transmission.
15. Connect the manual linkage rod to the transmission manual lever.
16. Connect the throttle linkage to the transmission throttle lever.
17. Install the linkage splash shield.
18. Install the starter motor. Connect the transmission to frame ground cable.
19. Connect the fluid filler tube.
20. Lower the hoist. Then install the upper two converter housing-to-engine bolts and torque to specification.
21. Install the access hole covers, and position the floor mat.
22. Fill the transmission with fluid to the specified level.
23. Check the transmission, converter assembly, and oil cooler lines for fluid leaks. Then adjust the transmission control linkage.

CONTROL VALVE BODY

Removal

1. Raise the vehicle so that the transmission fluid pan is accessible.
2. Drain the fluid from the transmission by loosening the pan attaching bolts starting at the rear of the pan and working toward the front. When most of the fluid has drained from the pan, remove the remainder of the attaching bolts. Remove the pan and gasket. Discard the gasket.**If the same fluid is to be used again in the transmission, filter the fluid through a 100-mesh screen as it drains from the transmission. Re-use the fluid only if it is in good condition.**

3. Remove the fluid screen retaining clip and the screen.
4. Disconnect the hoses from the vacuum diaphragm unit. Remove the diaphragm unit using Snap-On Tool S8696-A.**Do not use any tools on the diaphragm housing, such as pliers, pipe wrenches, etc. Do not allow solvents to enter the diaphragm unit. Remove the push rod.**
5. Remove the small compensator pressure tube (Fig. 7).
6. Remove the main pressure oil tube first, by gently prying up the end that connects to the main control valve assembly, then, remove the other end of the tube from the pressure regulator.**Be sure to remove the tube in this manner. Failure to do so, could kink or bend the tube causing excessive transmission internal leakage.**
7. Loosen the front servo attaching bolts three turns.
8. Remove the three control valve body attaching bolts, and lower the valve body while pulling it off the front servo tube.**Be careful not to damage the valve body or the tubes.**

Installation

1. Before installing the control valve body, check for a bent manual valve by rolling it on a flat surface.
2. Install the control valve body by aligning the front servo tubes with the holes in the valve body. Shift the manual lever to the 1 detent, and place the inner downshift lever between the downshift lever stop and the downshift valve.**The manual valve must engage the actuating pin in the manual detent lever.**
3. Install but do not tighten, the control valve body attaching bolts.
4. Move the control valve body toward the center of the case until the clearance is less than 0.050 inch, between the manual valve and the actuating pin on the manual detent lever.
5. Torque the attaching bolts to specification. Be sure that the rear fluid screen retaining clip is installed under the valve body bolt as shown in Fig. 7.
6. Install the main pressure oil tube.**Be sure to install the end of the tube that connects to the pressure regulator first. Then, install the other end of the tube into the main control valve assembly by tapping it gently with a soft hammer.**
7. Install the compensator pressure tube to the pressure regulator and the control valve body.

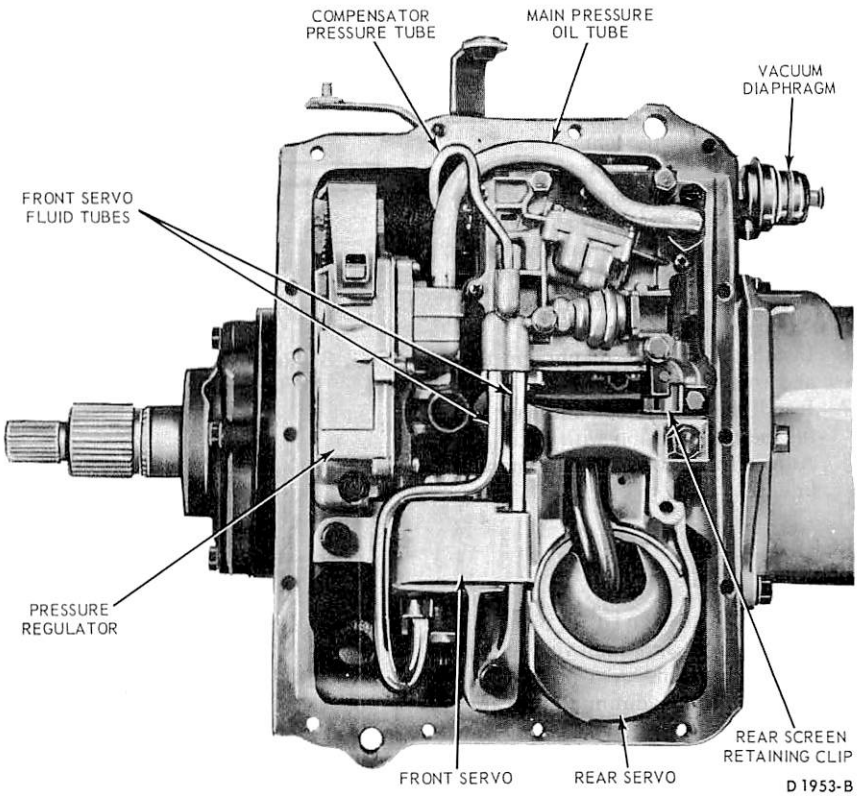

FIG. 7 Typical Hydraulic Control System

8. Turn the manual valve one full turn in each manual lever detent position. If the manual valve binds against the actuating pin in any detent position, loosen the valve body attaching bolts and move the body away from the center of the case. Move the valve body only enough to relieve the binding. Torque the attaching bolts and recheck the manual valve for binding.
9. Position the push rod in the bore of the vacuum diaphragm unit. Using the diaphragm unit as a guide, insert the push rod into the threaded opening of the case. Torque the diaphragm unit to specification. Connect the vacuum hose.
10. Torque the front servo attaching bolts to specification.
11. Adjust the front band.
12. Install the fluid screen and the screen retaining clip.
13. Position a new pan gasket on the bottom of the transmission case, and install the pan. Torque the pan screws to specification.
14. Adjust the rear band.
15. Fill the transmission to the proper level with the specified fluid.**If the fluid that was drained from the transmission is to be used again, filter the fluid through a 100-mesh screen as it is poured back into the transmission. Re-use the fluid only if is in good condition.**
16. If the control valve body was replaced, adjust the transmission control linkage.

FRONT SERVO

Removal

1. Drain the fluid from the transmission, and remove the pan and fluid screen.
2. Remove the vacuum diaphragm unit.
3. Loosen the three control valve body attaching bolts.
4. Remove the attaching bolts from the front servo (Fig. 7), hold the strut with the fingers, and remove the servo.

Installation

1. To install the front servo, position the front band forward in the case with the end of the band facing downward. Make sure the front servo anchor pin is in position in the case web. Align the large end of the servo strut with the servo actuating lever, and align the small end with the band end.

2. Rotate the band, strut, and servo to align the anchor end of the band with the anchor in the case.

Push the servo body onto the control valve body tubes.

3. Install the attaching bolts and torque to specification.
4. Torque the control valve body attaching bolts to specification.

Check the clearance between the manual valve and manual lever actuating pin as given in Control Valve Body Removal and Installation.

5. Adjust the front band.
6. Install the vacuum diaphragm unit and rod.
7. Install the fluid screen and pan, and fill the transmission with fluid.
8. Adjust the downshift and manual linkage.

REAR SERVO

Removal

1. Drain the fluid from the transmission and remove the pan and fluid screen.
2. Remove the vacuum diaphragm unit.
3. Remove the control valve body and the two front servo tubes.
4. Remove the attaching bolts from the rear servo, hold the actuating and anchor struts with the fingers, and remove the servo.

Installation

1. To install the rear servo, position the servo anchor strut on the servo band, and rotate the band to engage the strut.
2. Hold the servo anchor strut in position with the fingers, position the actuating lever strut, and install the servo.
3. Install but do not tighten the servo attaching bolts. **The longer bolt must be installed in the inner bolt hole.**
4. Move the rear servo (with reasonable force) toward the centerline of the transmission case, against the servo attaching bolts. While holding the servo in this position, torque the attaching bolts to specification.
5. Install the two front servo tubes and the control valve body.

Check the clearance between the manual valve and the manual lever actuating pin as given in Control Valve Body Removal and Installation.

6. Adjust the rear band.
7. Install the fluid screen and pan, and fill the transmission with fluid.

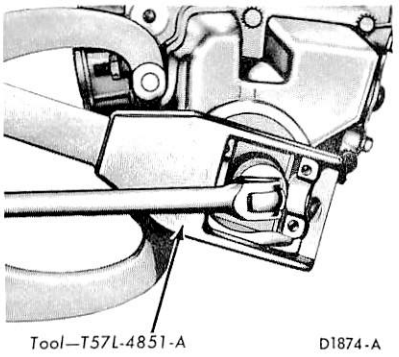

FIG. 8 Removing Companion Flange



FIG. 9 Removing Extension Housing Bearing Snap Ring

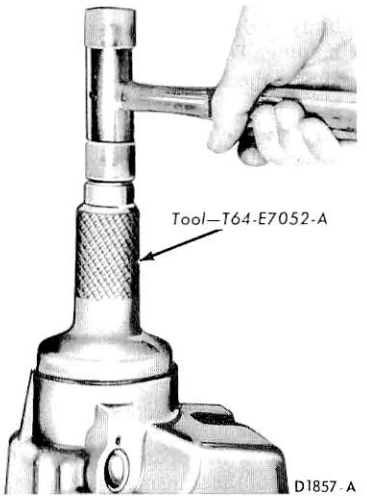

FIG. 10 Installing Extension Housing Seal

EXTENSION HOUSING REAR SEAL AND/OR BEARING

Removal

1. Raise the vehicle and remove the drive shaft. Remove the parking brake drum, if so equipped. Remove the transmission output shaft yoke attaching nut and yoke with the tools shown in Fig. 8
2. With a sharp chisel, remove the seal from the extension housing. Do not allow metal chips to enter the output shaft bearing.
3. To remove the output shaft bearing from the extension housing, remove the bearing retaining snap ring (Fig. 9).
4. Remove the bearing from the extension housing. Install a new bearing.

Installation

1. Install the bearing retaining snap ring. Make sure the snap ring is fully seated in the ring groove of the housing.
2. Install a new extension housing seal using the tool shown in Fig. 10. Install the output shaft yoke and retaining nut. Torque the attaching nut to specifications. Install the parking brake drum, if so equipped.
3. Install the drive shaft and torque the attaching bolts to specification.
4. Lower the vehicle and check the transmission fluid level.

GOVERNOR

Removal

1. Raise the vehicle so that the transmission extension housing is accessible.
2. Remove the governor inspection cover from the extension housing.
3. Rotate the drive shaft until the governor is in line with the inspection hole (Fig. 11).
4. Remove the governor valve body from the counterweight. Do not drop the attaching bolts or the valve parts into the extension housing.

Installation

1. Lubricate the new governor valve parts with transmission fluid. **The valve must move freely in the valve body bore.**
2. Install the governor body on the counterweight so that the valve body cover is facing rearward. Tighten the two attaching bolts securely.
3. Install the governor inspection cover

and a new gasket on the extension housing. Torque the attaching screws to specifications.

PRESSURE REGULATOR

Removal

1. Drain the fluid from the transmission, and remove the pan and fluid screen.
2. Remove the small compensator pressure tube from the control valve body and the pressure regulator (Fig. 7).
3. Remove the main pressure oil tube first, by gently prying up the end that connects to the main control valve assembly, then, remove the other end of the tube from the pressure regulator (Fig. 7).**Besure to remove the tube in this manner. Failure to do so, could kink or bend the tube causing excessive transmission internal leakage.**
4. Remove the pressure regulator spring retainer, springs, and spacer.

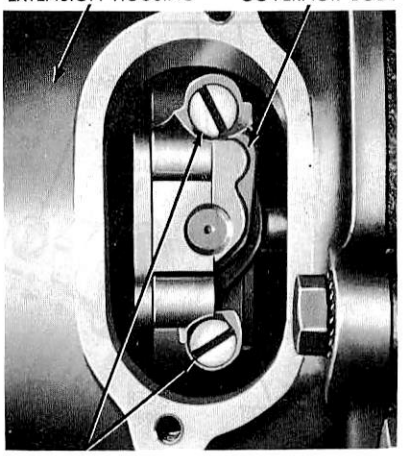

FIG. 11 Governor in Extension Housing

Maintain pressure on the retainer to prevent the springs from flying out.

5. Remove the pressure regulator attaching bolts and washers, and remove the regulator.

Installation

1. Position the replacement regulator body on the transmission case and install the two attaching bolts. Torque the bolts to specification.
2. Check the converter pressure and control pressure valves to be sure the valves operate freely in the bores.
3. Install the valve springs, spacer and retainer.
4. Install the main pressure oil tube.**Be sure to install the end of the tube that connects to the pressure regulator assembly first. Then, install the other end of the tube into the main control assembly by tapping it gently with a soft hammer.**
5. Install the small compensator pressure tube.
6. Install the fluid screen and the pan, and fill the transmission to the correct level with the specified fluid.

DISASSEMBLY AND ASSEMBLY

TRANSMISSION

During the repair of the subassemblies, certain general instructions which apply to all units of the transmission must be followed. These instructions are given here to avoid unnecessary repetition.

Handle all transmission parts carefully to avoid nicking or burring the bearing or mating surfaces.

Lubricate all internal parts of the transmission with the transmission fluid before assembly.**Do not use any other lubricants except on gaskets and thrust washers which may be coated with vaseline to facilitate assembly. Always install new gaskets when assembling parts of the transmission.**

Tighten all bolts and screws to the recommended torque. For detail cleaning and inspection operations refer to Part 17-01.

Disassembly

1. Before removing any of the transmission sub-assemblies, thoroughly clean the outside of the transmission case to prevent dirt from getting inside the mechanism.
2. After the transmission has been removed from the vehicle, disconnect the oil cooler lines at the transmission. Remove the cooler bracket mounting bolts at the transmission and place the assembly in the transmission holder Tool 7000-CJ.
3. Remove the transmission pan, gasket, and screen retainer clip.
4. Lift the screen from the case.
5. Remove the spring seat from the pressure regulator.**Maintain constant pressure on the seat to prevent distortion of the spring seat and the sudden release of the springs.**Remove the pressure regulator springs and pilots, but do not remove valves.
6. Remove the small compensator pressure tube from the pressure regulator and the control valve body.
7. Remove the main pressure oil tube first, by gently prying up the end that connects to the main control valve assembly, then, remove the other end of the tube from the pressure regulator.**Besure to remove the tube in this manner. Failure to do so, could kink or bend the tube causing excessive transmission internal leakage.**
8. Loosen the front and rear servo band adjusting screws five turns. Loosen the front servo attaching bolts three turns.
9. Remove the vacuum diaphragm unit and push rod.
10. Remove the control valve body attaching bolts. Align the levers to permit removal of the valve body. Then lift the valve body clear of the transmission case. Pull the body off the servo tubes and remove it from the case.
11. Remove the regulator from the case. **Keep the control pressure valve and the converter pressure regulator valve in the pressure regulator to avoid damage to the valves.**
12. Remove the front servo apply and release tubes by twisting and pulling at the same time. Remove the front servo attaching bolts. Hold the front servo strut with the fingers, and lift the servo assembly from the case.
13. Remove the rear servo attaching bolts. Hold the actuating and anchor struts with the fingers, and lift the servo from the case.

Transmission End Play Check

1. Remove one of the front pump attaching bolts. Mount the dial indicator support Tool 77067 in the front pump bolt hole. Mount a dial indicator on the support so that the contact rests on the end of the turbine shaft.
2. Pry the output shaft all the way forward by using a screwdriver between the large internal gear and the case.

3. Lightly block the output shaft in the forward position to eliminate all output shaft end play.
4. Move the pinion carrier all the way forward by inserting a screwdriver between the planet carrier and the large internal gear and prying against the case. Maintain slight forward pressure, and set the dial indicator at zero.
5. Measure and record the end play between the front of the case and the large internal gear by prying between the front clutch cylinder and the case. This end play should be 0.010-0.029 inch. Total end play including output shaft end play must not exceed 0.044 inch.

Removal Of Case And Extension Housing Parts

1. Remove the remaining front pump attaching bolts. Then remove the front pump and gasket.

If necessary, tap the screw bosses with soft-faced hammer to loosen the pump from the case. **If the parking brake drum (Fig. 12) is mounted on the transmission, remove the drum and yoke from the output shaft.**

2. Remove the extension housing seal. Remove the lubrication tube from the case. Remove the five transmission to extension housing bolts. These bolts also attach the rear support to the case. Remove the extension housing.
3. Remove the output shaft assembly (Fig. 13). Be careful not to bend the pressure tubes between the distributor sleeve and case as the tubes are removed from the case.
4. Place the output shaft assembly on the bench and remove the oil distributor tubes from the sleeve.
5. Slide the speedometer drive gear off the shaft.
6. If the drive gear ball does not fall out as the speedometer gear is removed, remove the ball from the seat in the output shaft.
7. Remove the distributor sleeve. Remove the four seal rings from the output shaft with the fingers to prevent breaking the rings.
8. Remove the governor snap ring from the output shaft. Slide the governor assembly off the output shaft. Then remove the governor drive ball. Remove the rear pump, extension housing and pump gaskets.
9. Remove the rear pump drive key from the output shaft. Then remove the bronze thrust washer from the output shaft.
10. Remove the selective thrust washer from the rear of the pinion carrier.

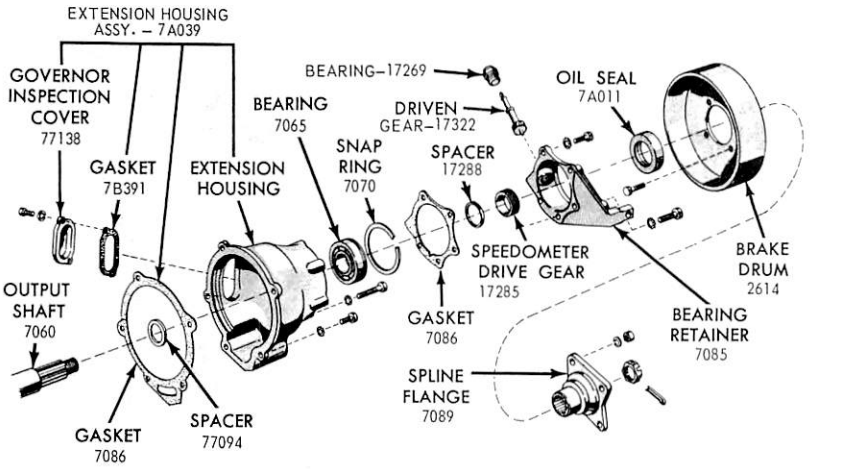

FIG. 12 Parking Brake Drum and Extension Housing Components

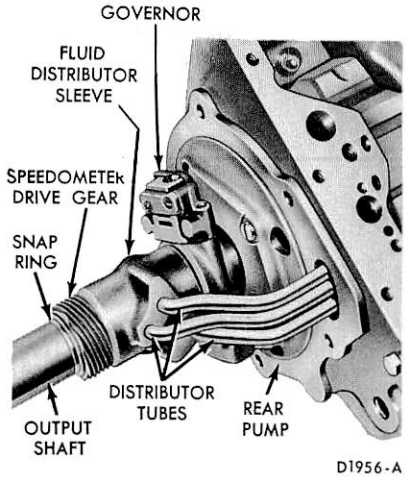

FIG. 13 Output Shaft and Rear Pump Installed

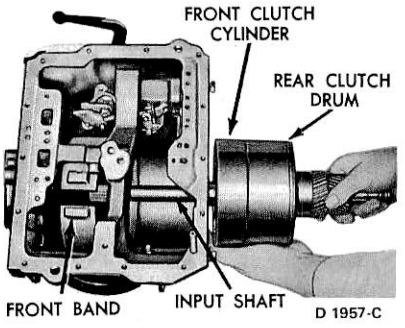

FIG. 14 Removing or Installing Input Shaft and Clutch

11. Remove the two seal rings from the primary sun gear shaft. Remove the pinion carrier.
12. Remove the primary sun gear rear thrust bearing and race from the pinion carrier.
13. Note the rear band position for reference in assembly. The end of the band next to the adjusting screw has a depression (dimple) in the center of the boss. Squeeze the ends of the rear band together, tilt the band to the rear, and remove the rear band from the case.
14. Remove the two center support outer bolts (one each side) from the transmission case.
15. Exert enough pressure on the end of the input shaft to hold the clutch units together. Then remove the center support and the front and rear clutch assemblies as a unit (Fig. 14).
16. Install the clutch assemblies in the bench fixture (Fig. 15).
17. Remove the thrust washer from the front of the input shaft.
18. To remove the front band, position the band ends between the case webbing and tilt the bottom of the band rearward. Then, squeeze the ends of the band together and remove from the rear of the case.
19. Lift the front clutch assembly from the primary sun gear shaft.
20. Remove the bronze and the steel thrust washers from the rear clutch assembly, wire the thrust washers together to assure correct installation.
21. Remove the front clutch seal rings from the primary sun gear shaft.
22. Lift the rear clutch assembly from the primary sun gear shaft.
23. Remove the rear clutch seal rings from the primary sun gear shaft. **Do not break the seal rings.**
24. Remove the primary sun gear front thrust washer.
25. **If the transmission case bushing is to be replaced, press the bushing out**

of the case with the tools shown in Fig. 16.

26. Install a new transmission case bushing with the tool shown in Fig. 16.
27. If the rear brake drum support bushing is to be replaced, press the bushing from the support as shown in Fig. 17.
28. Press a new bushing into the brake drum support with the tool shown in Fig. 17.
29. Remove the output shaft bushing if it is worn or damaged. Use the cape chisel and cut along the bushing seam until the chisel breaks through the bushing wall. Pry the loose ends of the bushing up with an awl and remove the bushing.
30. Insert a new bushing into the installation tool and position the tool and bushing over the output shaft hub. Then, press the bushing on the output shaft hub as shown in Fig. 18.

Assembly

Do not use force to assemble mating parts. If the parts do not assemble freely, examine them for the cause of the difficulty.**Always use new gaskets and seals during the assembly operations.**

1. Install the front band in the transmission case so that the anchor end is aligned with the anchor in the case.
2. Make sure the thrust washer is in place on the input shaft. Lift the clutch assemblies out of the holding block.

Do not allow the clutches to separate.

3. Install the clutch sub-assemblies in the transmission case while positioning the servo band on the drum. Hold the units together while installing them (Fig. 14).

Installation—Center Support

a. Install the center support and the rear band in the case.
b. Install the primary sun gear rear thrust bearing race, needle bearing, and front thrust bearing race in the planet carrier using petroleum jelly to retain them in place.
c. Lubricate the bearing surface on the center support, the rollers of the planetary clutch, and the cam race in the carrier with petroleum jelly (Fig 19).
d. Install the planetary clutch in the carrier (Fig. 20).
e. Carefully position the planet carrier on the center support. Move the carrier forward until the clutch rollers are felt to contact the bearing surface of the center support.
f. While applying forward pressure on the planet carrier, rotate it counterclockwise, as viewed from the rear (Fig. 20). This will cause the clutch rollers to roll toward the large opening end of the cams in the race, compressing the spring slightly, so that the rollers will ride up the chamfer on the planetary support and onto the inner race.
g. Push the planet carrier all the way forward.
h. Check the operation of the planetary clutch by rotating the carrier counterclockwise. It

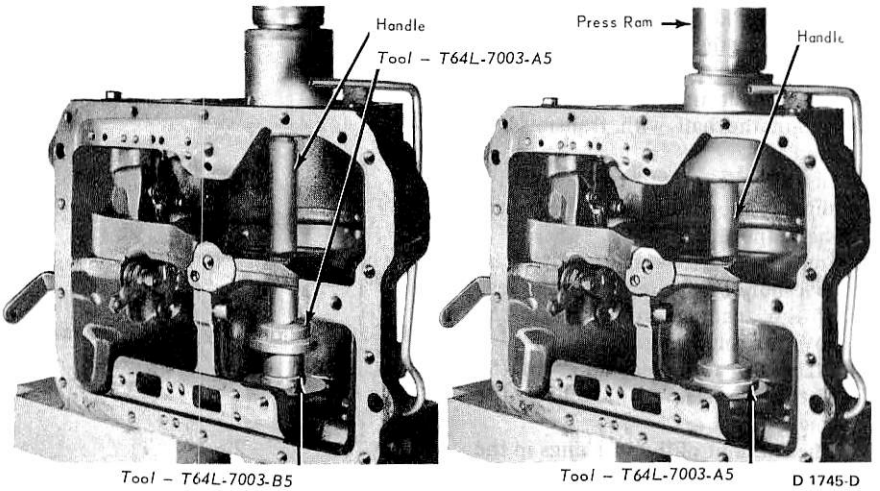

FIG. 16 Replacing Transmission Case Bushing

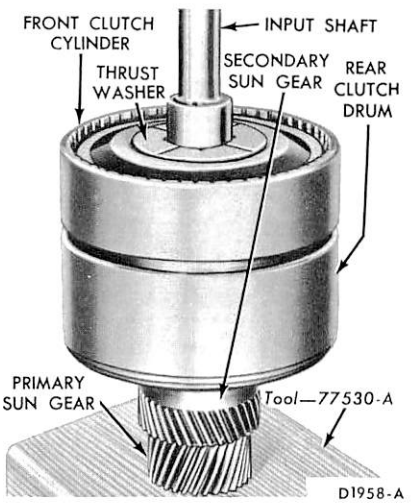

FIG. 15 Input Shaft and Clutch Mounted in Holding Fixture

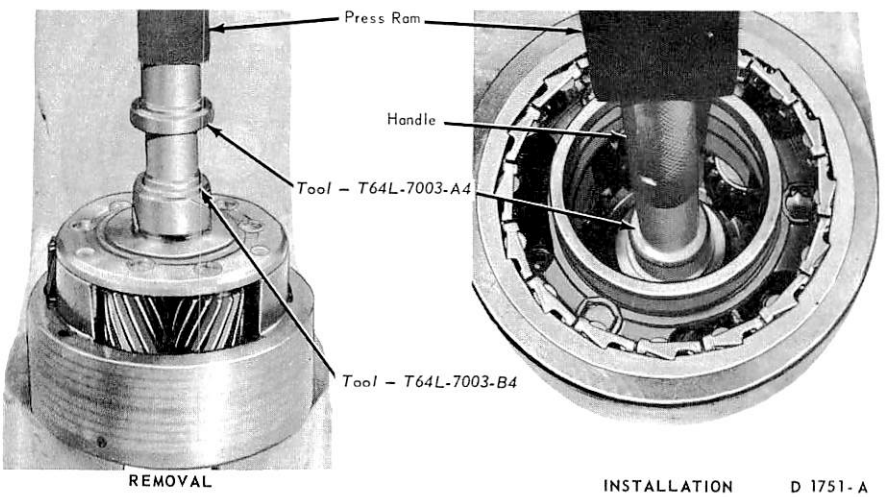

FIG. 17 Replacing Rear Brake Drum Support Bushing

should rotate counterclockwise (viewed from the rear) with a slight drag, and it should lock up when attempting to rotate it in a clockwise direction.

i. Install the selective thrust washer on the pinion carrier rear pilot. **If the end play was not within specifications when checked prior to disassembly, replace the washer with one of proper thickness.** Refer to the Specification Section for selective thrust washer thicknesses.

j. Install the output shaft, carefully meshing the internal gear with the pinions.

4. With the center support properly assembled, position the rear pump drive key in the keyway on the output shaft.
5. Position new front and rear gaskets on the pump body. Retain the gaskets with transmission fluid. Then install the rear pump. **Be sure the drive key is aligned with the keyway in the pump drive gear.**
6. Position the governor drive ball in the pocket in the output shaft. Retain the ball with transmission fluid.
7. Install the governor assembly, aligning the groove with the ball in the output shaft.
8. **Install the governor with the governor body plate toward the rear of the transmission.** Install the governor snap ring.
9. Place the four seal rings in the distributor sleeve, and check the ring gap.
10. Check the fit of the seal rings in the grooves in the output shaft. The rings should rotate freely. Install the rings in the grooves of the output shaft.
11. Install the three tubes in the distrubutor sleeve.
12. Install the distributor sleeve on the output shaft, with the chamfer facing forward. Lubricate the parts to facilitate assembly. Slide the sleeve over the four rings and at the same time start the tubes into the case. The distributor sleeve is located between the governor snap ring and speedometer drive gear.
13. Make sure that the speedometer drive gear lock ball is in place, then install the gear.
14. Install the output shaft ball bearing front spacer and the output shaft ball bearing with the snap ring toward the rear.
15. Install the output shaft rear spacer and the speedometer drive gear.
16. Install the rear bearing retainer gasket and the retainer. Torque the bolts to specification.
17. Install the brake drum if so equipped and/or the U-joint yoke. Torque the nut to specification. Tighten the nut to the nearest cotter pin hole, and install the cotter pin.
18. Position a new front pump gasket in the counterbore of the transmission case.
19. Install the front pump, aligning the

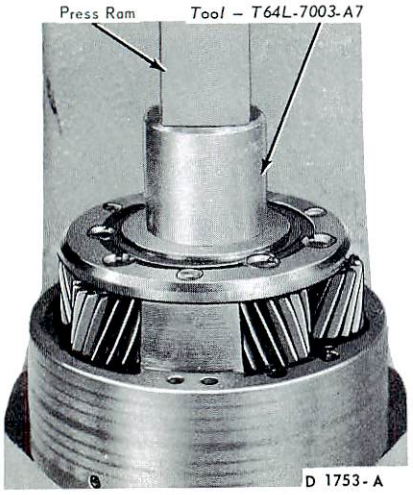

FIG. 18 Installing Output Shaft Bushing

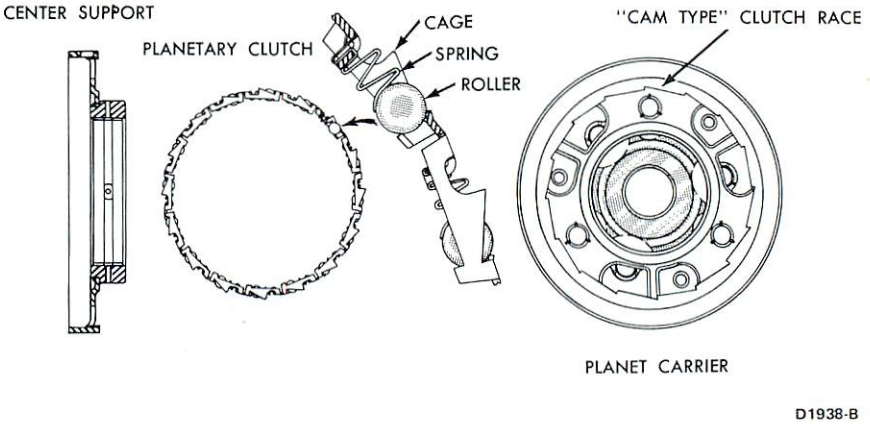

FIG. 19 Planetary Clutch, Planet Carrier and Center Support

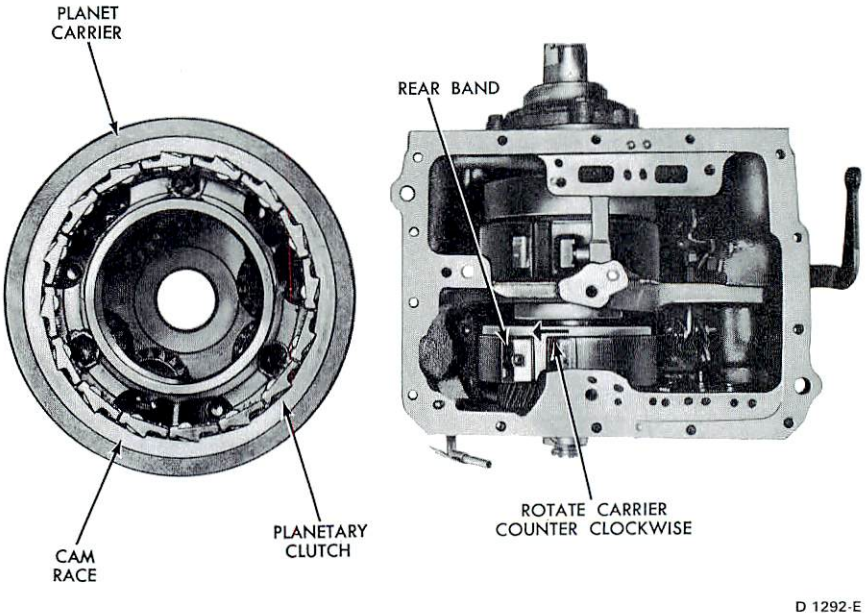

FIG. 20 Planetary Clutch Installation in Carrier

pump bolt holes with the holes in the case. Install three of the front pump attaching bolts and torque them to specification.

20. Mount dial indicator support in a front pump bolt hole. Mount a dial indicator on the support so that the contact rests on the end of turbine shaft.
21. Pry the output shaft all the way forward by using a screwdriver between the large internal gear and the case.
22. Lightly block the output shaft in the forward position to eliminate all output shaft end play.
23. Move the pinion carrier all the way forward by inserting a screwdriver between the planet carrier and the large internal gear and prying against the case. Maintain slight forward pressure, and set the dial indicator at zero.
24. Measure and record the end play between the front of the case and the large internal gear by prying between the front clutch cylinder the the case. This end play should be 0.010-0.029 inch. Total end play including the output shaft, must not exceed 0.044 inch.
25. Remove the dial indicator and install the fourth pump mounting bolt. Torque all four bolts to specification.
26. Position the front band forward in the case with the band ends up.
27. Position the servo strut with the slotted end aligned with the servo actuating lever, and the small end aligned with the band end. Rotate the band, strut, and servo into position engaging the anchor end of the band with the anchor pin in the case.
28. Locate the servo on the case, and install the attaching bolts**Tighten the attaching bolts only 2 or 3 threads.**
29. Install the servo tubes.
30. Position the servo anchor strut, and rotate the rear band to engage the strut.
31. Position the servo actuating lever strut with a finger, and then install the servo and attaching bolts. Move the servo (with reasonable force) toward the centerline of the case, against the attaching bolts. While holding the servo in this position, torque the attaching bolts to specification.
32. Install the pressure regulator body and attaching bolts, and torque the bolts to specifications.
33. Install the control and converter valve guides and springs. Install the spring retainer.
34. Install the control valve assembly, carefully aligning the servo tubes with the control valve. Align the inner downshaft lever between the stop and the downshift valve. Shift the manual lever to the 1 position. **Align the manual valve with the actuating pin in the manual detent lever. Do not tighten the attaching bolts.**
35. Install the main pressure oil tube.**Be sure to install the end of the tube that connects to the pressure regulator assembly first. Then, install the other end of the tube into the main control assembly by tapping it gently with a soft hammer.**
36. Install the small control pressure compensator tube in the valve body and regulator.
37. Move the control valve body toward the center of the case until the clearance is less than 0.050 inch between the manual valve and the actuating pin on the manual detent lever.
38. Torque the attaching bolts to specification. Be sure that the rear fluid screen retaining clip is installed under the valve body bolt as shown in Fig. 7.
39. Turn the manual valve one full turn in each manual lever detent position. If the manual valve binds against the actuating pin in any detent position, loosen the valve body attaching bolts and move the body away from the center of the case. Move the body only enough to relieve the binding. Torque the attaching bolts and check the manual valve for binding.
40. Torque the front servo attaching bolts to specification.
41. Adjust the front and rear bands as detailed in Adjustments.
42. Position the control rod in the bore of the vacuum diaphragm unit and install the diaphragm unit. Make sure the control rod enters the throttle valve as the vacuum unit is installed.
43. Torque the diaphragm unit to specification.
44. Position the fluid screen under the rear clip and over the front pump inlet tube. Press the screen down firmly. Install the screen retaining clip.
45. Place a new gasket on the transmission case and install the pan. Install the attaching bolts and lock washers and torque the bolts to specifications.

If the converter and converter housing were removed from the transmission, install these components. Position the transmission assembly on the transmission jack, and refer to Transmission Installation Procedures for installing the transmission.

CONTROL VALVE BODY

During the disassembly of the control valve assembly, avoid damage to valve parts and keep the valve parts clean. Place the valve assembly on a clean shop towel while performing the disassembly operation.**Do not separate the upper and lower valve bodies and cover until after the valves have been removed.**

Disassembly

1. Remove the manual valve (Fig. 21).
2. Remove the throttle valve body and the separator plate. Be careful not to lose the check valve when removing the separator plate from the valve body. Remove the throttle valve and plug.
3. Remove one screw attaching the separator plate to the lower valve body. Remove the upper body front plate.**The plate is spring-loaded. Apply pressure to the plate while removing the attaching screws.**
4. Remove the compensator sleeve and plug, and remove the compensator valve springs. Remove the compensator valve.
5. Remove the throttle boost short valve and sleeve. Remove the throttle boost valve spring and valve.
6. Remove the downshift valve and spring.
7. Remove the upper valve body rear plate.
8. Remove the compensator cut back valve.
9. Remove the lower body side plate (Fig. 21).**The plate is spring-loaded. Apply pressure to the plate while removing the attaching screws.**
10. Remove the 1-2 shift valve and spring. Remove the inhibitor valve and spring.
11. Remove the two screws attaching the separator plate to the cover. Remove the lower body end plate. **The end plate is spring-loaded. Apply pressure to the plate while removing the attaching screws.**
12. Remove the low servo lockout valve, low servo modulator valve and spring.
13. Remove the 2-3 delay and throttle reducing valve sleeve, the throttle reducing valve, spring, and the 2-3 shift delay valve. The reducing valve sleeve is lightly staked in the valve body bore. To remove the sleeve, use a blunt instrument against the end of the 2-3 shift valve and push the sleeve from its bore. Remove the 2-

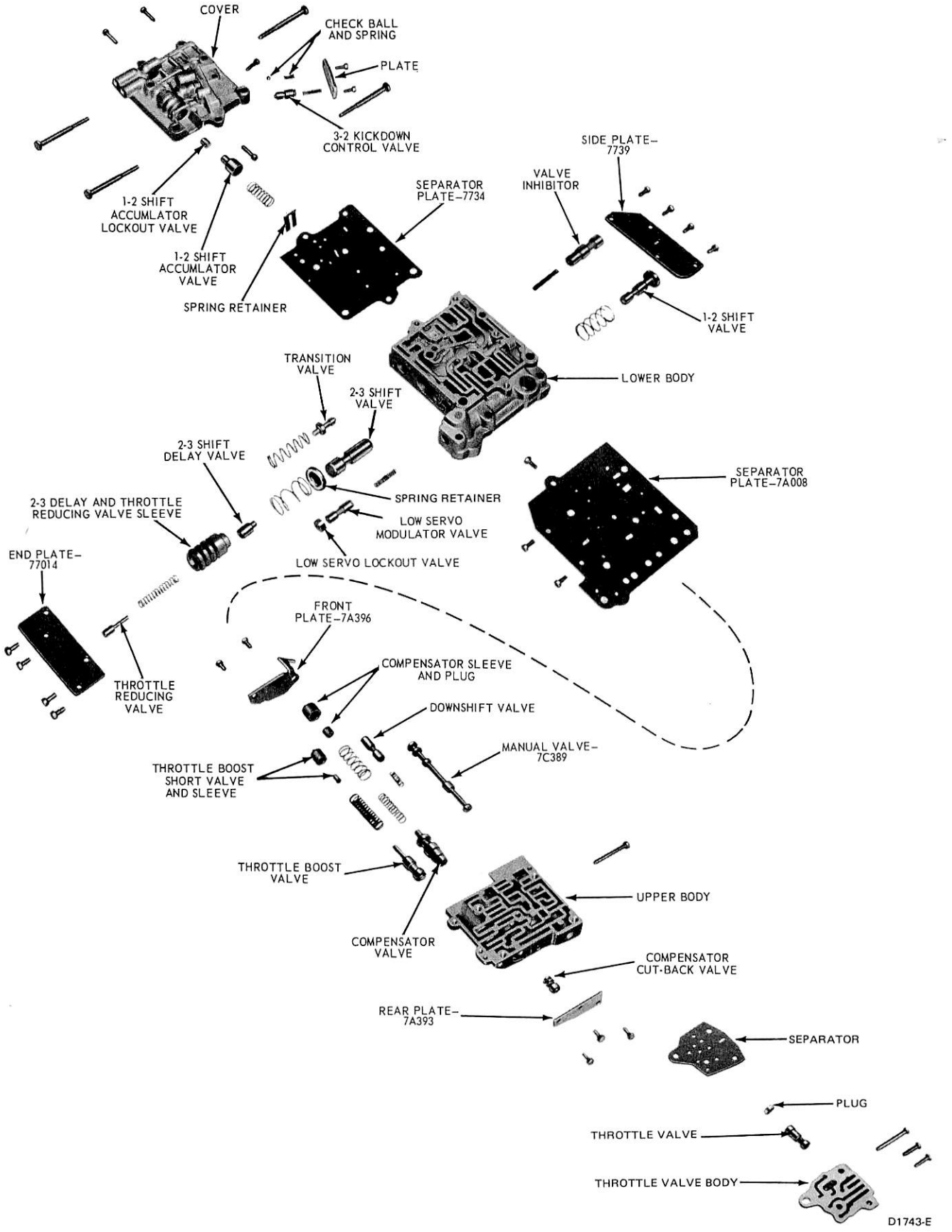

FIG. 21 Control Valve Body Disassembled

3 shift valve spring, spring retainer and valve.
14. Remove the transition valve spring and valve.
15. Remove the plate (Fig. 21) from the valve body cover.
16. Remove the check ball spring and check ball. Remove the 3-2 kickdown control valve spring and valve.
17. Remove the 1-2 shift accumulator valve spring retainer from the cover. Remove the spring, 1-2 shift accumulator valve and 1-2 shift accumulator lockout valve.
18. Remove the through bolts and screws. Then, separate the bodies. Remove the separator plates from the valve bodies and cover. Be careful not to lose the check valves.

Assembly

1. Arrange all parts in their correct positions (Fig. 21). Rotate the valves and plugs when inserting them in their bores to avoid shearing of soft body castings.
2. Place the check valve in the upper body as shown in Fig. 22. Then, position the separator plate on the body.
3. Position thelower body on the upper body, and start **but do not tighten the attaching screws.**
4. Position the cover and separator plate on the lower body. Start the four through bolts.
5. Align the separator with the upper and lower valve body attaching bolt holes. Install and torque the four valve body bolts to specification. **Excessive tightening of these bolts may distort the valve bodies, causing valves or plugs to stick.**
6. Install the 3-2 kickdown control valve and spring and the check ball and spring in the cover. Install the plate.
7. Insert the 1-2 shift accumulator lockout valve, 1-2 shift accumulator valve, and spring in the cover. Install the valve spring retainer.
8. Install the transition valve and spring in the lower body.
9. Install the 2-3 shift valve, spring retainer and spring. Install the 2-3 shift delay valve and the spring and throttle reducing valve in the sleeve. Slide the sleeve and valve into position in the lower body. Do not restake the sleeve.
10. Install the low servo lockout valve spring. Install the low servo modulator and low servo lockout valves. Install the lower body end plate.
11. Install the inhibitor valve spring and valve in the lower body.
12. Install the 1-2 shift valve spring and valve. Install the lower body side plate.
13. Install the compensator cutback valve in the upper body. Install the upper body rear plate.
14. Install the downshift valve and spring in the body.
15. Install the throttle boost valve and spring. Install the throttle boost short valve and sleeve.
16. Install the compensator valve, inner and outer compensator springs, and the compensator sleeve and plug.
17. Position the front plate. Apply pressure to the plate while installing the two attaching screws.
18. Install the throttle valve, plug and check valve in the throttle valve body. Position the separator on the upper body and install the throttle valve body. Install the three attaching screws.
19. Install four screws attaching the cover to the lower body, two screws attaching the separator plate to the upper body, and one screw attaching the separator plate to lower body. Torque the cover and body screws to specification.
20. Install the manual valve.

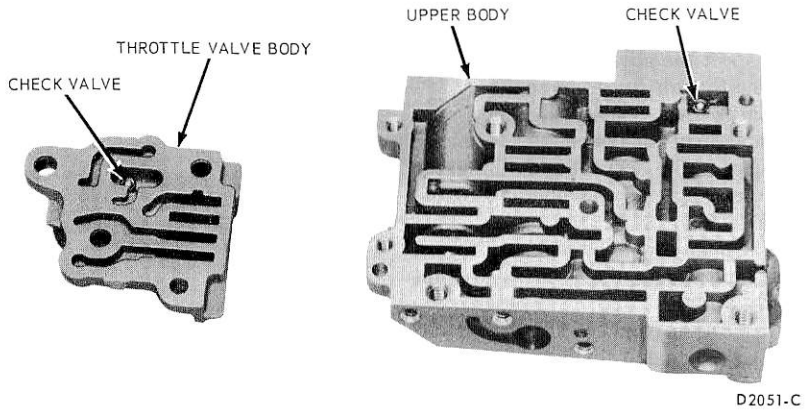

FIG. 22 Check Valve Locations

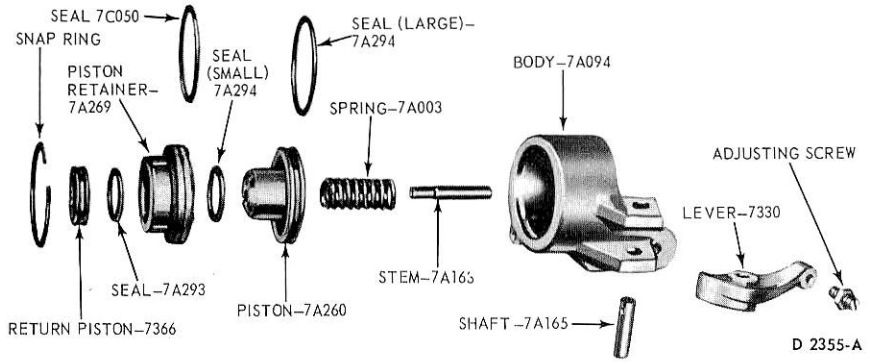

FIG. 23 Front Servo Disassembled

FRONT SERVO

Disassembly

1. Remove the servo piston retainer snap ring (Fig. 23). The servo piston is spring-loaded.**Apply pressure to the piston when removing the snap ring.**
2. Remove the servo piston retainer, servo piston, and the return piston from the servo body. It may be necessary to tap the piston stem lightly with a soft-faced hammer to separate the piston retainer from the servo body.
3. Remove all the seal rings, and remove the spring from the servo body.
4. Inspect the servo body for cracks and the piston bore and the servo piston stem for scores (Fig. 23). Check fluid passages for obstructions.
5. Check the actuating lever for free movement, and inspect it for wear. To replace the actuating lever shaft, it will be necessary to press the shaft out of the bracket. The shaft is retained in the body by serrations on one end of the shaft. These

serrations cause a press fit at that end. To remove the shaft, press on the end opposite the serrations.

Inspect the adjusting screw threads and the threads in the lever.

6. Check the servo spring and servo band strut for distortion.
7. Inspect the servo band lining for excessive wear and bonding to the metal.

The band should be replaced if worn to a point where the grooves are not clearly evident.

8. Inspect the band ends for cracks and check the band for distortion.

Assembly

1. Lubricate all parts of the front servo with transmission fluid to facilitate assembly.
2. Install the inner and outer O-rings on the piston retainer. Install a new O-ring on the return piston and on the servo piston (Fig. 23).
3. Position the servo piston release spring in the servo body. Install the servo piston, retainer, and return piston in the servo body as an assembly. Compress the assembly into the body, and secure it with the snap ring.**Make sure the snap ring is fully seated in the groove.**
4. Install the adjusting screw and lock nut in the actuating lever if they were previously removed.

REAR SERVO

Disassembly

1. Remove the servo actuating lever shaft retaining pin with a 1/8 inch punch. Remove the shaft, actuating lever needle bearings and thrust washers if so equipped.
2. Press down on the servo spring retainer, and remove the snap ring. **Release the pressure on the retainer slowly to prevent the spring from flying out.**
3. Remove the retainer and servo spring (Fig. 24).
4. Force the piston out of the servo body with air pressure. Hold one hand over the piston to prevent damage.
5. Remove the accumulator piston from the servo piston.
6. Remove the piston seal ring.

Assembly

1. Install a new seal ring on the servo piston.
2. Install the accumulator piston in the servo piston.
3. Install the piston in the servo body. **Lubricate the parts to facilitate assembly.**Install the servo spring with the small coiled end against the servo piston.

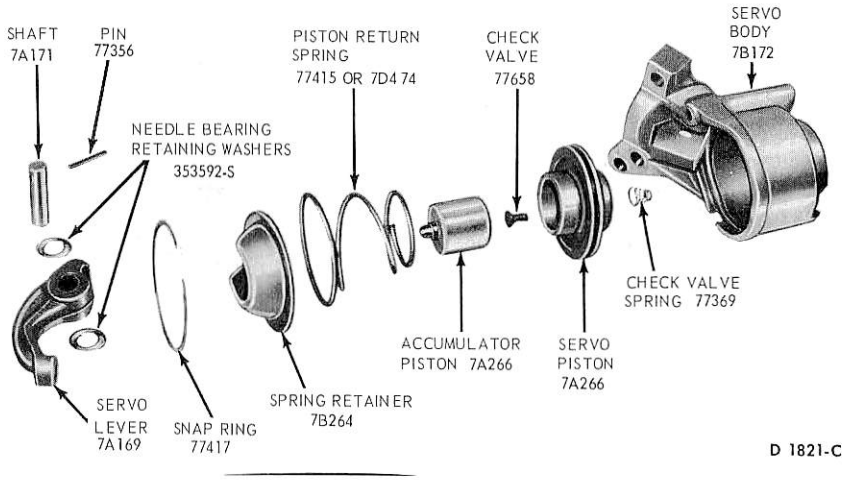

FIG. 24 Rear Servo Disassembled

4. Install the spring retainer. Compress the spring with a C-clamp. Then install the snap ring.**The snap ring must be fully seated in the groove.**
5. Install the needle bearings (if so equipped) in the actuating lever. Install the actuating lever and thrust washers (if so equipped) with the socket in the lever bearing on the piston stem. Install the actuating lever shaft, aligning the retaining pin holes, and install the pin.
6. Check the actuating lever for free movement.

GOVERNOR

Disassembly

1. Remove the governor valve body cover.
2. Remove the valve body from the counterweight.
3. Remove the plug, sleeve, and the valve and spring from the body (Fig. 25).
4. Remove the screen from its bore in the valve body.

Assembly

1. Install the governor valve and spring assembly in the bore of the valve body. Install the sleeve, and plug.
2. Install the screen.
3. Install the body on the counterweight.**Make sure the fluid passages in the body and the counterweight are aligned.**
4. Position the valve body cover on the body, and install the screws.

PRESSURE REGULATOR

Disassembly

1. Remove the valves from the regulator body.

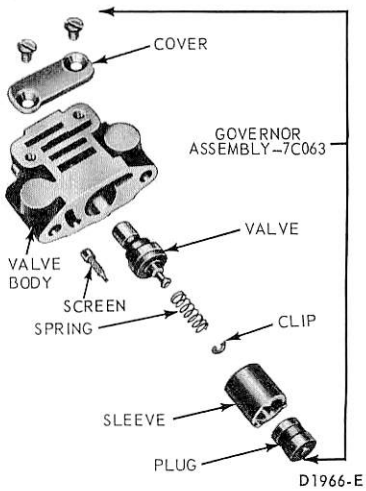

FIG. 25 Governor Disassembled

2. Remove the regulator body cover attaching screws, and remove the cover (Fig. 26).
3. Remove the separator plate.
4. Wash all parts thoroughly in clean solvent and blow dry with moisture-free compressed air.
5. Inspect the regulator body and cover mating surfaces for burrs.
6. Check all fluid passages for obstructions.
7. Inspect the control pressure and converter pressure valves and bores for burrs and scores. Remove all burrs carefully with crocus cloth.
8. Check the free movement of the valve in their bores. Each valve should fall freely into its bore when both the valve and bore are dry.
9. Inspect the valve springs for distortion.

Assembly

1. Position the separator plate on the regulator cover.
2. Position the regulator cover and separator plate on the regulator body, and install the attaching screws. Torque the screws to specification.
3. Insert the valves in the pressure regulator body (Fig. 26).

DOWNSHIFT AND MANUAL LINKAGE

Disassembly

1. Remove the inner downshift lever shaft nut (Fig. 27). Then remove the inner downshift lever.
2. Remove the outer downshift lever and shaft. Remove the downshift shaft seal from the counterbore in the manual lever shaft.
3. Remove the cotter pin from the parking pawl toggle operating rod and remove the clip from the parking pawl operating lever. Remove the parking pawl operating rod.
4. Rotate the manual shaft until the detent lever clears the detent plunger. Then remove the detent plunger and spring. **Do not allow the detent plunger to fly out of the case.**
5. Remove the manual lever shaft nut, and remove the detent lever. Remove the outer manual lever and shaft from the transmission case.
6. Tap the toggle lever sharply toward the rear of the case to remove the plug and pin.
7. Remove the pawl pin by working the pawl back and forth. Remove the pawl and toggle lever assembly, and then disassemble.
8. Remove the manual shaft seal and case vent tube.

Assembly

1. Coat the outer diameter of a new manual shaft seal with sealer, then install the seal in the case with a driver.
2. Install the vent tube in the transmission case.
3. Assemble the link to the pawl with the pawl link pin, washer, and pawl return spring. Assemble the toggle lever to the link with the toggle link pin. Position the pawl return spring over the toggle link pin, and secure it in place with the washer and the small retainer clip (Fig. 27). Install the assembly in the transmission case by installing the pawl pin and the toggle lever pin. Install the torsion lever assembly. Position the spring on the torsion lever with a screwdriver. Make certain that the short side of toggle does not extend beyond the largest diameter of the ball or the toggle lever pin (Fig. 27). Tap the toggle lever in or out as necessary to center the toggle lever on the ball.
4. Install the manual lever and shaft in the transmission case. Position the detent lever on the shaft, and secure it with a nut. Tighten the nut to 20-30 ft-lbs torque. Rotate the manual lever to the rear of the case. Position the detent spring in the case. Hold the detent plug on the spring with a 3/16 inch socket wrench, then depress the spring until the plug is

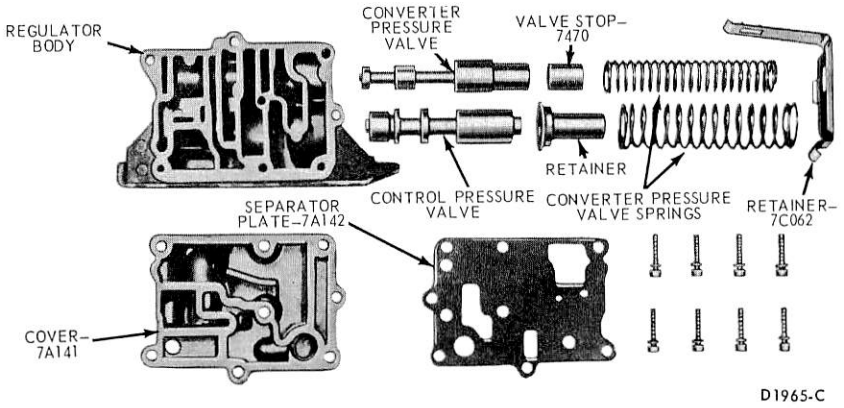

FIG. 26 Pressure Regulator Disassembled

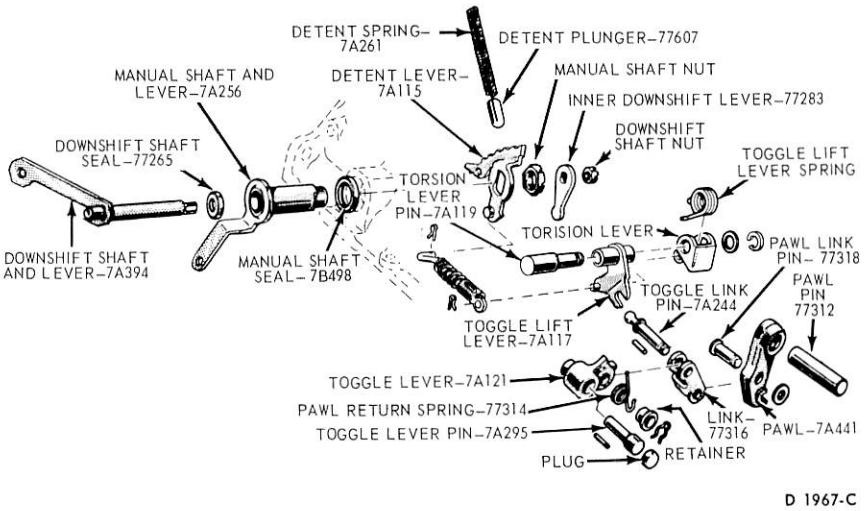

FIG. 27 Transmission Case Control Linkage

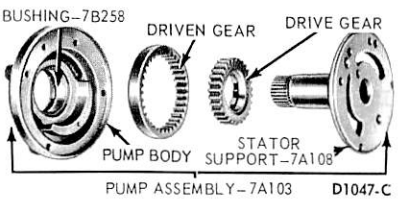

FIG. 28 Front Pump Disassembled

flush with the case. Carefully rotate the manual lever to the front of the case to secure the plug.**A piece of thin walled tubing may be used to depress the plug if a small socket wrench is not available.**

5. Position the ends of the parking pawl operating rod in the detent lever and toggle lift lever, and secure with the two small retaining pins.
6. Install a new seal on the downshift lever shaft, then install the lever and shaft in the case. Position the inner downshift lever on the inner end of the shaft with the mark 0 facing toward the center of the case. Install the lock washer and nut, then tighten the nut to 17-20 ft-lbs torque.
7. Check the operation of the linkage. The linkage should operate freely without binding.

FRONT PUMP

Disassembly

1. Remove the stator support attaching screws and remove the stator support. Mark the top surface of the pump driven gear with Prussian blue to assure correct assembly.**Do not scratch the pump gears.**
2. Remove the drive and driven gears from the pump body.
3. Refer to Fig. 28 for a disassembled view of the front pump. Inspect the pump body housing, gear pockets and crescent for scores.
4. If the pump housing bushing is to be replaced, press the bushing from the front housing with the tools shown in Fig. 29.
5. Press a new bushing into the pump housing with the handle and tool shown in Fig. 29.
6. If any parts other than the stator support, bushings or oil seal are found defective, replace the pump as a unit. Minor burrs and scores may be removed with crocus cloth. The stator support is serviced separately.
7. Bolt the front pump to the transmission case with capscrews.
8. If the oil seal requires replacement, install the oil seal remover shown in Fig. 30. Then pull the front seal from the pump body.
9. Clean the pump body counterbore. Then inspect the bore for rough spots. Smooth up the counterbore with crocus cloth.
10. Remove the pump body from the transmission case.

Assembly

1. If the oil seal was removed, coat the outer diameter of a new seal with FoMoCo sealing compound, or its equivalent. Then position the seal in the pump body. Drive the seal into the pump body with the tool shown in Fig. 31 until the seal is firmly seated in the body.
2. Place the pump driven gear in the pump body with the mark on the gear facing down. Install the drive gear in the pump body with the chamfered side of the flats facing down.
3. Install the stator support and attaching screws. Check the pump gears for free rotation.

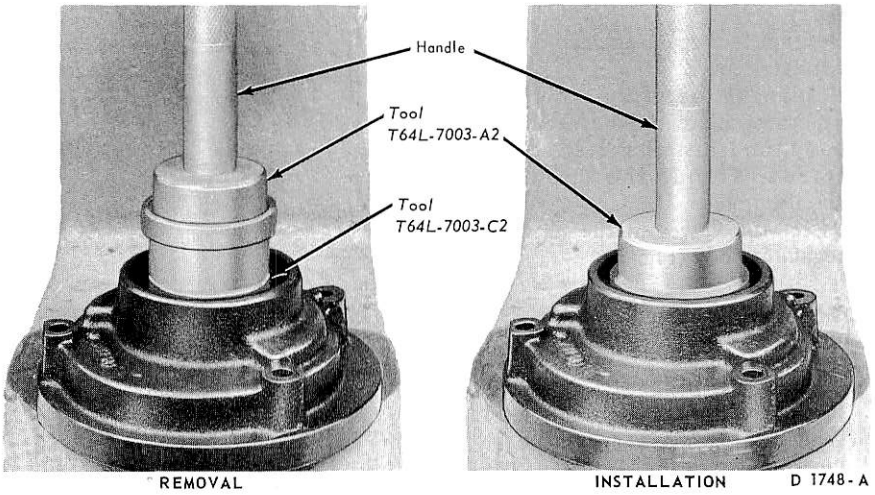

FIG. 29 Replacing Front Pump Housing Bushing

REAR PUMP

Disassembly

1. Remove the screws and lock washers which secure the pump cover to the pump body, and remove the cover.
2. Remove the drive gear from the pump body.
3. If the pump housing bushing is worn or damaged, replace the bushing with the tools shown in Fig. 32.

Assembly

1. Install the drive gear in the pump body.
2. Install the pump cover, attaching screws, and lock washers. Torque the screws to specification.

REAR CLUTCH

Disassembly

1. Remove the clutch pressure plate snap ring, and remove the pressure plate from the drum. Remove the waved cushion spring. Remove the composition and steel plates.
2. Compress the spring with the tools shown in Fig. 33 and remove the snap ring.
3. Guide the spring retainer while releasing the pressure to prevent the retainer from locking in the snap ring grooves.
4. Position the primary sun gear shaft in the rear clutch. Place an air hose nozzle in one of the holes in the shaft, and place one finger over the other hole. Then force the clutch piston out of the clutch drum with air pressure.**Hold one hand over the piston to prevent damage to the piston.**
5. Remove the inner and outer seal rings from the clutch piston.

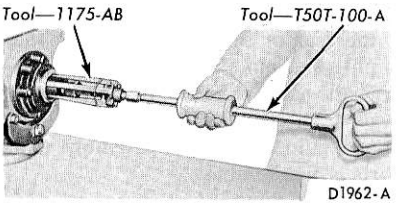

FIG. 30 Removing Front Pump Seal

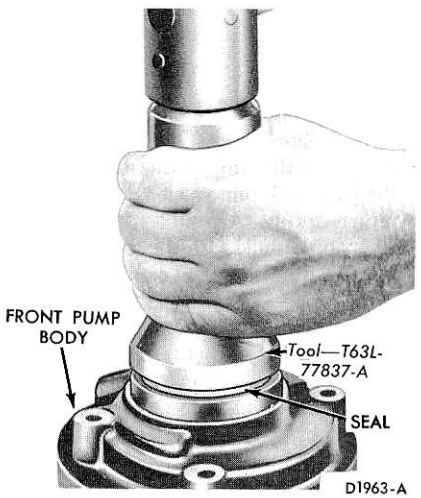

FIG. 31 Installing From Pump Seal

6. Remove the rear clutch sun gear bushing if it worn or damaged. Use the cape chisel (Fig. 34) and cut along the bushing seam until the chisel breaks through the bushing wall. Pry the loose ends of the bushing up with an awl and remove the bushing.

Assembly

1. If the rear clutch sun gear bushing was removed, press a new bushing into the rear clutch sun gear with the tool shown in Fig. 35.
2. Install new inner and outer seal rings on the piston.
3. To install the piston in the clutch drum, lubricate the piston seals and tools (Fig. 36) with clean transmission fluid. Push the small fixture down over the cylinder hub. Insert the piston into the large fixture with the seal toward the thin-walled end. Hold the piston and large fixture and insert as a unit into the cylinder. Push down over the small fixture until large tool stops against the shoulder in the cylinder; then push the piston down, out of the tool, until it bottoms in the cylinder, remove the tools.
4. Install the clutch release spring, and position the retainer on the spring.
5. Install the tool on the spring retainer as shown in Fig. 33. Compress the clutch spring, and install the snap ring. **While compressing the spring, guide the retainer to avoid interference of the retainer with the snap ring groove. Make sure the snap ring is fully seated in the groove.** When new composition clutch plates are used, soak the plates in automatic transmission fluid for 15 minutes before they are assembled.
6. Install the external tabbed waved cushion spring. Then, install the composition and the steel clutch plates alternately, starting with a steel plate.
7. Install the clutch pressure plate with the bearing surface down. Then install the clutch pressure plate snap ring. Make sure the snap ring is fully seated in the groove.
8. Check the free pack clearance between the pressure plate and the first internal plate with a feeler gauge. The clearance should be 0.030-0.055 inch. If the clearance is not within specifications, selective snap rings are available in the following thicknesses; 0.060-0.064, 0.074-0.078, 0.088-0.092 and 0.102-0.106 inch. Insert the correct size snap ring and recheck the clearance.

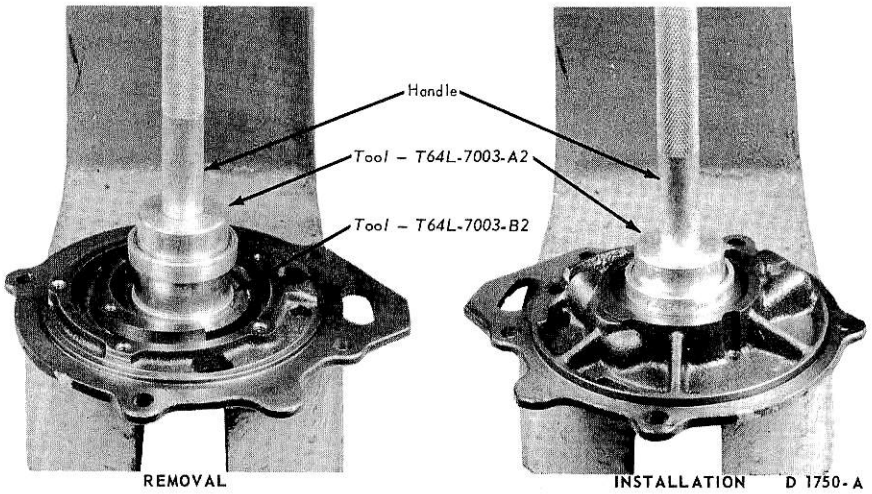

FIG. 32 Replacing Rear Pump Housing Bushing

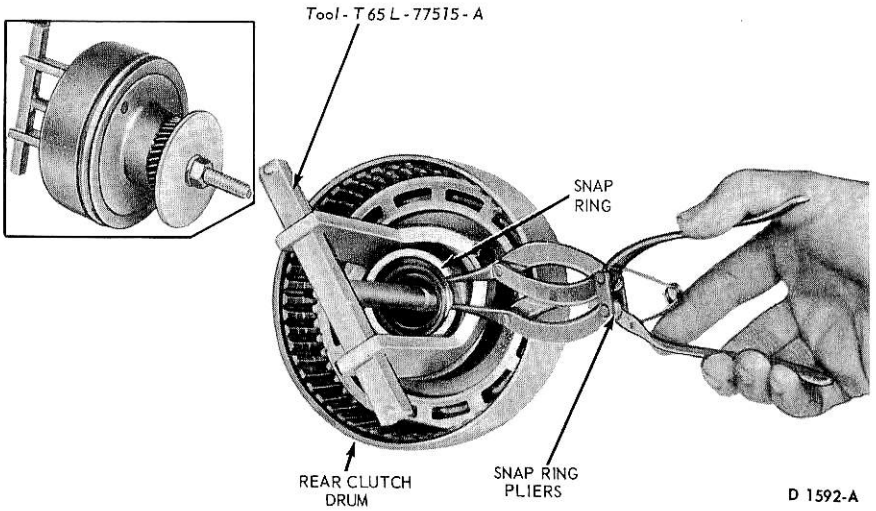

FIG. 33 Removing Rear Clutch Spring Snap Ring

9. Install the thrust washer on the primary sun gear shaft. Be sure the thrust washer is installed with the tabs of the washer away from the sun gear thrust face. Lubricate all parts with automatic transmission fluid or petroleum jelly. Install the two center seal rings.
10. Install the rear clutch on the primary sun gear shaft. **Be sure all of the needles are in the hub if the unit is equipped with loose needle bearings.** Assemble two seal rings in the front grooves.
11. Install the steel and the bronze thrust washers on the front of the secondary sun gear assembly. If the steel washer is chamfered, place the chamfered side down.

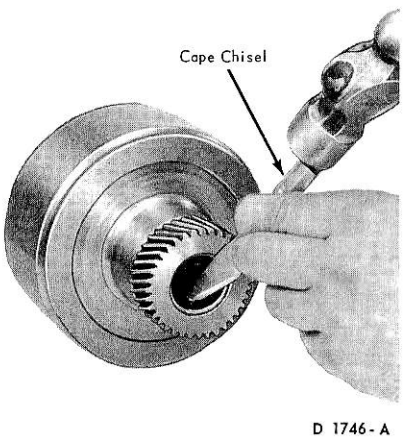

FIG. 34 Removing Rear Clutch Sun Gear Bushing

FRONT CLUTCH

Disassembly

1. Remove the clutch cover snap rings

with a screwdriver, and remove the input shaft from the clutch drum.
2. Remove the thrust washer from the thrust surface of the clutch hub. Insert one finger in the clutch hub, and lift the hub straight up to remove the hub from the clutch drum.
3. Remove the composition and the steel clutch plates, and then remove the pressure plate from the clutch drum.
4. Place the front clutch spring compressor on the release spring, position the clutch drum on the bed of an arbor press, and compress the release spring with the arbor press until the release spring snap ring can be removed (Fig. 37).
5. Remove the clutch release spring from the clutch drum.
6. Install the special nozzle shown in Fig. 38 on an air hose. Place the nozzle against the clutch apply hole in the fron clutch housing, and force the piston out of the housing.
7. Remove the piston inner seal from the clutch housing. Remove the piston outer seal from the groove in the piston.
8. Remove the input shaft bushing if it is worn or damaged. Use the cape chisel and cut along the bushing seam until the chisel breaks through the bushing wall. Pry the loose ends of the bushing up with an awl and remove the bushing.

Assembly

1. If the input shaft bushing was removed, slip a new bushing over the end of the installation tool and position the tool and bushing to the bushing hole. Then, press the bushing into the input shaft as shown in Fig. 39.
2. Lubricate all parts with transmission fluid. Install a new piston inner seal ring in the clutch cylinder. Install a new piston outer seal in the groove in the piston.
3. Install the piston in the clutch housing. Make sure the steel bearing ring is in place on the piston.
4. Position the release spring in the clutch cylinder with the concave side up. Place the release spring compressor on the spring, and compress the spring with an Arbor Press. Then install the snap ring as shown in Fig. 37. **Make sure the snap ring is fully seated in the groove.**
5. Install the front clutch housing on the primary sun gear shaft by rotating the clutch units to mesh the rear clutch plates with the serrations on the clutch hub. **Do not breake the seal rings.**

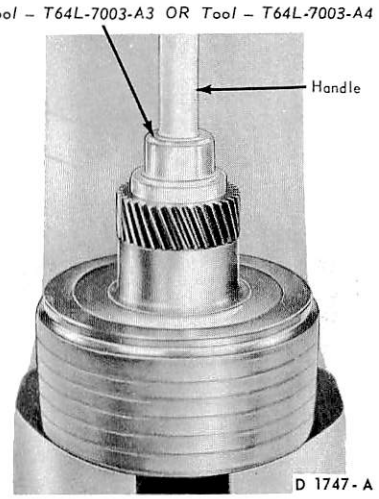

FIG. 35 Installing Rear Clutch Sun Gear Bushing

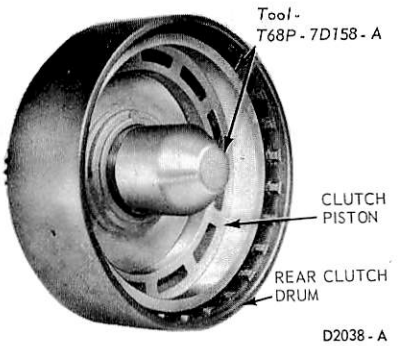

FIG. 36 Installing Rear Clutch Piston

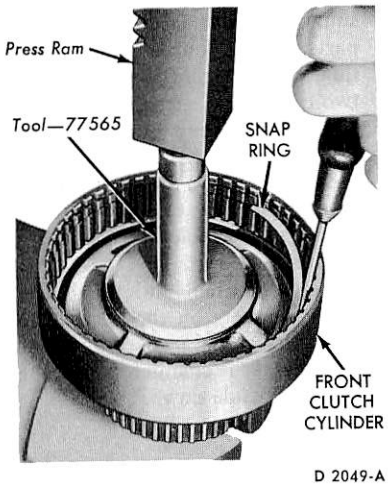

FIG. 37 Removing or Installing Front Clutch Snap Ring

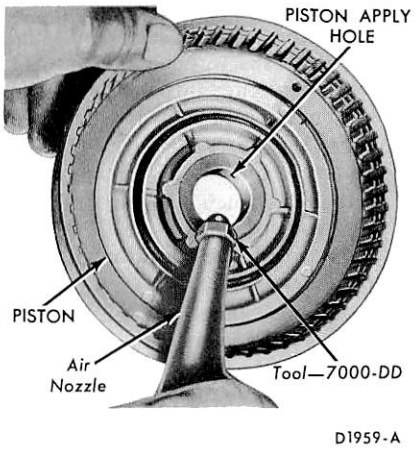

FIG. 38 Removing Front Clutch Piston

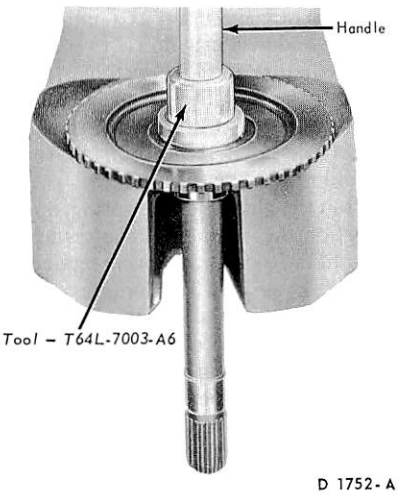

FIG. 39 Installing Input Shaft Bushing

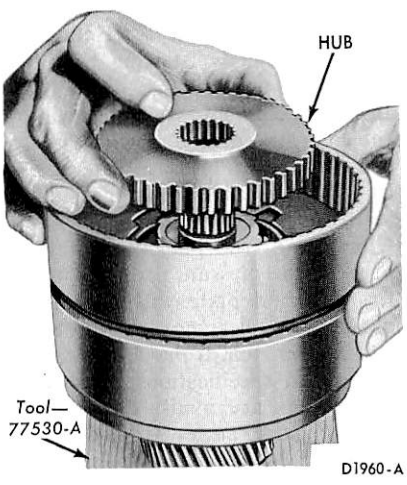

FIG. 40 Installing Front Clutch Hub

6. Install the clutch hub in the clutch cylinder with the deep counterbore down (Fig. 40). Install the thrust washer on the clutch hub.
7. Install the pressure plate in the clutch cylinder with the bearing surface up (Fig. 41). Install the composition and the steel clutch plates alternately, starting with a composition plate (Fig. 42). When new composition clutch plates are used, soak the plates in automatic transmission fluid for 15 minutes before they are assembled.

The final friction plate to be installed is selective. Install the thickest plate that will be a minimum of 0.010 inch below input shaft shoulder in cylinder. For all other plates, use the thinnest available. Refer to the Specifications Section for available plate thicknesses.

8. Install the turbine shaft in the clutch cylinder, and then install the snap ring. **Make sure the snap ring is fully seated in the groove.**
9. Install the thrust washer on the turbine shaft.

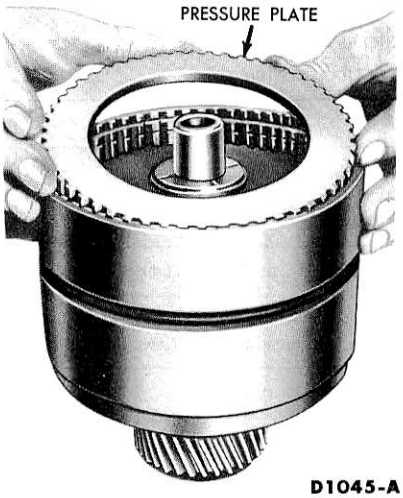

FIG. 41 Installing Pressure Plate

PRIMARY SUN GEAR SHAFT

Disassembly

1. Position the primary sun gear shaft in the clutch bench fixture.



FIG. 42 Installing Clutch Plates

2. Check the fit of the seal rings in their respective bores. A clearance of 0.002-0.009 inch should exist between the ends of the rings.

Assembly

1. Replace the seal rings, and check for free movement in the grooves.

SPECIFICATIONS

APPROXIMATE REFILL CAPACITIES

FMX TRANSMISSION

Transmission Model	U. S. Measure	Imperial Measure
All	11 qts.	9-1/4 qts.

CHECKS AND ADJUSTMENTS

FMX TRANSMISSION

Operation	Specifications
Transmission End Play Check	0.010-0.029 plus end play between output shaft ball bearing and retainer. Not to exceed a total of 0.044 inch (Selective Thrust Washers Available)
Turbine and Stator End Play Check	New or rebuilt 0.023 maximum. Used 0.040 maximum.
Front Band Adjustment (Use 1/4 inch spacer between adjustment screw and servo piston stem)	Adjust screw to 10 in-lbs torque. Remove spacer, then tighten screw an additional 3/4 turn. Hold screw and tighten lock nut.
Rear Band Adjustment	Adjust screw to 10 ft-lbs torque, and back off 1-1/2 turns. Hold screw and tighten lock nut.
Primary Sun Gear Shaft Ring End Gap Check	0.002-0.009

CLUTCH PLATES FMX TRANSMISSION

Transmission Model	Forward Clutch				Rear Clutch		
	Steel Plates	Friction Plates	Selective Plate Thickness	Selective Plate Identification	Steel Plates	Friction Plates	Free Pack Clearance
PHC	4	5 ①	0.0565-0.0605 0.0705-0.0745 0.0845-0.0885 0.0985-0.1025	No Stripe One Stripe Two Stripes Three Stripes	4	4	0.030-0.055

① Last plate (friction) in forward clutch is selective, install thickest plate in pack that will be a minimum of 0.010 inch below input shaft shoulder in cylinder. All other friction plates in pack are thinnest available.

SELECTIVE THRUST WASHERS FMX TRANSMISSION

Identification No.	Thrust Washer Thickness – Inch
By Thickness	0.061-0.063
	0.067-0.069
	0.074-0.076
	0.081-0.083
	0.092-0.094
	0.105-0.107

TORQUE LIMITS FMX TRANSMISSION

Item	In-Lbs
Rear Pump Cover Screws (10-24)	25-35
(1/4-20)	80-90
Governor to Counterweight	50-60
Governor Valve Body Cover Screws	20-30
Pressure Regulator Cover Screws	20-30
Lower Body and Cover Plate to Valve Body	20-30

Item	In-Lbs
Control Valve Body Screws (10-24)	20 30
Front Servo Release Piston	20 30
End Plates to Body	20 30
Stator Support to Pump	23 35
Governor Inspection Cover to Extension	50 60
T.V. Body to Valve Body	20 30

Item	Ft-Lbs
Converter to Flywheel	23-28
Converter Housing to Trans. Case	40-50
Front Pump to Trans. Case	17-22
Front Servo to Trans. Case	30-35
Rear Servo to Trans. Case	40-45
Upper Valve Body to Lower Valve Body	4-6
Oil Pan to Case	10-13
Converter Cover to Converter Housing	12-16
Regulator to Case	17-22
Planetary Support Locating Screw	20-30
Control Valve Body to Trans. Case	8-10
Rear Bearing Retainer to Extension	28-38
Output Shaft Yoke Nut	150-200

Item	Ft-Lbs
Converter Drain Plug	15 28
Extension Assembly to Trans. Case	30 40
Pressure Gauge Tap	7 15
Rear Band Adjusting Screw Locknut	35 40
Front Band Adjusting Screw Locknut	20 25
Manual Valve Inner Lever to Shaft	30 40
Downshift Lever to Shaft	17 20
Filler Tube to Engine	20 25
Transmission to Engine	40 50
Diaphragm Assembly to Case	15 23
Oil Cooler Mounting Bracket	16 21

SPECIAL TOOLS FMX TRANSMISSION

Ford Tool No.	Former No.	Description	Ford Tool No.	Former No.	Description
T50T-100-A and	1175-AE	Seal Remover	T68P-7D158		Seal Installer and Protector
TOOL-1175-AB			T58L-7195-A		Band Adjustment Wrench
T57L-4851-A		Flange Holder	TOOL-7225-C	7225-B	Front Band Adjustment Wrench
TOOL-7000-DD	7000-DD	Air Nozzle Rubber Tip Assembly	TOOL-7225-C13-B	7225-C13-B	Gauge Block and Chain Assembly
TOOL-7000-CJ	7000-CC	Transmission Overhaul Holding	TOOL-77067		Dial Indicator Support Fixture
	7000-CJ	Fixture	T65P-77370-A		Rear Band Torque Wrench
T64L-7003-A		Automatic Transmission Bushing Kit	T65L-77515-A		Rear Clutch Spring Compressor
		Remover and Replacer	TOOL-77530-A	77530-A	Clutch Assembly Fixture
T64E-7052-A		Transmission Ext. Housing Oil Seal	TOOL-77565	77530	Front Clutch Spring Compressor
		Repl.	T63L-77837-A	77837-A	Front Pump Seal Replacer

PART 17-27 AT-540 Automatic Transmission

Applies To B-C-F-LN-600, 700, 750, and C-800 Only

COMPONENT INDEX	Page	COMPONENT INDEX	Page
CENTER SUPPORT		OIL PUMP	
Disassembly and Assembly	27-18	Disassembly and Assembly	27-16
CONTROL VALVE BODY		PLANETARY GEARS AND SHAFTS	
Disassembly and Assembly	27-13	Disassembly and Assembly	27-19
Removal and Installation	27-06	SELECTOR LEVER LINKAGE	
CONVERTER END PLAY CHECK	27-03	Adjustment	27-04
CONVERTER LEAKAGE CHECK	27-03	Checking	27-03
DESCRIPTION	27-01	SELECTOR SHAFT	
DRAIN AND REFILL	27-07	Disassembly and Assembly	27-15
EXTENSION HOUSING REAR SEAL		SHIFT POINT CHECKS	27-03
Removal and Installation	27-07	SPECIFICATIONS	27-25
FLUID LEVEL CHECK	27-03	STALL TEST	27-03
FORWARD CLUTCH AND		THROTTLE LINKAGE	
TURBINE SHAFT		Adjustment	27-04
Disassembly and Assembly	27-16	TRANSMISSION (COMPLETE)	
FOURTH CLUTCH		Disassembly and Assembly	27-08
Disassembly and Assembly	27-17	Removal and Installation	27-05
GOVERNOR		VACUUM MODULATOR	
Removal and Installation	27-07	Checking	27-03
NEUTRAL START SWITCH		Removal and Installation	27-07
Adjustment	27-04		

DESCRIPTION

TRANSMISSION

The AT-540 transmission is hydraulically operated with four forward ranges and one reverse range. Figure 1 shows the location of the converter, gear train and most of the internal parts used in the transmission.

The transmission consists basically of a hydraulic torque converter, a planetary gear train and a hydraulic control system which automatically changes gear ratios and supplies oil under pressure to the converter and to the lubrication circuits (Fig. 2).

The torque converter multiples engine torque and acts as a fluid coupling between the engine and transmission gearing while starting and during the automatic gear shifts.

The transmission gearing consists of three sets of constant mesh planetary gears that are operated by hydraulically actuated disk-type clutches which provide smooth, full-power shifting.

The clutches are oil cooled and self-adjusting— automatic compensation for wear. The gear train includes First, Second, Third, and Fourth clutches with a forward clutch applied in all forward ranges.

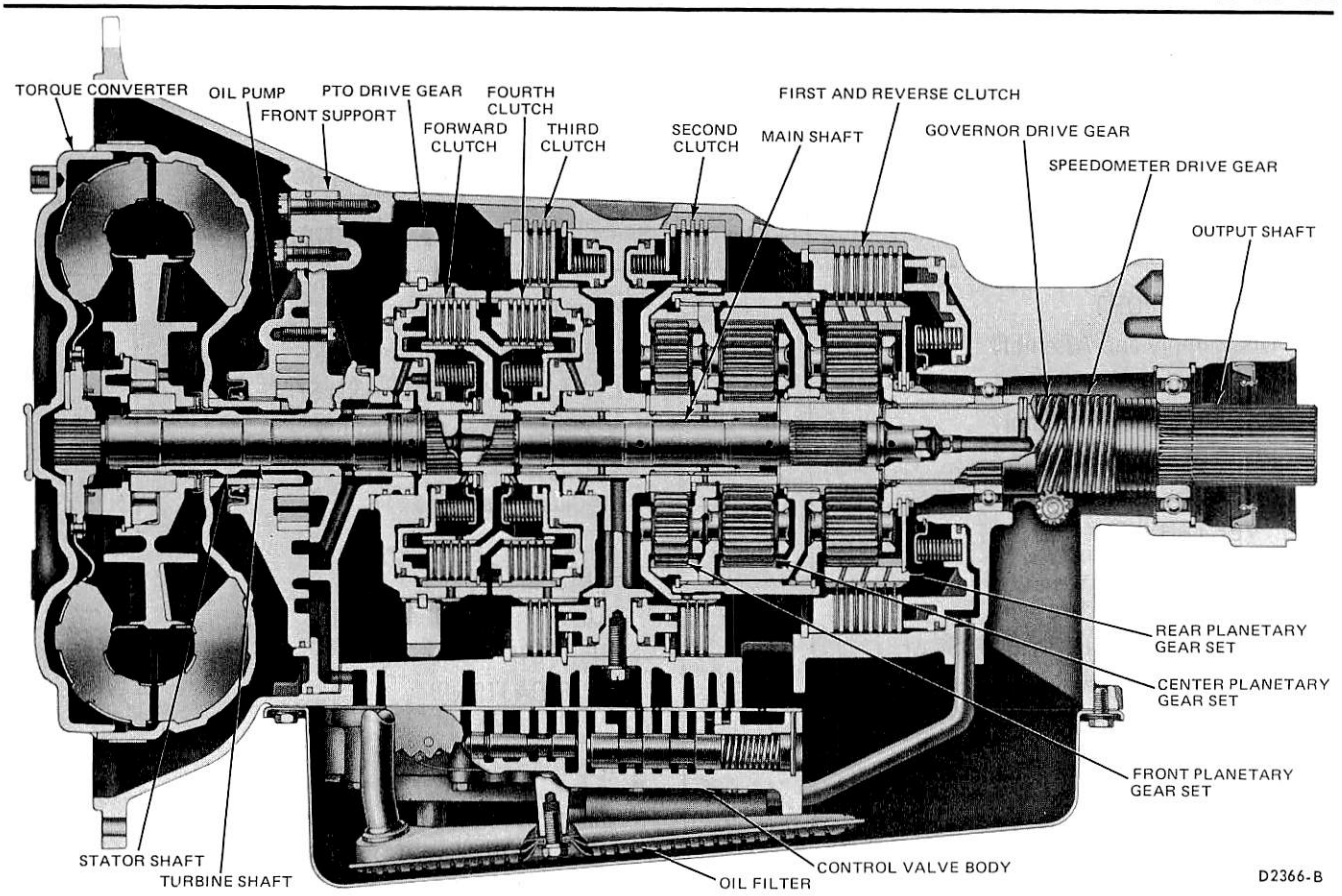

FIG. 1 Transmission Gear Train

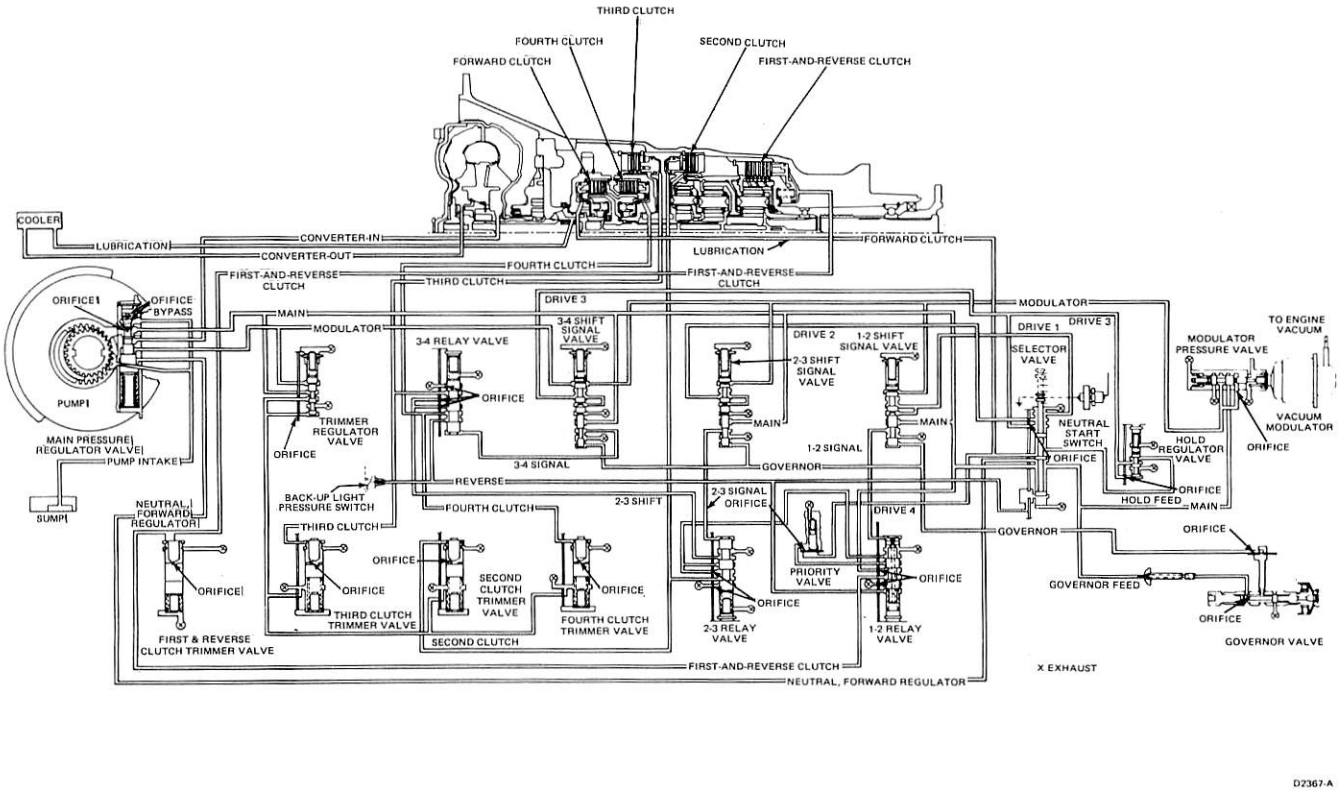

FIG. 2 Hydraulic Control System

TESTING

When diagnosing transmission problems, refer to the Truck Diagnosis Manual for the detailed information on the items that could be causing the problem.

TRANSMISSION FLUID LEVEL CHECK

1. With the vehicle standing level, apply the parking brake, and place the range selector lever in N. Operate the engine at idle speed.
2. If the transmission fluid is cold, operate the transmission until normal operating temperature (150 degrees to 200 degrees F) is reached.
3. When the engine and transmission have reached their normal operating temperatures, move the selector lever through all the range positions to make sure that warm fluid is distributed throughout the transmission. Return the selector lever to N.
4. Clean around the end of the fill pipe before removing the dipstick.
5. Check fluid level on dipstick. The safe operating level is between the ADD and FULL marks on the dipstick. If fluid level is low, add sufficient fluid to bring level to the FULL mark. If level is too high, drain excess fluid to proper level.

STALL TEST

A stall test should be conducted when the power package (engine and transmission) is not performing satisfactorily. The purpose of the test is to determine if the transmission is the malfunctioning component.

Start the engine to allow it to reach its normal temperature. Apply both the parking and service brakes and, if necessary, block the vehicle to prevent any forward or reverse movement.

The stall test is made in gear at full throttle to check engine performance, converter and the holding ability of the clutches. **While making this test, do not maintain the stalled condition longer than 30 seconds due to rapid heating of the transmission oil. With the transmission in neutral, run the engine at 1200 to 1500 rpm for two minutes to cool the oil between tests. Do not allow the converter-out temperature to exceed 300 degrees F. Keep close check to prevent the engine cooling system from overheating.**

With the transmission in gear and the engine at full throttle, note the maximum speed the engine will attain. Then compare the speed with the limits shown in the Specification Section. An engine speed above or below the specified range may indicate a malfunction in the engine or transmission.

SHIFT POINT CHECKS

The Specification Booklet outlines the engine speeds at which the various shifts should occur.

SELECTOR LEVER LINKAGE CHECK

Proper adjustment of the manual selector lever linkage is important because the shift tower gate positions must correspond exactly to the detents in the transmission. Periodic checks should be made for bent or worn parts, loose bolts and threaded connections and an accumulation of grease and dirt. All moving joints must be kept clean and well lubricated.

The selector lever should move easily and give a feel of positive engagement in each position. The pin which engages the shift lever linkage at the transmission should move freely in each range.

VACUUM MODULATOR CHECK

To check for a vacuum diaphragm leak, insert a pipe cleaner into the vacuum connector pipe as far as possible and check for the presence of transmission fluid. If fluid is found replace the modulator. Gasoline or water vapor may settle in the vacuum side of the modulator. If this is found without the presence of fluid, the modulator need not be changed.

To check the modulator for an atmospheric leak, apply a liberal coating of soap bubble solution to the vacuum connector pipe seam, crimped upper-to-lower housing seam and threaded screw seal. Using a short piece of rubber tubing, apply air pressure to the vacuum pipe by blowing into the tube and observe for leak bubbles. If bubbles appear, replace the modulator. **Do not use more than 6 psi air pressure, as pressure over 6 psi may damage the modulator.**

TORQUE CONVERTER TESTS

Because the torque converter assembly is closed and welded after assembly of the internal parts, no repairs can be made. The assembly can be tested, however, to determine its condition in two areas. End play of the internal elements can be measured, and the outer shell can be tested for leaks.

CONVERTER END PLAY CHECK

1. Clear the torque converter of oil. Examine the oil for evidence of foreign matter or metal, indicating internal damage.
2. Insert the converter end play checking tool (Fig. 3) into the converter hub until it bottoms.
3. Attach a dial indicator to the tool (Fig. 3). Expand the split bushing in the turbine spline by tightening the adjusting nut. Tighten the adjusting nut until the tool is securely locked into the spline.
4. Position the indicator button on the converter hub and set the dial face at 0 (zero).
5. Lift the tool upward as far as it will go and note the indicator reading. If the end play exceeds 0.050 inch, the torque converter assembly should be replaced.

CONVERTER LEAKAGE CHECK

1. Clear the torque converter of oil. Examine the oil for foreign matter or metal, indicating internal damage.
2. Place the torque converter leak test tool on the converter hub (Fig. 4) and hand tighten the knurled portion of the tool to hold it securely in place.
3. Pressurize the converter to a maximum of 75 psi. Submerge the pressurized assembly in water and observe closely for bubbles that indicate leakage. If the assembly leaks, it should be replaced.
4. Release the air from the torque converter by pushing on the valve

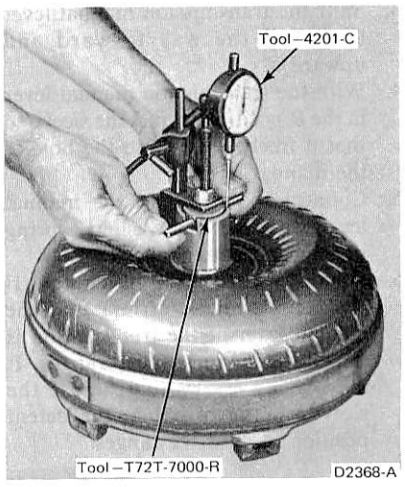

FIG. 3 Checking Converter End Play

stem in the air fitting on the tool. **Be sure that all pressure is completely exhausted from the converter before removing the tool.**

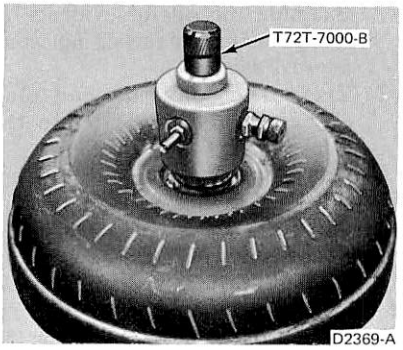

FIG. 4 Converter Leak Checking Tool

ADJUSTMENTS

NEUTRAL START SWITCH

Check the starter circuit at all selector lever positions. The circuit must be open at all positions except N (neutral). To adjust, loosen the neutral switch to bracket attaching screws (Fig. 5). Position the switch so that the starter circuit is closed when the selector lever is at N.

SELECTOR LEVER LINKAGE

1. With the engine stopped, position the transmission selector lever in the R position.
2. Disconnect the shift cable sleeve at the transmission manual lever (Fig. 6).
3. Shift the transmission manual lever to R (all the way forward and upward).
4. With the transmission manual lever in the R position, adjust the sleeve so that it freely enters into the hole of the manual lever.
5. Connect the sleeve to the manual lever with the flat washers, spring washer and cotter pin.
6. Operate the shift lever in all positions to make certain that the manual lever at the transmission is in full detent in all gear ranges. It may be necessary to readjust the sleeve slightly to obtain the detent position in all drive ranges.

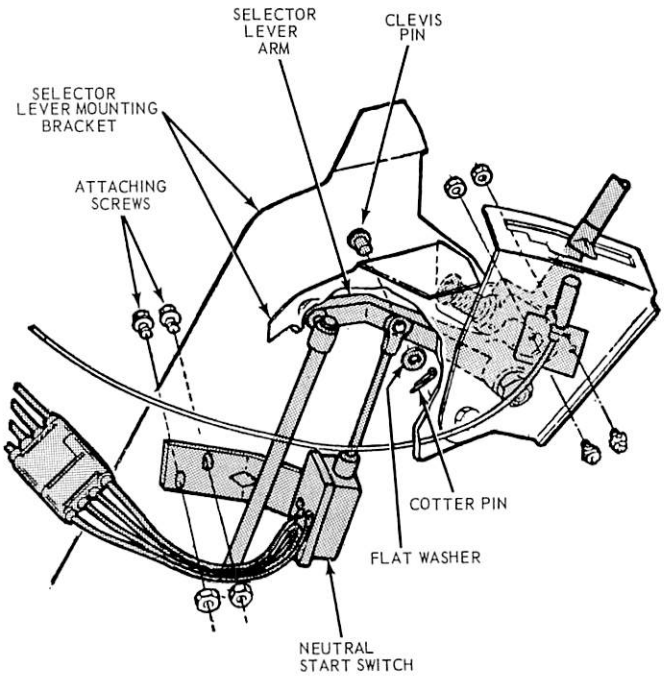

FIG. 5 Neutral Start Switch

THROTTLE LINKAGE ADJUSTMENTS

The throttle linkage should be adjusted whenever the engine idle speed is changed, and whenever the transmission operation indicates that adjustment is required. Refer to Group 24 for the detailed throttle linkage adjustment procedures.

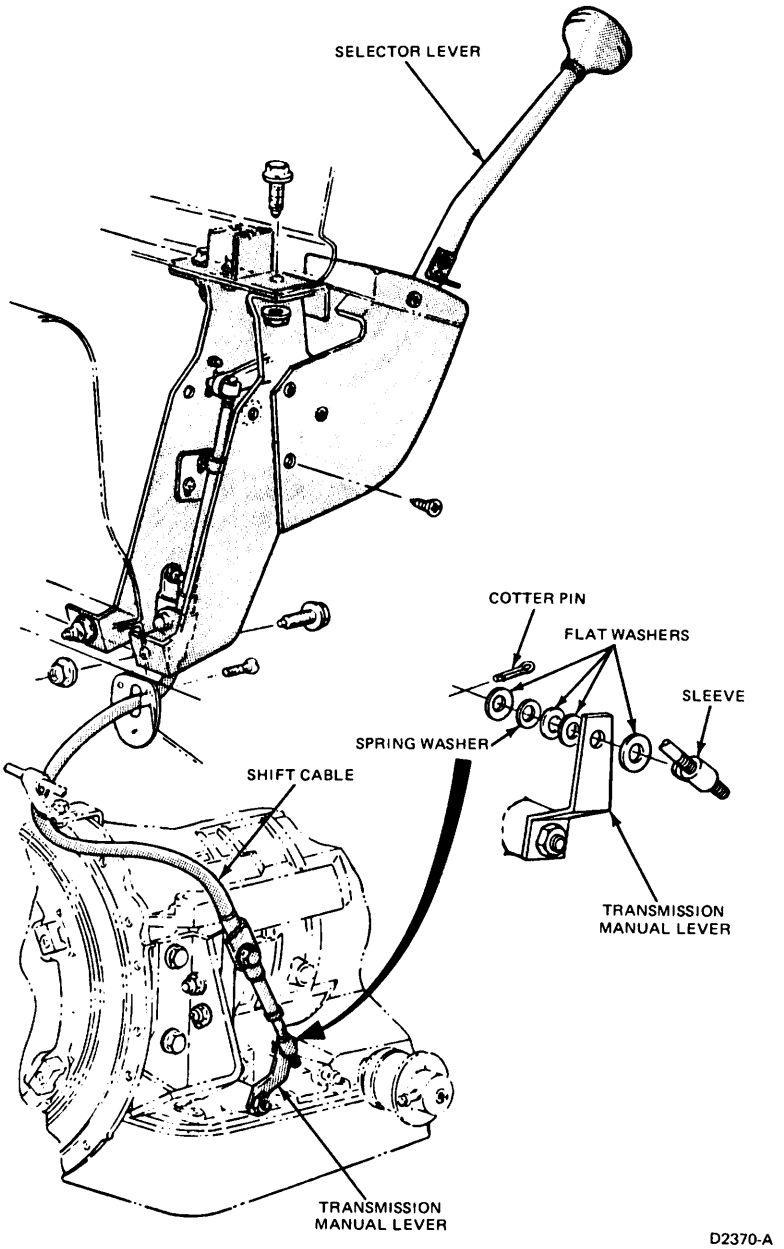

FIG. 6 Selector Lever Linkage—Typical

REMOVAL AND INSTALLATION

TRANSMISSION

Removal

1. From inside the vehicle, remove the right and left door sill scuff plate screws and remove the plates. Position the floor covering out of the way. Remove the bolts securing the transmission access cover to the floor pan and remove the cover.
2. On a one-piece drive shaft, disconnect the shaft from the yoke at the parking brake drum. On a two-piece drive shaft, disconnect the coupling shaft from the yoke at the parking brake drum, and then remove the center support bearing bracket. Move the forward end of the drive shaft out of the way.
3. Disconnect the parking brake linkage and remove the parking brake drum from the output shaft flange.
4. Remove the parking brake handle and brackets from the transmission case.
5. Place a drain pan under the transmission. Disconnect the filler tube from the transmission pan and allow the fluid to drain.
6. Disconnect the speedometer cable from the rear of the transmission.
7. Disconnect the oil cooler lines at the transmission.
8. Disconnect the vacuum line from the vacuum modulator.

9. Remove the vacuum modulator retainer bolt and remove the retainer. Remove the vacuum modulator and valve actuating rod from the case.
10. Disconnect the shift cable from the manual lever at the transmission.
11. Remove the two bolts that secure the shift cable bracket to the transmission and position the cable and bracket out of the way.
12. Remove the inspection cover from the bottom front side of the flywheel housing.
13. Remove the six converter-to-flywheel attaching bolts.
14. Remove four upper and two lower converter housing-to-flywheel attaching bolts.
15. Remove the bolts and nuts securing the two rear engine supports to the crossmember. Remove the lower insulators and flat washers.
16. Loosen the front engine support bolts.
17. Position a transmission jack under the transmission and secure the transmission to the jack with safety chain.
18. Place a jack under the engine, then raise both jacks to take the weight off the crossmember.
19. Remove the two upper engine rear support insulators from the crossmember.
20. Remove the bolts securing the engine rear support brackets to the transmission and remove the brackets.
21. With both jacks supporting the engine and transmission, remove the remaining converter housing-to-flywheel attaching bolts.
22. Pull the transmission rearward until the converter housing contacts the body sheet metal (Fig. 7). Then tilt the rear of the transmission up until the bottom of the converter housing clears the crossmember (Fig. 7). Lower the unit and remove it from under the vehicle. If necessary, raise the rear of the truck to permit the transmission to clear the frame.

Installation

1. Position the torque converter to the transmission, engaging the turbine shaft with the converter turbine, the stator shaft with the stator, and the hub with the oil pump drive gear.
2. With the converter properly installed, place the transmission on the jack. Secure the transmission to the jack with safety chain.
3. Raise the converter and transmission on the jack, then move the assembly into position over the crossmember (Fig. 7). Align the holes in the converter with the holes in the flywheel.
4. Install six converter housing-to-flywheel attaching bolts (three on each side). Torque the bolts to specification.
5. Lower the engine jack and remove it from under the vehicle.
6. Position the engine rear support brackets to the sides of the transmission and secure with the attaching bolts.
7. Position the two upper engine rear support insulators on the crossmember. Position the lower insulators and flat washers to the crossmember and install the rear support-to-crossmember bolts and nuts. Torque the bolts to specification.
8. Lower the transmission jack and remove it from under the vehicle.
9. Install the four upper and two lower converter housing-to-flywheel attaching bolts.
10. Torque the front engine support bolts to specification.
11. Install the six converter-to-flywheel attaching bolts. Torque the bolts to specification.
12. Install the inspection cover on the bottom front side of the flywheel housing.
13. Position the shift cable bracket to the transmission and install the attaching bolts.
14. Connect the shift cable to the manual lever at the transmission.
15. Install the vacuum modulator actuating rod and vacuum modulator into the case. Install the vacuum modulator retainer and secure with the attaching bolt. Torque the bolt to specifications.
16. Connect the vacuum line to the vacuum modulator.
17. Connect the oil cooler lines to the transmission case.
18. Connect the speedometer cable.
19. Connect the fluid filler tube to the oil pan.
20. Position the parking brake handle and brackets to the transmission case and secure with the attaching bolts.
21. Install the parking brake drum.
22. Connect the parking brake linkage.
23. Install the drive shaft, the center support bearing bracket and the coupling shaft. Connect the coupling shaft to the parking brake drum. Torque all bolts and nuts to specification.
24. Position the transmission access covers to the floor pan and secure with the attaching bolts. Reposition the floor covering. Install the door sill scuff plates and secure with the attaching screws.
25. Add enough automatic transmission fluid to the converter and transmission to bring the fluid level to the full mark on the dipstick.
26. Check the transmission, converter assembly and oil cooler lines for leaks.

CONTROL VALVE BODY

Removal

1. Place a drain pan under the transmission. Disconnect the filler tube from the transmission pan and allow the fluid to drain.
2. Remove the bolts and nuts securing the two rear engine supports to the crossmember. Remove the lower insulators and flat washers.
3. Place a jack under the transmission, then raise the transmission to take the weight off the crossmember.
4. Remove the oil pan and gasket.
5. Remove the oil filter retaining screw and remove the filter.
6. Remove the oil intake pipe (Fig. 11).
7. Remove the detent spring retaining bolt and remove the spring.
8. Remove the 18 control valve body attaching bolts and remove the valve body and the three attached tubes

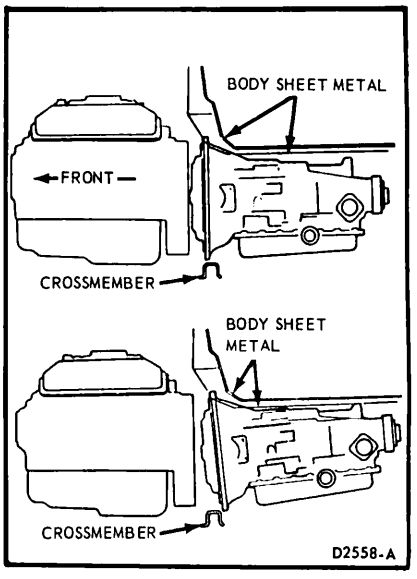

FIG. 7 Removing or Installing Automatic Transmission

from the case. **Be careful not to drop the selector valve out of the valve body.**

Installation

1. Install the governor feed tube, pressure tube and the first-reverse clutch tube in the valve body.
2. Install the control valve body by aligning the three tubes with the holes in the case. Install the valve body attaching bolts and tighten them evenly to 8-12 ft-lbs torque. Be sure the long 1/2-20 x 2 3/4 inch bolt is installed near the center of the valve body (Fig. 11).
3. Position the detent spring on the valve body, making sure the spring roller is centered on the selector lever. Install and tighten the attaching bolt to specification.
4. Install a new seal ring on the end of the intake pipe and install the pipe.
5. Position the oil filter on the intake pipe and install the attaching screw. Torque the screw to specification.
6. Place a new oil pan gasket on the transmission case and install the pan. Install the attaching screws and torque the screws evenly to specification.
7. Lower the transmission jack and remove it from under the vehicle.
8. Position the lower insulators and flat washers to the crossmember and install the rear support-to-crossmember bolts and nuts. Torque the bolts to specification.
9. Secure the fluid filler tube to the pan. Fill the transmission to the proper level with the specified fluid.

TRANSMISSION DRAIN AND REFILL

1. If the fluid is cold, operate the transmission until a normal operating temperature is reached.
2. Disconnect the filler tube from the transmission pan and allow the fluid to drain.
3. When the fluid has stopped draining, reconnect the filler tube and tighten the fitting securely.
4. Remove the dipstick and pour approximately ten quarts of transmission fluid into the transmission through the filler tube.
5. With the vehicle standing level, apply the parking brake and place the selector lever in N. Operate the engine at idle speed.
6. If the transmission fluid is cold, operate the transmission until normal operating temperatures (150 degrees to 200 degrees F) is reached.
7. When the engine and transmission have reached their normal operating temperatures, shift the selector lever through all the range positions to make sure that warm fluid is distributed throughout the transmission. Return the selector lever to N.
8. Check the fluid level on the dipstick. The safe operating level is between the ADD and FULL marks on the dipstick. If fluid level is low, add sufficient fluid to bring level to the FULL mark. If level is too high, drain excess fluid to proper level.

VACUUM MODULATOR

Removal

1. Disconnect the vacuum line from the vacuum modulator.
2. Remove the vacuum modulator retainer bolt and remove the retainer.
3. Remove the vacuum modulator and valve actuating rod from the case. Remove the seal ring from the modulator (Fig. 8).

Installation

1. Install the vacuum modulator actuating rod (Fig. 8) into the case. Be sure larger diameter is inserted first.
2. Install a new seal ring on the vacuum modulator. Lubricate the seal ring with oil-soluble grease and install the modulator into the case.
3. Rotate the modulator until the vacuum hose connector pipe faces directly forward. Then, install the retainer, with the bent tabs against the transmission, and secure with the attaching bolt. Torque the bolt to specification.
4. Connect the vacuum line to the vacuum modulator.

GOVERNOR

Removal

1. Remove the four governor cover-to-case attaching bolts (Fig. 8).
2. Remove the cover, cover gasket and governor from the case. Rotate the governor clockwise to disengage the drive gears.

Installation

1. Insert the governor assembly in the case.
2. Place a new gasket on the governor cover and install the cover (Fig. 8). Install and torque the cover attaching bolts to specification.

EXTENSION HOUSING REAR SEAL

Removal

1. On a one-piece drive shaft, disconnect the shaft from the yoke at the parking brake drum. On a two-piece drive shaft, disconnect the coupling shaft from the yoke at the parking brake drum, and then remove the center support bearing bracket. Move the forward end of the drive shaft out of the way.
2. Disconnect the parking brake linkage.
3. Remove the bolts securing the parking brake drum to the extension housing and remove the drum.
4. Remove the seal as shown in Figure 9.

Installation

1. Install a new extension housing seal using the tool shown in Figure 10.
2. Position the parking brake drum to the extension housing and install the attaching bolts. Torque the bolts to specification.

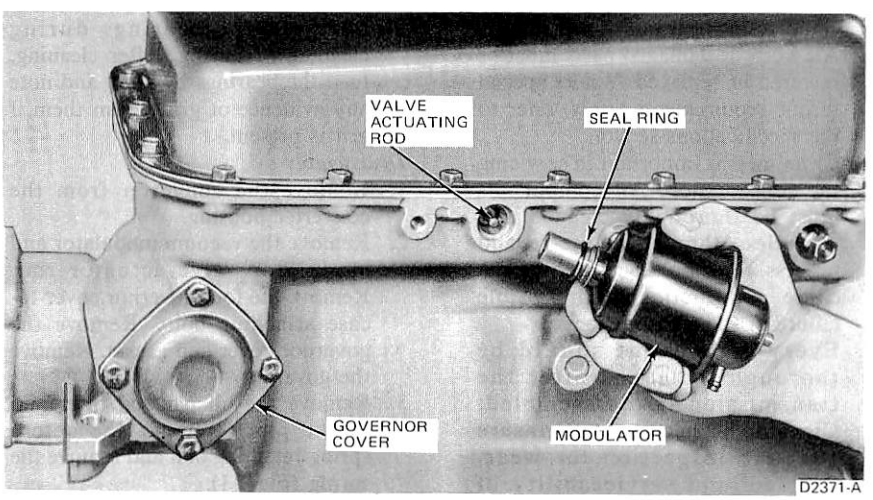

FIG. 8 Removing or Installing Vacuum Modulator

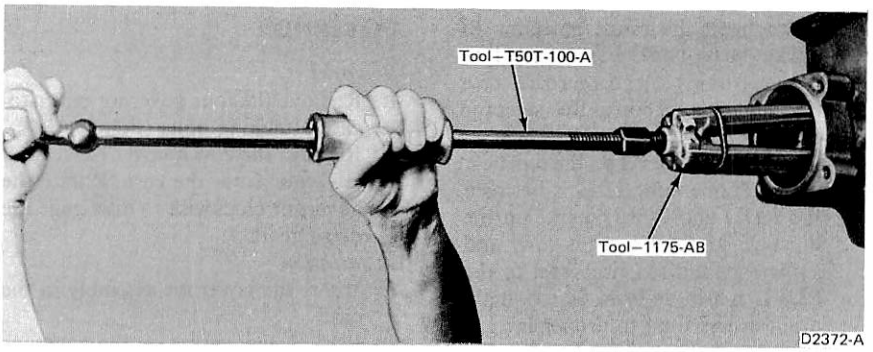

FIG. 9 Removing Extension Housing Seal

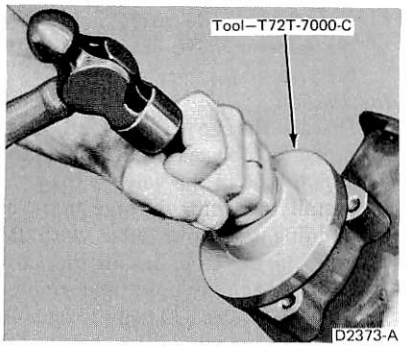

FIG. 10 Installing Extention Housing Seal

3. Connect the parking brake linkage.
4. Connect the drive shaft or the coupling shaft and center support bearing bracket. Torque the nuts and/or bolts to specification.

DISASSEMBLY AND ASSEMBLY

TRANSMISSION

1. Proper equipment must be available before disassembly is started. This equipment includes a suitable hoist of at least 1/4-ton capacity, proper hand tools and special tools, and a press.
2. Gaskets, lock wires, lock strips, and cotter pins should be discarded as they are removed. New parts of this type should always be installed.
3. Care must be used to avoid damage to transmission components during disassembly, cleaning, inspection, repair, and assembly operations. Nicks, and scratches caused by careless handling may cause fluid leakage or improper functioning and could result in transmission failure. All worn or damaged parts must be repaired or replaced. Where special torque requirements apply, refer to the specifications section.
4. Cleanliness is important in servicing the transmission. All components must be thoroughly cleaned and kept clean throughout the rebuild process. The presence of dirt can cause malfunction, and possible failure of the transmission.
5. Every component should be thoroughly cleaned after the transmission is disassembled. Cleaning is necessary to insure effective inspection for wear, damage, and serviceability of components.
6. Crocus cloth may be used to remove minor surface irregularities.
7. A soft wire (brass or copper) may be used to clean fluid passages. Always flush such passages thoroughly after cleaning.
8. If steam cleaning is used, dry the cleaned parts immediately with compressed air and apply a film of oil to prevent rusting. Never use lye or caustics which will corrode or etch metal surfaces.
9. Do not clean the lubricant from new bearings. Keep new bearings wrapped until they are to be installed. Soak bearings which have been in service, in dry cleaning solvent or mineral spirits paint thinner to loosen deposits of dirt. Do not spin the bearings during cleaning or drying. After cleaning, turn the bearings by hand and note any evidence of grit. Clean them if grit is present.

Disassembly

1. Remove the converter from the converter housing.
2. Remove the vacuum modulator and modulator valve actuator rod. Remove the four governor cover-to-case attaching bolts. Remove the governor cover and gasket. Remove the governor.
3. Remove the oil pan, oil filter and intake pipe. Remove the detent spring retaining bolt and remove the spring (Fig. 11).
4. Remove 18 control valve body attaching bolts. Lift the valve body and the three attached oil tubes from the transmission case (Fig. 11). **Be careful not to drop the selector valve out of the valve body.**
5. Remove the three oil tubes from the valve body. Remove the oil screen from the valve body, at the governor feed tube bore.
6. Using a magnet, remove the steel governor check valve ball from the channel in the transmission case (Fig. 12). Remove the center support anchor bolt and flat washer.
7. Remove nine bolts and lockwashers from the front support and two bolts and seals from opposite holes in the oil pump body. Use the tools shown in Fig. 13 to loosen the pump, then lift it out of the case.
8. Remove the two hook-type seal rings and thrust washer from the hub of the front support (Fig. 14).
9. Remove the front support gasket (Fig. 15). Lift the forward clutch and turbine shaft assembly out of the case. Remove the nylon thrust washer from the rear of the assembly.
10. Grasp the fourth clutch spring retainer and lift the clutch assembly out of the case (Fig. 16).
11. Remove the sun gear shaft (Fig. 17).
12. Remove the snap ring from the third-clutch back plate, using the tool shown in Figure 18, and remove the back plate. Remove the clutch plates (Fig. 17).

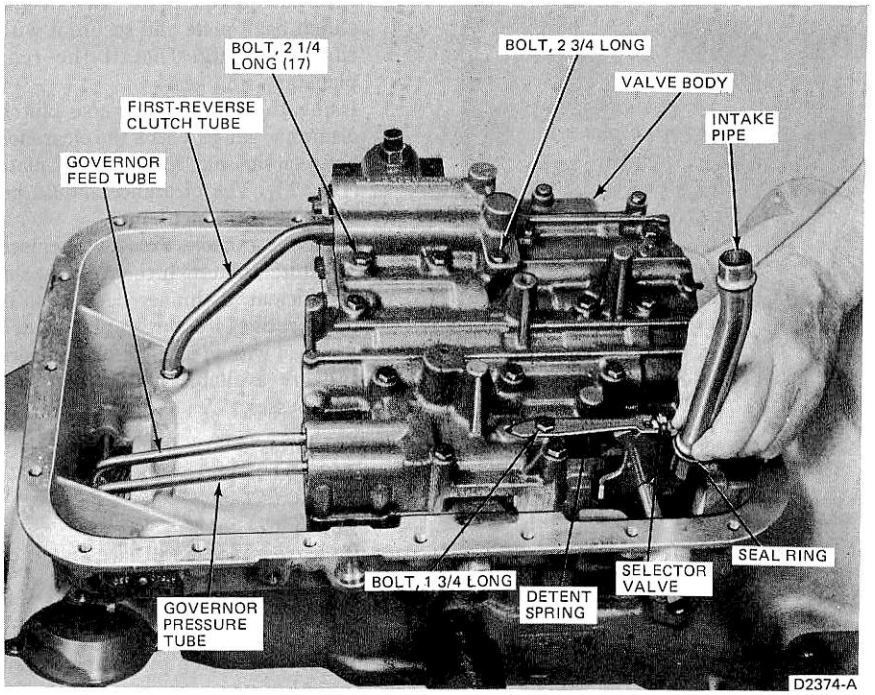

FIG. 11 Removing or Installing Oil Intake Pipe

13. Remove the center support snap ring using Tool T72T-7000-JJ. Remove the two hook-type seal rings from the center support hub. Install the center support lifting tool on the hub and carefully lift the support out of the case (Fig. 19).
14. Remove the thrust washer from the front of the planetary sun gear.
15. Remove the planetary gears and shaft as a unit. **If necessary, tap the end of the output shaft with a soft-faced hammer to loosen the assembly.**
16. Remove the governor and speedometer drive gears and spacer if they did not come out with the planetary gears and shafts assembly.
17. Using Tool T72T-7000-JJ, remove the snap ring securing the second-clutch in the transmission case. Remove the clutch plates and back plate.
18. Using Tool T72T-7000-JJ, remove the first and reverse clutch back plate snap ring and remove the back plate. Remove the rear planetary ring gear and clutch plates.
19. Compress the first and reverse clutch springs with the tool shown in Figure 20. Remove the snap ring. Remove the tool, spring retainer, piston return springs and piston. As the tool is released, guide the retainer spring to clear the snap ring groove. Remove the two lip-type seals from the piston grooves.
20. Remove the output shaft seal using the tools shown in Figure 9.
21. Remove the rear bearing snap ring and remove the bearing with the tools shown in Figure 21.

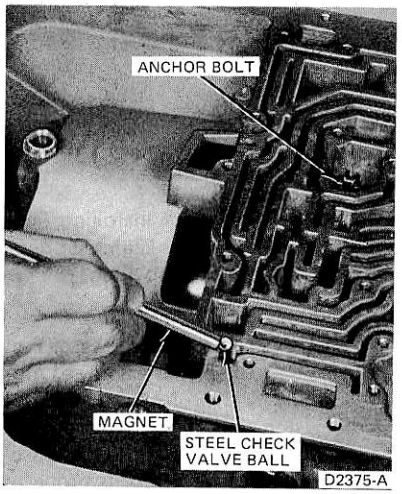

FIG. 12 Removing or Installing Governor Check Valve Ball

Assembly

1. Lubricate and install new inner and outer seal rings in the first and reverse clutch piston grooves. Position the inner seal protector

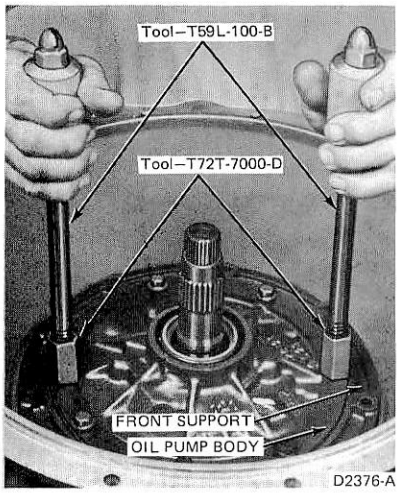

FIG. 13 Removing or Installing Oil Pump Assembly

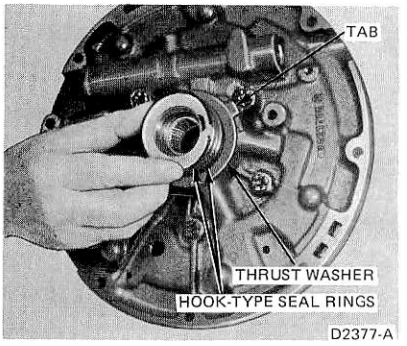

FIG. 14 Removing or Installing Front Support Seal Rings and Thrust Washer

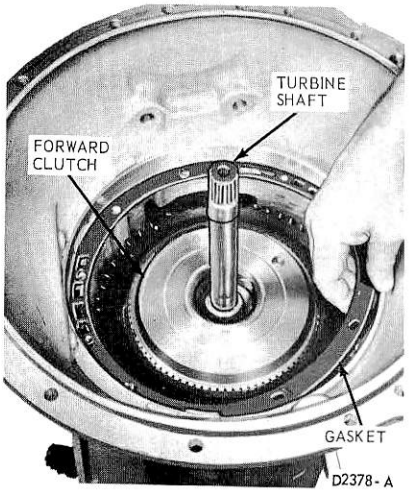

FIG. 15 Removing or Installing Front Support Gasket

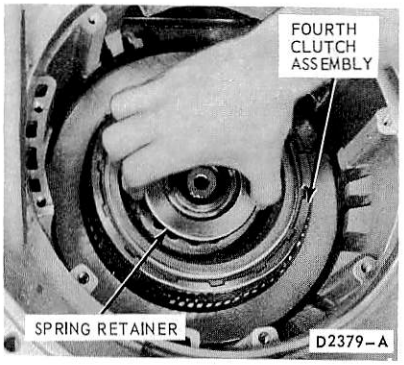

FIG. 16 Removing or Installing Fourth-Clutch Assembly

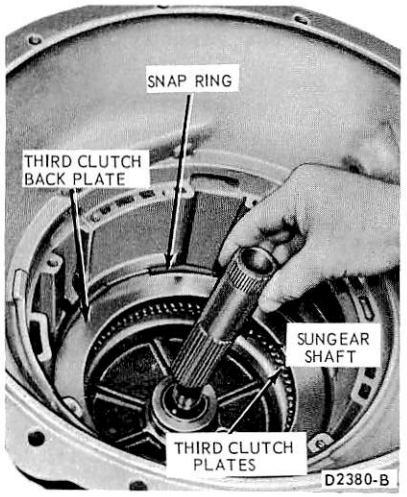

FIG. 17 Removing Sun Gear Shaft

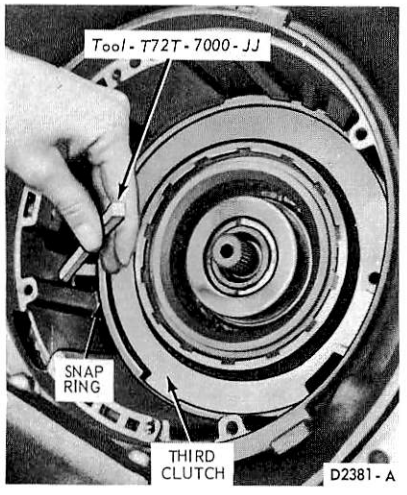

FIG. 18 Removing Third-Clutch Snap Ring

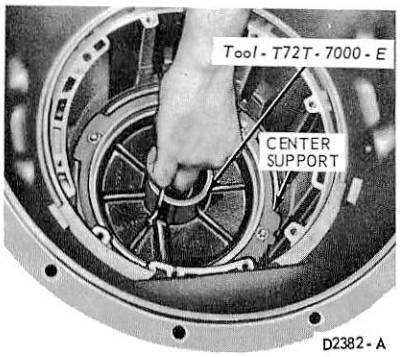

FIG. 19 Removing Center Support

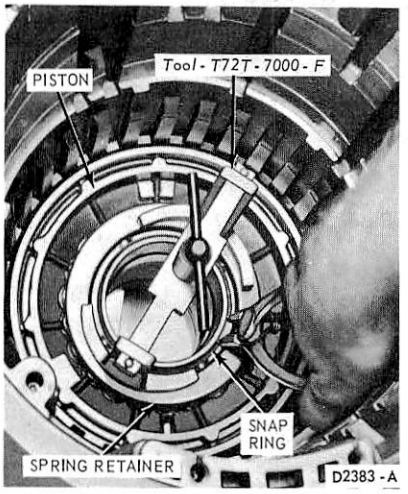

FIG. 20 Removing or Installing First and Reserve Clutch Spring Retainer Snap Ring

over the center hub in the case (Fig. 22). Insert the piston backward into the outer seal protector, then hold the piston and large seal protector and insert as a unit into the case. When the seal protector is properly seated, push the piston into place making sure the tang on the piston is seated in the slot in the case.

2. Position the piston return springs in the piston recesses. Check to be sure the springs are properly aligned and place the spring retainer on the springs. Place the snap ring on the spring retainer.
3. Install the spring compressor tool (Fig. 20) and compress the springs until the spring retainer clears the snap ring groove. Install the snap ring and remove the tool.
4. Install the first and reverse clutch plates alternately starting with an external-tanged plate. Install the clutch back plate and secure it with the snap ring. Install the rear planetary ring gear.
5. Using the first and reverse clutch clearance gauge, check the clearance between the snap ring and back plate (Fig. 23). The clearance should be 0.0405-0.1005 inch.
6. If the clearance is excessive, replace the clutch plates. If the clearance is insufficient, a thinner back plate is required. The back plates are stamped with identification numbers and are available in the following thicknesses:

Thickness	Identification No.
0.683-0.693 inch	1
0.647-0.657 inch	2
0.611-0.621 inch	3

If the clearance is still excessive after new clutch plates have been installed, a thicker back plate is required.

7. Align the internal splines of the first and reverse clutch plates and install the planetary gears and shafts assembly into the transmission case. **Be sure the rear planetary ring gear splines engage all of the internal splined plates of the clutch.**
8. Install the second clutch back plate in the transmission case, then install the clutch plates alternately starting with an internal splined plate (Fig. 24). Install the snap ring.
9. Before installing the center support in the transmission case, remove the third clutch piston from the assembly.
10. Using the center support lifting tool, lower the center support into the transmission case (Fig. 19). Be sure the tapped hole in the support is aligned with the bolt hole in the bottom of the case. Remove the tool.
11. Install the flat washer and center support anchor bolt (Fig. 12). **Do not tighten the bolt at this time.**
12. Install the center support compressor tool as shown in Figure 25. Use two of the oil pump retaining bolts to secure the tool.
13. Tighten the compressor tool bolt to 8-10 ft-lbs torque.
14. Using the snap ring selection gauge, check the snap ring groove clearance (Fig. 25). The gauge has four lugs of different color and thicknesses. Try all four lugs into the groove. The thickest lug which will enter the groove indicates the color code of the snap ring required. Selective snap rings are available as follows: Thickness

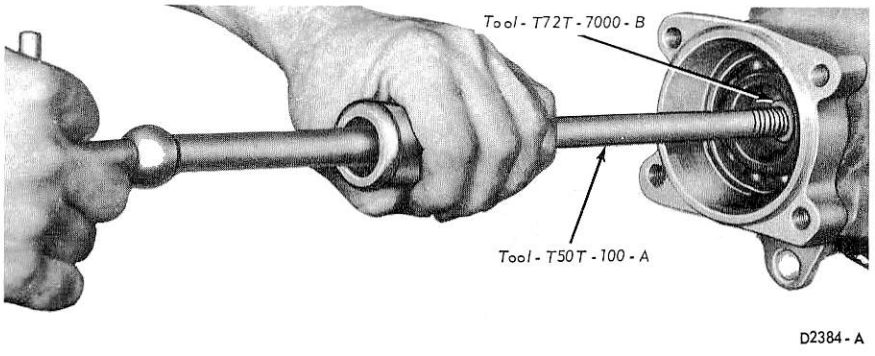

FIG. 21 Removing Output Shaft Rear Bearing

Gauge and Snap Ring Color Code

0.150-0.154	Blue
0.154-0.157	Yellow
0.157-0.160	Green
0.160-0.164	Red

After selecting the correct snap ring, remove the tool.

15. Install the third clutch piston in the center support assembly and secure it with the snap ring selected above.
16. Install the sun gear shaft. Be sure the long splined end is installed toward the rear of the transmission.
17. Install the sun gear shaft retainer tool on the transmission mainshaft (Fig. 26).
18. Position the transmission with the output shaft up.
19. Install the governor and speedometer drive gears on the output shaft. Using a soft drift, tap against the speedometer drive gear to seat both the governor and speedometer gears in the case.
20. Position the spacer selection gauge tool firmly against the output shaft and speedometer drive gear (Fig. 27). Loosen the thumbscrew and push the sliding member against the rear bearing snap ring groove. Tighten the thumbscrew. Be sure the two pins protruding from the back face of the tool are aligned in a single spline of the output shaft to keep the tool straight for an accurate measurement.
21. Remove the gauge, and using a depth micrometer, measure the distance as shown in Figure 27. This dimension will determine which selective spacer to use. The spacers are serviced as follows:

Micrometer Dimension	Identification
1.0003-1.0138	1 Groove
1.0138-1.0273	2 Grooves

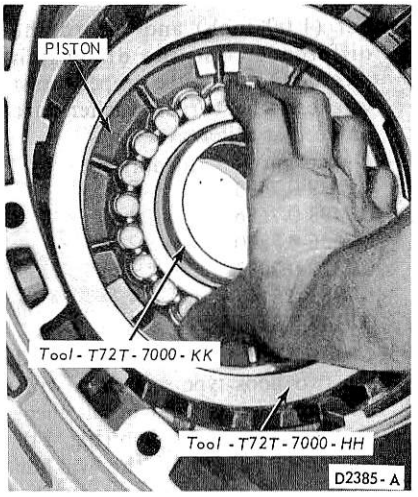

FIG. 22 Installing First and Reverse Clutch Piston

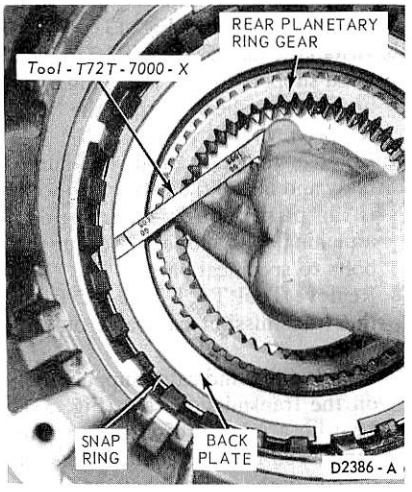

FIG. 23 Checking First and Reverse Clutch Clearance

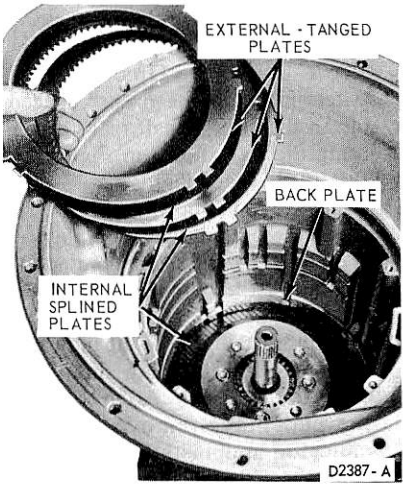

FIG. 24 Installing Second Clutch Plates

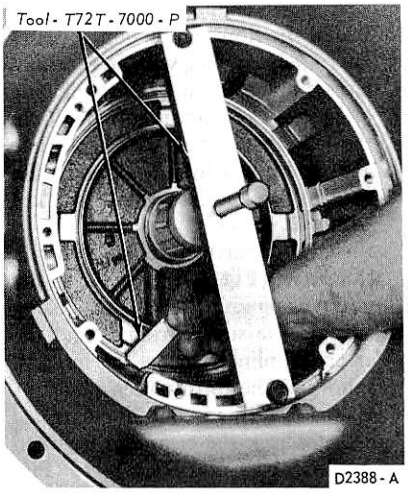

FIG. 25 Check Snap Ring Groove Clearance

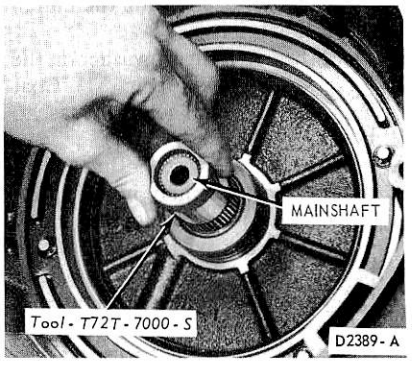

FIG. 26 Installing Sun Gear Shaft Retainer Tool

1.0273-1.0408	3 Grooves
1.0408-1.0543	4 Grooves
1.0543-1.0678	5 Grooves
1.0678-1.0813	6 Grooves

22. After installing the proper spacer, install the output shaft rear bearing using the tool shown in Figure 28. Install the snap ring.
23. Using the tools shown in Figure 29, check the output shaft end play.
24. With the dial indicator contacting the end of the output shaft, set the indicator at zero. Pull the output shaft upward and note the indicator reading. The end play should be 0.003 to 0.042 inch. After checking the end play, remove the dial indicator and install two 1/2-13 bolts through the bore of the tool and into the case. Tighten the bolts to 5-8 ft-lbs torque.
25. Reposition the transmission, mainshaft up, and remove the sun gear shaft retainer tool.
26. Install the third clutch clutch plates alternately starting with an external-tanged plate. Be sure the single tang on the plates engage the single slot in the case. Install the clutch back plate and secure it with the snap ring. **Be sure to use the back plate marked with a 2.**
27. Install the fourth clutch assembly in the case (Fig. 16). Be sure the internal splines of the clutch housing engages the sun gear shaft and the external splines engage the internal splines of the third clutch plates.
28. Using the third clutch clearance gauge, check the clearance between the snap ring and back plate (Fig. 30). The clearance should be 0.029-0.119 inch. If the clearance is excessive, replace the clutch plates. Refer to the wear limit chart in the Specification Section for the clutch plate dimensions.
29. Place the nylon thrust washer on the forward clutch hub (Fig. 31). Coat the washer with oil-soluble grease to hold it in place.
30. Install the forward clutch and turbine shaft assembly in the case.
31. Rotate the forward clutch assembly one or two revolutions, while pushing it downward.
32. Using the tools shown in Figure 32, measure the distance from the top of the gauge bar to the thrust washer surface of the clutch housing. Subtract the thickness of the gauge bar (1.00 inch) and record the difference. Use the dimension recorded to select the proper thrust washer. The thrust washers are serviced as follows:

Dimension	Identification
0.7329-0.7493	0
0.7493-0.7656	1
0.7656-0.7820	2
0.7820-0.7983	3
0.7983-0.8147	4
0.8147-0.8311	5

33. Coat the selected thrust washer and the two hook-type seal rings with oil-soluble grease and install them on the front support hub (Fig. 14). Be sure the tab of the washer engages the cast recess in the support.
34. Install the front support gasket, aligning the bolt holes in the gasket with those in the case (Fig. 15).
35. Install the oil pump assembly with the tools shown in Fig. 13.
36. Install the nine 5/16-18 x 1 3/4 inch front support-to-case attaching bolts and lock washers. Torque the bolts to specification.
37. Remove the tools from the pump body and install the two 5/16-18 x 1 inch pump body-to-support attaching bolts and seals. Torque the bolts to specification.
38. Remove Tool T72T-7000-CC from the transmission case and output shaft.
39. Mount a dial indicator support tool on the transmission case (Fig. 33). Mount a dial indicator on the support so that the contact rests on the end of the turbine shaft. Measure the turbine shaft end play. The desired end play is 0.0053-0.0337

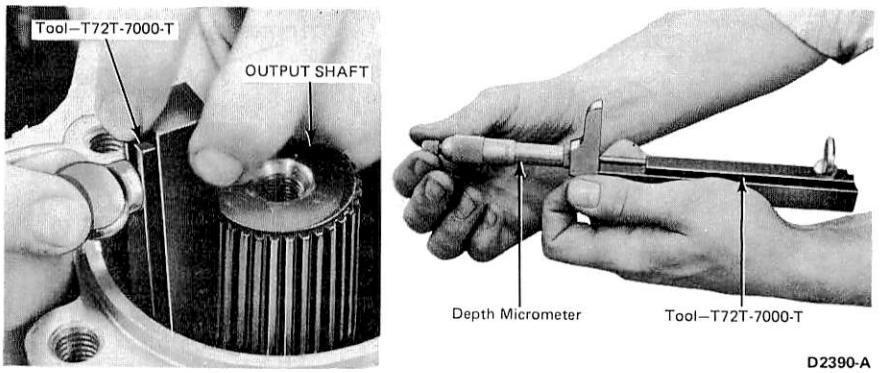

FIG. 27 Rear Bearing Spacer Measurement

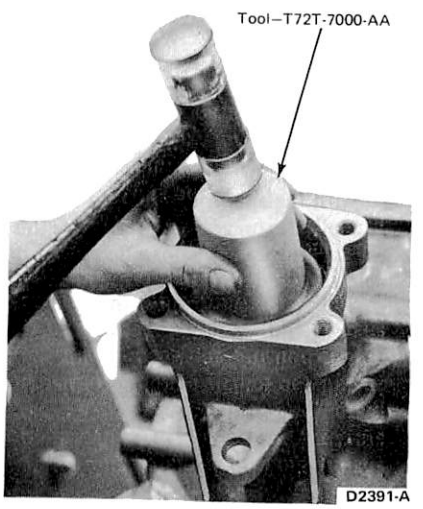

FIG. 28 Installing Rear Bearing

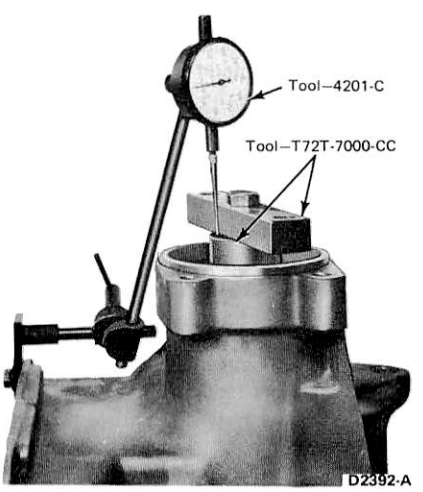

FIG. 29 Checking Output Shaft End Play

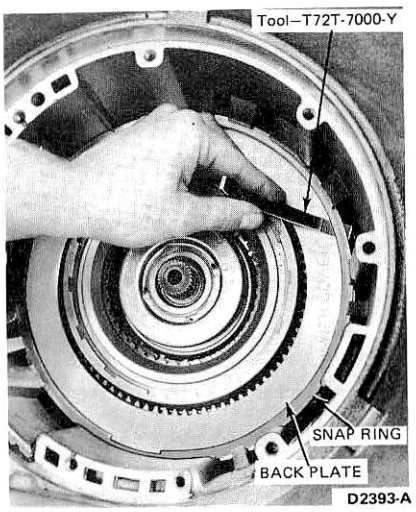

FIG. 30 Checking Third Clutch Clearance

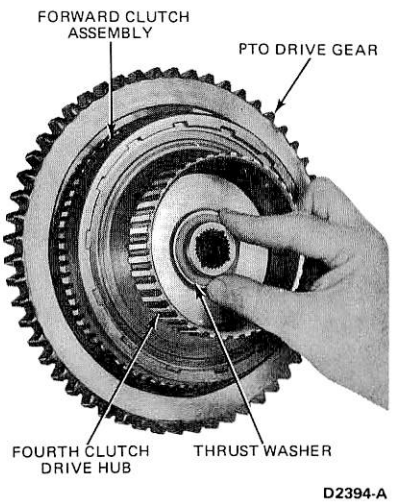

FIG. 31 Installing Forward Clutch Hub Thrust Washer

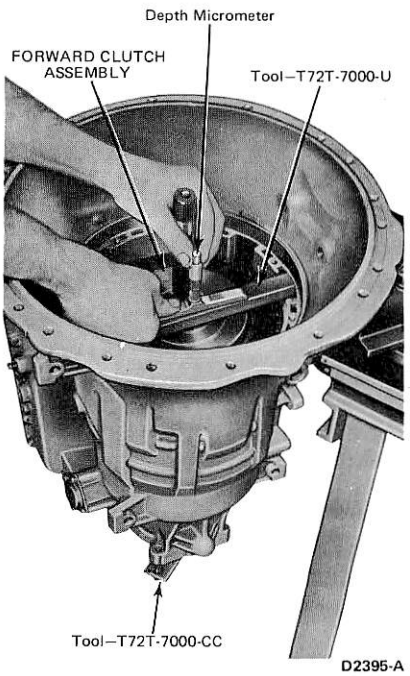

FIG. 32 Front Thrust Washer Measurement

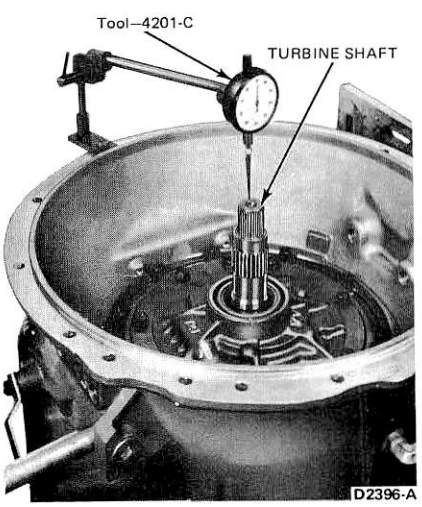

FIG. 33 Measuring Turbine Shaft End Play

inch. Remove the tool.

40. Install the output shaft oil seal (Fig. 10). Refer to Removal and Installation for the installation procedures.
41. Install the steel governor check valve ball into the transmission case (Fig. 12).
42. Tighten the center support anchor bolt (Fig. 12) to 39-46 ft-lbs torque.
43. Position the control valve body in the case. **Be careful not to drop the selector valve out of the valve body.**
44. Install the governor oil screen into the feed tube opening of the valve body. Install the governor feed tube, pressure tube and the first-reverse clutch tube in the valve body.
45. Lift the valve body and install the three tubes into their respective bores in the case (Fig. 11).
46. Position the detent spring on the valve body and install the 1/4-20 x 1 3/4 inch bolt (Fig. 11).
47. Hold the detent spring roller in the center of the selector lever and tighten the bolt to 8-12 ft-lbs torque.
48. Install the remaining control valve body attaching bolts and tighten them evenly to 8-12 ft-lbs torque. Be sure the long 1/4-20 x 2 3/4 inch bolt is installed near the center of the valve body.
49. Install a new seal ring on the end of the intake pipe and install the pipe.
50. Position the oil filter on the intake pipe and install the attaching screw. Torque the screw to specification.
51. Place a new oil pan gasket on the transmission case and install the pan. Install the attaching screws and torque the screws evenly to specification.
52. Insert the governor assembly in the case. Place a new gasket on the governor cover and install the cover. Install the four attaching bolts and torque the bolts to specification.
53. Install the vacuum modulator actuating rod into the case. Be sure the larger diameter is inserted first.
54. Install a new seal ring on the vacuum modulator. Lubricate the seal ring with oil-soluble grease and install the modulator into the case.
55. Rotate the modulator until the vacuum hose connector pipe faces directly forward. Then, install the retainer, with the bent tabs against the transmission, and secure with the attaching bolt. Torque the bolt to specification.
56. Install the converter assembly.
57. Install the transmission in the vehicle.

CONTROL VALVE BODY

Disassembly

1. Remove the manual valve (Fig. 34).
2. Remove the three vacuum modulator valve body bolts and remove the valve body. Remove the spacer plate.
3. Remove the priority valve, spring and valve stop from the control valve body.
4. Before removing the vacuum modulator valve, note the slot in the adjusting ring in which the retaining pin is seated. Then, hold the adjusting ring against the spring pressure and remove the pin. Remove the adjusting ring, valve stop, spring valve, spring and vacuum modulator valve (Fig. 34).
5. Remove the eight bolts from the trimmer cover and remove the cover. **The cover is spring loaded and must be held while the bolts are removed.**
6. Removal of the cover will expose the four trimmer valve stops. Remove these stops from the valve body. Also remove a trimmer spring, plug and valve from each of the trimmer valve bores.
7. Remove the 2-3 and 1-2 relay valve retaining pins from the valve body. **The spring spacers are spring loaded and must be held while the retaining pins are being removed.**
8. Remove the 2-3 relay valve spring

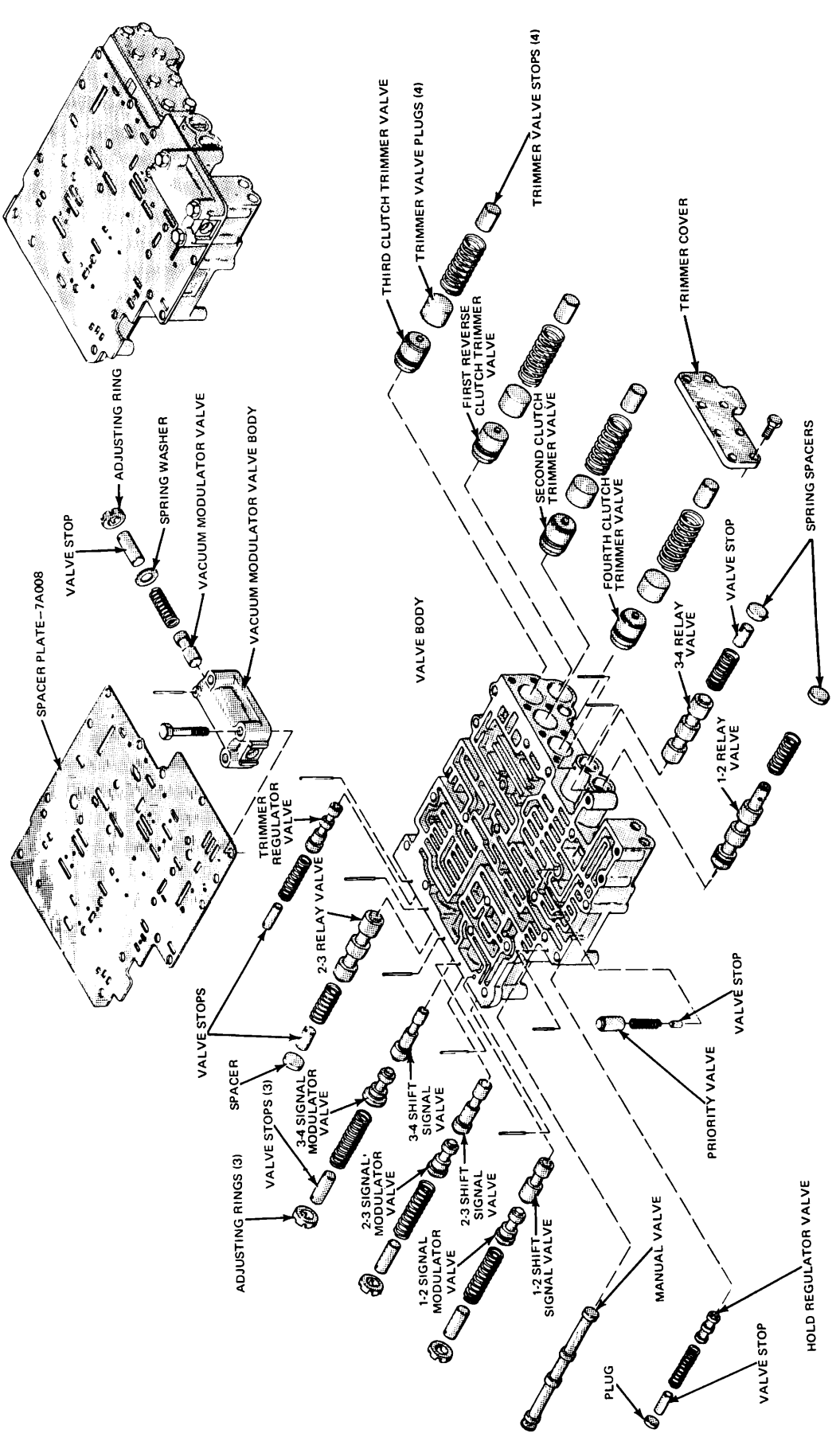

FIG. 34 Control Valve Body Disassembled

spacer, valve stop, spring and valve.
9. Remove the 1-2 relay valve spring spacer, spring and valve.
10. Remove the hold regulator valve retaining pin from the valve body. **The valve plug is spring loaded and must be held while the retaining pin is being removed.**
11. Remove the hold regulator valve plug, valve stop, spring and valve.
12. Remove the 1-2, 2-3 and 3-4 modulator and signal valve retaining pins from the valve body (Fig. 34). **The adjusting rings are spring loaded and must be held while the retaining pins are being removed. Also, note the slots in the adjusting rings in which the pins are seated.**
13. Remove an adjusting ring, valve stop, spring, modulator valve and signal valve from each of the modulator and signal valve bores.
14. Hold the 3-4 relay valve spring spacer against the spring pressure and remove the retaining pin.
15. Remove the 3-4 relay valve spring spacer, valve stop, spring and valve.
16. Hold the trimmer regulator valve stop against the spring pressure and remove the retaining pin.
17. Remove the trimmer regulator valve stop, spring and valve.
18. All the valve body parts should be thoroughly cleaned in cleaning solvent and dried with compressed air. All passages must be completely free of dirt and obstructions. Use a soft bristle brush. **Do not use abrasives or scraping tools.** After cleaning, place the parts on clean paper and cover with paper to keep the dust out.
19. Inspect all the parts closely for wear, breaks, cracks, burrs, and dirt. Burrs may be removed with a soft abrasive stone. **Do not destroy the sharp edges of valves. The valves are designed with sharp edges to prevent them from sticking in their bores.**
20. Inspect all the springs and check them for free length. Correct performance of the transmission depends upon the good condition of springs. **Refer to specifications section for valve body spring identification and specifications.**
21. Before assembly, try all the valves in their bores. When parts are clean and dry, the valves should move in their bores by their weight only. Do not force them into the bores.

Assembly

Check the position of all components, configuration of all valves and plugs and the identification of all springs before installation. Refer to the spring chart in the Specification Section for positive spring identification.

1. Install the trimmer regulator valve, spring and valve stop (Fig. 34). Align the valve stop pin hole with the pin hole in the valve body and install the retaining pin.
2. Install the 3-4 relay valve, spring, valve stop and spring spacer into the valve body. Depress the spring spacer and install the retaining pin.
3. Place the 3-4, 2-3 and 1-2 shift signal valves, modulator valves, springs and valve stops into their respective bores in the valve body. Install the adjusting rings. Align each previously used adjusting ring slot with the pin holes in the valve stop and valve body and install the retaining pins. **When installing adjusting rings, without replacing valve springs, the retaining pins must align with the slots previously used. If a valve spring has been replaced, align the intermediate height slot with the retaining pin. Use the adjusting tool shown in Figure 35 for adjusting the rings.**
4. Place the hold regulator valve, spring, valve stop and plug in the valve body. Depress the plug and install the retaining pin.
5. Place the 1-2 relay valve and spring in the valve body. Install the spring spacer and secure with the retaining pin.
6. Place the 2-3 relay valve, spring and valve stop in the valve body. Install the spring spacer and secure with the retaining pin.
7. Place the trimmer valves, plugs, springs and valve stops into their respective bores in the valve body (Fig. 34). Secure the trimmer cover to the body with the eight attaching bolts. Torque the bolts to specification.
8. Place the vacuum modulator valve, spring, spring washer and valve stop in the vacuum modulator valve body. Install the adjusting ring. If the valve spring was not replaced, align the previously used adjusting ring slot with the pin holes in the valve stop and valve body and install the retaining pin. If the valve spring was replaced, align the intermediate height slot with the retaining pin. Use the adjusting tool shown in Figure 35 for adjusting the ring.
9. Place the priority valve stop, spring and valve in the valve body.
10. Depress the priority valve against its spring and install the spacer plate.
11. Position the vacuum modulator valve body on the spacer plate and secure with the three attaching bolts. Torque the bolts to specification.
12. Install the manual valve.

SELECTOR SHAFT

1. Remove the selector shaft retaining pin and locknut (Fig. 36).
2. Hold the selector lever and carefully slide the selector shaft from the case. Remove the selector lever.
3. Use the tools shown in Figure 37 and remove the seal from the case.
4. Coat the inside diameter of the new seal with oil soluble grease and the outside diameter with a non-hardening sealant.
5. Install a new seal as shown in Figure 38.
6. Slide the selector shaft through the seal and into the transmission case.

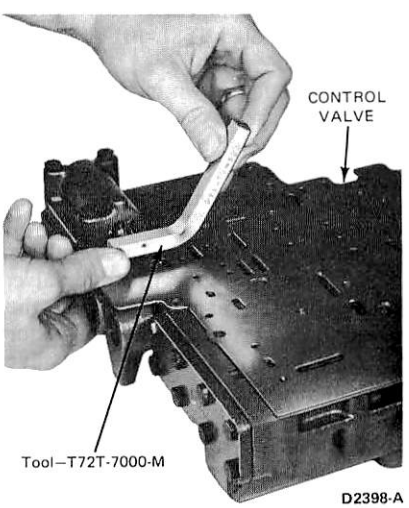

FIG. 35 Adjusting Vacuum Modulator Valve Ring

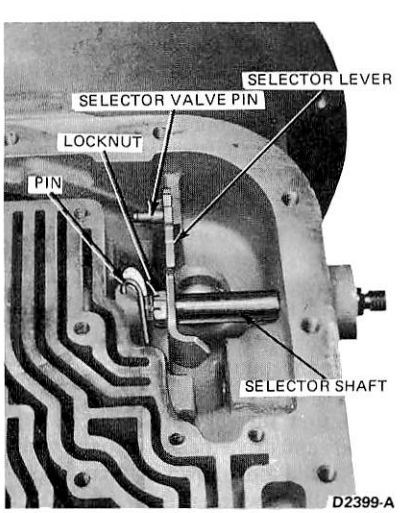

FIG. 36 Selector Shaft and Lever

7. Position the selector lever on the shaft and install the locknut. Torque the nut to specification. Install the retaining pin.

OIL PUMP

Disassembly

1. Remove the large seal ring from the O.D. of the front support (Fig. 39).
2. Remove eight bolts and seals from the oil pump body and six bolts from the front support assembly. Separate the oil pump body from the front support.
3. Remove the drive and driven gears from the pump body.
4. Remove the large seal ring from the O.D. of the pump housing.
5. Remove the oil seal from the pump body using Tools 1175-AB and T50T-100-A.
6. If the stator shaft bushing and/or front support roller bearing are worn or damaged, remove them using Tools T58L-101-A and T50T100-A.
7. Use the tool shown in Figure 40 to press the main pressure regulator valve spring stop against the spring pressure and remove the retainer ring from the front support assembly (Fig. 40).
8. Remove the main pressure regulator valve spring stop, spring and valve.
9. Remove the retaining pin from the small end of the pressure regulator valve bore and remove the valve plug.

Assembly

1. Place the valve plug in the small end of the pressure regulator valve bore and secure with the retaining pin (Fig. 39).
2. Place the main pressure regulator valve, spring and spring stop in the front support assembly. Install the retaining ring on the shaft of the tool. Depress the spring stop with the tool shown in Figure 40 and install the retaining ring.
3. If the stator shaft roller bearing was removed, use the tool shown in Figure 41 and install a new bearing into the shaft bore.
4. If the stator shaft bushing was removed, use the tool shown in Figure 42 and install a new bushing into the shaft bore.
5. Coat the pump body oil seal bore with non-hardening sealant. Position the oil seal in the pump body and drive the seal into the body with the tool shown in Figure 43.
6. Install a new seal ring on the O.D. of the pump body (Fig. 39).
7. Place the pump gears in the pump body.

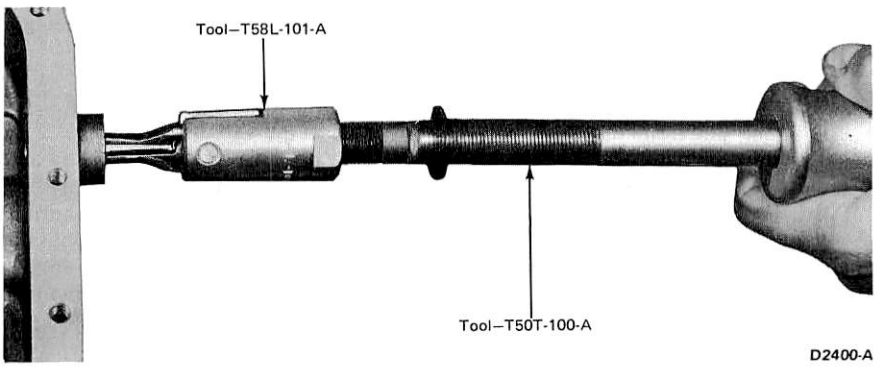

FIG. 37 Removing Selector Shaft Oil Seal

8. Position the front support on the pump body and install the 13 attaching bolts. Torque the bolts to specification.
9. Install a new seal ring on the O.D. of the front support.

FORWARD CLUTCH AND TURBINE SHAFT

Disassembly

1. Place the forward clutch and turbine shaft assembly on a work bench, with the shaft up. Remove the hook-type seal ring from the shaft (Fig. 44).
2. If equipped with a power take-off drive gear, remove the snap ring securing the drive gear to the forward clutch housing. To remove the snap ring, fabricate eight 5 inch lengths of 5/32 inch drill rod ground to a point at one end. Then, locate the snap ring gap between the I.D. of the PTO gear and the O.D. of the forward clutch housing (Fig. 45). Insert one of the pins, point first, into the flat area opposite the snap ring gap. Push the pin point between the O.D. of the snap ring and the PTO gear. Insert the remaining pins in the same manner, working alternately from each side of the first pin toward the snap ring gap as shown in Figure 45. When all the pins are inserted, tap the gear downward and off the clutch housing.
3. Remove the snap ring securing the fourth clutch driving hub to the forward clutch housing and remove the hub.
4. Remove the forward clutch hub.
5. Remove the needle bearing and needle bearing races from the hub of the forward clutch housing.
6. Remove the clutch plates.
7. Place the clutch assembly in a press with the spring retainer up. Compress the piston spring retainer with the tool shown in Figure 46.

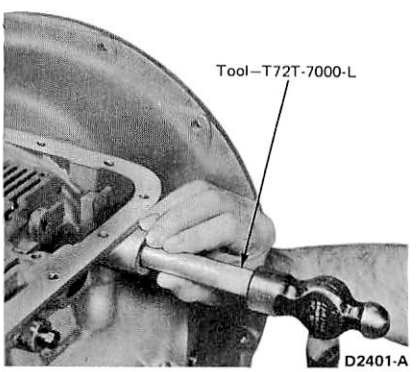

FIG. 38 Installing Selector Shaft Oil Seal

Remove the snap ring, tool, spring retainer, piston return springs and piston. Remove the inner and outer seal rings from the piston grooves.

8. Remove the seal ring from the forward clutch housing (Fig. 44).
9. Check the forward clutch housing ball to make sure it moves freely in the housing.

Assembly

1. Place the forward clutch housing assembly on a bench with the shaft down.
2. Install the clutch housing seal ring (Fig. 44). **Be sure the seal is centered in its groove with the lip of the seal facing downward.**
3. Place the clutch piston on the work bench with the return spring side up. Install the inner and outer seal rings. Install the piston inner seal protector on the hub of the clutch housing. Insert the piston backward into the outer seal protector, then hold the piston and large seal protector and insert as a unit into the housing. When the seal protector is properly seated in the housing, push the piston into place (Fig. 47). Remove the tools. **Be sure the seals are centered in their grooves with the lip of the seals facing downward.**
4. Install the piston into the forward

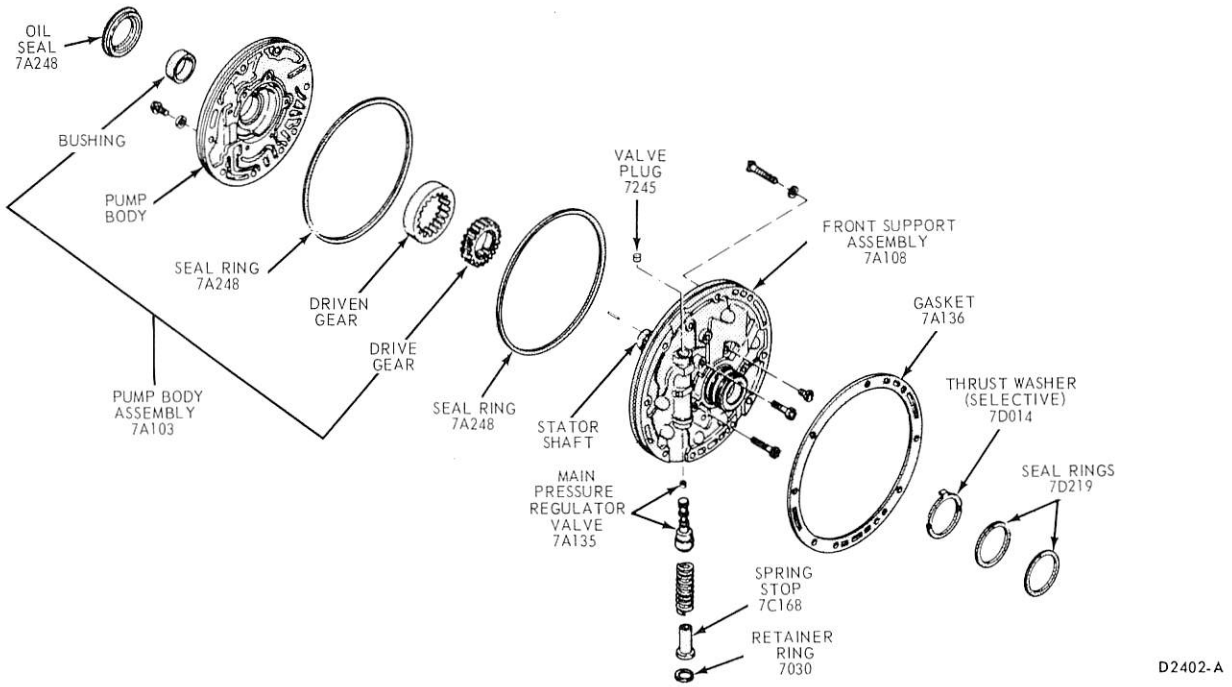

FIG. 39 Oil Pump Disassembled

clutch housing, making sure it bottoms in the housing. **Do not install the piston return springs at this time.**

5. Install the clutch plates alternately starting with an external-tanged plate.
6. Install the fourth clutch hub in the clutch housing and secure with the snap ring.
7. With the forward clutch clearance gauge, check the clutch running clearance between the driving hub and clutch pack (Fig. 48). This clearance should be 0.0765-0.1125 inch. The clutch driving hub should be held up firmly against the snap ring as the clearance is checked.
8. If the clearance is not within the specified limits, replace the clutch plate(s), as required, to obtain the desired clearance. Refer to the wear limit chart in the Specification Section to determine the plate(s) which should be replaced. If the clutch housing or driving hub has been replaced, it may be necessary to select a piston of different thickness.
9. Repeat steps 5, 6 and 7 above until the clearance is within the specified limits. Then, remove the driving hub snap ring and remove the hub and clutch plates.
10. Position the piston return springs on the piston spring guide bosses. Place the spring retainer on the springs with the recessed side of the retainer toward the springs.
11. Place the clutch assembly in a press and compress the spring retainer with the tool shown in Fig. 46. Install the snap ring. Make sure the snap ring is fully seated in the groove.
12. Place the flat needle bearing race on the forward clutch housing hub. Then, install the needle bearing and the remaining needle bearing race. Retain the bearing and races with oil soluble grease.
13. Install the forward clutch hub in the clutch housing (Fig. 44).
14. Install the clutch plates alternately starting with an external-tanged plate.
15. Install the fourth clutch driving hub in the clutch housing and secure with the snap ring (Fig. 44).
16. If equipped with a power take-off drive gear, install the snap ring in the O.D. of the forward clutch housing snap ring groove. Place the PTO gear, chamfered I.D. side down, onto the clutch housing. Compress the snap ring into the groove of the clutch housing and push the PTO gear down over the snap ring. Be sure the gear is properly positioned and the snap ring is fully seated.

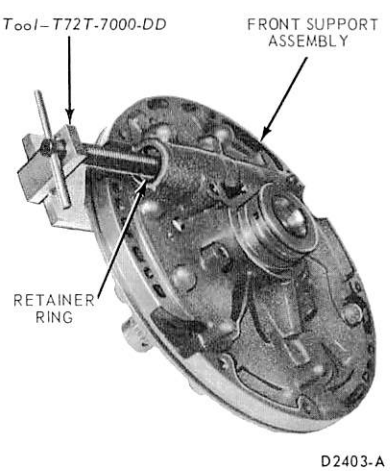

FIG. 40 Removing Or Installing Main Pressure Regulator Valve

17. Install the hook-type seal ring on the turbine shaft.

FOURTH CLUTCH

Disassembly

1. Place the fourth clutch assembly on a bench with the snap ring facing up.
2. Remove the snap ring securing the clutch back plate in the housing and remove the back plate and clutch plates (Fig. 49).

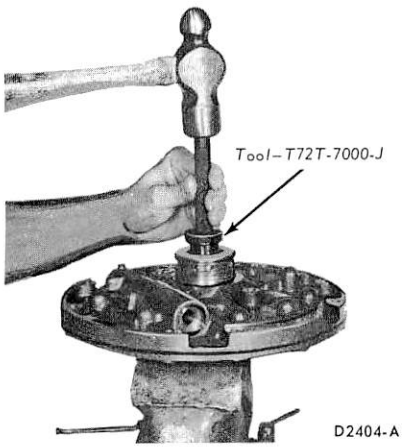

FIG. 41 Installing Stator Shaft Roller Bearing

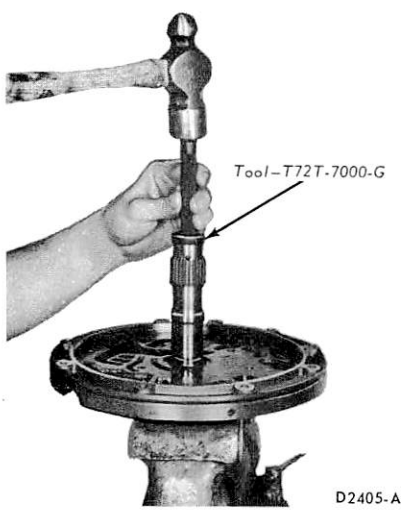

FIG. 42 Installing Stator Shaft Bushing

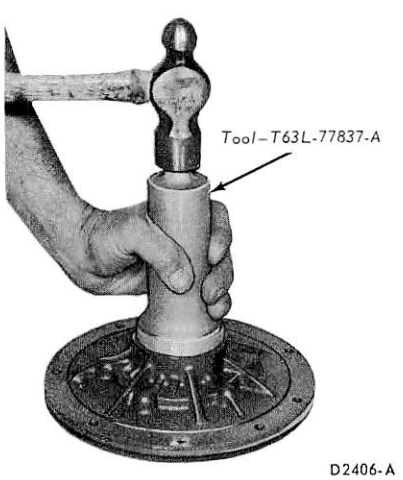

FIG. 43 Installing Oil Pump Seal

3. Place the fourth clutch assembly in a press with the spring retainer up. Compress the piston spring retainer with the tool shown in Figure 50. Remove the snap ring, tool, spring retainer, piston return springs and piston. Remove the seal ring from the O.D. of the piston.
4. Remove the seal ring from the clutch housing inner hub groove (Fig. 49). Check the groove thoroughly for burrs and rough spots.

Assembly

1. Place the fourth clutch housing on a bench with the open end up.
2. Install the clutch housing inner hub seal ring (Fig. 49). **Be sure the seal is centered in its groove with the lip of the seal facing downward.**
3. Place the clutch piston on the work bench with the return spring side up. Install the seal ring on the O.D. of the piston. **Be sure that the lip of the seal is facing downward.**
4. Install the piston into the fourth clutch housing using the tools shown in Figure 51. Install the piston inner seal protector on the hub of the clutch housing. Install the piston backward into the piston outer seal protector, then hold the piston and outer seal protector and insert as a unit into the housing. When the seal protector is properly seated in the housing, push the piston into place (Fig. 51). Remove the tools. **Do not install the piston return springs at this time.**
5. Install the clutch plates alternately starting with an external-tanged plate.
6. Install the back plate in the clutch housing and secure with the snap ring.
7. With the fourth clutch clearance gauge, check the clearance between the back plate and clutch pack (Fig. 52). This clearance should be 0.0625-0.1125 inch. The clutch back plate should be held up firmly against the snap ring as the clearance is checked.
8. If the clearance is not within the specified limits, replace the clutch plate(s), as required, to obtain the desired clearance. Refer to the wear limit chart in the Specification Section to determine the plate(s) which should be replaced. If the clutch housing or back plate has been replaced, it may be necessary to select a piston of different thickness.
9. Repeat steps 5, 6 and 7 above until the clearance is within the specified limits.
10. Position the piston return springs on the piston spring guide bosses. Place the spring retainer on the springs with the recessed side of the retainer toward the springs.
11. Place the clutch assembly in a press and compress the spring retainer with the tool shown in Figure 50. Install the snap ring. Make sure the snap ring is fully seated in the groove.

CENTER SUPPORT

Disassembly

1. Remove the second and third clutch pistons from the center support assembly (Fig. 53).
2. Remove the retainer washers from the piston pin bosses and remove the spring retainers and piston return springs.
3. Remove the inner and outer seal rings from each piston.
4. If the center support bushing is worn or damaged, replace the bushing with the tools shown in Figure 54. Mark the center support hub so that the notch in the new bushing is located in the same position in the center support as the notch in the discarded bushing.

Assembly

1. Place the second and third clutch pistons on a bench with the piston return spring sides up.
2. Place the piston return springs into each piston. Place the spring retainers on the springs. Depress the spring retainers and start new self-locking retainer washers on the piston pin bosses.
3. Before installing the piston seal rings, install the pistons in the center support assembly. The pistons should bottom in the center support before the spring retainers touch the outside diameter of the support. With the tangs on the spring retainers aligned with the slots of the center support, push the retainer washers on the piston pin bosses until the spring retainers are properly seated.
4. Remove the pistons from the center support assembly. Apply oil-soluble grease to the piston inner and outer seal ring grooves and install the seal rings. **Be sure the seal ring lips are facing toward the center support.**
5. Secure the slotted portion of the second clutch pack compressing tool in a vise and stack the second clutch plates alternately starting with a steel plate. Place the second clutch piston on the stacked plates and

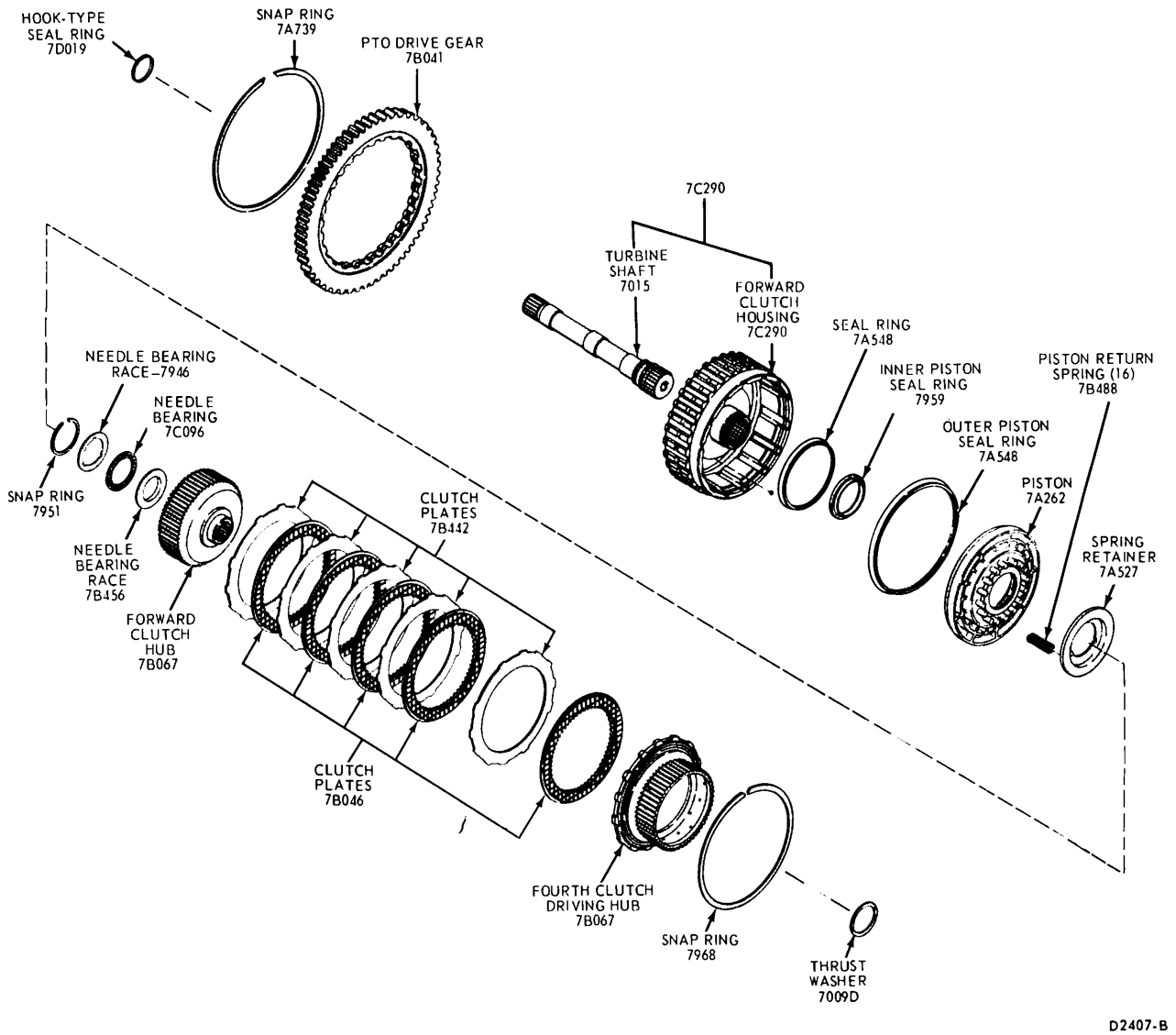

FIG. 44 Forward Clutch Disassembled

install the upper portion of the tool as shown in Figure 55. Torque the center bolt to 30-40 in-lbs. While the force is being applied, measure the distance at each end of the tool from the top of clutch pack to the shoulder below the outer piston seal ring groove (Fig. 55). This distance should be 1.4905-1.5165 inch if the second clutch back plate is stamped with a number 1. If the identification number on the back plate is stamped with a 2, the distance should be 1.5165-1.5425 inch.

6. If the distance is not within the specified limits, replace the clutch plate(s), as required, to obtain the desired measurement. Refer to the wear limit chart in the Specification Section to determine the plate(s) which should be replaced.
7. Apply a light coat of oil-soluble grease on the second and third clutch piston seal rings and install the pistons in the center support assembly using the tool shown in Fig 56. Install the piston backward into the tool and lower the piston and tool onto the center support. When the tool seats itself on the center support, push the piston into place (Fig. 56). Be sure the tangs on the spring retainers are aligned with the slots in the center support.
8. Install the two hook-type seal rings on the center support.

PLANETARY GEARS AND SHAFTS

Disassembly

1. Place the planetary gears and shafts assembly on its side on a work bench and remove the front planetary sun

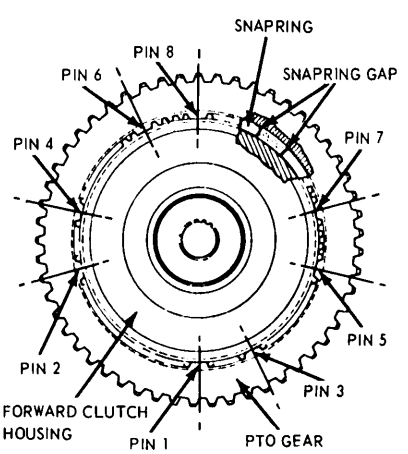

FIG. 45 Removing Power Take-Off Drive Gear

gear, carrier and selective thrust washer. Remove the larger thrust washer from the center planetary carrier assembly (Fig. 57).
2. Remove the front planetary ring gear snap ring and remove the ring gear, center planetary carrier, sun gear and thrust washer.
3. Remove the transmission mainshaft, center planetary ring gear and rear planetary sun gear as a unit.
4. Remove the needle bearing and race from the output shaft.
5. Remove the center planetary ring gear snap ring and remove the ring gear.
6. Remove the spiral retainer ring securing the rear planetary sun gear to the transmission mainshaft and remove the sun gear.
7. Push the output shaft toward the rear planetary ring gear and remove the snap ring. Remove the output shaft and bearing.
8. Remove the spiral retainer ring securing the rear planetary ring gear to the rear planetary carrier and remove the ring gear and two spacer washers.
9. Remove the snap ring securing the planetary connecting drum to the rear planetary carrier and separate the drum from the carrier.
10. The output shaft pin and bearing need not be removed unless replacement is necessary.
11. If the sun gear shaft and/or output shaft bushings are worn or damaged, remove them using Tools T58L-101A and T50T-100-A.
12. If the front planetary carrier bushing is worn or damaged, replace the bushing with the tools shown in Fig. 58.

Assembly

1. If the output shaft bushing was removed, install a new bushing using the tool shown in Figure 59.
2. If the sun gear shaft bushings were removed, install new bushings using the tool shown in Figure 60.
3. Install the output shaft pin and bearing, if they were removed (Fig. 57).
4. Position the rear planetary carrier assembly into the planetary connecting drum and secure it with the snap ring.
5. Position a spacer washer and the rear planetary ring gear on the hub of the rear planetary carrier. Place the remaining spacer washer on the planetary ring gear and secure the assembly with the spiral retainer ring.
6. Slide the output shaft and bearing into the rear planetary carrier and secure with the snap ring.
7. Install the rear planetary sun gear on the transmission mainshaft and secure it with the spiral retainer ring.
8. Install the center planetary ring gear on the rear planetary sun gear and secure with the snap ring.
9. Coat the needle bearing and race with grease and place them on the end of the output shaft. Be sure the race is positioned against the shaft.
10. Slide the small end of the mainshaft, with its attached parts, into the output shaft.
11. Grease and install the thrust washer on the end of the rear planetary sun gear. Install the center planetary sun gear, with the large diameter against the thrust washer.
12. Slide the center planetary carrier assembly into the planetary connecting drum.
13. Grease and install the large thrust washer on the front planetary carrier hub.
14. Install the front planetary carrier assembly on the center planetary sun gear.
15. Place the planetary gears and shafts in a holding fixture and install the tool shown in Figure 61. Use a 1/2-20 bolt (output shaft flange bolt) to apply pressure to the rear bearing and planetary carrier. Tighten the bolt to 30 ft-lbs torque.
16. Using a depth micrometer, measure the depth of the center planetary sun gear and front planetary carrier as shown in Figures 62 and 63. The difference between these measurements will determine which selective thrust washer to use. Selective thrust washers are stamped with identification numbers and are available in the following thicknesses:

Thickness	Identification No.
0.071-0.090 inch	1
0.090-0.109 inch	2
0.109-0.128 inch	3

After selecting the correct thrust washer, remove the front planetary carrier from the planetary gears and shaft assembly. Remove the tool from the output shaft.
17. Position the front planetary ring gear into the planetary connecting drum and secure it with the snap ring (Fig. 57).
18. Reinstall the front planetary carrier on the center planetary sun gear.
19. Grease and install the thrust washer, previously selected, on the center planetary sun gear.
20. Install the front planetary sun gear in the front planetary carrier assembly.

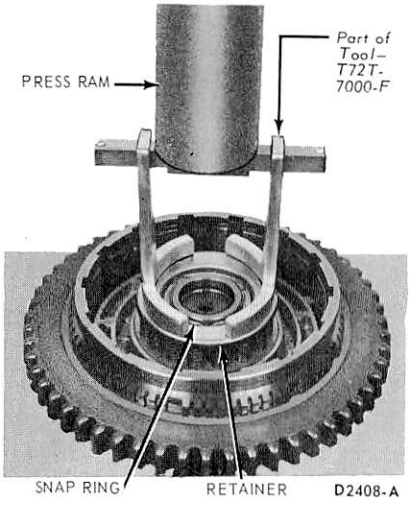

FIG. 46 Removing or Installing Forward Clutch Spring Retainer Snap Ring

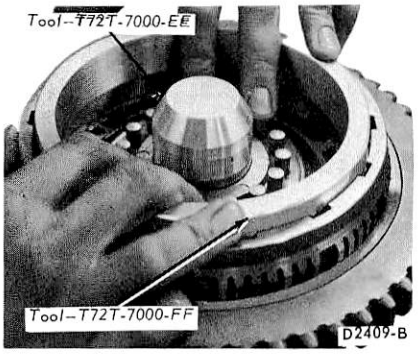

FIG. 47 Installing Forward Clutch Piston

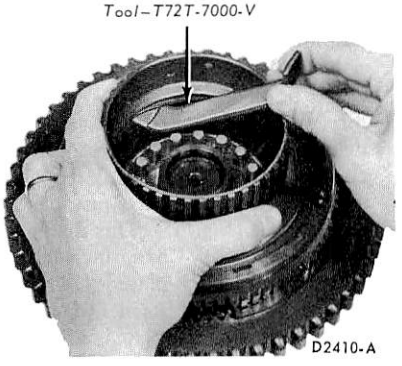

FIG. 48 Checking Forward Clutch Clearance

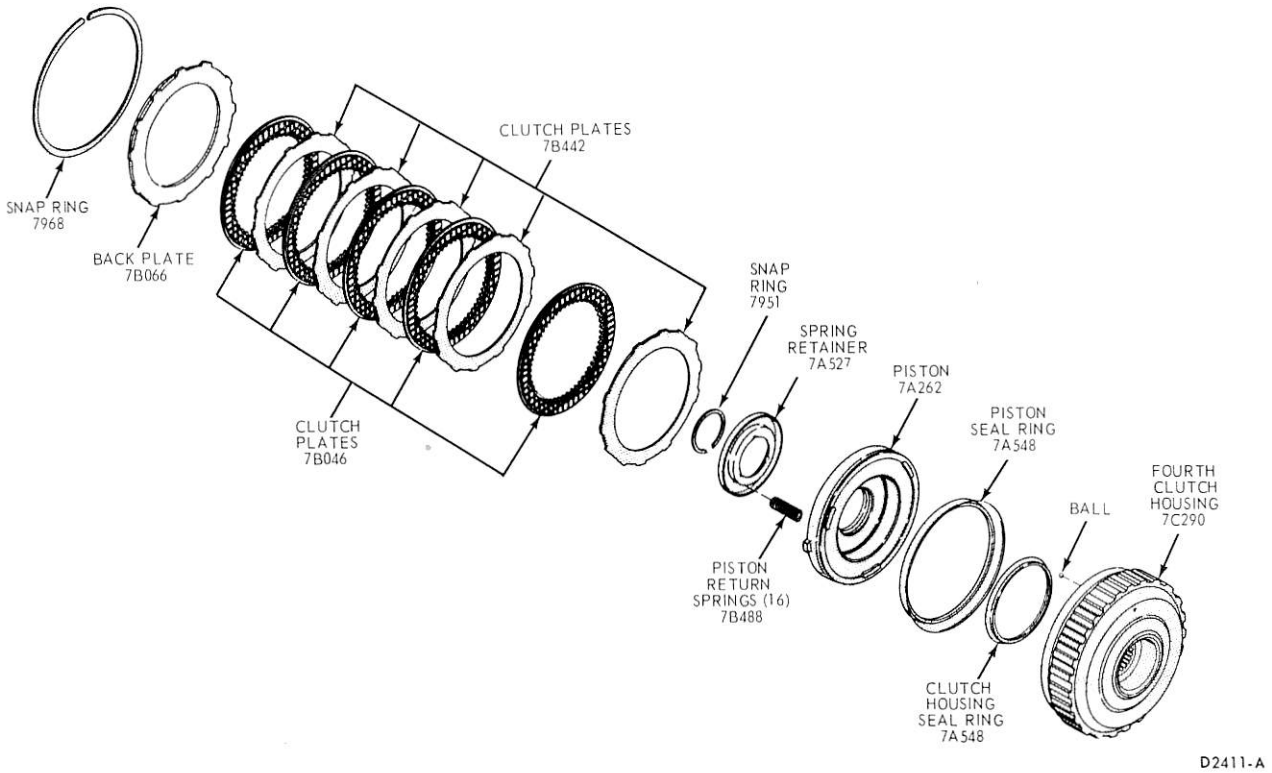

FIG. 49 Fourth Clutch Disassembled

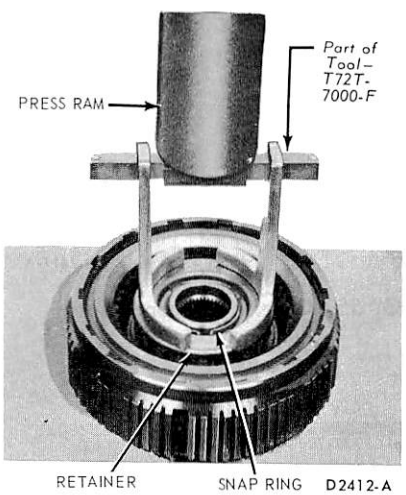

FIG. 50 Removing or Installing Fourth Clutch Spring Retainer Snap Ring

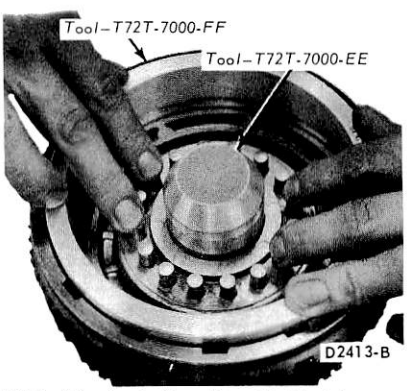

FIG. 51 Installing Fourth Clutch Piston

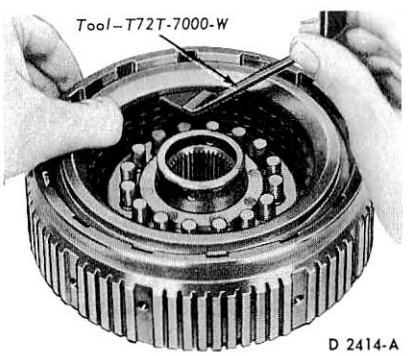

FIG. 52 Checking Fourth Clutch Clearance

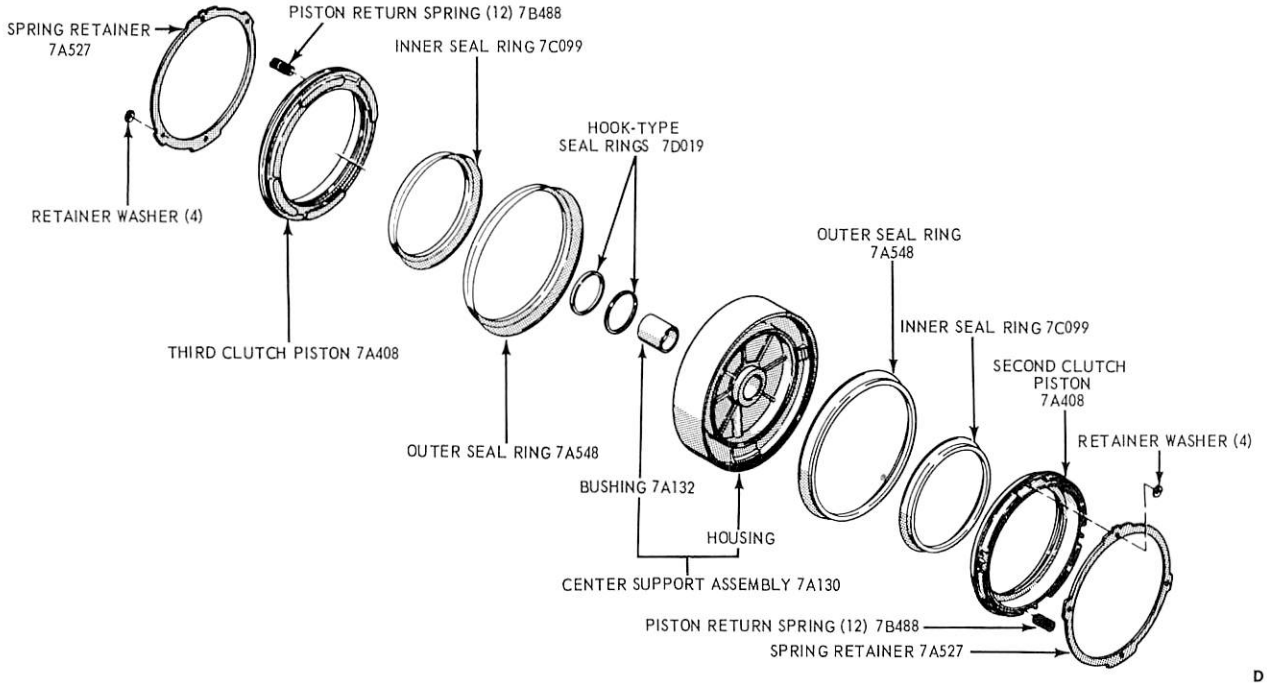

FIG. 53 Center Support Disassembled

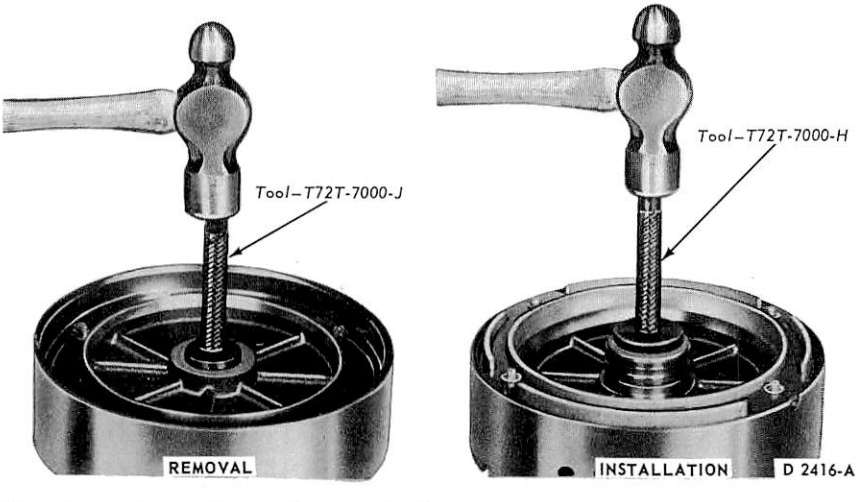

FIG. 54 Replacing Center Support Bushing

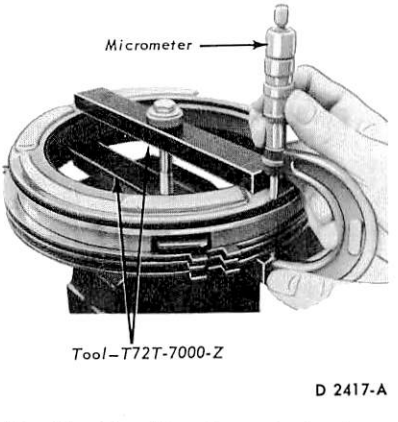

FIG. 55 Checking Second Clutch Running Clearance



FIG. 56 Installing Second and Third Clutch Pistons

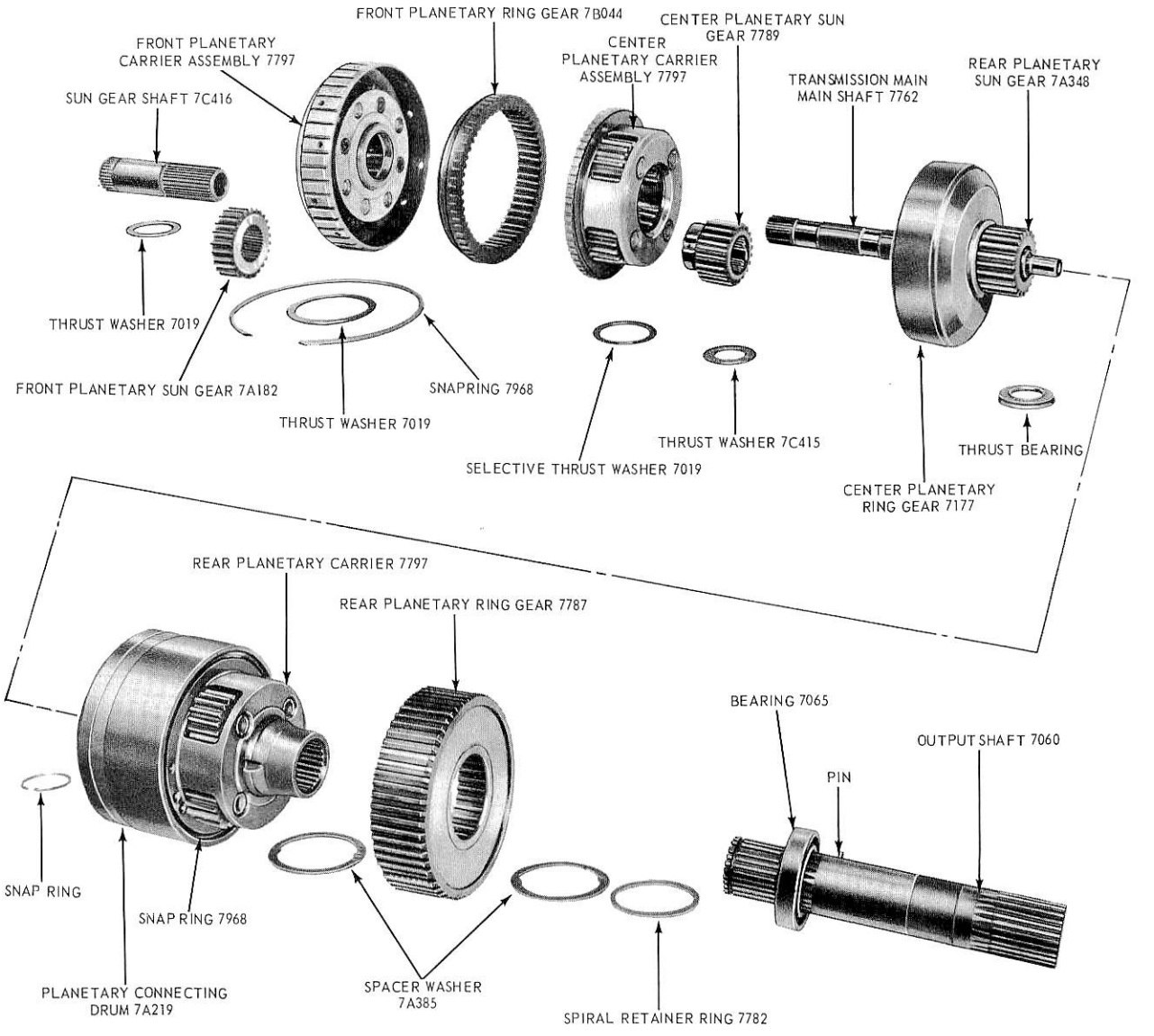

FIG. 57 Planetary Gears and Shafts

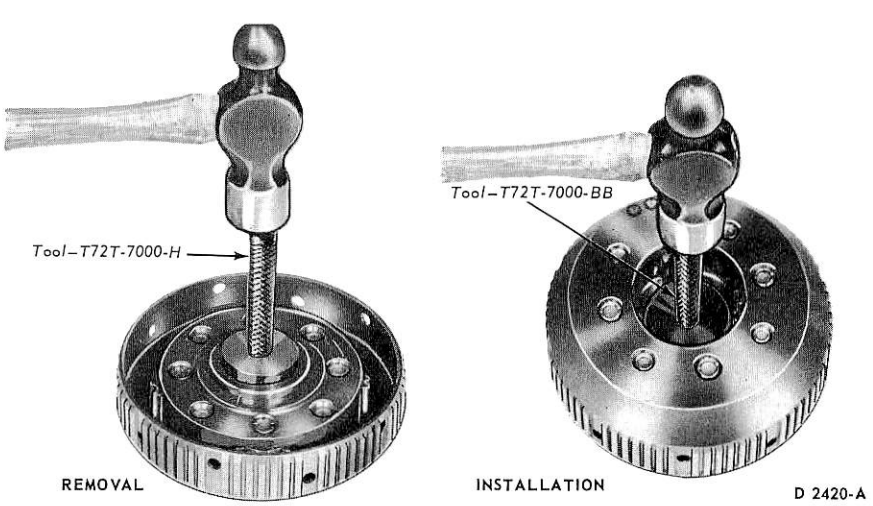

FIG. 58 Replacing Front Planetary Carrier Bushing

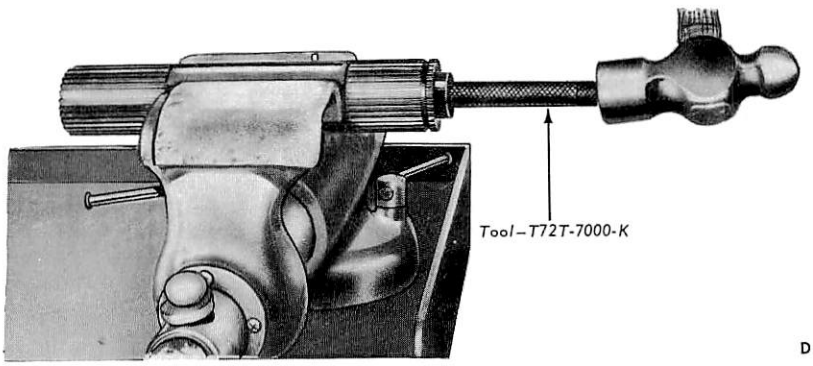

FIG. 59 Installing Output Shaft Bushing

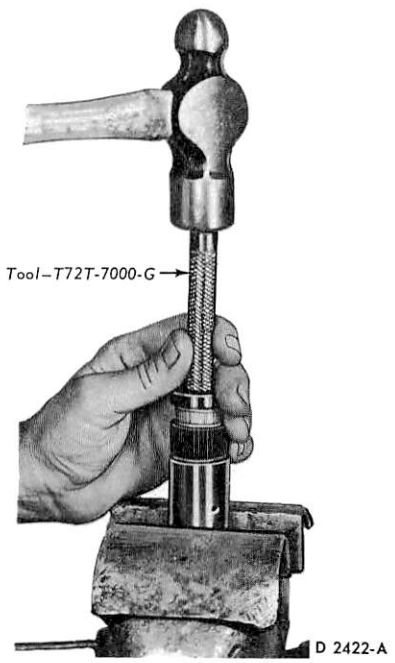

FIG. 60 Installing Sun Gear Shaft Bushing

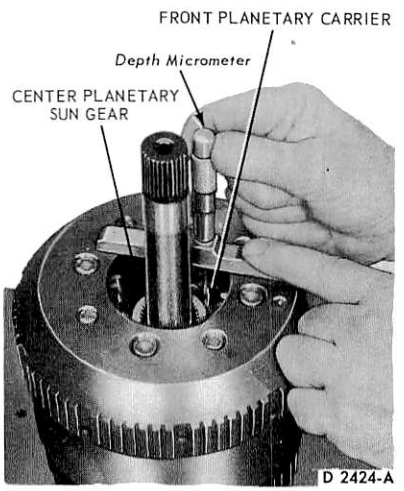

FIG. 62 Measuring Depth of Front Planetary Carrier

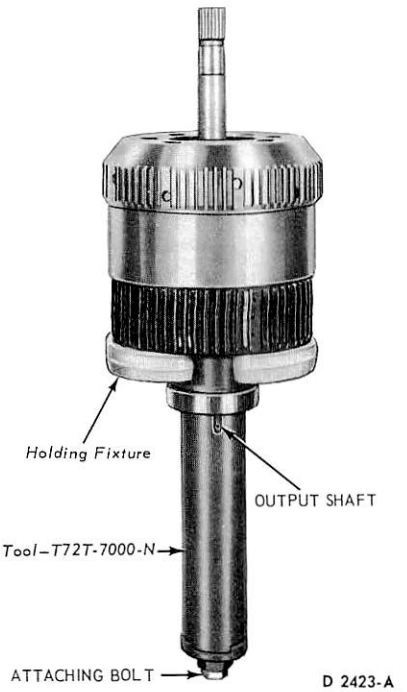

FIG. 61 Selective Thrust Washer Checking Tool Installation

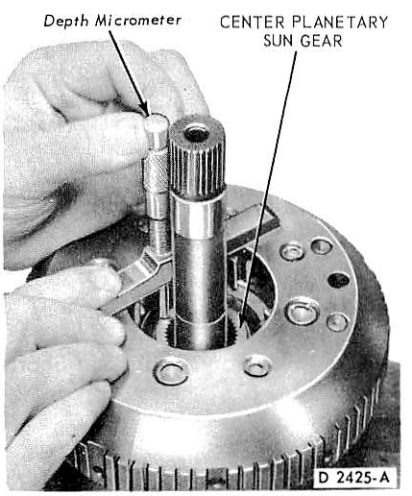

FIG. 63 Measuring Depth of Center Planetary Sun Gear

SPECIFICATIONS

GENERAL SPECIFICATIONS AT-540 TRANSMISSION

Dry Weight	275 Lbs.
Lubricant Capacity	15 Quarts (Dry)
Maximum Oil Temperature:	
Sump	250°F Max.
To Cooler-Converter Out	300°F Max.
Power Take-Off Mounting	SAE Regular Duty – 6-Bolt
Power Take-Off Drive Gear	55 Teeth, 6/8 Pitch
Speedometer Drive Gear	5 Teeth, 29 Normal Pitch

MAIN PRESSURE CHECKS AT-540 TRANSMISSION

Forward and Neutral	150 psi
Reverse	250 psi

TORQUE LIMITS AT-540 TRANSMISSION

Description	Ft. Lbs.
Oil Pump Body-to-Support Bolts	15-20
Output Flange Bolt	83-100
Front Support-to-Case Bolts	15-20
Power Take-Off Cover Bolts	15-20
Pressure Tap Plugs	10-15
Governor Cover Bolts	15-20
Vacuum Modulator Retainer Bolt	15-20
Modulator Valve Body-to-Control Valve Body Bolts	8-12
Trimmer Cover-to-Control Valve Body Bolts	8-12
Detent Spring-to-Valve Body Bolt	8-12
Control Valve Body-to-Case Bolts	8-12
Oil Filter Bolt	10-15
Oil Pan Screws	10-13
Center Support Anchor Bolt	39-46
Selector Shaft Nut	15-20
Converter-to-Flywheel bolts	34-40

TRANSMISSION WEAR LIMITS AT-540 TRANSMISSION

Description	Dimension	Wear Limits
TORQUE CONVERTER, OIL PUMP ASSEMBLIES		
Torque converter hub – clearance in bushing	0.0014-0.0040	0.0050
Pump driven gear – side clearance	0.0008-0.0015	0.0035
Pump drive gear – side clearance	0.0008-0.0015	0.0035
Stator shaft bushing – clearance on shaft	0.001-0.003	0.004
FORWARD CLUTCH AND TURBINE SHAFT		
Turbine shaft – clearance in bushing	0.001-0.003	0.004
External-tanged clutch plate – thickness	0.0885-0.0945	0.0885
Internal-splined clutch plate – thickness ①	0.076-0.084	0.071
Fourth-clutch driving hub – thickness at friction face	0.160-0.166	0.160
FOURTH CLUTCH		
Clutch back plate – thickness	0.174-0.180	0.174
Internal-splined clutch plate – thickness ①	0.076-0.084	0.071
External-tanged clutch plate – thickness	0.0885-0.0945	0.0885
SECOND CLUTCH, THIRD CLUTCH, CENTER SUPPORT		
Third-clutch back plate – thickness	0.416-0.426	0.416
Internal-splined clutch plate – thickness ①	0.095-0.102	0.090
External-tanged clutch plate – thickness	0.0955-0.1025	0.0955
Center support bushing – clearance on shaft	0.002-0.004	0.005
Second-clutch back plate (indent 1) – thickness	0.390-0.400	0.390
Second-clutch back plate (indent 2) – thickness	0.416-0.426	0.416
PLANETARY GEARS AND SHAFT ASSEMBLY		
Sun gear shaft bushing – clearance on shaft	0.001-0.0035	0.0045
Sun gear shaft – clearance in bushing	0.002-0.004	0.005
Transmission main shaft – clearance in bushing	0.001-0.0035	0.0045
Front planetary carrier bushing – clearance on sun gear	0.0014-0.0039	0.005
Output shaft bushing – clearance on shaft	0.0007-0.0027	0.004
FIRST-AND-REVERSE CLUTCH		
Back plate (indent 1) – thickness	0.683-0.693	0.683
Back plate (indent 2) - thickness	0.647-0.657	0.647
Back plate (indent 3) – thickness	0.611-0.621	0.611
Internal-splined clutch plate – thickness ①	0.095-0.102	0.090
External-tanged clutch plate – thickness	0.0955-0.1025	0.0955
TRANSMISSION CASE, GOVERNOR, AND VACUUM MODULATOR		
Transmission case – clearance of governor bore on governor	0.0008-0.0026	0.0035

① Minimum depth of oil grooves, 0.008

SPECIAL TOOLS

Ford Tool No.	Description	Ford Tool No.	Description
T50T-100-A	Slide Hammer	T72T-7000-Q	Converter Leak Test Fixture
T59L-100-B	Slide Hammer Assembly	T72T-7000-R	Converter End Play Checking Fixture
T58L-101-A	Puller Attachment	T72T-7000-S	Sun Gear Shaft Retainer
Tool-1175-AB	Seal Puller	T72T-7000-T	Rear Spacer Selection Gauge
Tool-4201-C	Dial Indicator and Bracket	T72T-7000-U	Front Thrust Washer Selection Gauge Bar
T72T-7000-B	Rear Bearing Remover	T72T-7000-V	Forward Clutch Clearance Gauge
T72T-7000-C	Rear Seal Replacer	T72T-7000-W	Fourth Clutch Clearance Gauge
T72T-7000-D	Pump Support Assembly Remover and Replacer Adapters	T72T-7000-X	First–Reverse Clutch Clearance Gauge
T72T-7000-E	Center Support Lifting Bracket	T72T-7000-Y	Third Clutch Clearance Gauge
T72T-7000-F	Clutch Spring Compressor	T72T-7000-Z	Second Clutch Pack Compressing Tool
T72T-7000-KK	First-Reverse Clutch Piston Inner Seal Protector	T72T-7000-AA	Rear Bearing Replacer
T72T-7000-G	Sun Gear Shaft and Front Support Bushing Replacer	T72T-7000-BB	Front Planetary Carrier Assembly Bushing Replacer
T72T-7000-H	Center Support Bushing Replacer	T72T-7000-CC	Transmission End Play Take Up Tool
T72T-7000-J	Front Support Bearing Replacer	T72T-7000-DD	Pressure Regulator Valve Spring Compressor
T72T-7000-K	Output Shaft Bushing Replacer	T72T-7000-EE	Forward & Fourth Clutch Piston Outer Seal Protector
T72T-7000-L	Shift Lever Oil Seal Replacer	T72T-7000-FF	Forward Clutch Piston Inner Seal Protector
T72T-7000-M	Valve Ring Adjusting Tool	T72T-7000-GG	Second & Third Clutch Piston Seals Protector
T72T-7000-N	Planetary Gear Assembly Compressor	T72T-7000-HH	First–Reverse Clutch Piston Outer Seal Protector
T72T-7000-P	Snap Ring Selection Tool	T72T-7000-JJ	Snap Ring Tool

CD2427-B

PART 17-30 MT-Series Automatic Transmission

Applies To C-750, C-CT-800, C-900, C-7000-8000, L-LT-LTS-LN-LNT-800-8000 and L-LT-LTS-900 Only

COMPONENT INDEX	Page
AIR PRESSURE CHECKS	30-05
ASSEMBLY OF TORQUE CONVERTER AND TRANSMISSION	30-14
BEARINGS	
Removal and Installation	30-10
BUSHINGS	
Removal and Installation	30-10
CLOSED THROTTLE STOP ADJUSTMENT	30-08
CLUTCH CLEARANCE CHECK	30-35
CONTROL PRESSURE CHECKS	30-04
CONTROL VALVE BODY	
Disassembly and Assembly	30-18
Removal and Installation	30-09
CONVERTER HOUSING	
Disassembly and Assembly	30-30
CONVERTER PUMP	
Disassembly and Assembly	30-28
CONVERTER PUMP COVER	
Disassembly and Assembly	30-28
CONVERTER STATOR	
Disassembly and Assembly	30-30
COOLING SYSTEM CHECK	30-05
DESCRIPTION	30-02
DISASSEMBLY OF TORQUE CONVERTER AND TRANSMISSION	30-12
DOWNSHIFT TIMING VALVE	
Disassembly and Assembly	30-27
DRAIN AND REFILL	30-10
FLUID FILTER	
Removal and Installation	30-10
FLUID LEVEL CHECK	30-03
FLUID TEMPERATURE WARNING LIGHT CHECK	30-05
FRONT PUMP	
Disassembly and Assembly	30-30
FLYWHEEL HOUSING ALIGNMENT	30-08

COMPONENT INDEX	Page
HIGH-RANGE CLUTCH	
Disassembly and Assembly	30-31
HYDRAULIC RETARDER CONTROL VALVE	
Disassembly and Assembly	30-27
HYDRAULIC RETARDER LINKAGE	
Adjustment	30-06
Checking	30-05
LOCKUP CLUTCH	
Disassembly and Assembly	30-28
INTERMEDIATE-RANGE PISTON HOUSING	
Disassembly and Assembly	30-35
LOW-RANGE AND REVERSE CLUTCH PISTON HOUSING	
Disassembly and Assembly	30-35
LOW-RANGE RING GEAR AND INTERMEDIATE-RANGE PLANETARY CARRIER	
Disassembly and Assembly	30-35
NEUTRAL START SWITCH	
Adjustment	30-05
OIL TRANSFER PLATE	
Disassembly and Assembly	30-26
Removal and Installation	30-10
PARKING BRAKE DRUM	
Removal and Installation	30-11
POWER TAKE-OFF DRIVING GEAR	
Disassembly and Assembly	30-31
RANGE SELECTOR SHAFT LEVER	
Disassembly and Assembly	30-27
RANGE SELECTER LINKAGE	
Adjustment	30-05
Checking	30-05
REVERSE-RANGE CLUTCH PLATE AND RING GEAR	
Disassembly and Assembly	30-35
SHIFT POINT CHECK	30-04
SPECIFICATIONS	30-37

Applies To C-750, C-CT-800, C-900, C-7000-8000, L-LT-LTS-LN-LNT-800-8000 and L-LT-LTS-900 Only

COMPONENT INDEX	Page	COMPONENT INDEX	Page
SPEEDOMETER DRIVE GEAR		THROTTLE LINKAGE	
Removal and Installation	30-11	Adjustments	30-08
SPLITTER MECHANISM		Checking	30-05
Disassembly and Assembly	30-31	TRANSMISSION (COMPLETE)	
THROTTLE CONTROL LEVER		Removal and Installation	30-08
Disassembly and Assembly	30-27	UNIVERSAL JOINT FLANGE	
		Removal and Installation	30-11

DESCRIPTION

TRANSMISSION

The Transmatic Drive is a hydraulically operated automatic transmission with six forward gear ratios and one reverse gear ratio. Figure 1 shows the location of the converter, gear train and most of the internal parts used in the transmission.

The transmission consists basically of a torque converter, a planetary gear train, and a hydraulic control system for shifting gears (Fig. 2).

An oil cooler, located in the vehicle radiator and connected to the transmission by tubing, cools the transmission fluid. A warning light, located on the instrument panel beneath the speedometer, indicates overheated fluid.

Two SAE regular-duty power takeoff openings are located at the sides of the transmission housing.

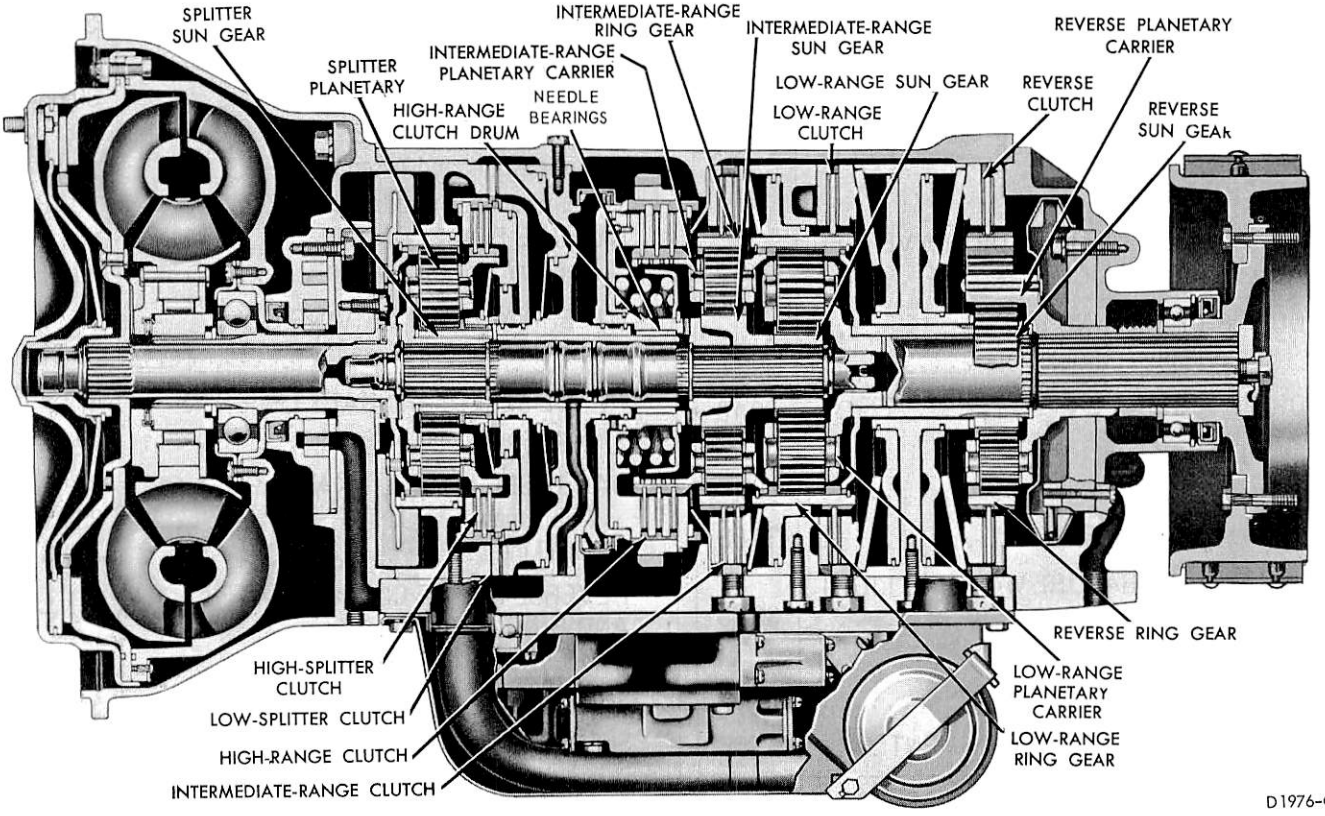

FIG. 1 Transmission Gear Train—Typical

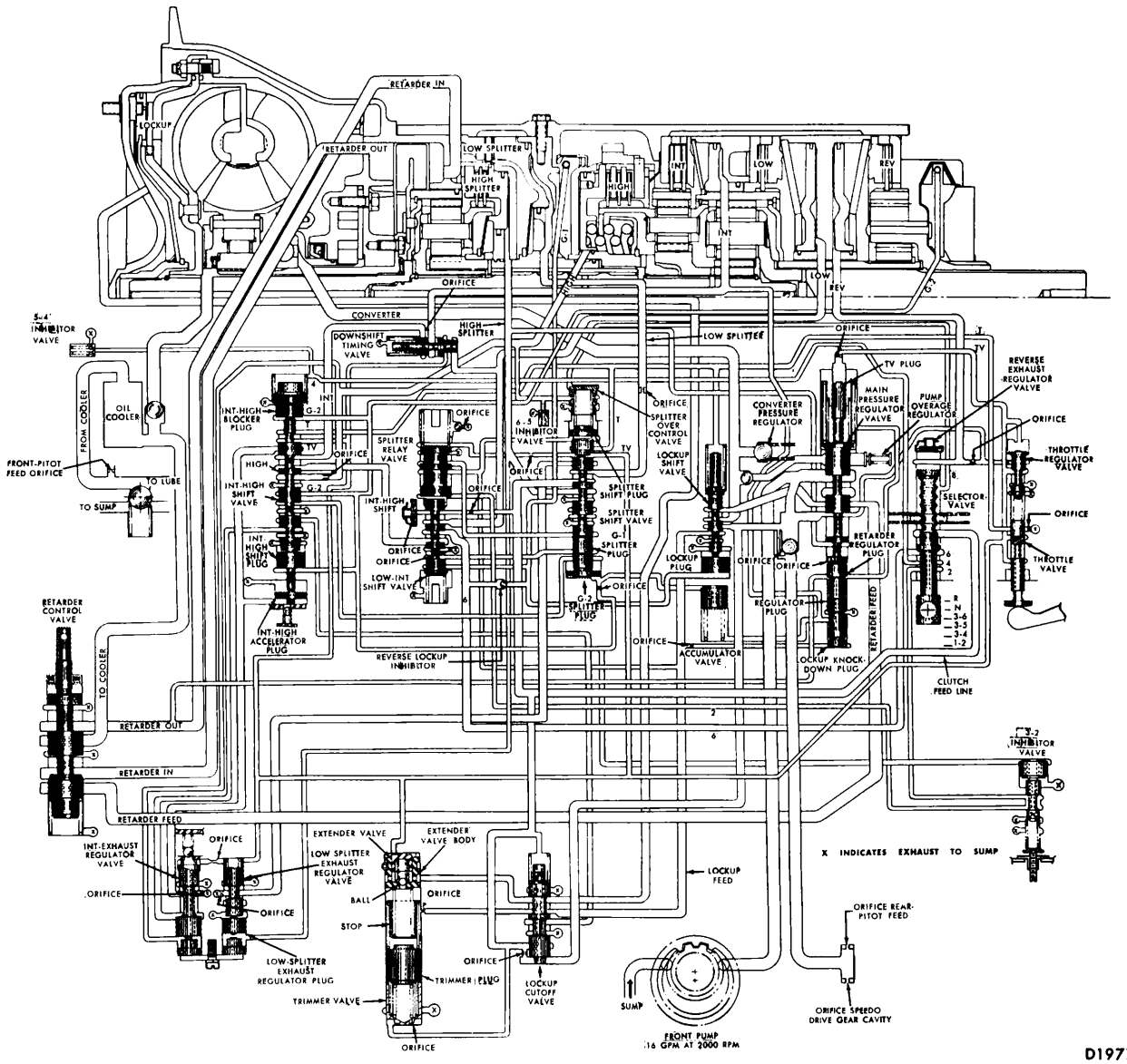

FIG. 2 Hydraulic Control System—Typical

TESTING

When diagnosing transmission problems, refer to the Truck Diagnosis Manual for the detailed information on the items that could be causing the problem.

TRANSMISSION FLUID LEVEL CHECK

1. With the vehicle standing, level, apply the parking brake, and place the range selector lever in N. Start the engine.
2. If the transmission fluid is cold, operate the transmission until normal operating temperature (150 degrees to 200 degrees F) are reached. **Do not operate the hydraulic retarder to warm the transmission fluid. Operating the hydraulic retarder when the vehicle is not moving will aerate the fluid, making an accurate fluid level check impossible.**
3. When the engine and transmission have reached their normal operating temperatures, move the selector lever through all the range positions to make sure that warm fluid is distributed throughout the transmission.
4. With the hand throttle, adjust the engine to idle speed with the selector lever at N.
5. Clean around the transmission fluid dipstick cap before removing the dipstick.
6. Twist the dipstick counterclockwise to unlock the cap from the tube. Pull the dipstick out of the tube, wipe it clean, and insert it back into the tube. On a C-Series truck, the dipstick can be removed through the opening in the panel behind the seat back cushion with the cab in its normal position.
7. Remove the dipstick again and check the fluid level. If necessary, add transmission fluid to raise the fluid level to the FULL mark on the dipstick. **If the fluid level is more than 5/16 inch above the FULL**

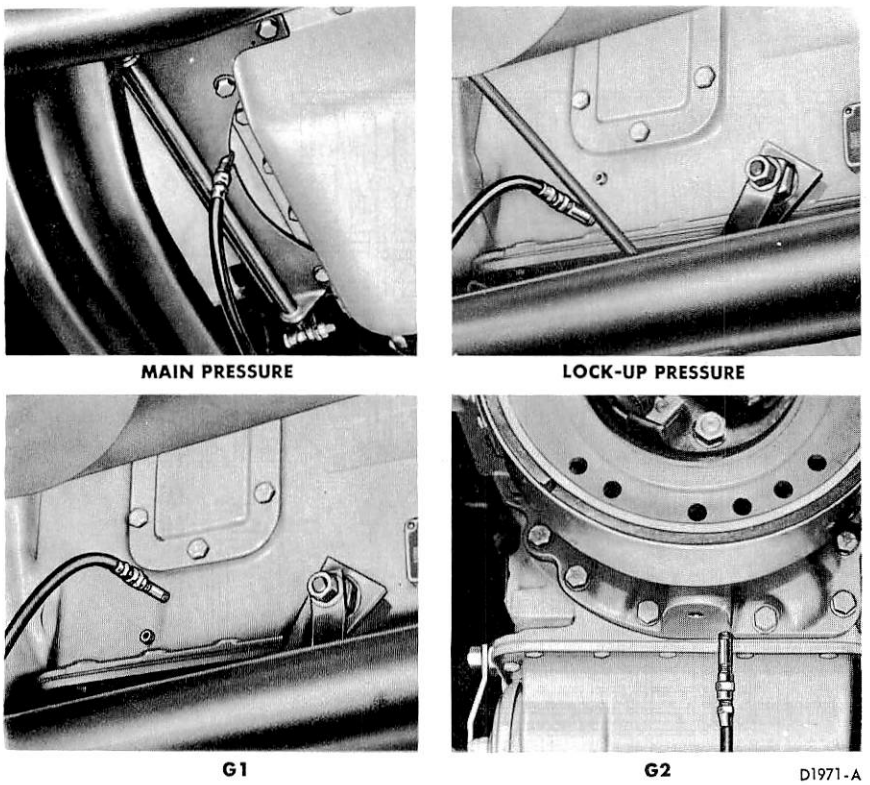

FIG. 3 Typical Fluid Pressure Checks

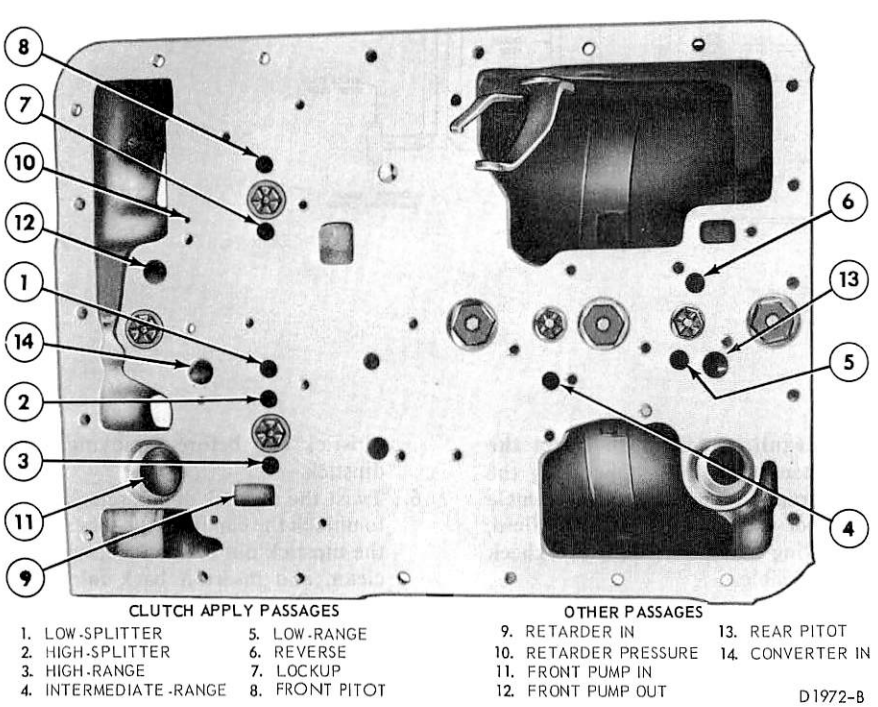

FIG. 4 Transmission Housing Fluid Passage Holes

mark, drain fluid until the FULL level is obtained.

8. Replace the dipstick in the tube. Turn the cap clockwise to lock it. **Failure to lock the cap may cause fluid leakage during retarder operation.**

If the fluid level remains low and leaks cannot be readily found, the use of dye tracers is often helpful in locating leaks. Oil-soluble aniline or fluorescent dyes, pre-mixed at 1/2 teaspoon of dye powder to 1/2 pint of transmission fluid, can help to determine whether an engine oil leak or a transmission fluid leak is present. Oil cooler leaks into the engine cooling system can also be found by using dye tracers. Always use a black light with the fluorescent dye solution.

After the leak has been found and corrected, the dye may be left in the transmission.

CONTROL PRESSURE CHECKS

Four 1/8-inch pipe plugs (Fig. 3) are provided in the transmission to check main, lockup, G1, and G2 fluid pressures.

All four pressures can be checked without driving the truck on the road. To obtain accurate readings, the procedures given below must be followed exactly.

All gauge readings should be taken with the transmission fluid at normal operating temperature (160-180 degrees F) and with the throttle and range selector linkage properly adjusted. The test point for main pressure (Fig. 3) is in the passage between the front pump outlet and the main pressure regulator valve. Since there is no check valve between the front pump and the main regulator valve, a gauge installed at this point will read main pressure under all operating conditions whether the pressure is coming from the front pump.

In normal operation, main pressure varies from 65 to 300 psi. Pressures vary with transmission model, converter and converter lockup operations, throttle positions, and range selector valve positions. Refer to the Specification Section for the fluid pressure checks.

SHIFT POINT CHECK

The Specification Section outlines the engine speeds at which the various shifts should occur.

AIR PRESSURE CHECKS

Moisture-free compressed air may be used to check the operation of the various clutches in the transmission, and to find leaks that may be caused by broken, damaged, or missing seals.

To make the air pressure checks, remove the oil pan, valve body, and oil transfer plate from the transmission. Then apply 85-100 psi (do not exceed 150 psi) air pressure at the appropriate holes in the mounting pad at the bottom of the transmission housing. These holes are identified and shown in Figure 4.

TRANSMISSION COOLING SYSTEM CHECK

Check the engine coolant level and add coolant if necessary.

If the fluid in the Transmatic Drive becomes contaminated with engine coolant (plain water, anti-freeze, or other additives), the transmission must be completely disassembled and thoroughly cleaned. Flushing will not remove the contaminated coolant from behind the pistons, fluid passages or converter.

Anti-freeze in the coolant may cause the transmission parts to be coated with gum. When this condition is encountered use either Butyl-Cellosolv or Methyl-Cellosolv (paint and varnish remover can be used as a substitute) to clean the metal parts. **Be sure that all passages in the case, diaphragm, piston housing, shafts, and valve bodies are clean and open before assembling the transmission.**

When a clutch failure or other internal trouble has occured in the transmission, any metal particles or clutch plate material that may have been carried into the oil cooler should be removed from the system by flushing the cooler before the transmission is put back into service. Foreign matter in the oil cooler system could block off the front pivot feed hole, get into various gears and clutches, or block off the output bushing lubrication orifice in the splitter shaft.

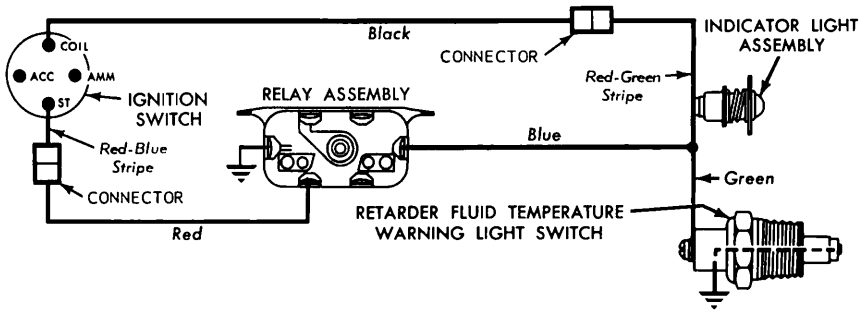

FIG. 5 Warning Light Circuit

TRANSMISSION FLUID TEMPERATURE WARNING LIGHT CHECK

Check the operation of the transmission fluid temperature warning light. The light should go on when the ignition key is turned to START, and it should go out when the ignition key is turned back to ON. The warning light circuit diagram is shown in Fig. 5.

RANGE SELECTOR LINKAGE CHECK

Move the range selector lever from 1-2 to R. Six definite detent positions (1-2, 3-4, 3-5, 3-6, N, and R) should be felt as the lever moves from front to rear.

HYDRAULIC RETARDER LINKAGE CHECK

The hydraulic retarder valve must travel a full 1/2 inch toward the rear, just before the retarder pedal hits the stop bolt. When the pedal is released, the retarder valve must travel 1/2 inch to the forward stop.

THROTTLE LINKAGE CHECK

When the throttle linkage is properly adjusted, maximum engine performance in starting and accelerating a heavily loaded truck is obtained automatically. The driver need only depress the accelerator pedal to the detent and hold it there. With the accelerator pedal held at the detent, the transmission will stay in the starting gear until engine crankshaft speed approaches the engine governed speed (maximum engine performance), then it will shift into the next higher gear. The automatic, full throttle (at detent) shifting just under governed speed will continue until the highest gear or desired road speed is reached.

ADJUSTMENTS

NEUTRAL START SWITCH

Check the starter circuit at all selector lever positions. The circuit must be open at all positions except N (neutral). To adjust, loosen the neutral switch to bracket attaching screws. Position the switch so that the starter circuit is closed when the selector lever is at N.

RANGE SELECTOR LINKAGE

1. Place the range selector lever at R.
2. Check the distance that the control cable adjusting threads extend above the sleeve assembled to the range selector arm (Fig. 6 or 7). This distance should not exceed 1/4 inch.
3. At the transmission, disconnect the range selector cable from the transmission control lever.
4. Shift the transmission control lever to R (all the way forward and upward).
5. Push the control cable up until the selector lever is at R. Adjust the threaded sleeve so that the sleeve pin just fits the hole in the control lever.
6. Assemble the sleeve on the lever.
7. From the driver's seat, feel for full

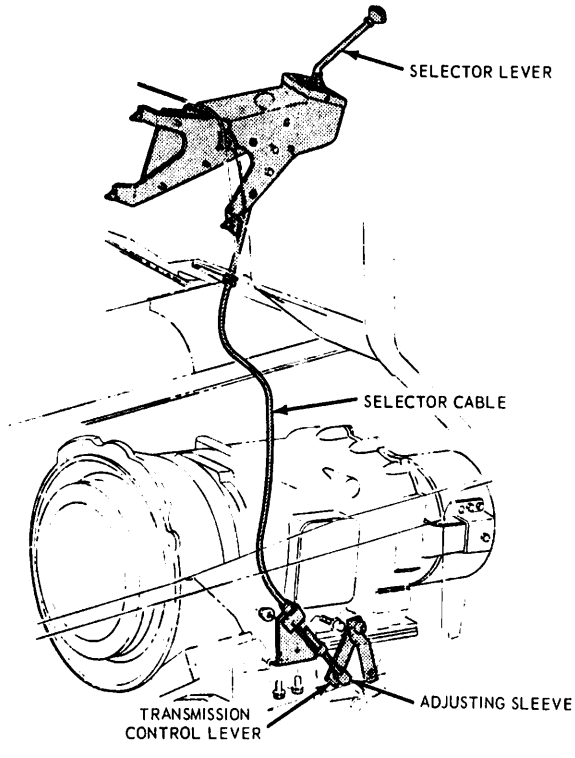

FIG. 6 Range Selector Linkage on L, LT, LN or LNT-Series Trucks

engagement at each detent position before the lever hits its stops.

HYDRAULIC RETARDER LINKAGE

L, LT, LTS, LN OR LNT-SERIES TRUCK

1. Check the hydraulic retarder pedal stop bolt height against the dimension shown in Fig. 8. Adjust as required.
2. Disconnect the hydraulic retarder control rod at the transmission end.
3. Pull the retarder lever toward the rear of the transmission until the retarder valve is heard and felt to bottom in the retarder casting.
4. Pull the control rod down until the pedal contacts its stop bolt.
5. With the retarder valve bottomed in its casting and the pedal against its stop bolt, adjust the control rod threaded sleeve.
6. Attach the control rod to the lever. Tighten the locknut.
7. Readjust the retarder pedal stop bolt height to provide 1/2 inch of travel at the retarder valve.
8. Check the adjustment by depressing the pedal against the stop bolt. Just before the pedal hits the stop bolt, the retarder valve should be felt to

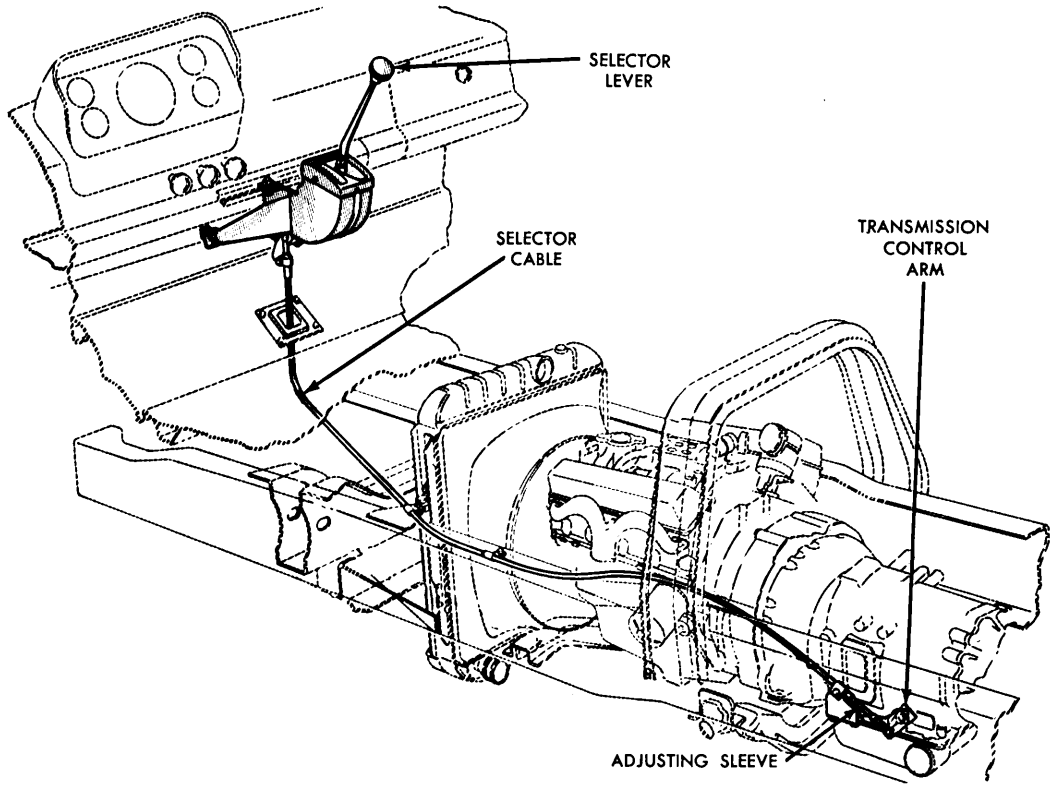

FIG. 7 Range Selector Linkage on C-Series Truck

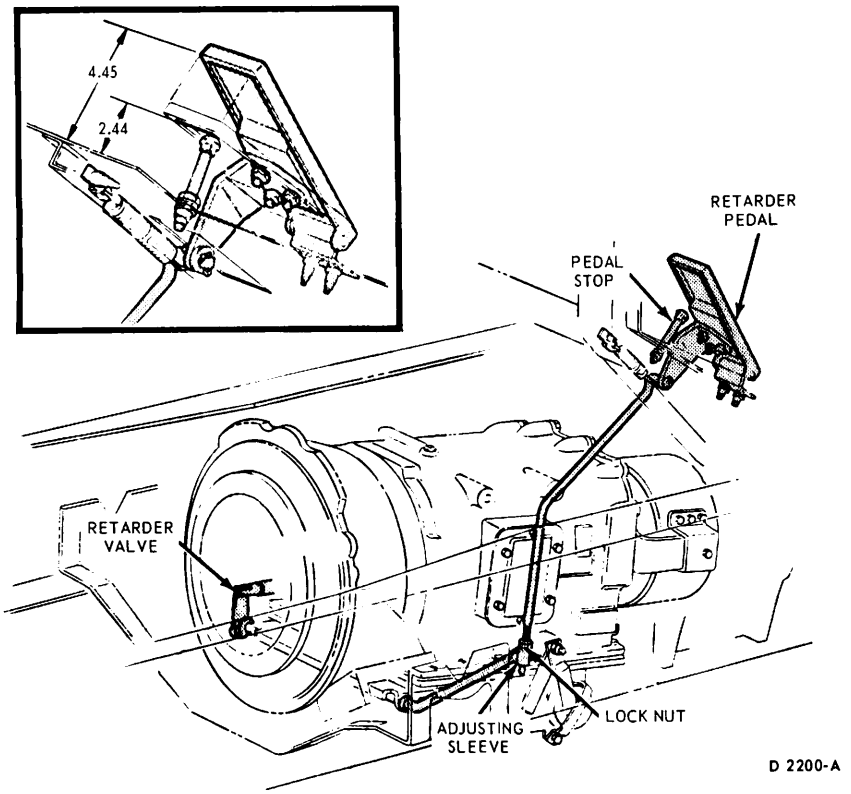

FIG. 8 Hydraulic Retarder L, LT, LN or LNT-Series Truck

bottom in its body. Check for full release. Readjust if necessary.

C-SERIES TRUCK

1. Adjust the retarder pedal stop bolt height as shown in Fig. 9.
2. Disconnect the retarder control cable at the transmission.
3. Pull the retarder lever toward the rear of the transmission until the retarder valve is heard and felt to bottom in its body.
4. Pull the retarder cable toward the transmission until the pedal is against its stop bolt.
5. With the retarder valve bottomed (all the way to the rear) and the retarder pedal against its stop, adjust the cable adjusting sleeve.
6. Attach the cable to the lever.
7. Readjust the retarder pedal stop bolt height to provide 1/2 inch of travel at the retarder valve.
8. Check the adjustment by depressing the pedal against the stop bolt. The retarder valve should be felt to bottom just before the pedal hits the stop bolt.

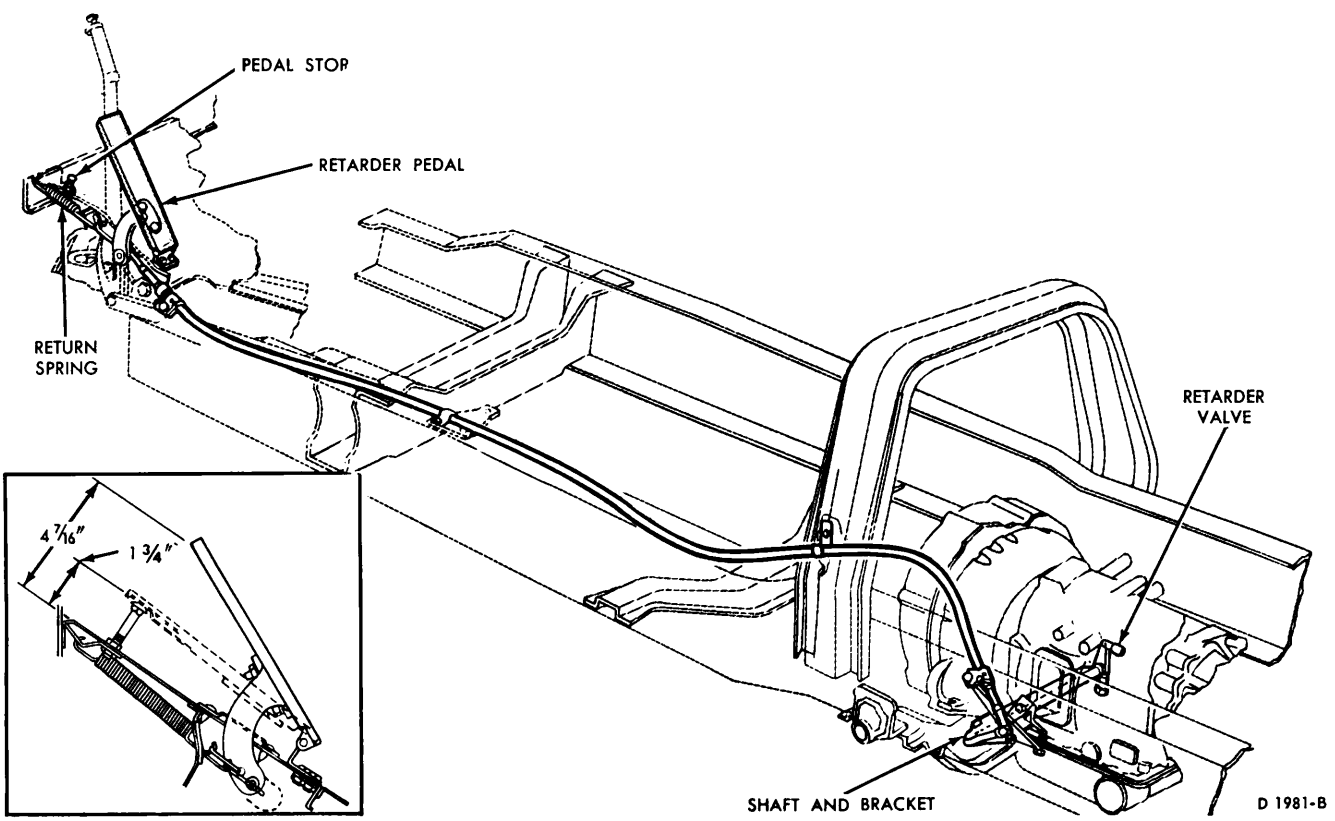

FIG. 9 Hydraulic Retarder Linkage on C-Series Truck

THROTTLE LINKAGE

The throttle linkage should be adjusted whenever the engine idle speed is changed, and whenever the transmission operation indicates that adjustment is required. Refer to Groups 24 or 25 for the detailed throttle linkage adjustment procedures.

CLOSED THROTTLE STOP

The closed throttle stop is accurately adjusted to each individual transmission in production. New service control valve bodies are **not preset. Therefore, whenever a new service control valve body is being installed, the closed throttle stop must be adjusted as follows:**

1. On the **removed** valve body, bottom the throttle valve.
2. Accurately measure the distance from the end of the valve to the end of the adjusting screw (Fig. 10).
3. On the new valve body, bottom the throttle valve and adjust the screw to get the dimension measured in step 2.
4. Crimp the sleeve against the adjusting screw to hold the adjustment.

FLYWHEEL HOUSING ALIGNMENT

Whenever the flywheel housing has been replaced, or when the original housing is to be used on another engine, check the alignment of the housing bore and rear face with the engine crankshaft.

1. Check the mating surfaces of the engine and the flywheel housing for raised metal, paint, nicks, or burrs. Remove any marks or material that would affect alignment.
2. Position the flywheel housing on the two dowel pins in the engine, then bolt the housing in place.
3. Check the runout of the flywheel housing bore and rear face with a dial indicator mounted on the engine crankshaft. If the total indicator reading of the bore runout exceeds 0.008 inch, or if the total indicator reading of the rear face runout exceeds 0.010 inch, repeat the check with another housing.
4. If either runout on the housing checked is not within limits, remove the two dowel pins from the engine. **Be careful not to drill the upper dowel pin too deeply as the dowel pin is in a blind hole which may break through into the water jacket or cylinder wall.**
5. Bolt the flywheel housing in place without dowel pins, then adjust the housing to get the correct bore runout. Tighten the bolts and ream the dowel pin holes large enough for oversize dowel pins.
6. Check the runout with the new oversize dowel pins in place, and with the mounting bolts tightened to 40-45 ft-lbs.

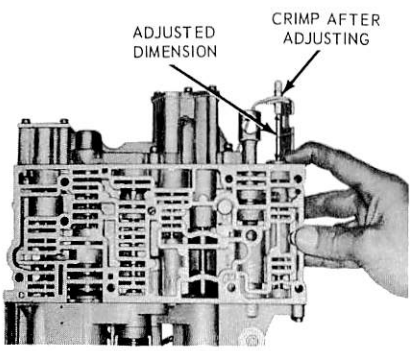

FIG. 10 Throttle Valve Adjustment

REMOVAL AND INSTALLATION

TRANSMISSION

Removal

The torque converter and transmission must be removed from and installed in the vehicle as a unit. The transmission cannot be removed from or installed on the converter in the vehicle.

Except where noted, these removal and installation procedures apply generally to all vehicles.

1. If necessary raise the vehicle on a hoist. Loosen the filter cover and drain the transmission. The torque converter cannot be completely drained until it has been removed from the vehicle. **Do not remove the filter cover from the oil pan as the transmission fluid may gush out too quickly.** When the fluid stops flowing tighten the filter cover nut.
2. On a one-piece drive line, disconnect the shaft from the pinion flange and from the yoke at the parking brake drum. **Do not remove the bolt that attaches the flange on the transmission output shaft.** On a two-piece drive line, disconnect the coupling shaft from the yoke at the parking brake drum, and then remove the center support bearing bracket. Move the forward end of the drive shaft out of the way.
3. Disconnect the speedometer cable from the rear of the transmission.
4. Loosen the breather hose clamp on the fittings above the left power take-off plate, and then remove the fluid filler tube support strap bolt located halfway up the tube. Disconnect the tube at the oil pan, and remove the breather hose and tube together.
5. Disconnect the throttle control rod and the range selector lever cable from the levers on the left side of the transmission housing. Remove the cable clamp bracket from the housing.
6. Disconnect the hydraulic retarder linkage from the linkage cross shaft, and remove the cross-shaft from the front of the oil pan.
7. Disconnect the parking brake linkage.
8. Disconnect the fluid temperature warning light wire from the switch terminal on the retarder valve outlet fitting. Then remove the switch from the fitting.
9. Disconnect the oil cooler lines from the fittings on the retarder valve body, then remove the forward fitting. Plug the lines and valve body openings. If desired, the lines and valve body can be drained, but they should be plugged before removing the converter and transmission from the vehicle.
10. Remove the dust shield from the bottom front side of the flywheel housing.
11. Remove the six nuts and flat washers that hold the converter pump cover on the engine flywheel. The nuts and washers can be reached through an opening in the lower right side of the flywheel housing. The flywheel must be

turned to remove all nuts and washers. **The ignition system should be disconnected during this operation to prevent accidental starting of the engine.**

12. Cut the lock wires and remove the two bolts and nuts that hold the converter housing to the frame crossmember.
13. Cut the lock wire and remove the two bolts, washers, insulators from the top of the transmission rear support and crossmember.
14. Place an engine support under the rear end of the engine, then raise the engine to take the weight off the crossmember.
15. Support the transmission with a 1000-pound transmission jack. The jack should be placed so that the oil pan does not support the entire weight of the transmission. Fasten a safety chain over the top of the transmission and to both sides of the jack.
16. Remove the two bolts from each end of the transmission rear support crossmember, and remove the crossmember.
17. Remove the bolts and lock washers that attach the converter housing to the flywheel housing.
18. Move the converter and transmission away from the engine until the converter housing clears the crossmember, then lower the unit. If necessary, raise the floor pan slightly to permit the converter housing to clear the crossmember.

Installation

If the engine, flywheel, or flywheel housing has been replaced, check the flywheel housing alignment and flywheel shim adjustment before installing the torque converter and transmission.

1. Raise the converter and transmission on the jack, then move the unit into position over the crossmember that supports the converter. Align the studs in the converter cover with the holes in the flywheel. Install two guide studs in the flywheel housing, then push the unit forward so that the converter studs enter the holes in the flywheel.
2. Install the bolts, except the fluid filler tube support strap bolt, and lock washers that attach the converter housing to the flywheel housing. Torque them 23-28 ft-lbs.
3. Install six new self locking nuts and flat washers that hold the converter on the engine flywheel, and torque them to 34-40 ft-lbs.
4. Install the dust shield on the bottom front side of the flywheel housing.
5. Install the transmission rear support crossmember on top of the frame brackets, then install the two bolts on each end of the crossmember. Torque the bolts to 40-45 ft-lbs.
6. Lower the jack, remove it from under the vehicle, then remove the engine support from under the rear end of the engine.
7. Install the two bolts and nuts that hold the converter housing to the frame crossmember, and torque them to 70-91 ft-lbs. Install the lock wires.
8. Install the two bolts, washers, and insulators at the transmission rear support. Torque the bolts to 40-60 ft-lbs and install the lock wire.
9. Install the oil cooler line fitting in the forward fluid opening of the retarder valve body. **Then install the fluid temperature warning light switch on the fitting. Connect the warning light wire to the switch terminal.**
10. Connect the two oil cooler lines to the retarder valve body fittings.
11. Install the retarder linkage cross-shaft on the front of the oil pan, and torque the screws to 15-18 ft-lbs. Connect the retarder linkage to the cross-shaft and the valve.
12. Install the range selector lever cable bracket on the left side of the transmission housing, and torque the screws to 8-10 ft-lbs.
13. Connect the range selector lever cable and the TV rod to the levers on the left-hand side of the housing. **Be sure to install the TV rod in the outer hole of the lever.**
14. Connect the fluid filler tube to the oil pan, then install the tube support strap bolt in the converter housing.
15. Push the breather hose across the top of the transmission and connect it to the fitting above the left power take-off plate. Tighten the hose clamp.
16. Connect the parking brake linkage.
17. If the exhaust system was removed or disconnected during removal, install and connect the parts.
18. Install the drive shaft, the center bearing support bracket, and the coupling shaft. Connect the coupling shaft to the parking brake drum. Torque all nuts and bolts to specifications.
19. Connect the speedometer cable to the rear of the transmission.
20. Adjust the retarder, throttle control rod, and range selector lever linkages.
21. Check all fluid line connections and the filter cover for tightness, then lower the vehicle to the floor.
22. Add enough automatic transmission fluid to the converter and transmission to bring the fluid level to the full mark on the dipstick.

CONTROL VALVE BODY

Removal

1. Remove the fluid filter cover and gasket, then remove the retainer and filter from the transmission oil pan.
2. Remove the oil pan and gasket.
3. Remove the filter can and pickup tube assembly from the top of the control valve body.
4. Remove the seal rings from the front pump pickup tube.
5. Remove the eight bolts that hold the control valve body on the oil transfer plate, and lift the body from the plate (Fig. 11). The shift valve steel detent ball and spring and the nylon ball are free to fall out of the valve body when it is removed from the transfer plate.

Installation

If a new control valve body is being installed, the closed throttle stop must be adjusted as described in Steps 1 thru 4 below.

1. On the **removed** valve body, bottom the throttle valve.
2. Accurately measure the distance from the end of the valve to the end of the adjusting screw (Fig. 10).
3. On the **new** valve body, bottom the throttle valve and adjust the screw to get the dimension measured in step 2.
4. Crimp the sleeve against the adjusting screw to hold the adjustment.
5. Place the detent shift valve spring in the oil transfer plate and the steel ball in the control valve body. Hold the ball in place with the oil-soluble grease. Position the control valve body on the plate, making sure that the range selector shaft enters the hole in the control valve and that the TV lever is against the valve. Install the attaching bolts, sleeves and lock washers and torque evenly to 4-6 ft-lbs.
6. Place a new seal ring on the long tube end of the filter can and install the assembly over the control valve body.
7. Install a new oil pan gasket on the transmission housing with the bolt holes properly aligned.
8. Inspect the oil pan for damage. If the pan is severely damaged, replace it.
9. Install the oil pan on the housing. Install the oil pan bolts and lock washers and torque to 15-18 ft-lbs.
10. Install a new fluid filter element in

the oil pan and install the fluid filter retainer, a new gasket, and the cover.

OIL TRANSFER PLATE

Removal

1. Remove the control valve body as outlined in this Section of the Manual.
2. Remove the downshift timing valve body from the transfer plate.
3. Remove the transfer plate from the transmission housing. A nylon ball in the plate is free to fall when the plate is removed.
4. Remove the hydraulic retarder valve body and gasket. Remove the nylon ball from the housing.

Installation

1. Insert the hydraulic retarder valve teflon ball in the transmission housing, install a new gasket on the transmission housing, and then install the hydraulic retarder control valve body assembly (Fig. 12). Install the mounting bolts. Torque the long bolts to 14-17 ft-lbs and the short bolts to 15-18 ft-lbs.
2. Position the oil transfer plate on the housing (Fig. 13).
3. Coat the lube line check valve nylon ball with oil-soluble grease and insert it into the oil transfer plate. Install the oil transfer plate. Install the oil transfer plate and secure it with the 10 bolts and lock washers (Fig. 14). Install the two short bolts at the thin section of the oil transfer plate. Torque the bolts to 8-10 ft-lbs.
4. Position the downshift timing valve body on the oil transfer plate and install the three short bolts and lock washers. Torque the bolts to 8-10 ft-lbs.
5. Reinstall the control valve body.

TRANSMISSION FLUID CHANGE AND FLUID FILTER

Removal and Installation

On a new vehicle the transmission fluid should be drained and a new filter installed after the first 2000 miles of operation. Thereafter, in normal highway operation, the fluid and filter should be changed as recommended in the maintenance manual. If the vehicle is in off-the-highway or frequent stop-and-go service the fluid and filter should be changed at more frequent intervals.

After the correction of any transmission failure, change the fluid and install a new filter. After a major failure, replace the fluid and filter at overhaul and again after 500 miles (or 15 hours) of operation.

1. If the fluid is cold, operate the transmission until a normal operating temperature is reached.
2. Loosen, but do not remove, the screw which secures the filter cover to the transmission pan (Fig. 15).
3. Carefully separate the filter cover from the pan at the bottom edge only. When the drainage is complete, remove the cover, retainer, and filter. Discard the filter and fluid.
4. Install a new filter. Install a new retainer seal ring, filter retainer, a new cover seal ring, cover and strap. Tighten the strap attaching screw (Fig. 15).
5. Slowly pour 9 quarts of automatic transmission fluid into the transmission. Apply the parking brake securely then start the engine.
6. With the hand throttle, set engine speed at idle speed rpm with the selector lever at N.
7. Check the transmission fluid level when the engine reaches normal operating temperature. If necessary, add fluid to bring the level to the ADD FLUID mark.
8. Continue to run the engine until the transmission fluid reaches normal operating temperature.
9. Apply the service brakes, and shift the transmission through all ranges.
10. With the engine running and the selector lever at N, check the fluid level. Add fluid, if necessary, to bring the level to the FULL mark. Approximately 13 quarts are required if the oil pan and control valve body have been removed. Total dry capacity for the transmission and cooling system is approximately 19 quarts.

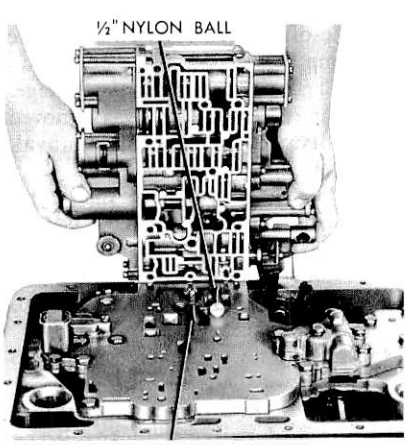

FIG. 11 Valve Body Removal and Installation

BUSHING OR BEARING

Removal and Installation

Replacement bushings are available for the converter pump cover, input shaft, converter stator support, high-splitter clutch housing, and output shaft. These bushings are pre-finished (no reaming required). Therefore the old bushing must be removed without damaging the bore, and the new bushing must be installed without damaging it.

Tools for removing and replacing the bushings are shown in Fig. 16. The bushing replacer tools should be used in a press. They are so designed that the

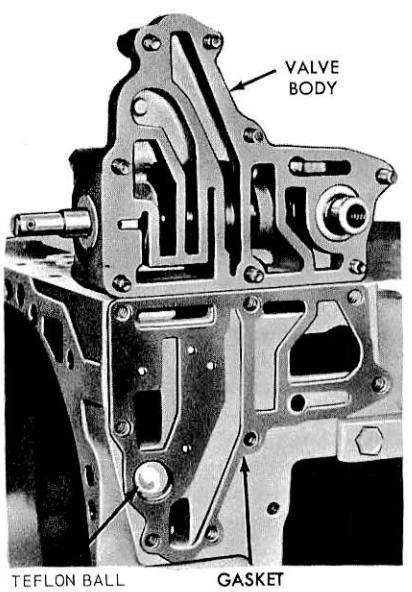

FIG. 12 Valve Retarder Removal and Installation

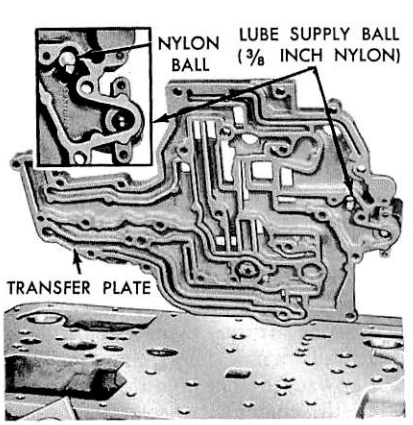

FIG. 13 Transfer Plate Installation

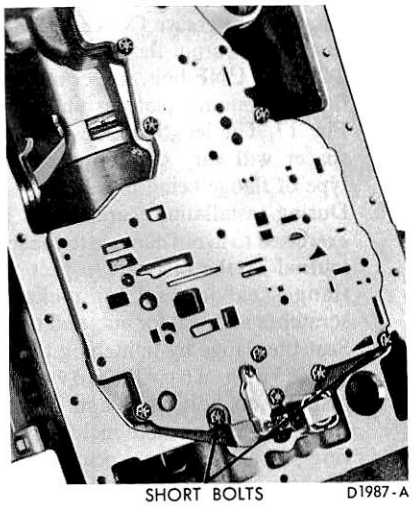

FIG. 14 Transfer Plate Bolts

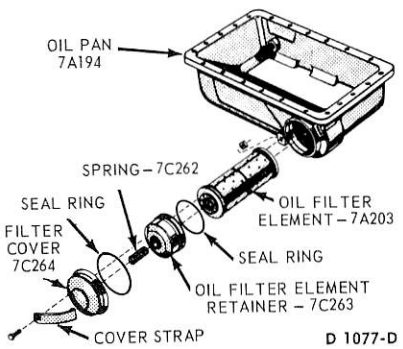

FIG. 15 Fluid Filter Assembly

bushings are properly located when the tool bottoms.

Wear limits for the various bushings are given in the specifications section.

SPEEDOMETER DRIVE GEAR

Removal and Installation

1. On a one-piece drive line, disconnect the shaft from the pinion flange and from the yoke at the parking brake drum. On a two-piece drive line, disconnect the coupling shaft from the yoke at the parking brake drum and then remove the center support bearing bracket. Move the forward end of the drive shaft out of the way.
2. Disconnect the speedometer cable from the rear of the transmission.
3. Loosen the two rear pitot tube mounting bolts until they protrude 1/16-inch. **To prevent damage to the pitot tube or governor oil collector ring, these bolts must be loosened before loosening the output flange attaching bolt.**
4. Straighten the output shaft flange tab lockwasher and remove the bolt, washer, and O-ring seal.
5. Remove the parking brake drum and output flange; use a suitable puller if necessary. **Do not turn the output shaft until the output shaft flange attaching bolt is reinstalled. Otherwise, damage to the pitot tube or governor vanes may result.**
6. **Using Tool 1175-AE with T50T-100-A, remove the output flange seal.**
7. Remove the internal snap ring.
8. Using Tool 1175-AE with T50T-100-A, remove the rear bearing.
9. Using needle nose pliers or a piece of wire, remove the speedometer drive gear. Install the speedometer drive gear. The counterbored end faces out.
10. Start the rear bearing straight into the bore of the retainer and, using Tool T57L-600-A, drive the bearing tight against the shoulder in the retainer.
11. Install the internal snap ring.
12. Coat the outside diameter of a new output flange seal with a very thin film of Permatex, and start the seal straight into the retainer with the lip of the seal toward the bearing. Using Tool T57L-600-A, press the seal into the bore until the rear of the seal is 3/4 inch beyond the extreme rear surface of the bearing retainer housing.
13. Install the output shaft flange and parking brake drum.
14. Install the O-ring seal, tab lock washer, and output shaft bolt. Torque the bolt to 10 ft-lbs. **Do not allow the shaft to rotate while tightening the bolt.**
15. Torque the rear pitot tube bolts to 8-10 ft-lbs.
16. Torque the output shaft flange bolt to 83-100 ft-lbs, and lock it by staking the tab lockwasher into the hole in the retainer and bending a tab against a flat of the bolt head.
17. Connect the speedometer cable to the rear of the transmission.
18. Connect the drive shaft or the coupling shaft and center support bearing bracket. Torque the nuts and/or bolts to specification.

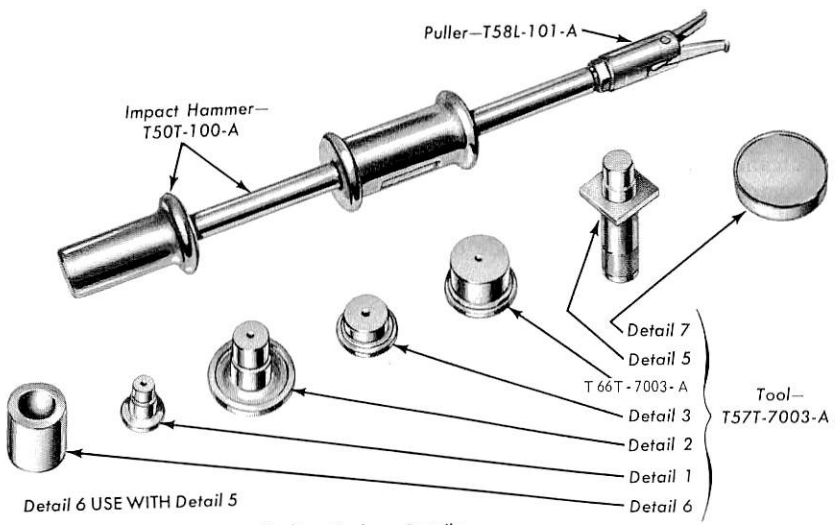

FIG. 16 Bushing Replacing Tools

UNIVERSAL JOINT FLANGE AND PARKING BRAKE DRUM

Removal and Installation

Before removing the parking brake drum, it is necessary to remove the universal joint flange.

1. The transmission may be placed in either a vertical or horizontal position on the input drive cover or sump pan. Remove flange attaching bolt, with washer and O-ring seal. Do not remove washer and O-ring from the bolt. Remove the flange.
2. Do not allow the output shaft to turn until the flange is installed, seated and the attaching bolt has been torqued. If the output shaft is allowed to rotate, damage to the pitot tube and/or governor will result.
3. Remove the parking brake drum

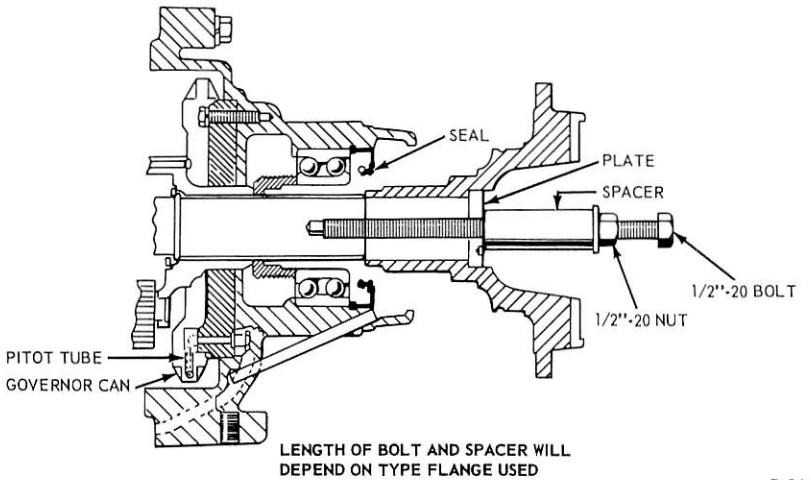

FIG. 17 Installing Output Shaft Flange

attaching bolts and remove the drum.
4. Position the drum and install the attaching bolts.
5. Torque the bolts to specification being careful not to rotate the output shaft.
6. Lubricate the output seal with a high temperature grease COAZ-19584.
7. Install the output flange, using a 1/2-20 inch UNF bolt, spacer nut and flange retaining plate as shown in Fig. 17. The length of the bolt and spacer will vary depending on the type of flange being installed.
8. During installation, care should be exercised to avoid damage to the seal journal or the oil seal. Inspect the flange seal journal for nicks or scratches and seal for cuts and tears.
9. Seat the flange by tightening the 1/2-20 inch nut. Remove the installation bolt, nut, and spacer. Install attaching bolt including O-ring seal and washer. Locate the tab of the washer opposite the hole in the flange retaining plate.
10. Prevent the output flange from rotating then torque the bolt to 83-100 ft-lbs. Bend the tab of the washer against a flat of the bolt head and stake the edge of the washer into the hole of the retaining plate.
11. Rotate flange by hand to check for binding or interference.

DISASSEMBLY AND ASSEMBLY

TRANSMISSION

1. Proper equipment must be available before disassembly is started. This equipment includes a suitable hoist of at least 1/2-ton capacity, proper hand tools and special tools, and a press.
2. Gaskets, lock wires, lock strips, and cotter pins should be discarded as they are removed. New parts of this type should always be installed.
3. Care must be used to avoid damage to transmission components during disassembly, cleaning, inspection, repair, and assembly operations. Nicks, and scratches caused by careless handling may cause fluid leakage or improper functioning and could result in transmission failure. All worn or damaged parts must be repaired or replaced. Where special torque requirements apply, refer to the specifications section.
4. Cleanliness is important in servicing the transmission. All components must be thoroughly cleaned and kept clean throughout the rebuild process. The presence of dirt can cause malfunction, and possible failure of the transmission.
5. Every component should be thoroughly cleaned after the transmission is disassembled. Cleaning is necessary to insure effective inspection for wear, damage, and serviceability of components.
6. Crocus cloth may be used to remove minor surface irregularities.
7. A soft wire (brass or copper) may be used to clean fluid passages. Always flush such passages thoroughly after cleaning.
8. If steam cleaning is used, dry the cleaned parts immediately with compressed air and apply a film of oil to prevent rusting. Never use lye or caustics which will corrode or etch metal surfaces.
9. Do not clean the lubricant from new bearings. Keep new bearings wrapped until they are to be installed. Soak bearings which have been in service, in dry cleaning solvent or mineral spirits paint thinner to loosen deposits of dirt. Do not spin the bearings during cleaning or drying. After cleaning, turn the bearings by hand and note any evidence of grit. Clean them if grit is present.

Disassembly

1. With the transmission assembly removed from the vehicle remove the fluid filter, oil pan, valve body, oil, transfer plate, and hydraulic retarder valve and gasket.
2. Remove the converter pump cover, lockup clutch reaction plate, and clutch plate (Fig. 18). Remove the seal ring from the reaction plate and pump.
3. Remove the hook-type seal ring and the snap ring from the turbine shaft, and remove the turbine from the shaft (Fig. 19).
4. Rotate the stator counterclockwise to lock it on the freewheel roller race. Then lift the stator and roller race off the converter pump

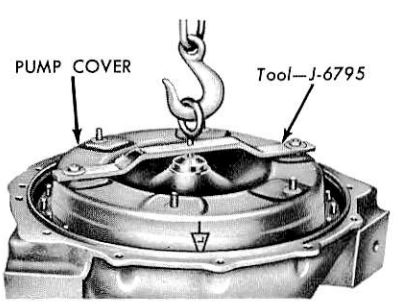

FIG. 18 Converter Pump Cover Removal

together. **Do not let the freewheel roller race drop out of the stator.**

5. Remove the snap ring and spacer from the converter stator support, and lift out the converter pump assembly.
6. Remove the converter housing mounting bolts and lift off the housing and gasket. **Lift the housing carefully to avoid dropping the retarder rotor and shaft assembly. If this assembly lifts with the housing, tap the end of the shaft to dislodge it from the housing so it will remain in the transmission.**
7. Remove the thrust bearing from the rear face of the converter stator support assembly. The bearing race may remain on the retarder rotor and shaft assembly.
8. Lift out the retarder rotor and shaft (Fig. 20). Remove the hook-type seal ring and thrust washer.
9. Remove the low-splitter clutch reaction plate anchor bolt. Loosen the bolt at the top of the transmission housing which anchors the diaphragm assembly in the housing.
10. Remove the low-splitter clutch reaction plate.
11. Remove the anchor bolts that hold the low-splitter piston housing and diaphragm assembly. Then install the lifting hook in the end of the splitter outshaft and remove the assembly (Fig. 21).
12. Position the transmission with the rear bearing retainer up.
13. Remove the two pitot tube bolts and the speedometer plug.
14. Remove the brake drum. Hold the output flange to prevent rotation and remove the flange retaining bolt, tab lock washer and the O-ring seal.
15. Use a suitable puller and remove the output shaft flange.
16. Remove four bolts and lift the brake assembly and apply lever from the transmission.
17. Remove the reverse, low, and intermediate range clutch reaction housing anchor bolt nuts. Remove the low-range piston housing anchor bolt and the intermediate-range piston housing anchor bolt. Remove the cap screws securing the rear bearing retainer to the transmission housing and remove the retainer and gasket. Lift out the loose pitot tube.
18. Remove the reverse planetary carrier and rear pitot collector ring from the output shaft. **Various factory installed clutch parts are color coded, and should be assembled in the same locations when the transmission is serviced to insure proper fitting. Parts marked yellow are for the intermediate range clutch, those marked green are for the low-range clutch, and those marked red are for the reverse clutch.** Replacement parts are not color coded.
19. Remove the thrust washer and snap ring from the output shaft and the snap ring from the reverse sun gear and the internal-splined thrust washer.
20. Remove the reverse clutch reaction housing, backing plate, clutch plate(s) and ring gear. Then take out the reverse clutch Belleville spring. Remove the reverse range reaction housing anchor bolt.
21. Working through the openings in the transmission housing, remove the low-range and reverse-range clutch piston housing.
22. Remove the low-range clutch Belleville spring.
23. Remove the low-range clutch apply plate and the low-range clutch plate(s).
24. Remove the low-range clutch

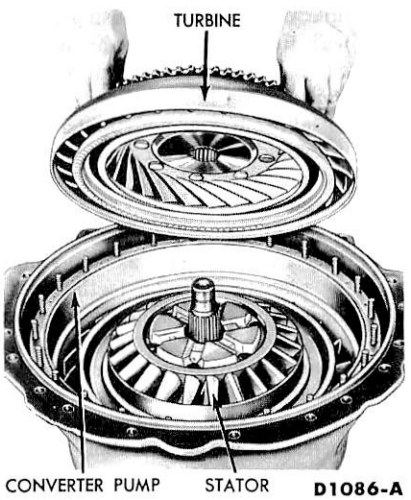

FIG. 19 Turbine Removal or Installations

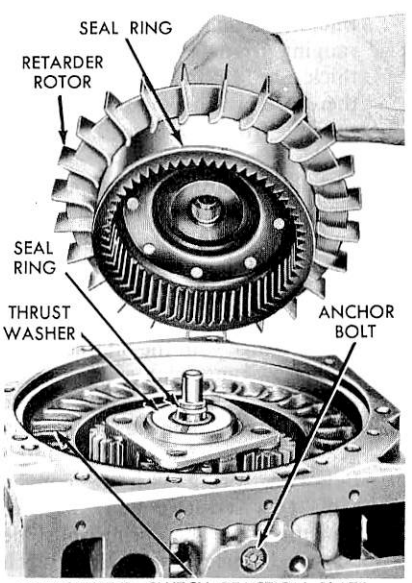

FIG. 20 Retarder Rotor Removal or Installation

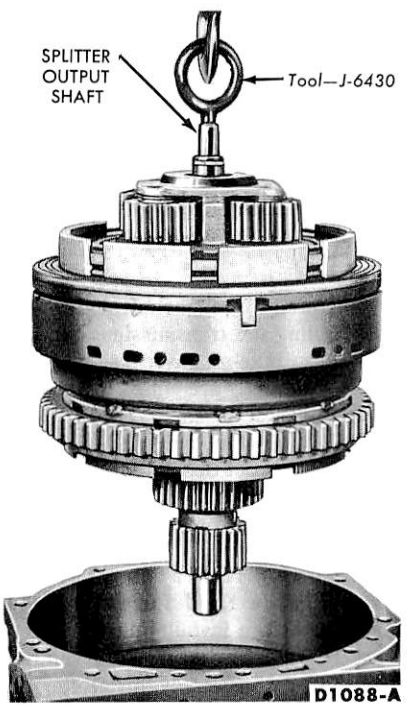

FIG. 21 Removing Splitter Mechanism

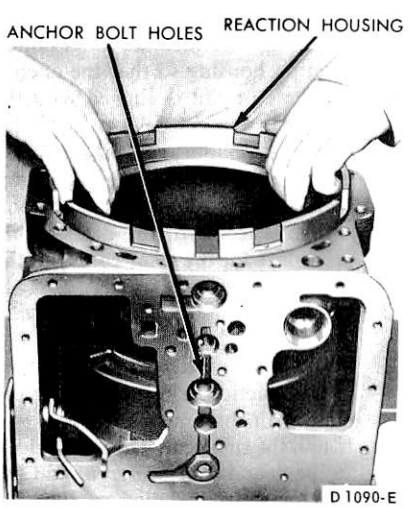

FIG. 22 Low-Range Clutch Reaction Housing Removal or Installation

reaction housing (Fig. 22).
25. Remove the low-range anchor bolt.
26. Remove the large internal snap ring that holds the reverse sun gear shaft to the low-range ring gear, then remove the reverse range sun gear shaft.
27. Remove the output shaft assembly.
28. Remove the low-range ring gear and intermediate-range planetary carrier (Fig. 23).
29. Remove the intermediate-range housing and piston assembly from the transmission housing.
30. Remove the intermediate-range clutch Belleville spring. Then remove the apply plate, the clutch plates, and ring gear.
31. Remove the intermediate clutch reaction housing from the transmission housing.
32. Remove the intermediate-range square head anchor bolt.
33. Remove the oil collector.

Assembly

Do not use gasket sealer when assembling the transmission, except on the power take-off cover (use sparingly). As mating parts are pulled together, the excess sealer is squeezed out of the splitline into the transmission. A very small amount of this material can affect the functioning of the various valves which control the operation of the transmission.

Soak all-clutch plates in transmission fluid for at least two minutes before installation.

1. If a housing shim was removed during disassembly, install the same shim. **If a new housing (case) is used, do not use the old shim.** Install the oil collector with the conical portion facing toward the front of the housing.
2. Install the intermediate-range clutch reaction housing so that the anchor bolt hole or slot is aligned with the hole in the bottom of the transmission housing. Install, but do not tighten the intermediate-range clutch reaction housing anchor bolt and nut. **Refer to the disassembly procedure for the color coding of the clutch components.**
3. Position an internal-splined plate in the reaction housing.
4. Position the externally splined plate in the reaction housing, mating the plate with the housing slots.
5. Install the ring gear. **The ring welded to the gear is not centered, and the gear must be installed so that the longer spline teeth engage the front clutch plate splines (Fig. 24).**
6. Position the other internally splined clutch plate, meshing the plate splines with the spline teeth of the ring gear.
7. Install the apply plate. The intermediate range apply plate is available in six thicknesses, ranging from 0.270 to 0.316 inch.
8. Install the intermediate-range clutch Belleville spring with the convex side toward the rear of the transmission. The spring must be entered perfectly on the clutch apply plate so that the intermediate-range piston housing will seat properly around it.
9. Install the intermediate-range piston housing with the piston facing the Belleville spring and with the tapped hole in the piston housing in line with the corresponding anchor bolt hole in the bottom of the transmission housing.
10. Install, but do not tighten, the intermediate-range clutch piston housing anchor bolt.
11. Install the low-range ring gear and intermediate-range planetary carrier (Fig. 23). Rotate the assembly until the planetary pinion teeth engage the internal teeth of the intermediate range ring gear.
12. Install the low-range clutch reaction housing, aligning the tapped hole or slot in the plate with its corresponding anchor bolt hole in the bottom of the transmission housing (Fig. 22). Install the reaction housing anchor bolt and nut. **Do not tighten.**
13. Install the clutch plate(s) and the clutch apply plate. The low-range apply plate is available in three thicknesses on MT30 and 31 models, ranging from 0.458 to 0.476 inch thick. On MT40, 41 and 42 models there are six thicknesses available, ranging from 0.270 to 0.316 inch thick.
14. Install the transmission output shaft assembly, engaging the planetary pinion teeth with the internal teeth of the low-range ring gear.
15. Install the reverse sun gear shaft over the output shaft. Mesh the teeth on the flange with the internal teeth of the low-range ring gear.
16. Install a new snap ring in the internal groove of the low-range ring gear, install the low-range clutch Belleville spring with the convex side toward the rear of the transmission. The spring must be centered perfectly on the clutch apply plate so that the low-range and reverse clutch piston housing will seat around it.
17. Install the low-range and reverse clutch piston housing assembly with the long (reverse) hub up, aligning the tapped hole (most models) in the piston housing with the corresponding anchor bolt hole in the bottom of the transmission housing. **Refer to the disassembly procedure for the correct color code.**

    Replacement parts are not color coded. Do not install the anchor bolt at this time.
18. Install the reverse clutch Belleville spring with the concave side toward the rear of the transmission. Depress the Belleville spring edge and install the square head anchor bolt from inside the transmission.
19. Before installing the reverse clutch pack in the housing, assemble it as follows:

    Place the clutch apply plate on a bench with the flat surface up. Position the reverse ring gear and clutch plate assembly on the apply plate with the longer section of the ring gear external teeth up. Over these parts, position the reverse reaction housing with the slots down so the slots engage the clutch apply plate tangs.

    Install this assembly in the transmission housing, aligning the tapped hole or slot in the reaction housing with the corresponding anchor bolt in the bottom of the transmission housing. **Do not install the anchor bolt at this time.**
20. Install the reverse sun gear splined thrust washer on the reverse sun gear shaft.

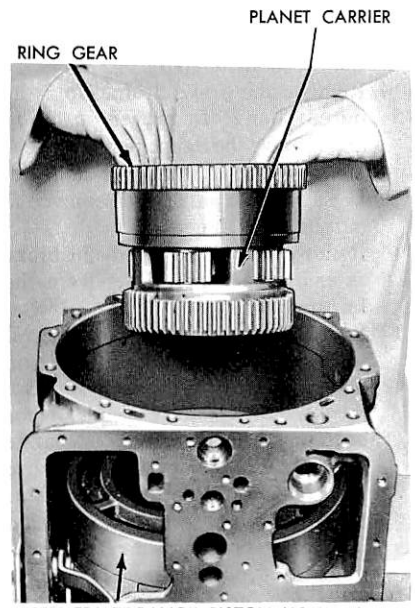

FIG. 23 Ring Gear and Planet Carrier Removal and Installation

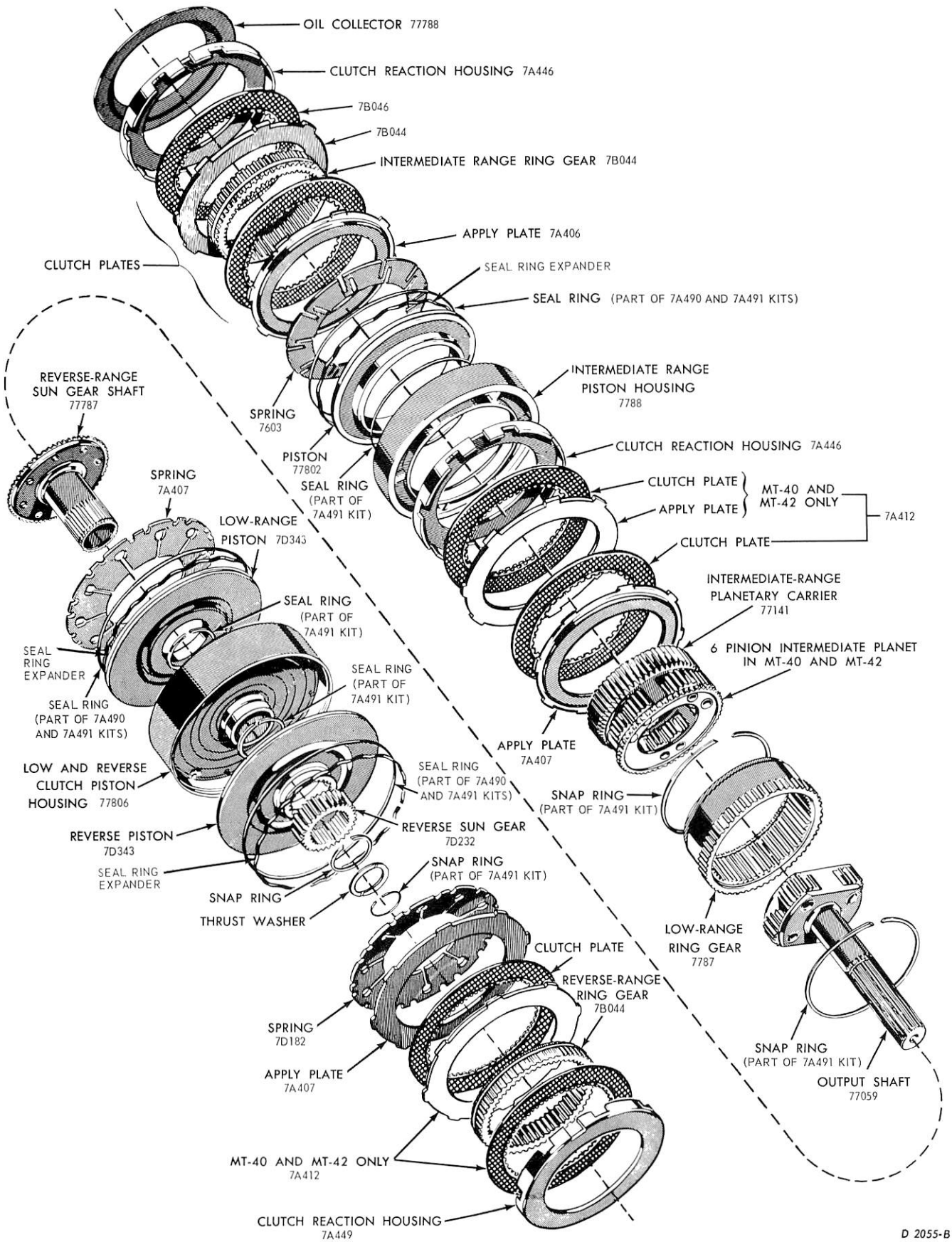

FIG. 24 Typical Range Clutches and Gears (Intermediate, Low and Reverse)

Install the reverse sun gear on the sun gear shaft, then install a new snap ring.

21. Install the bronze thrust washer over the output shaft. Install the reverse planetary carrier locating snap ring (wire) on the output shaft.
22. Install the reverse planetary carrier and the rear pitot collector ring on the output shaft. Make sure the planetary pinions mesh with the sun gear and internal teeth of the reverse ring gear.
23. With the rear pump (or adapter) and speedometer drive gear removed, install the rear bearing retainer, without a gasket, on the rear of the transmission housing.
24. Install four bearing retainer mounting bolts at 90 degree intervals, and torque the bolts to 85 in-lbs. This torque applies to gasket selection only. Draw the bearing retainer down evenly toward the transmission housing.
25. Check the clearance between the bearing retainer and the rear surface of the transmission housing near the points where the bolts are installed (Fig. 25). This clearance will determine which gasket or gaskets to use.

Gaskets are available in 0.012, 0.016, and 0.021 inch thickness. If the gaskets are not clearly marked, measure them with a micrometer. The gasket thickness for various clearances is given below:

Clearance of 0.005-0.015 inch, use the 0.012 gasket.

Clearance of 0.015-0.021 inch, use the 0.016 gasket.

Clearance of 0.022-0.027 inch, use the 0.021 gasket.

Clearance of 0.028-0.033 inch, use one 0.012 and one 0.016 gasket.

26. **Install, but do not tighten, the low-range and reverse clutch piston housing anchor bolt and the reverse clutch reaction housing anchor bolt.**
27. **Remove the four bearing retainer bolts and remove the bearing retainer.**
28. Torque the five anchor bolts installed in the bottom of the transmission housing to 10 ft-lbs. **This torque is temporary.**
29. Install the correct rear bearing retainer gasket. Install two guide bolts in the rear pitot tube. Make sure the open (drilled Port) side of the pitot tube is toward the bolts. To make a guide bolt, thread one end of a 6-inch long by 1/4-inch diameter brazing rod. Use a 1/4-inch-28 die and thread a distance of 3/8-inch. Round off the unthreaded end.

Guide bolts are recommended. If guide bolts are not available, install the pitot tube as follows exercising extreme care as the tube threads are soft aluminum:

Place the pitot tube on the mounting pad of the rear pump body. Using a pair of side-cutting pliers, crimp two or three threads near the end of a soft 1/4-28 bolt. Insert the crimped thread through the rear of the bearing retainer and screw it into the pitot tube until it binds enough to control the movement of the pitot tube. Swing the pitot tube toward the center of the bearing retainer so that it will clear the pitot collector ring when the retainer is installed, then install the retainer. Turn the pitot tube to its normal position and start a mounting bolt. Pull the pitot tube tight and remove the crimped installation bolt. Install the other pitot mounting bolt. Leave 1/16-inch or more of the mounting bolts protruding at the rear of the retainer.

30. Place the pitot tube in the rear pitot collector ring with the tube portion toward the vanes and the guide bolts toward the rear of the transmission (Fig. 26).
31. Carefully lower the rear bearing retainer over the output shaft while guiding the ends of the guide bolts through the pitot tube mounting bolt holes in the retainer. It also will be necessary to guide the rear pump drive lugs into the driving slots in the reverse planetary carrier and to start the speedometer drive gear on the output shaft. Do not remove the pitot tube guide bolts at this time. Do not turn the output shaft until the output flange (retaining) attaching bolt is installed. Otherwise, damage to the pitot tube or governor vanes may result.
32. Install the rear bearing retainer bolts and lock washers. At this time, tighten the piston housing anchor bolts 3-10 ft-lbs torque to seat the housings firmly. Then torque the retainer bolts to 42-50 ft-lbs.
33. Tighten the three low-and intermediate range and reverse clutch reaction housing anchor bolts to 35-40 ft-lbs. Tighten the nuts to 65-75 ft-lbs. Be sure to use new nuts only. The old nuts are not reusable.
34. Torque the two piston housing anchor bolts to 20-23 ft-lbs.
35. While pulling outward on one pitot tube guide bolt, replace the other guide bolt with a mounting bolt, replace the second guide bolt in the same way. Do not tighten the mounting bolts at this time. The mounting bolts should protrude 1/16-inch or more.
36. Install the brake support plate assembly on the bearing retainer and at the same time, install the brake apply lever and cam (Fig. 27). Tighten the bolts to 67-80 ft-lbs torque.

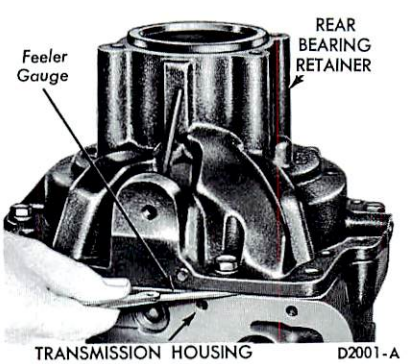

FIG. 25 Rear Bearing Retainer Gasket Measurement

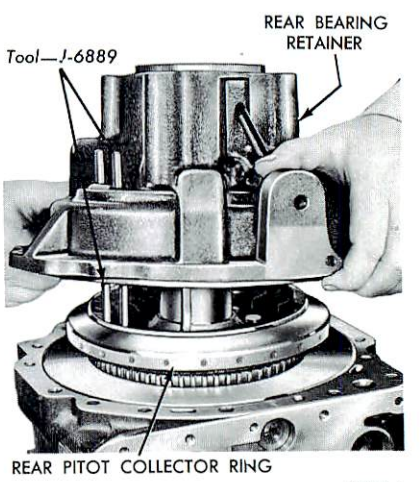

FIG. 26 Rear Bearing and Pitot Tube Installation

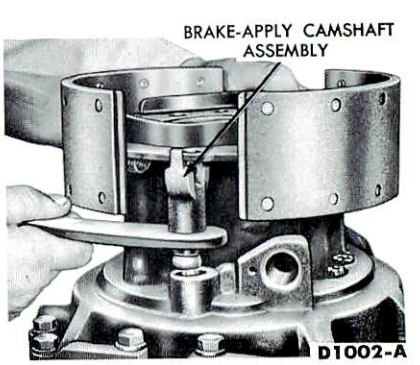

FIG. 27 Parking Brake Installation

37. Install the output shaft flange and parking brake drum. Do not turn the output shaft while installing the flange and drum. If the shaft is turned, damage to the pitot tube or governor may result.
38. Install the O-ring seal, tab lock washer, and output shaft bolt. Torque the bolt to 10 ft-lbs. Do not allow the shaft to rotate while tightening the bolt.
39. Torque the rear-pitot tube bolts to 8-10 ft-lbs.
40. Torque the output shaft flange bolt to 83-100 ft-lbs and lock it by staking the tab lock washer into the hole in the retainer and bending a tab against a flat of the bolt head.
41. Adjust the parking brake.
42. Position the transmission with the front surface facing upward.
43. Install the lifting hook in the front end of the splitter output shaft and install the splitter section and high range clutch assembly (Fig. 21). The three anchor bolt holes in the high-range clutch diaphragm assembly must align with the two holes in the bottom of the transmission and one hole in the top of the housing.
44. Start all three anchor bolts. On the top bolt (Fig. 28), leave approximately 1/8-inch gap between the bolt head and the transmission housing. Using a speed wrench, tighten bolt A. Loosen the bolt, then pull it up snug.
45. Tighten bolt B to 20-23 ft-lbs torque.
46. Tighten bolt A to 20-23 ft-lbs torque.
47. If the top bolt is finger loose, tighten it to 20-23 ft-lbs torque. If it is not finger loose, loosen bolts A and B and re-torque reversing the torque sequence. The top bolt should be torqued to 20-23 ft-lbs only if it is finger loose. Failure to tighten the bolts in the order described, may cause internal fluid leaks, resulting in low pressures and erratic shifts.
48. Install the low-splitter clutch reaction plate with the vanes toward the front of the housing and the anchor bolt hole in line with the hole in the bottom of the housing.
49. Install the reaction plate anchor bolt and torque it to 20-23 ft-lbs.
50. Install the hook-type seal ring around the splitter ring gear of the turbine shaft and hydraulic retarder rotor (Fig. 20).
51. Make sure that the thrust washer is in front of the splitter planetary carrier assembly and that the hook-type seal ring is in the groove at the front of the splitter output shaft assembly (Fig. 20). Oil the thrust washer and the hook-type seal ring then install the turbine shaft and hydraulic retarder rotor assembly. Be careful to avoid damaging the hook-type seal ring at the front of the splitter output shaft.
52. Position the converter housing gasket on the front of the transmission housing.
53. Install the needle roller bearing and needle bearing assembly. Be sure the rollers in the assembly are facing down. Then install the converter housing on the transmission housing assembly and secure it with the 10 mounting bolts and lock washers. Torque the bolts to 42-50 ft-lbs.
54. Install the hook-type seal ring on the converter pump hub.
55. Install the converter pump in the converter housing. Make sure the flats on the hub mate with the front pump drive flats and that the hook-type seal ring on the hub passes through the front pump seal without damage to the seal ring or seal.
56. Install the splined spacer and the snap ring which retains it.
57. Hold the freewheel roller race in the stator, and install the stator on the stator support as shown in Fig. 29. The stator should rotate freely in the direction of engine rotation (clockwise) and should lock up when rotated in the other direction.
58. Install the torque converter turbine on the turbine shaft (Fig. 30).
59. Install the snap ring and hook-type seal ring on the turbine shaft (Fig. 30).
60. Install a polyacrylate seal ring in the groove just inside the bolt circle in the converter pump and a second ring on the front of the lockup clutch reaction plate. Be sure the seal is in place inside the groove of the converter pump and plate so they cannot squeeze out during cover assembly.
61. Install the reaction plate (Fig. 30). **If inked balance marks are found on the reaction plate, converter pump, lockup piston and pump cover, assemble and parts with the marks aligned.**
62. **Install the lockup clutch plate on the reaction plate with internal teeth engaging the turbine splined ring. The clutch plate should be soaked in transmission fluid for at least two minutes before installation.**
63. Install the converter pump cover assembly on the converter pump studs. If balance marks are on the cover and pump, align the balance marks (Fig. 31). Install four nuts at 90 degree intervals and torque alternately to 10 ft-lbs to prevent the polyacrylate seals from being forced out of their grooves. Install the remaining nuts and torque all nuts to 19-23 ft-lbs.
64. If any of the parts listed below are replaced during transmission assembly, the dimension A in Fig. 32 must check.

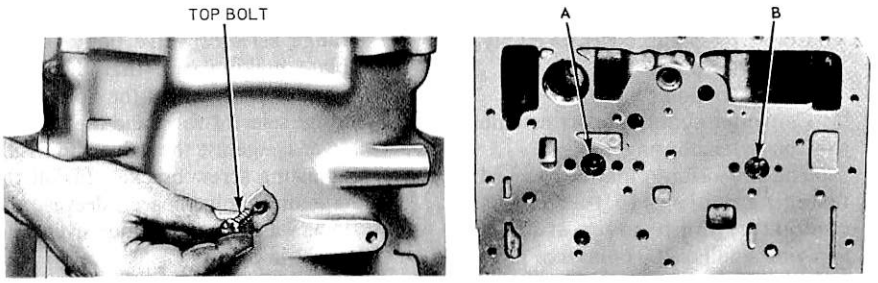

FIG. 28 Diaphragm Bolts—Tightening Sequence

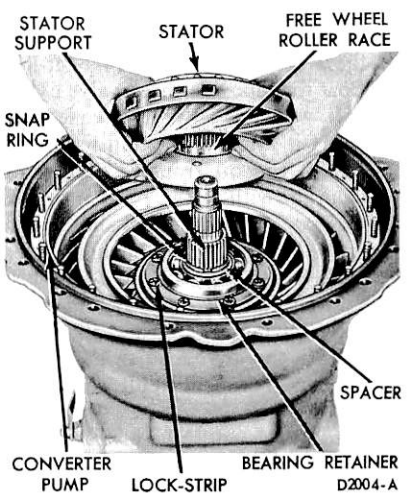

FIG. 29 Converter Stator Installation

Parts replacement which may affect the dimension A are:

Converter pump cover assembly
Converter pump
Converter pump hub
Converter stator support assembly
Converter housing

The dimension A may be checked by fastening a sling to two opposite converter pump cover studs and applying a pull of 100 pounds or more to remove all end play. Do not **lift** the transmission with these studs. While the pull is applied, measure the distance A as shown in Fig. 32. If the dimension is not within 1.572-1.592 inches, remove the spacer retainer(s) and install or remove converter stack control spacers at the pump cover studs as needed. In determining the spacers required, be sure to include the spacer retainer flat thickness (0.015-0.018 inch). The correct dimension should be established at each of the six stud positions. The spacers are serviced as follows:

Thickness Color Code
0.027-0.029 inch Gold
0.045-0.047 inch Silver
0.063-0.065 inch Copper
0.081-0.083 inch Black
0.099-0.101 inch Plain

After the correct spacers have been installed or removed install the spacer retainer(s).

65. If a new control valve body is being installed, the closed throttle stop must be adjusted following the procedures given under Adjustments.
66. Insert the hydraulic retarder valve teflon ball in the transmission housing, install a new gasket on the transmission housing, and then install the hydraulic retarder control valve body assembly install three long (2 1/4-inch) and five short (1 1/4-inch) mounting bolts. Torque the 1 1/4-inch bolts to 15-18 ft-lbs and the 2 1/4-inch bolts to 14-17 ft-lbs.
67. Coat the lube line check valve nylon ball with oil-soluble grease and insert it into the oil transfer plate. Install the oil transfer plate and secure it with the 10 bolts and lock washers. Install the two short bolts at the thin section of the oil transfer plate. Torque the bolts to 8-10 ft-lbs.
68. Position the downshift timing valve body on the oil transfer plate and install the three bolts and lock washers. Torque the bolts to 8-10 ft-lbs.
69. Place the detent shift valve spring in the oil transfer plate and the 3/8-inch diameter steel ball and the 1/2-inch diameter rear pump cut-off valve nylon ball in the range selector valve body. Hold the balls in place with oil-soluble grease. Position the range selector valve body on the plate making sure that the range selector shaft enters the hole in the range selector valve and that the TV lever is against the valve and inside adjusting screw bracket. Install the attaching bolts, spacer sleeves, and lock washers and torque evenly to 48-72 in-lbs.
70. Place a new seal ring on the long tube end of the filter can and install the assembly over the control valve body. Install the attaching bolts. Torque the 3 3/4-inch bolt, located near the end of the long tube, to 4-6 ft-lbs. Torque the remaining two bolts to 8-10 ft-lbs.
71. Install a new oil pan gasket on the transmission housing with the bolt holes properly aligned.
72. If the pan is damaged, replace it.
73. Install the oil pan on the housing. Install the self locking oil pan bolts and torque to 15-18 ft-lbs.
74. Install a new fluid filter element in the oil pan and install the fluid filter retainer and seal ring, a new cover seal ring, and the cover.
75. Remove the transmission from the repair stand and install the covers and gaskets on the power take-off openings. Install the cover bolts and torque them to 15-20 ft-lbs.

CONTROL VALVE BODY

Disassembly

1. Place the control valve body on the bench, flat side down.
2. Remove the screw (68) which retains the signal tube clip (127) (Figs. 33 and 34). Remove the clip and replace the screw finger tight. Remove the screws (88) and (24) that retain the drive and high transfer tube clips (10) and (13).
3. Remove the signal tube (126) and transfer tubes (11) and (12) with the clips attached. Do not remove the clips from tubes (11) and (12).
4. Remove two screws (77) that retain the exhaust regulator valve body (63) to the control valve body (102). Remove the exhaust regulator valve body.
5. Remove the selector valve detent spring (100) and lift the valve body separator plate (97) off the control valve body (102). Remove the 3/8 inch steel detent ball (101) from the valve body.
6. Remove three screws (52) that attach the accelerator plug cover (48). Some models use a bracket (51), spring (50) and ball (49),

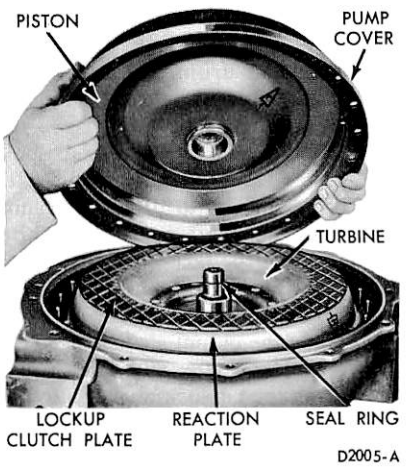

FIG. 30 Converter Pump Cover Installation

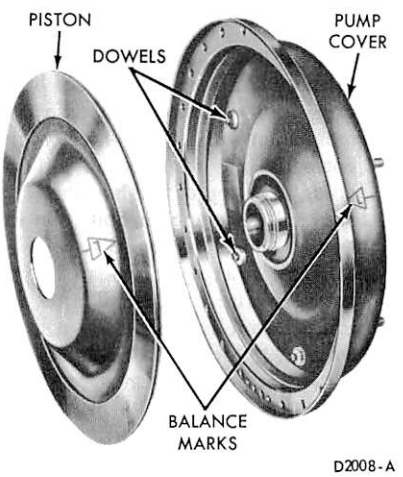

FIG. 31 Lockup Clutch Piston and Converter Pump Cover Balance Marks and Dowels

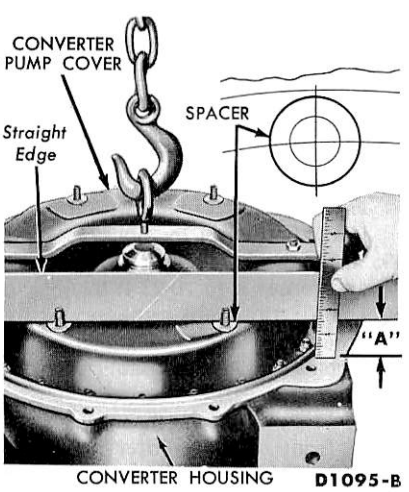

FIG. 32 Converter Slack Control Spacer Measurement

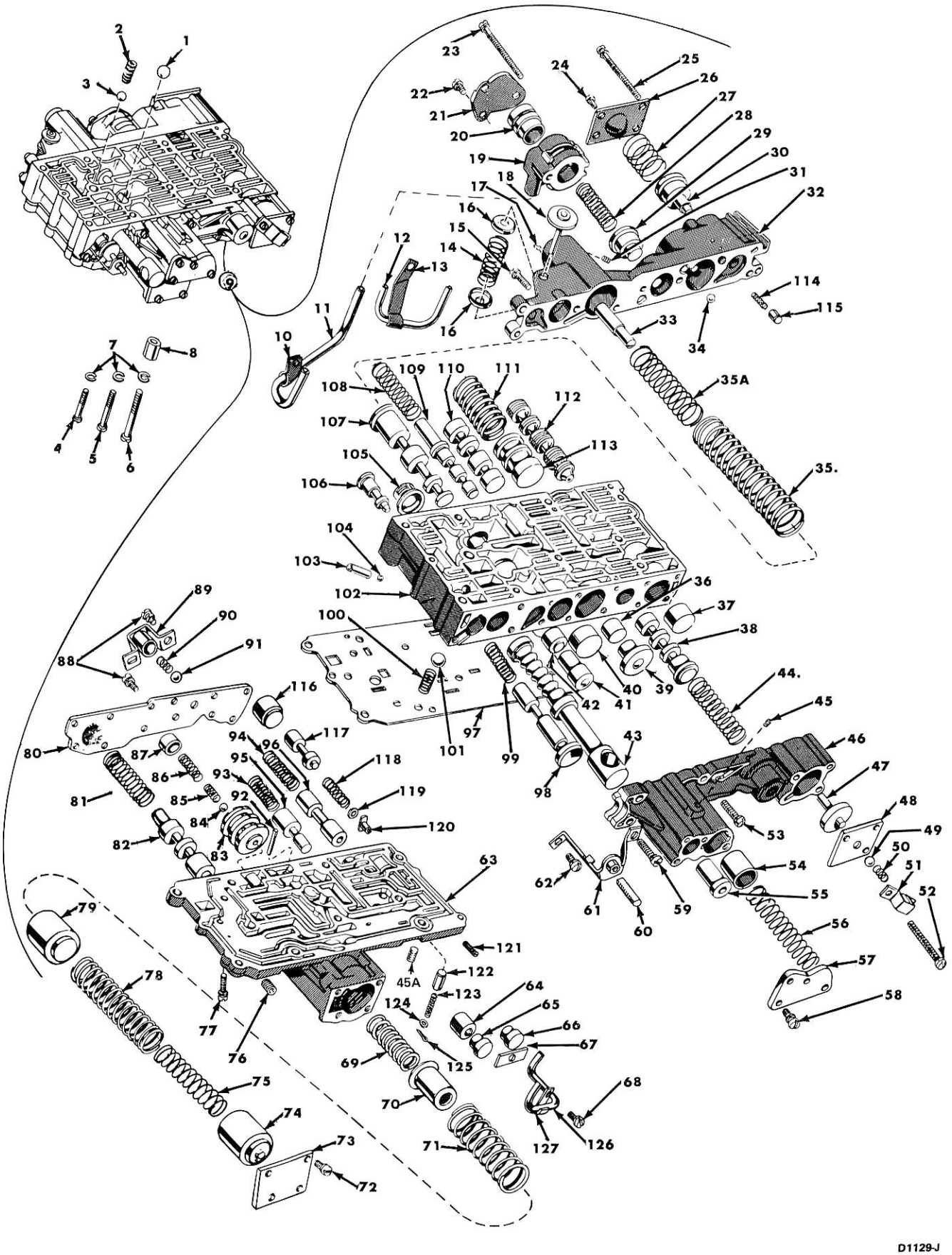

FIG. 33 Control Valve—Disassembled

CONTROL VALVE COMPONENT IDENTIFICATION

1. NYLON BALL, 1/2
2. SHIFT VALVE DETENT SPRING
3. SHIFT VALVE DETENT BALL
4. BOLT, 1/4-20 X 2-3/4
5. BOLT, 1/4-20 X 3-1/4
6. BOLT, 1/4-20 X 3-3/4
7. LOCK WASHER, 1/4
8. VALVE BODY BOLT SLEEVE
9. CONTROL VALVE BODY ASSY
10. DRIVE TRANSFER TUBE CLIP
11. DRIVE TRANSFER TUBE
12. HIGH TRANSFER TUBE
13. HIGH TRANSFER TUBE CLIP
14. PUMP OVERAGE REGULATOR SPRING
15. SCREW AND WASHER, 10-24 X 3/4
16. REGULATOR SPRING RETAINER
17. RETAINER SPRING
18. PUMP OVERAGE REGULATOR VALVE ASSY
19. OVERCONTROL VALVE BODY
20. OVERCONTROL VALVE
21. OVERCONTROL VALVE COVER
22. SCREW AND WASHER, 10-24 X 7/16
23. SCREW AND WASHER, 10-24 X 2-3/8
24. SCREW AND WASHER, 10-24 X 7/16
25. SCREW AND WASHER, 10-24 X 2-3/8
26. INTERMEDIATE-TO-HIGH SHIFT VALVE COVER
27. INTERMEDIATE-TO-HIGH SHIFT VALVE SPRING
28. SPLITTER SHIFT PLUG SPRING
29. SPLITTER SHIFT PLUG
30. INTERMEDIATE-TO-HIGH BLOCKER PLUG
31. OVAL POINT SETSCREW, 10-24
32. VALVE BODY FRONT COVER
33. THROTTLE VALVE PLUG
34. NYLON BALL, 1/4
35. MAIN-PRESSURE REGULATOR VALVE SPRING (PRIMARY)

35A. MAIN-PRESSURE REGULATOR VALVE SPRING (SECONDARY)

36. FRONT SPLITTER SHIFT (G10) PLUG
37. INTERMEDIATE-TO-HIGH SHIFT PLUG
38. LOW-TO-INTERMEDIATE SHIFT VALVE
39. REAR-SPLITTER SHIFT (G2) PLUG
40. LOCKUP PLUG
41. REGULATOR PLUG
42. HYDRAULIC RETARDER REGULATOR PLUG
43. MANUAL SELECTOR VALVE
44. INTERMEDIATE-TO-LOW SHIFT VALVE SPRING
45. OVAL POINT SETSCREW, 10-24

45A. OVAL POINT SETSCREW, 10-24

46. VALVE BODY REAR COVER
47. ACCELERATOR PLUG
48. ACCELERATOR PLUG COVER
49. BALL
50. TRIMMER BALL REGULATOR SPRING
51. VALVE GUIDE BRACKET ASSY
52. SCREW AND WASHER, 10-24 X 1-5/8
53. SCREW AND WASHER, 10-24 X 3/4
54. ACCUMULATOR VALVE
55. LOCKUP KNOCKDOWN PLUG
56. ACCUMULATOR VALVE SPRING
57. REGULATOR COVER
58. SCREW AND WASHER, 10-24 X 7/16
59. SCREW AND WASHER, 10-24 X 3/4
60. THROTTLE VALVE ADJUSTING SCREW
61. THROTTLE VALVE RETAINER
62. SCREW AND WASHER, 10-24 X 3/8
63. EXHAUST REGULATOR VALVE BODY
64. LOW-SPLITTER EXHAUST REGULATOR PLUG
65. LOW-SPLITTER EXHAUST REGULATOR STOP PLUG
66. INTERMEDIATE-EXHAUST REGULATOR STOP PLUG
67. PLUG RETAINER
68. SCREW AND WASHER, 10-24 X 7/16
69. TRIMMER SECONDARY SPRING
70. TRIMMER STOP
71. TRIMMER PRIMARY SPRING
72. SCREW AND WASHER, 10-24 X 7/16
73. TRIMMER COVER
74. TRIMMER VALVE
75. TRIMMER RETURN INNER SPRING
76. PIPE PLUG, 1/4
77. SCREW AND WASHER, 10-24 X 3/4
78. TRIMMER RETURN OUTER SPRING
79. TRIMMER PLUG
80. EXHAUST REGULATOR VALVE COVER
81. LOCKUP CUTOFF VALVE SPRING
82. LOCKUP CUTOFF VALVE
83. EXTENDER VALVE BODY
84. EXTENDER VALVE BALL
85. EXTENDER VALVE BALL SPRING
86. EXTENDER VALVE RETURN SPRING
87. EXTENDER VALVE
88. SCREW AND WASHER, 10-24 X 7/16
89. VALVE GUIDE BRACKET ASSY
90. TRIMMER BALL REGULATOR SPRING
91. BALL
92. EXTENDER VALVE BODY ROLL PIN
93. LOW-SPLITTER EXHAUST REGULATOR VALVE SPRING
94. INTERMEDIATE EXHAUST REGULATOR VALVE SPRING
95. LOW-SPLITTER EXHAUST REGULATOR VALVE
96. INTERMEDIATE EXHAUST REGULATOR VALVE
97. VALVE BODY SEPARATOR PLATE
98. THROTTLE VALVE
99. THROTTLE VALVE (TV) SPRING
100. SELECTOR VALVE DETENT SPRING
101. SELECTOR VALVE DETENT BALL
102. CONTROL VALVE BODY
103. REVERSE LOCKUP INHIBITOR CHECK VALVE RETAINER
104. NYLON BALL, 7/32
105. REVERSE-RANGE CLUTCH EXHAUST REGULATOR VALVE ASSY
106. THROTTLE REGULATOR VALVE
107. MAIN-PRESSURE REGULATOR VALVE
108. LOCKUP SHIFT VALVE SPRING
109. LOCKUP SHIFT VALVE
110. SPLITTER SHIFT VALVE
111. SPLITTER RELAY VALVE SPRING
112. INTERMEDIATE-TO-HIGH SHIFT VALVE
113. SPLITTER RELAY VALVE
114. 6-5 INHIBITOR SPRING
115. 6-5 INHIBITOR VALVE
116. LOW INHIBITOR PLUG
117. LOW INHIBITOR VALVE
118. 3-2 INHIBITOR SPRING
119. INHIBITOR SPRING RETAINER
120. TEE NUT
121. INHIBITOR SPRING ADJUSTING SCREW
122. 5-4 INHIBITOR VALVE
123. 5-4 INHIBITOR SPRING
124. SPRING RETAINER WASHER
125. COTTER PIN
126. SIGNAL TUBE
127. SIGNAL TUBE CLIP

D1129-H

FIG. 34 Control Valve—Legend

retained by two screws (52). If the valve body has these parts, remove them. Remove the accelerator plug cover and the accelerator plug (47).

7. Remove the four screws (58) from the regulator cover (57) and remove the cover, lockup knockdown plug (55), accumulator valve spring (56) and the accumulator valve (54).
8. Remove the two screws (59) and (62), and remove the throttle valve retainer (61) from the valve body. **Do not turn or remove the screw (60) from the retainer.** The screw (62) is 3/8 inch long and should not be mixed with 7/16-inch screws. Keep the screw (62) separated from the longer screws to insure that they are installed in the proper locations when the valve body is reassembled.
9. The valve body rear cover is spring-loaded and must be held while the screws are being removed. Remove the remaining three screws (53) that attach the valve body rear cover (46) to the valve body, and remove the rear cover.
10. Remove the intermediate shift valve spring (44), which is exposed when the rear cover is removed.
11. Remove the regulator plug (41) from the rear cover.
12. Remove the throttle valve (98) and spring (99) from the control valve body (102).
13. Remove the manual selector valve (43) from the rear of the control valve body.
14. From the same side of the control valve body, remove the hydraulic retarder regulator plug (42), lockup plug (40), rear pitot (G2) plug (39) and front pitot (G1) splitter plug (36), low-to-intermediate shift valve (38) and the intermediate-to-high shift plug (37).
15. Position the control valve body (102) on the rear surface and remove the two screws (23) that attach the splitter over control valve body (19) to the valve body front cover (32). Remove the splitter over control valve body.
16. Remove the screw (22) that attaches the over control valve cover (21) to the over control valve body. Remove the cover and the splitter over control valve (20) from the body.
17. Remove the splitter shift plug spring (28) and the splitter shift plug (29), which are exposed upon removal of the over control valve body (19) from the front cover (32) (Fig. 33).
18. Remove the three screws (24) and (25) which attach the intermediate-to-high shift valve cover (26) to the valve body front cover (32). Remove the cover (26), intermediate-to-high shift valve spring (27) and intermediate-to-high blocker plug (30).
19. Hold the valve body front cover against the spring pressure and remove the three attaching screws (15). Remove the front cover (32) from the valve body.
20. Remove the 1/4-inch nylon ball (34) that is loose when the front cover is removed. Remove the inhibitor valve (115) and the spring (114) from the cover (32). Remove the main-pressure regulator spring (35) (and secondary spring 35A, used in some models), splitter relay valve spring (111) and lockup shift valve spring (108).
21. Remove the throttle valve plug (33) from the valve body front cover (32).
22. Remove the retainer spring (17) and remove the pump overage valve (18) from the front cover.
23. Remove the two pump overage regulator valve spring retainers (16) and spring (14) from the front cover.
24. Remove the throttle regulator valve, (106), main-pressure regulator valve, (107), lockup shift (109), splitter shift valve, (110), splitter relay valve (113) and intermediate-to-high shift valve (112) from the front of the control valve body (102).
25. Do not remove the reverse-range clutch exhaust pressure regulator valve (105) unless replacement is necessary. Check the operation of the valve while cleaning the valve body. The valve should retain solvent on the side opposite the spring for 15 seconds. If the solvent leaks through sooner, replace the valve.
26. Do not remove the reverse lock-up inhibitor check valve retainer (103) and the 7/32-inch nylon ball (104). If the retainer, the ball or valve body (102) is worn or damaged, all three items must be replaced.
27. On a model which includes a valve guide bracket (89), remove two screws (88), bracket (89), spring (90), and ball (91). Remove the remaining nine screws (88) which attach the exhaust regulator valve body cover (80) to the exhaust regulator valve body (63). Remove the cover. The cover is spring loaded and must be held while the screws are being removed.
28. On a model which does not include the valve guide bracket (89), remove ten screws (88) and one screw (88A). Remove the cover (80). One screw (88A) is shorter, separate it from the longer screws to insure proper installation.
29. Removal of the cover will expose the intermediate exhaust regulator valve spring (94), low-splitter valve spring (93) and lockup cutoff valve spring (81). Remove these springs from the exhaust regulator valve body.
30. Remove the inhibitor plug (116), inhibitor valve (117), inhibitor spring (118), inhibitor spring retainer (119), nut (120) and screw (121). Do not remove the inhibitor spring adjusting screw (121) from the nut. Also, remove the intermediate exhaust regulator valve (96), lockup cutoff valve (82), and low-splitter exhaust regulator valve (95).
31. Remove the extender valve (87), extender valve spring (86), extender valve ball spring (85), and extender valve ball (84). Do not remove the extender valve body (83) and roll pin (92) unless replacement is necessary. Check the operation of the valve while cleaning the extender valve. If replacement is necessary, remove the roll pin and tap out the extender valve body toward the nearest opening (front) of the exhaust regulator valve body (63).
32. Remove the four screws (72) from the trimmer cover (73) and remove the cover from the rear of the exhaust regulator valve body (63) (Fig. 35). **The cover is spring loaded and must be held while the screws are being removed.**
33. Remove the trimmer valve (74), trimmer valve inner (75) and outer (78) springs, trimmer plug (79), trimmer primary spring (71), trimmer stop (70) and trimmer secondary spring (69) from the exhaust regulator valve body (63).
34. Remove the screw (68) retainer (67) and remove low-splitter exhaust regulator stop plug (65) and low splitter exhaust regulator plug (64) (Fig. 35). A model using a set screw (45A) at bottom of the valve body (63) does not use a regulator plug (64). Remove the intermediate exhaust regulator stop plug (66) from the rear of the exhaust regulator valve body (63).
35. Do not remove the pipe plug (76) from the valve body except for inspections or cleaning.
36. Remove the cotter pin (125), flat washer (124), inhibitor spring (123), inhibitor valve (122) from bottom of the body (63).
37. All the valve body parts should be thoroughly cleaned in cleaning solvent and dried with compressed air. All passages must be completely free of dirt and obstructions. Use a soft bristle brush. **Do not use abrasives or scraping tools.** After

cleaning, place the parts on clean paper and cover with paper to keep the dust out.

38. Inspect all the parts closely for wear, breaks, cracks, burrs, and dirt. Burrs may be removed with a soft abrasive stone. **Do not destroy the sharp edges of valves. The valves are designed with sharp edges to prevent them from sticking in their bores.**
39. Inspect all the springs and check them for free length. Correct performance of the transmission depends upon the good condition of springs. **Refer to specifications section for valve body spring identification and specifications.**
40. Before assembly, try all the valves in their bores. When parts are clean and dry, the valves should move in their bores by their weight only. Do not force them into the bores.
41. Reclean the parts, if necessary after inspection. Lubricate the parts with specified fluid.

Assembly

1. Install the intermediate exhaust regulator stop plug (66), small diameter first, in the exhaust regulator valve body (63), (Fig. 35).
2. Install the low splitter exhaust regulator plug (64).

Some models do not use a plug in this location. Such models are identified by the presence of a socket-head set screw (45A).

3. Install the low splitter exhaust regulator stop plug (65), small diameter first.
4. Install the plug retainer (67) and screw (68) finger tight.
5. Install the trimmer secondary spring (69), trimmer stop (70), trimmer primary spring (71) and plug (79).
6. Install the trimmer return inner and outer springs (75) and (78) and trimmer valve (74).
7. Install the trimmer cover (73) and four screws (72). Torque the screws to 24-36 in-lbs.
8. If the pipe plug (76) was removed, reinstall.
9. Install the inhibitor valve (122), inhibitor spring (123), flat washer (124) and new cotter pin (125) in the bottom of the exhaust regulator body (63).
10. If the extender valve body (Fig. 36)

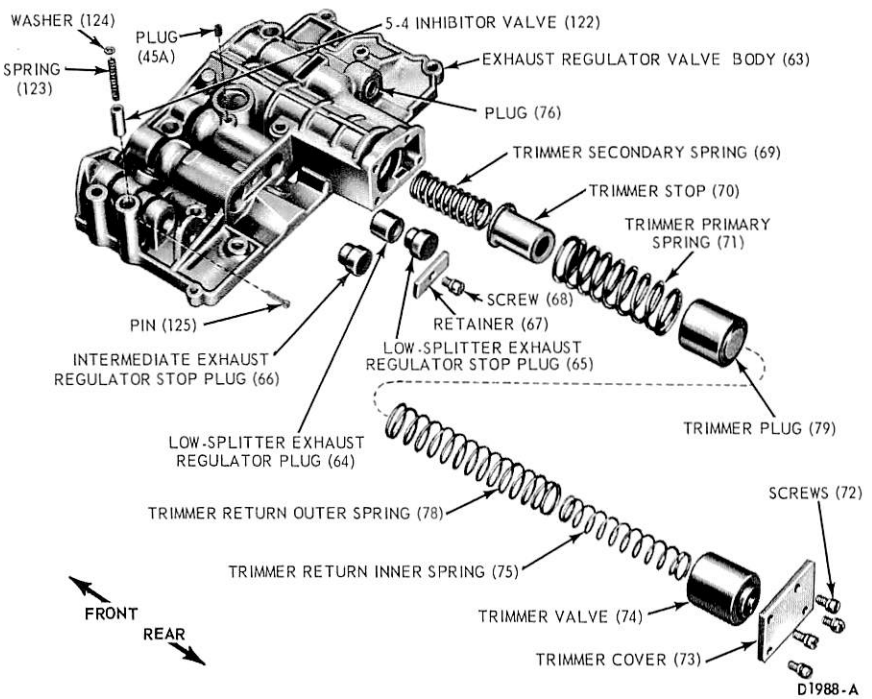

FIG. 35 Exhaust Regulator Valve Body—Rear View

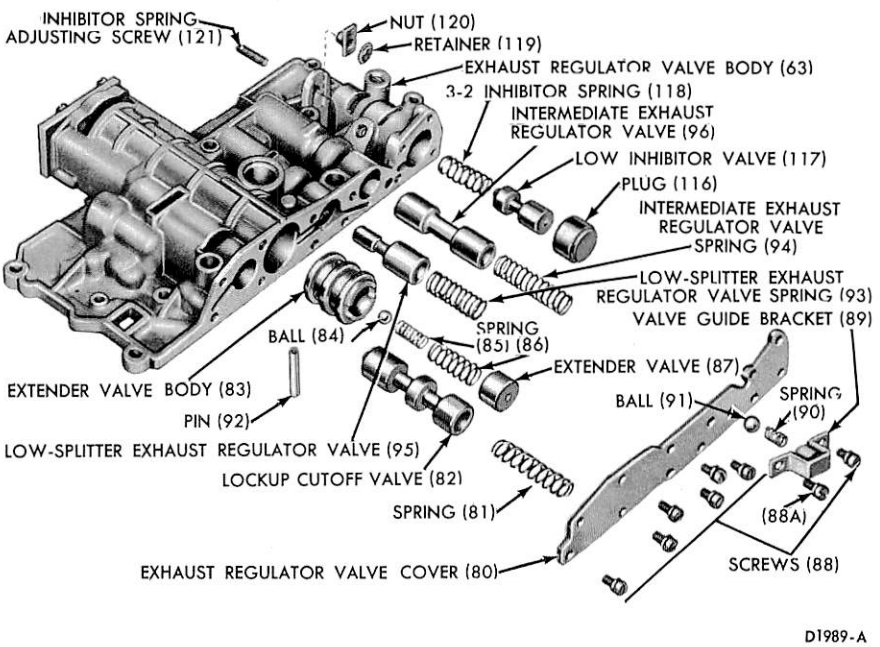

FIG. 36 Exhaust Regulator Valve Body—Front View

(83) was removed, install it with the roll pin (92). Press the pin (92) into the valve body (63) until it is slightly below the flat surface of the body.

11. Install the low splitter and intermediate exhaust regulator valves (95) and (96).
12. Install the low splitter and intermediate exhaust regulator springs (93) and (94).
13. Install the extender valve ball (84), springs (85) and (86) and extender valve (87), recessed end first.
14. Install the lockup cutoff valve (82) and spring (81).
15. Install the adjusting screw (121) and nut (12) (assembled) through slot into small end of inhibitor bore in cover (63). Also install the inhibitor spring retainer (119) with recessed center over the end of the adjusting screw (121), inhibitor spring (118), inhibitor valve (117) and inhibitor plug (116).
16. Install the exhaust cover (80) and nine regulator valve screws (88).
17. On a model which uses a valve guide bracket (89), trimmer ball regulator spring (90) and ball (91), install these parts and attach them with two screws (88).
18. On a model which does not use a valve guide bracket, trimmer ball regulator (89), spring (90) and ball (91), install one screw (88) in the hole at the right end of cover (80) and one screw (88A) in the remaining threaded hole. The short (3/8-inch) screw (88A) must be installed in the fifth threaded hole from the right end of the cover when valve guide bracket (89) is not used.
19. Torque the cover screws to 24-36 in-lbs.

Do not install the screw that attaches the drive transfer tube clip at this time.

20. Install the throttle regulator, main pressure, lockup shift, splitter shift, intermediate-to-high and splitter relay valves (106), (107), (109), (110), (112), and (113) in their respective bores and in the positions illustrated in the valve body (102), (Fig. 37).
21. Install the lockup shift valve spring (108) on the stem of the valve (109).
22. If removed for replacement, install a new reverse-range clutch exhaust regulator valve (105) in the control valve body (102).
23. Install the nylon ball (34) (Fig. 38)

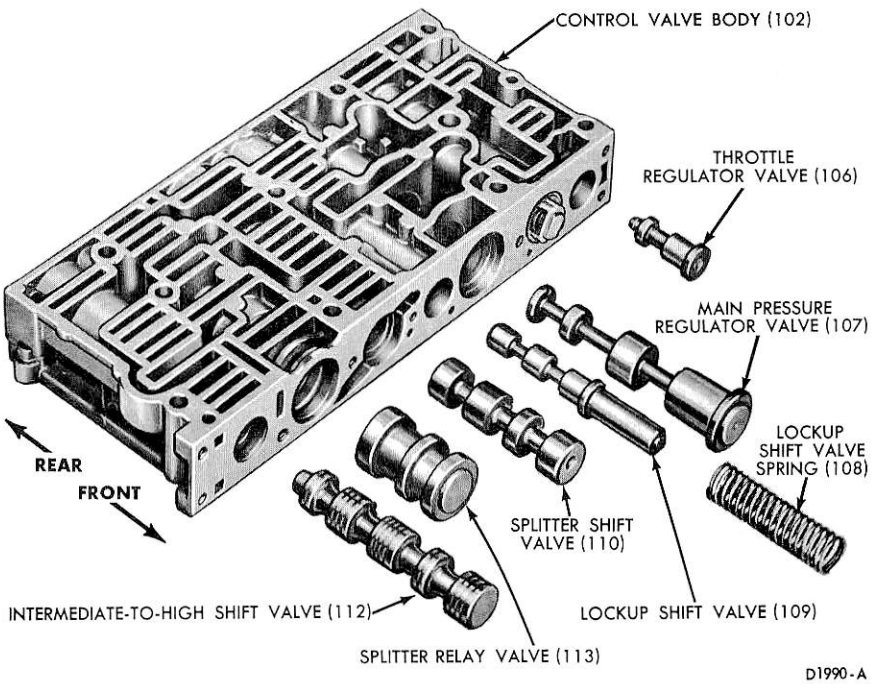

FIG. 37 Control Valve Body—Front View

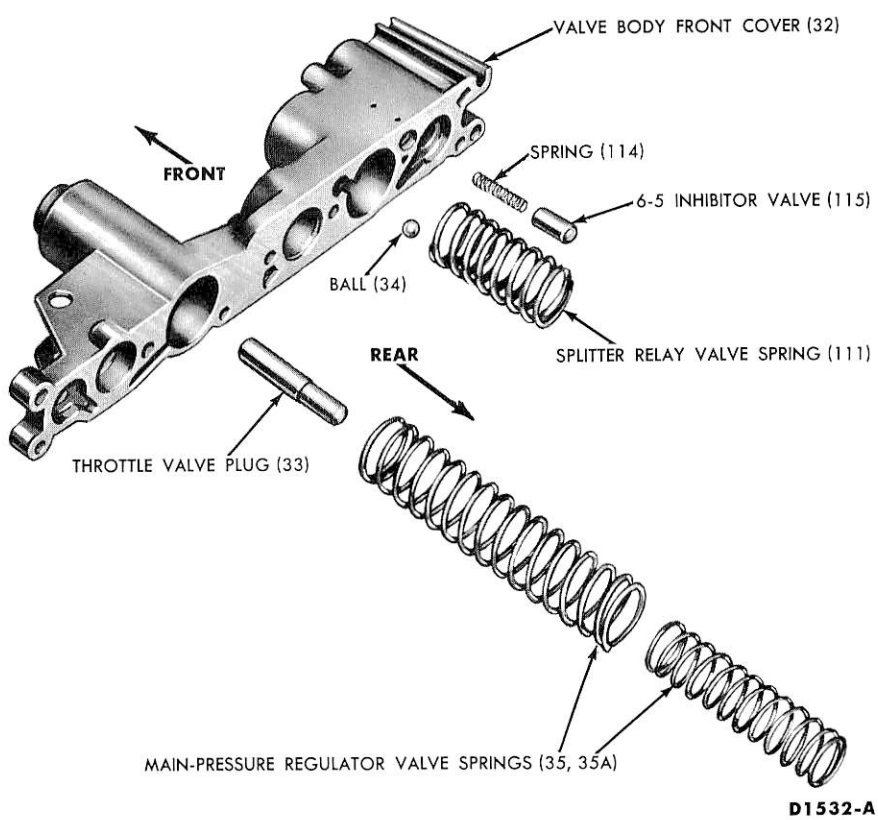

FIG. 38 Control Valve Body Front Cover—Rear View

in the small bore at the upper left of the bore which receives the splitter relay valve spring. Hold it in place with oil-soluble grease.

24. Install the throttle valve plug (33), large diameter first, in the small bore at the bottom of the recess which receives the main-pressure regulator valve spring (35).
25. Install the main pressure regulator primary and secondary springs (35) and (35A). Some models do not include the secondary spring (35A).
26. Install the inhibitor valve (115) and the inhibitor valve spring (114) in the valve body front cover (32).
27. Install the valve body front cover (Fig. 39), and its related components on the control valve body (102).
28. Comprss the springs and install the three screws (15). Do not tighten the screws at this time.
29. Install the intermediate-to-high blocker plug (30) (Fig. 40) and shift valve spring (27).
30. Install the cover (26), two long screws (25) and one short screw (24) but do not tighten the screws at this time.
31. Install the splitter shift plug (29) in the valve body front cover (Fig. 41).
32. Install overcontrol valve (20) in the overcontrol valve body (19).
33. Install the cover (21) on the overcontrol valve body (19) and retain it with one screw (22).
34. Install the splitter shift plug spring (28) in the recessed end of the overcontrol valve (20), previously installed in the body (19).
35. Install the splitter shift plug spring (28) overcontrol valve body (19), valve (20), over (21) and screw (22) on the valve body front cover. Install two screws (23), but do not tighten them at this time.
36. Install the intermediate-to-high shift plug (37) (Fig. 42) low-to-intermediate shift valve (38), front splitter plug (36), rear-splitter shift plug (39), lockup plug (40) and the hydraulic retarder regulator plug (42).
37. Install the manual selector valve (43), the throttle valve spring (99) and throttle valve (98).
38. Install the regulator plug (41) and intermediate-to-low shift valve spring (44) in the valve body rear cover (46) (Fig. 43).
39. Install the valve body rear cover (46) and its assembled components onto

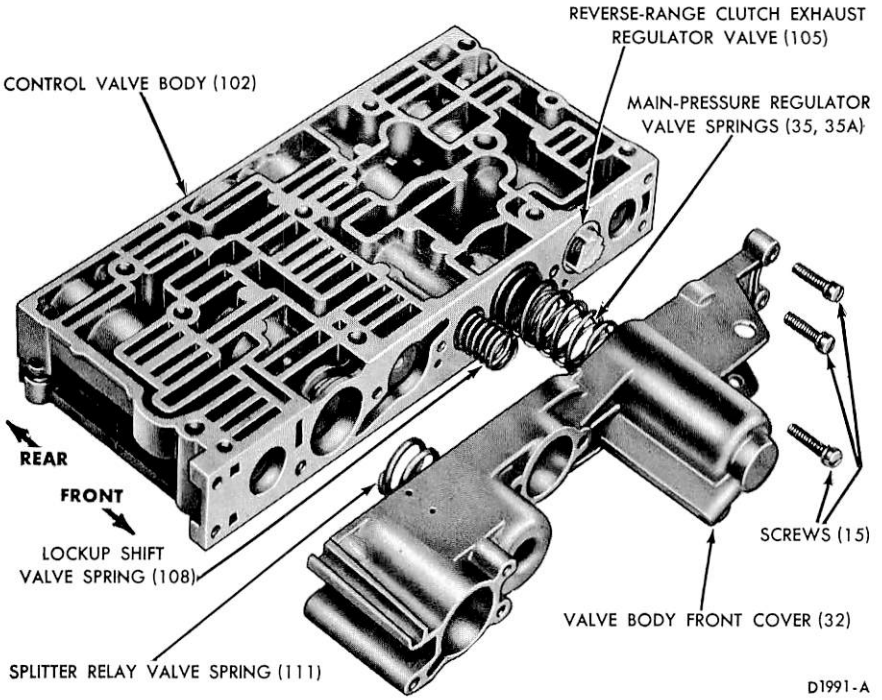

FIG. 39 Control Valve Body and Front Cover

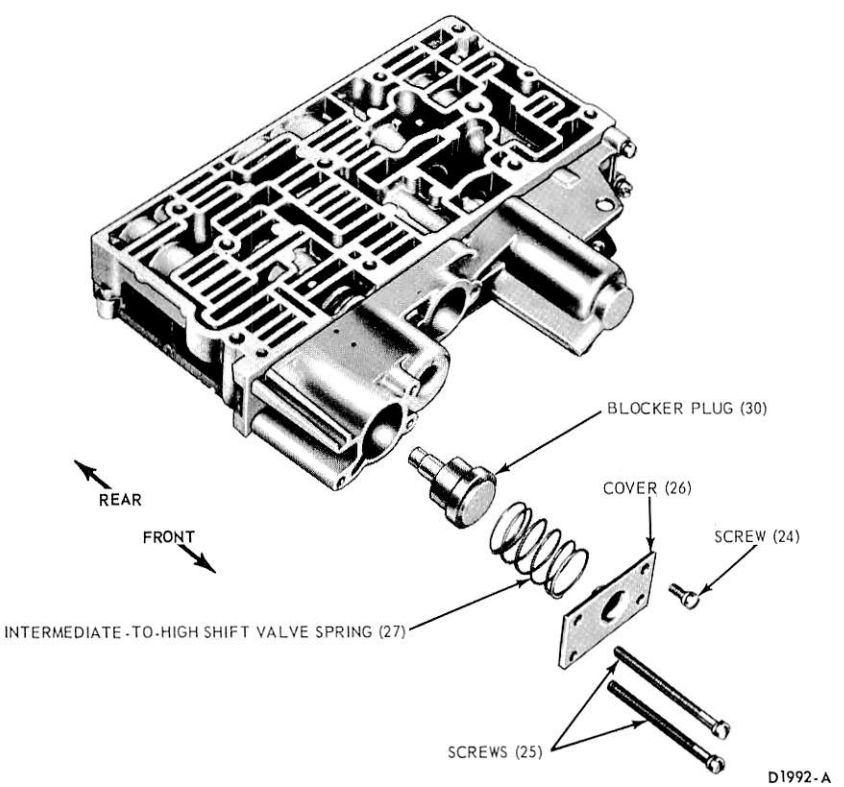

FIG. 40 Intermediate-to-High Shift Valve Components

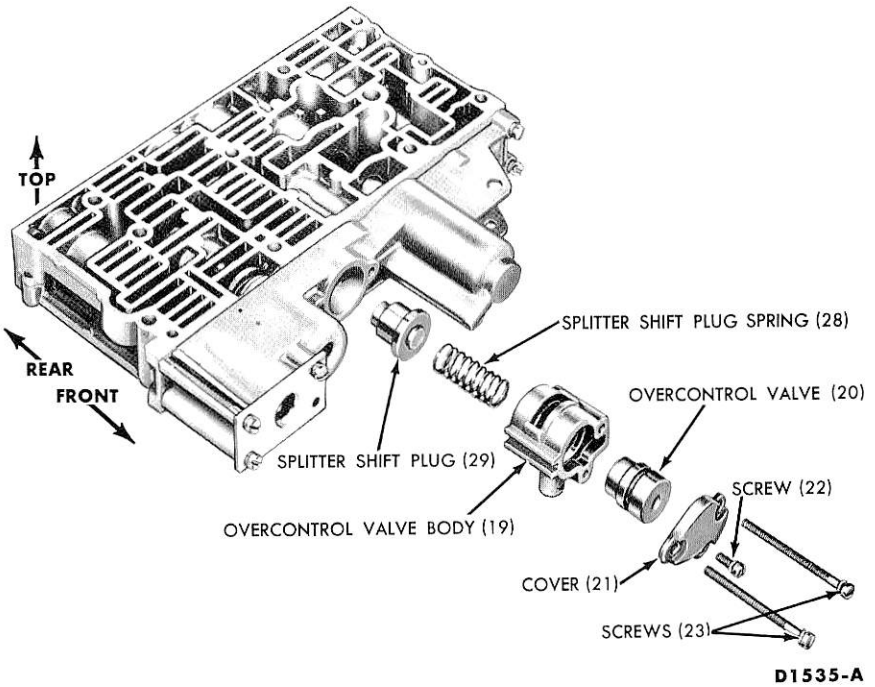

FIG. 41 Splitter Overcontrol Valve Components

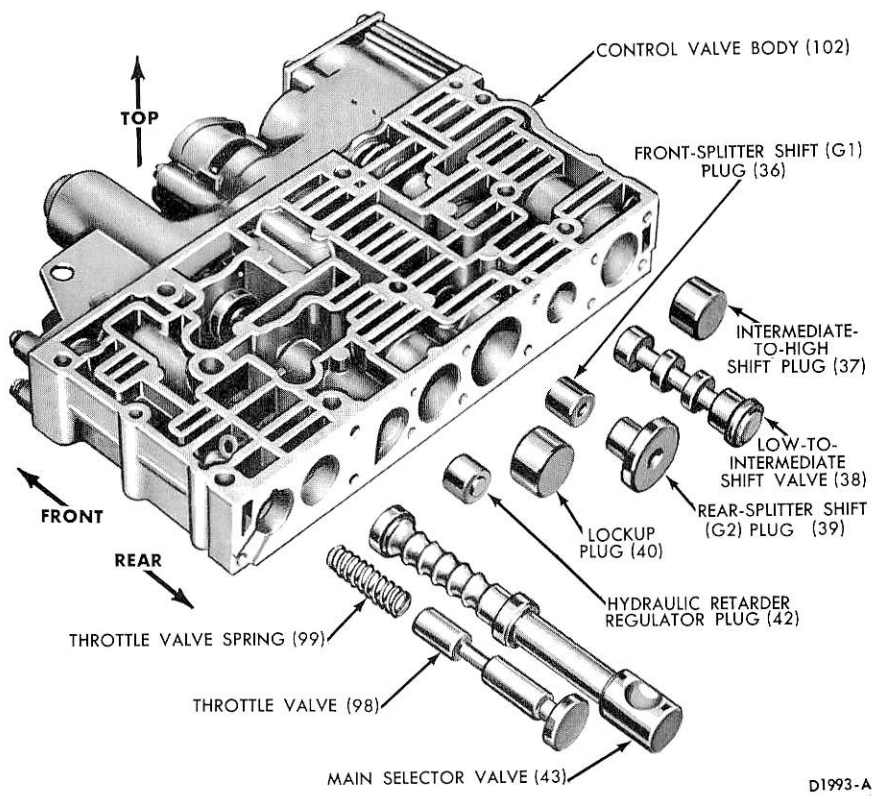

FIG. 42 Control Valve Body—Rear View

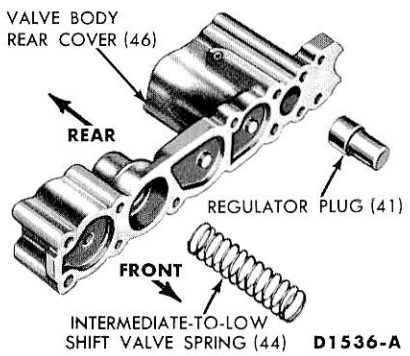

FIG. 43 Control Valve Body Rear Cover—Front View

the assembled valve body (Fig. 44).

40. Install the three screws (53) which retain the valve body rear cover (46). Do not install the screw (59) that attaches the throttle valve retainer (61). Do not tighten the screws at this time.
41. Install the throttle valve retainer (61) and secure it with two screws (62) and (59). Do not tighten the screws at this time.
42. Install the lockup knockdown plug (55) (Fig. 45). Install the plug by inserting the small end of the plug into the housing.
43. Install the accumulator valve (54). Make sure the open end of the valve is outward, for the spring to fit into.
44. Install the accumulator valve spring (56) and regulator cover (57).
45. Secure the regulator cover (57) with four screws. Torque the screws (58) to 24-36 in-lbs.
46. Install the accelerator plug (47) and cover (48) (Fig. 46).
47. On a model which includes a ball (49), trimmer ball regulator spring (50) and the valve guide bracket (51), install these parts and secure them with two screws (52). Install a third screw (52) to secure the cover (48). Do not tighten the screws at this time.
48. On a model which does not include the ball, spring, and bracket, install three screws (52) to secure the accelerator plug cover (48). Do not tighten the screws at this time.

Install the selector valve ball (101) and spring (100) in the hole which registers with the manual selector valve indentations (Fig. 33).

49. Install the valve body separator plate (97) on the valve body assembly (Fig. 33).

50. Install the assembled regulator valve body and secure it with two screws (77). Torque the screws to 24-36 in-lbs.
51. Place the control valve body, flat (top) side downward, on a flat surface. Check to determine if the end covers project below the valve body. Tap the valve body downward to correct any such projection. Torque all screws at the front and rear of the valve body to specification. This check is important. The valve body must seat tightly against the oil transfer plate, on which is mounts, to prevent fluid leakage.
52. Assemble a spring retainer (16) to each end of pump overage valve spring (14) (Fig. 33). Compress the spring and install it between the ribs on the valve body front cover (32). Install pump overage valve assembly (18) and fasten it with retainer spring (17). The seat face of the valve assembly must protrude at least 0.005 inch beyond the valve body mounting plate to assure seating of the valve against the oil transfer plate.
53. Install the high-transfer tube (12) with the clip (13). Fasten the clip with its attaching screw (24) (Fig. 33).
54. Install the drive-transfer tube (11) with its clip (10). Fasten the clip with a screw (88).
55. Install the signal tube (126) and tube clip (127) with a screw (68).
56. Torque the screws (24), (68) and (88) to 24 to 36 in-lbs.

OIL TRANSFER PLATE

Disassembly

1. Remove the two screws which attach the converter lube supply cover to the oil transfer plate and remove the cover.
2. Remove the two screws which attach the converter pressure regulator valve retainer to the oil transfer plate. Remove the retainer, spring, seat, and the steel ball.
3. The low-range clutch exhaust regulator valve and orifice cup should not be removed unless it is to be replaced. Check the operation of the valve while cleaning the transfer plate. The valve should hold the cleaning solvent on the side opposite the spring for at least 15 seconds.

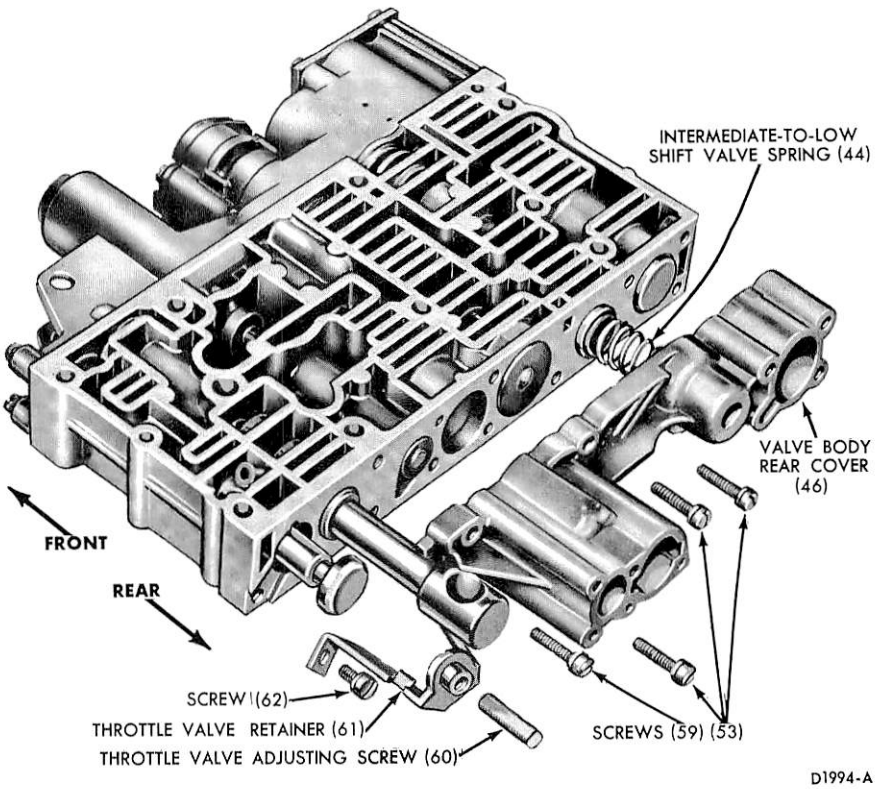

FIG. 44 Control Valve Body Rear Cover—Rear View

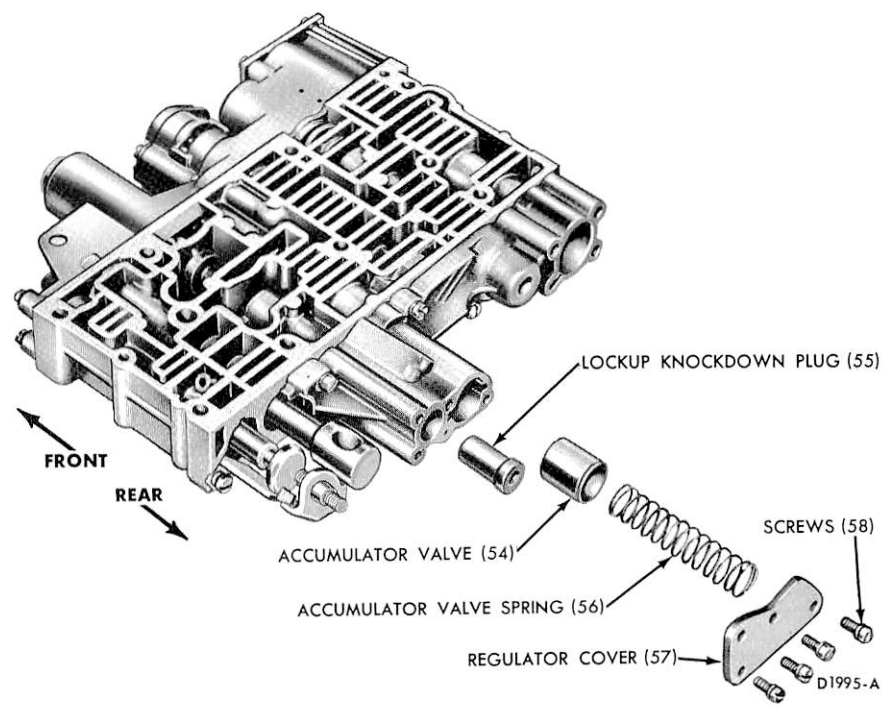

FIG. 45 Lockup Knockdown Plug and Accumulator Valve

Assembly

1. When replacing the low-range clutch exhaust regulator valve and orifice cup, press the cup, convex side first, into the recess of the exhaust regulator valve. Be sure the cup is entered.
2. Press the regulator valve, wide end first, into its bore in the transfer plate. Exert pressure only on the shoulder of the valve next to the closed portion of the spring cover. Do not let the cup slide from its recess while the valve is being installed. When the valve is in place, the spring cover must be flush with or slightly below the outer surface of the transfer plate.
3. Install the lube supply ball seat in the lube supply cover. Install the lube supply cover with the ball seat end toward the rear. Torque the screws to 24-36 in-lbs. **The nylon ball is installed from the other side of the oil transfer plate when the plate is assembled to the transmission housing.**
4. Assemble the steel ball, seat, spring, and converter pressure regulator valve retainer to the oil transfer plate and install the two screws. Torque the screws to 24-36 in-lbs.

RANGE SELECTOR SHAFT AND THROTTLE CONTROL LEVERS

When removing or installing the selector and throttle levers, be careful not to push the shafts back inside the transmission housing. When this happens, the shafts lose their index location with their corresponding valve of the control valve body in the housing. It will then be necessary to remove the transmission oil pan and reposition the shafts.

Disassembly

1. Place the selector lever in the 3-6 detent position.
2. Straighten the TV lever washer on the TV shaft. Remove the TV nut and washer and remove the lever from the shaft. **Always hold the lever when removing or installing lever retaining nuts. Do not use the mechanical stop inside the transmission as the reaction member for removal of lever retaining nuts. The stop is used for making a calibrated adjustment and could be damaged.**
3. Straighten the shift selector lever washer on the selector shaft. Remove the nut and washer and remove the lever.
4. Remove the O-ring seals from the shafts.

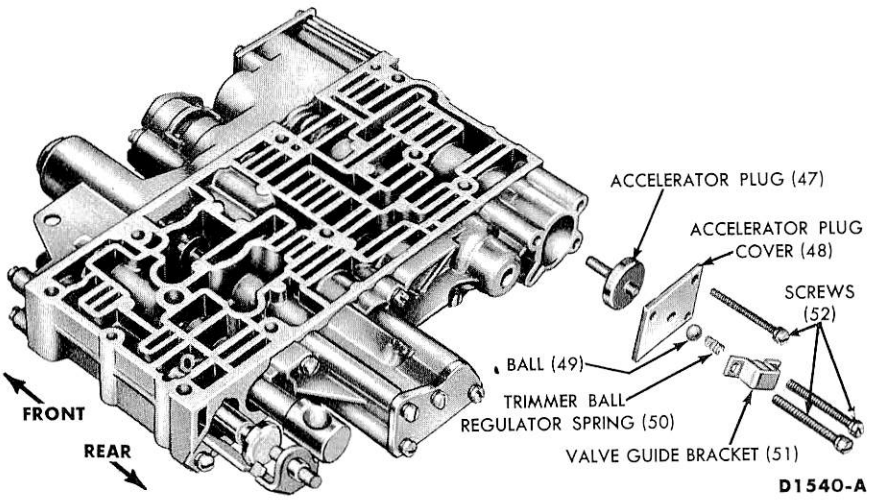

FIG. 46 Accelerator Plug and Cover

Assembly

1. Install a new O-ring seal on the selector shaft.
2. With the selector shaft in the 3-6 detent position, hold the shaft with a pair of pliers and slide the selector lever onto the shaft far enough for the retaining nut to be installed.
3. Install the washer and retaining nut. Then, grasp the end of the selector lever and while pulling out (away from the transmission), tighten the retaining nut to 14-17 ft-lbs torque. Bend the washer against a flat on the nut.
4. Before installing the TV lever, determine if the transmission has a long or short stroke TV configuration. On transmissions with a long stroke TV, the lever will have an arc travel of 32 degrees from stop to stop. The short stroke will have an arc travel of 16 degrees from stop to stop.
5. Install a new O-ring seal on the TV shaft.
6. If the transmission has a long stroke TV configuration, leave the selector lever in the 3-6 detent position. If the transmission has a short stroke configuration, place the selector lever in the reverse detent position.
7. With the selector lever in the proper detent, hold the TV shaft with a pair of pliers and slide the TV lever onto the shaft far enough for the retaining nut to be installed.
8. Install the washer and retaining nut. Then, grasp the end of the TV lever and while pulling out (away from the transmission) tighten the nut to 14-17 ft-lbs torque. Bend the washer against a flat on the nut.

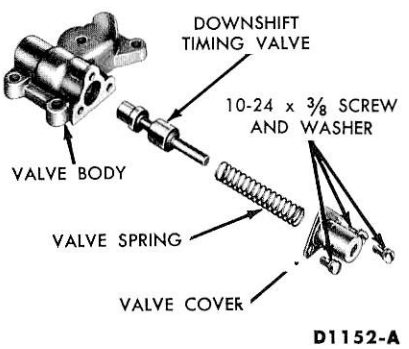

FIG. 47 Downshift Timing Valve

DOWNSHIFT TIMING VALVE

Disassembly

1. Remove the downshift timing valve cover (Fig. 47).
2. Remove the spring and downshift timing valve.

Assembly

1. Insert the valve in the body and place the spring on the stem of the valve.
2. Install the valve cover over the spring and torque the three screws to 24-36 in-lbs.

HYDRAULIC RETARDER CONTROL VALVE

The retarder valve stop pin in the retarder valve has been changed from a tight fit to a loose fit in the valve body for ease of removal or installation. The loose stop pin can easily drop out of the valve body when it is separated from the transmission if the valve is held inward.

The absence of the stop pin will

result in improper oil circulation within the transmission, resulting in overheating and damage to the transmission. The valve will still function properly without the pin and will give no indication that the pin is missing.

Care must be exercised at the time of installation of the valve on the transmission to make certain that the pin is properly located in the retarder valve body.

Disassembly

1. Using vise-grip pliers, twist the lubrication regulator valve retainer out of the retarder control valve body (Fig. 48).
2. Remove the lubrication regulator valve spring and regulator valve (steel) ball.
3. Press inward on the valve to relieve the spring tension, then, lift out the retarder valve retaining pin.
4. Strike the retarder valve stem several sharp blows with a mallet. The rebound of the valve, after being driven against its spring, will force out the oil seal (Fig. 49).
5. Remove the retarder valve assembly, oil seal and return spring.
6. The spring pin and clevis pin need not be removed unless replacement is necessary.

Assembly

1. If the clevis pin and spring pin were removed, replace them.
2. Install the retarder valve return spring and retarder valve assembly in the retarder control valve body.
3. By inserting a thin fiber strip into one of the valve body ports while the valve is compressed against the spring, hold the valve in its inward position. From the ported side of the valve body, place the pin in the valve body. Remove the fiber strip.
4. Press the seal into the housing until the top of the seal is 1/16-inch above the body. **Do not press the seal flush with the body or against the pin. Be sure there are no sharp edges or burrs on the slotted area of the retarder control valve.**
5. Install the lubrication regulator valve (steel) ball, spring and retainer. Press the retainer flush with, or to 0.030 inch below, the valve body surface.

CONVERTER PUMP COVER AND LOCKUP CLUTCH

Disassembly

1. Remove the lockup clutch reaction plate (Fig. 50) from the converter pump cover, and lift out the clutch plate. If necessary, tap the edge of the cover against a wooden block to remove the reaction plate.
2. Remove the seal ring from the front flange of the reaction plate.
3. Remove the snap ring which holds the lockup clutch piston in the pump cover.
4. Remove the piston from the pump cover by tapping the edge of the cover against a wooden block.
5. Remove the piston inner seal and seal retainer (if loose) from the pump cover hub.
6. Remove the seal ring from the outer groove of the piston.
7. Clean all of the converter cover and lockup clutch parts, and inspect them for wear or damge. Replace all parts that are worn beyond the specified limits or that are damaged.

Check the orifice in the lockup piston. This orifice is drilled through one of the dowel holes.

The converter pump cover bushing can be replaced if it is excessively worn.

Assembly

1. Install the seal ring (Fig. 50) in the outer groove of the lockup clutch piston. Then apply a light coat of oil to the seal.
2. Install the piston inner seal retainer and seal on the pump cover hub.
3. Install the piston in the converter pump cover so that the dowel holes in the piston engage the dowels in the cover (Fig. 31). The balance marks on both parts must also be aligned. To align the parts correctly, place a heavy pencil mark in line with a dowel on the bolt circle of the cover, then match this mark with another mark on the piston in line with a dowel hole on the reverse side. If the dowels do not enter the dowel holes, the lockup clutch will not disengage and the converter will not function.
4. Install the snap ring. If the piston does not push far enough into the pump cover to install the snap ring, compress the piston by hand pressure.

CONVERTER PUMP

Disassembly

1. Remove the hook-type seal ring from the hub.
2. Flatten the tabs on the hub bolt lock strips (Fig. 50) and remove the bolts, lock strips, and bearing retainer.
3. Remove the hub and bearings from the pump. Then lightly tap the bearing from the hub.
4. Remove the hub gasket.
5. Tap out all damaged or worn converter pump to converter cover bolts. Only damaged bolts should be removed from the pump. Do not lose the positions of the balance weights.

Assembly

1. If any converter pump bolts were removed, insert the new bolts around the outer diameter of the pump, and press them into place.
2. Install a new gasket on the hub. **Do not use a gasket sealer.** If the pump hub is to be used for prefitting the front pump oil seal, do not install the seal ring at this time.
3. Install the bearing in the hub, and position the hub in the pump.
4. Install the bearing retainer on the hub, align the mounting holes, and install new lock strips. Install the attaching bolts and torque them to 9-11 ft-lbs. Be sure to bend the pointed tab of lock strips up to lock the bolts.

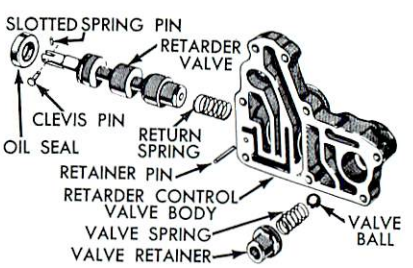

FIG. 48 Hydraulic Retarder Control Valve Exploded View

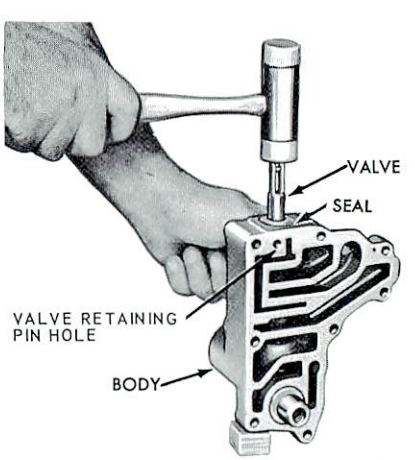

FIG. 49 Removing Hydraulic Retarder Valve Seal

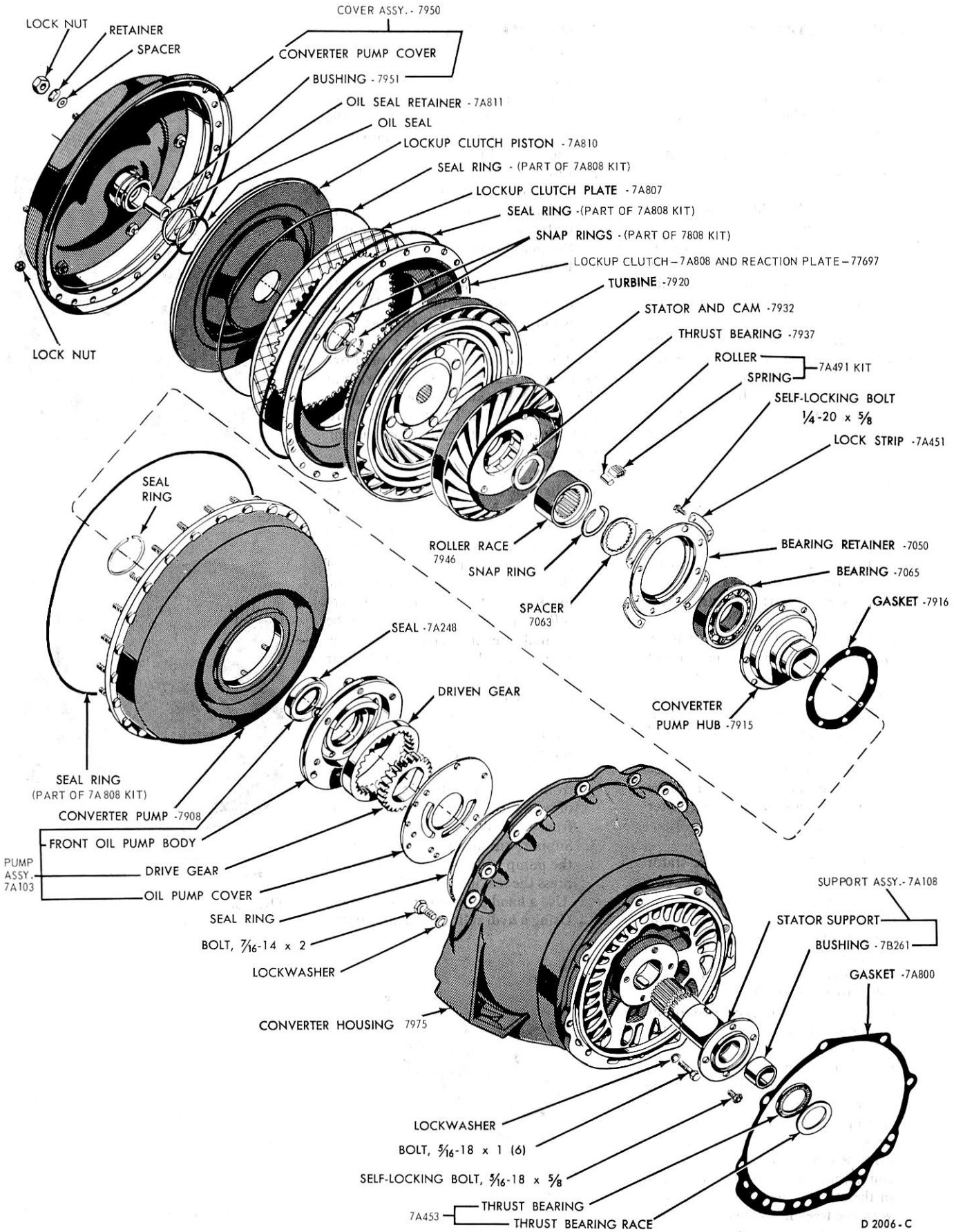

FIG. 50 Torque Converter, Lockup Clutch and Front Pump

CONVERTER STATOR

Disassembly

1. Place the stator on a clean bench, with the freewheel roller race facing upward.
2. Remove the roller race by rotating it clockwise while lifting it out of the stator.
3. Remove the 10 rollers and springs from the stator.
4. Inspect the stator for cracks or excessive wear, and check the rollers and springs for nicks, burrs, or other damage. Replace the parts as needed.

Thoroughly clean and lubricate the roller thrust bearing in the stator. Then rotate the bearing while pressing upon the rear thrust washer. If the bearing does not rotate smoothly without roughness or binding, replace it as follows:

5. Remove the old bearing from the stator.
6. Clean the bore and thrust face of the stator, and make sure that both are free of burrs or raised metal.
7. With the seamed edge of the thrust bearing outer shell facing the stator thrust washer, start the bearing into its bore.
8. Using tool (T57T-7003-A7) with a diameter slightly larger than that of the thrust bearing and which is smooth and flat on the side that contacts the bearing outer shell, press the bearing into its bore until the upper edge of the outer shell is 0.025-0.035 inch above the surface next to the outside diameter of the bearing. **Do not bottom the outer shell in the stator.**

Assembly

1. Apply oil-soluble grease to the stator cam pockets, and place the freewheel roller springs in the openings with the open end facing the stator bore at the end against the roller (Fig. 51)
2. Compress the springs to allow the roller to be inserted in the shallow end of each cam pocket. Install one spring and roller in each of the ten pockets in the stator.
3. Install the freewheel roller race in the stator with the counterbored side facing away from the stator needle bearing. Rotate the race clockwise while installing it. When the race is fully seated, twist it firmly in a counterclockwise direction to lock it in the stator. Then place the stator with the freewheel inner race facing upward until installation.

CONVERTER HOUSING AND FRONT PUMP

Disassembly

1. Remove the bolts and lock washers that hold the front pump on the housing, and remove the pump body and gears (Fig. 52).
2. Lift the front pump cover and seal ring out of the converter housing.
3. Remove the gears from the pump body. Drive the seal out the front of the pump body.
4. Remove the bolts that hold the converter stator support assembly on the converter housing. Using a wood block, drive the support from the housing (Fig. 53).

The converter stator support bushing and the roller thrust bearing at the end of the stator support can be replaced. Refer to Removal and Installation for information on bushing replacement.

Assembly

1. Align the holes in the stator support with the holes in the converter housing by installing two headless bolts in the converter housing. Place a new support through the rear of the converter housing and over the headless bolts. The bolt holes are offset and the support cannot be rotated after it is driven into place. Using a wood block against the rear of the support, drive the support tightly against the housing (Fig. 54). Remove the two headless bolts. Then install the attaching bolts and torque them to 17-20 ft-lbs.
2. Coat the outer diameter of a new front pump seal with a very thin film of white lead. Start the seal into the front bore of the pump body.
3. Support the machined rear face of the pump body on a flat surface and press the seal into the body (Fig. 55). **Use a hand press for this operation. Using a hydraulic press may damage**

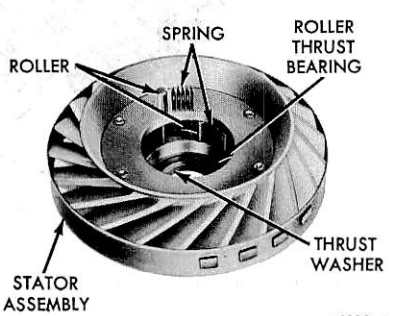

FIG. 51 Converter Stator

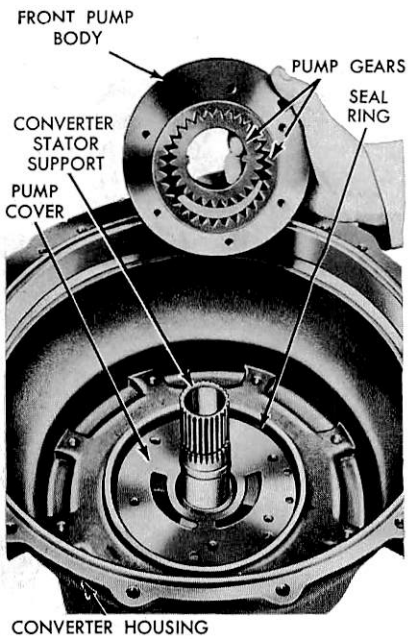

FIG. 52 Front Pump Body Removal

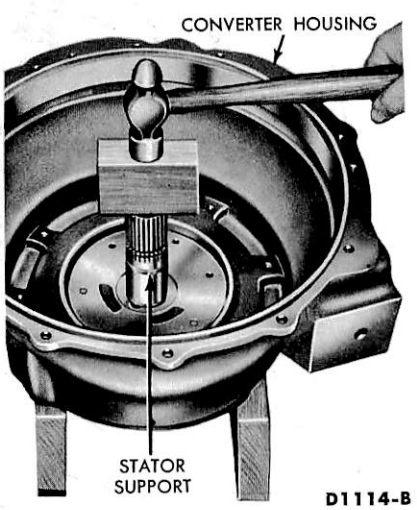

FIG. 53 Converter Stator Support Removal

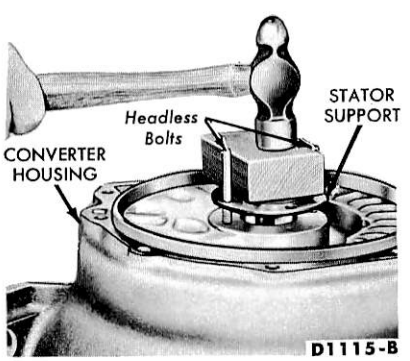

FIG. 54 Converter Stator Support Installation

the seal. Press the seal into the pump body until the distance measured from the front surface of the seal to the rear machined surface of the pump body is 1.595-1.605 inches.

4. Place the pump gears in the pump body. Position the pump cover and install two guide bolts (Tool J3387-2) in the body. Install the square section O-ring seal round the pump cover.
5. Place the pump in front of the converter housing and insert the guide bolts through the proper holes in the housing and install four bolts with lock washers through the rear of the converter housing into the pump body. Remove the guide bolts and install the two remaining bolts with lock washers. Torque all the bolts to 15-18 ft-lbs.
6. With the hook-type seal ring removed from the converter pump hub, align the flats on the hub with the front pump drive flats and insert the hub through the seal. Leave these parts assembled in this manner until ready for final assembly.
7. Install the needle roller bearing and needle bearing assembly. Be sure the rollers in the assembly are facing down.

SPLITTER MECHANISM, HIGH-RANGE CLUTCH, AND POWER TAKE-OFF DRIVE GEAR

Disassembly

1. Remove the low-range sun gear snap ring (Fig. 56), then remove the low-range sun gear and intermediate range sun gear.
2. Grasp the unit with the fingers under the high-range clutch and the thumbs over the low-splitter clutch friction plate to prevent it falling apart, then place it on blocks.
3. Remove the thrust washer from the front of the splitter planetary carrier assembly, then remove the snap ring which holds the splitter planetary carrier assembly to the splitter output shaft assembly (Fig. 57).
4. Remove the splitter planetary carrier assembly and thrust washer in front of the splitter sun gear.
5. Remove the high-splitter clutch and low-splitter clutch friction plate on models having an 8-tanged low-splitter clutch plate (Fig. 58).
6. Remove the high-splitter clutch plate retaining snap ring, then remove the high-splitter clutch back plate.
7. In 3-plate clutch assemblies, remove the two internal-splined plates and one externalsplined plate. In 5-plate clutch assemblies, remove three internal-splined plates and two external-splined plates. Remove the low-splitter clutch friction plate on models having a 6-tanged plate.
8. Place the high-splitter clutch housing in a press, support the rear of the housing, compress the piston Belleville return spring, then remove the snap ring (Fig. 59). Remove the housing from the press. **When releasing the Belleville spring pressure, be sure that the spring does not catch in the snap ring groove.**
9. Remove the Belleville spring and tap the forward edge of the clutch housing against a wood block to remove the high-splitter piston.
10. Remove the teflon seal ring and seal ring expander from the piston. Remove the hook-type seal ring from the housing.
11. Remove the thrust washer and the two hook-type seal rings from the diaphragm (Fig. 60).
12. Remove the splitter output shaft assembly. **Remove the splitter output shaft slowly so that the hook ends of the seal rings do not break off. Remove the two wire snap rings and the three hook-type seal rings, if necessary.**
13. Support the rear of the high-range clutch housing assembly in a press and compress the low-splitter clutch piston Belleville spring, using the tool shown in Fig. 61, then remove the snap ring. Carefully release the pressure on the Belleville spring to keep the inner edge of the spring from catching in the snap ring groove. Do not attempt to lift the diaphragm from the assembly at this time, as the vanes in the front-fluid velocity governor, may be damaged by the pitot tube.
14. Remove the assembly from the press and lift out the Belleville spring.
15. Remove the low-splitter clutch piston from the high-range clutch diaphragm and remove the teflon seal ring and seal ring expander from the piston. Remove the hook-type seal ring from the diaphragm. Do

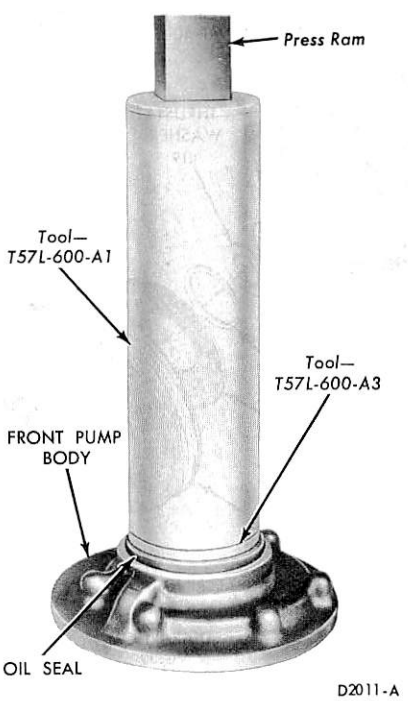

FIG. 55 Front Pump Seal Installation

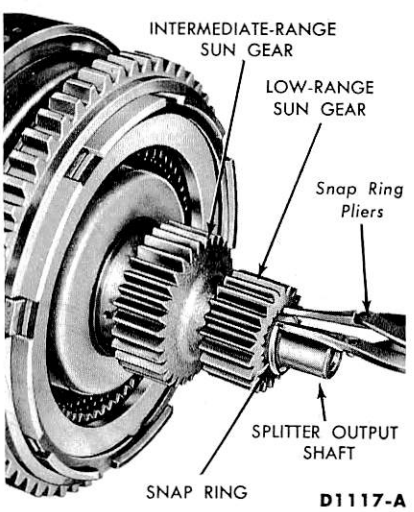

FIG. 56 Low-Range Sun Gear Snap Ring Removal

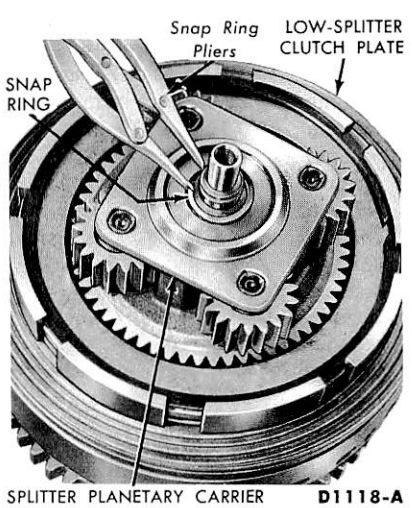

FIG. 57 Splitter Planetary Snap Ring Removal

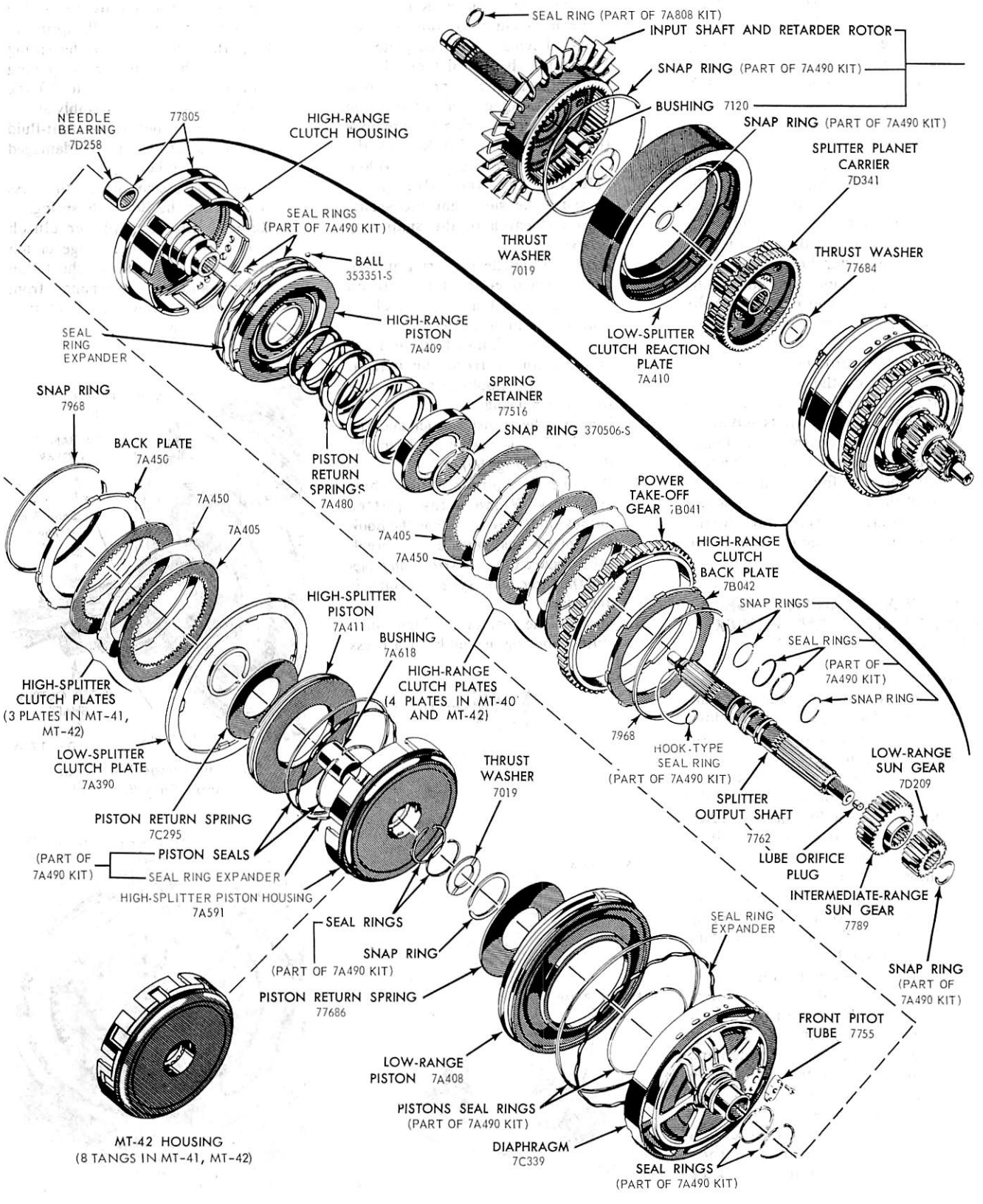

FIG. 58 Splitter Mechanism, High-Range Clutch and Power Take-Off Drive Gear

not attempt to remove the diaphragm from the assembly.

16. Remove the two front pitot tube mounting screws and lock washers from the front surface of the diaphragm to allow the pitot tube to drop into the front governor collector ring (Fig. 62). Lift the diaphragm from the assembly and remove the two hook-type seal rings from the rear of the diaphragm. Remove the pitot tube from the collector ring.
17. Support the front surface of the high-range clutch housing assembly in a press using a suitable block in the center of the housing so that the governor collector ring will not be damaged. Compress the piston return spring retainer with the tool, and remove the snap ring. Release the pressure on the piston return spring retainer slowly, making sure the inner edge of the spring retainer does not catch in the snap ring groove as the spring expands.
18. Remove the assembly from the press and lift off the retainer and springs.
19. Remove the large internal snap ring from the high-range clutch housing.
20. Remove the high-range clutch reaction plate. In 5-plate clutch assemblies, remove three internal-splined plates and two external-splined plates. In 7-plate clutch assemblies, remove four internal-splined plates and three external-splined plates. Remove the power take-off gear on models which use a separate gear.
21. Tap the rear of the housing on a wood block to loosen the high-range clutch piston. Remove the piston. Then remove the teflon seal ring and seal ring expander from the piston and the hook-type seal ring from the housing.

The high-range clutch housing needle bearing or bushing can be replaced. Refer to Removal and Installation for bushing and bearing replacement tools.

Assembly

1. Install the hook-type seal ring on the high-range clutch housing assembly. Install the teflon seal ring and the seal ring expander on the high range clutch piston assembly. Coat the seals lightly with oil.
2. Install the piston in the housing, being careful not to damage the seal rings.
3. Support the front surface of the piston housing in a press, using a suitable block at the center of the housing so that the governor collector ring will not be damaged.
4. Position the coil-type piston return springs on the top of the piston, set the retainer on the springs and position the tool on the retainer (Fig. 63). Align the hole in the retainer with the hub of the housing, and then center the tool on the retainer. Compress the springs until the retainer is sufficiently below the snap ring groove and install the snap

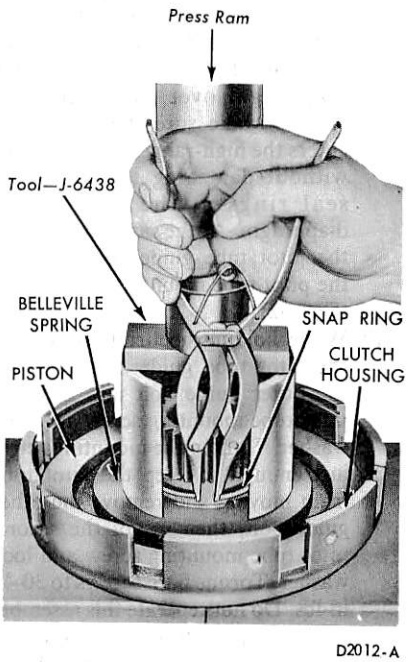

FIG. 59 High-Splitter Piston Belleville Spring Snap Ring Removal or Installation

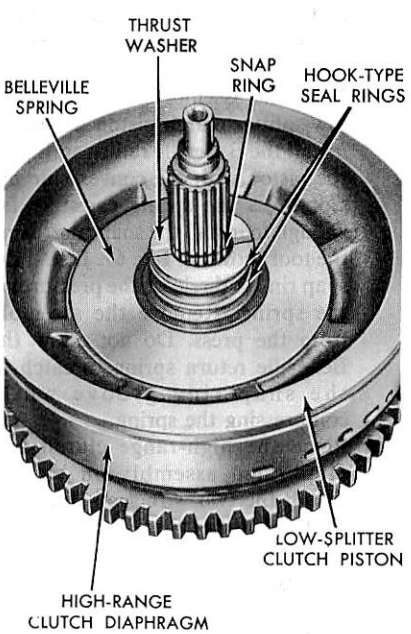

FIG. 60 Low Splitter Clutch Piston

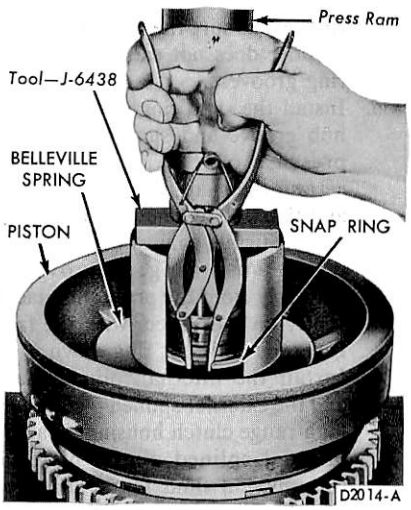

FIG. 61 Low-Splitter Piston Belleville Spring

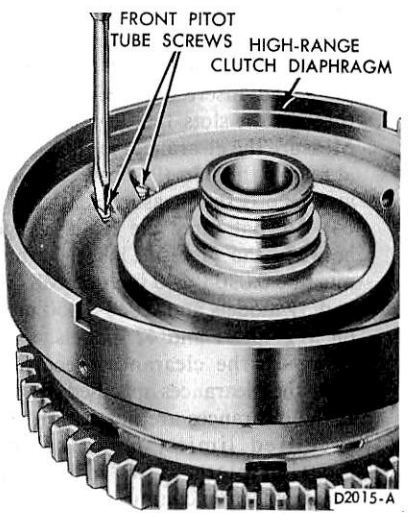

FIG. 62 Front Pitot Tube Screw Removal and Installation

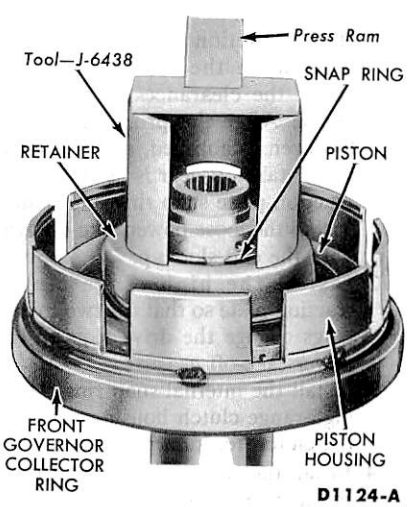

FIG. 63 High-Range Clutch Piston Return Spring Retainer Installation

ring. Make sure the inner edge of the retainer does not catch in the snap ring groove.

5. Install the snap ring in the housing hub groove and slowly release the pressure on the retainer. Make certain the snap ring is fully seated and that the retainer is straight and returns firmly against the lower side of the snap ring. Remove the assembly from the press and place it gently on the bench, with the front governor collector ring down.
6. Install the internal-splined plates and the external-splined plates in the high-range clutch housing. Soak the internal splined clutch plates in transmission fluid for at least two minutes before installation.
7. If a loose power take-off gear is used, temporarily install the high-range clutch reaction plate and snap ring without the gear.
8. Using a small screwdriver, separate the reaction plate from the clutch plate and insert two feeler gauges through the slots 180 degrees apart. Measure the clearances in the clutch at four of the slots (90 degrees apart) and record the measurements (Fig. 64). **Do not force the feeler gauge between the plates.** This clearance must be 0.030-0.040 inch on MT-30 and 31 models and 0.040-0.050 inch on MT-40, 41 and 42 models.
9. Compare the clearances recorded with the clearances specified above. If the clearances are not within the specified limits, measure the reaction plate at its maximum thickness (from contour to flat side). Select a new plate with the thickness range required. The reaction plate is available in thickness of: 0.296-0.298, 0.304-0.306, 0.312-0.314 and 0.320-0.322.
10. If the reaction plate is replaced, reassemble the clutch pack and check the clearances as described above. After the proper clearnace has been established, and if a loose power take-off gear is used, remove reaction plate snap ring and plate.
11. Install the loose power take-off gear with the end slots up.
12. Install the high-range clutch reaction plate so that the two longer tangs engage the drive slots in the power take-off gear.
13. Install the internal-snap ring in the high-range clutch housing to retain the clutch reaction plate.
14. Install the two hook-type seal rings on the rear of the high-range clutch diaphragm.
15. Install the high-range clutch with the front governor collector ring facing upward. Install the two guide bolts in the front pitot tube on the side of the pitot tube that the drilled port is located (Fig. 65). **The guide bolts can be made from two 5-inch lengths of 3/16-inch diameter brazing rod threaded with a 10-32 die a distance of 3/8-inch. Round off the unthreaded ends of the guide bolts.**
16. Place the pitot tube in the governor collector ring with the intake port toward the outer diameter of the ring. Install the high-range clutch diaphragm over the high-range clutch. Make sure the diaphragm enters the high-range clutch housing without damaging the hook-type seal rings at the rear of the diaphragm. At the same time, direct the pitot tube guide bolts through the pitot tube mounting screw holes (Fig. 62).
17. While holding up firmly on one of the pitot tube guide bolts, remove the other guide bolt and install a pitot tube mounting screw and lock washer. Tighten the mounting screw just enough to keep the pitot tube from moving and remove the other guide bolt, then install the second pitot tube mounting screw and lock washer. Torque both screws to 30-48 in-lbs. Do not separate this assembly while the pitot tube is in position.
18. Install the teflon seal ring and seal ring expander on the low-splitter clutch piston. Install the hook-type seal ring on the low-splitter piston housing side of the diaphragm.
19. Lightly coat the seal rings with oil and carefully install the low-splitter piston so that the seal rings are not damaged.
20. Place the assembly in a press with low-splitter clutch piston up, then install the Belleville return spring on the piston with the convex side up. Compress the spring carefully far enough to install the snap ring, using the tool shown in Fig. 61. Install the snap ring and release the pressure on the spring. Remove the assembly from the press. Do not allow the Belleville return spring to catch in the snap ring groove while compressing the spring.
21. Place the high-range clutch and diaphragm assembly on blocks. Install the two wire snap rings and the three hook-type seal rings on the splitter output shaft assembly. Lightly coat the seal rings with oil and carefully install the splitter shaft so that the seal rings are not damaged.
22. Install the hook-type seal ring on the inner diameter of the high-splitter clutch housing and gear.
23. Install a teflon seal ring and a seal ring expander on the outer diameter of the high-splitter piston.
24. Lightly coat the seals with transmission fluid and install the piston in the housing, being careful not to damage the seals.
25. Place the piston and housing assembly in a press with the piston up, then install the Belleville piston return spring on the piston with the convex side up. Compress the spring carefully and only far enough to

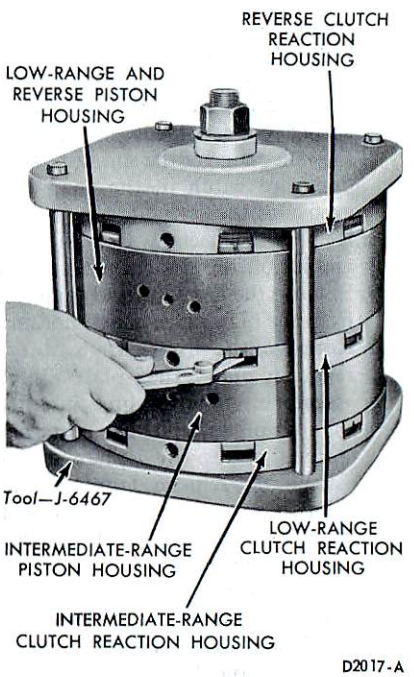

FIG. 64 Range Clutch Clearance Check

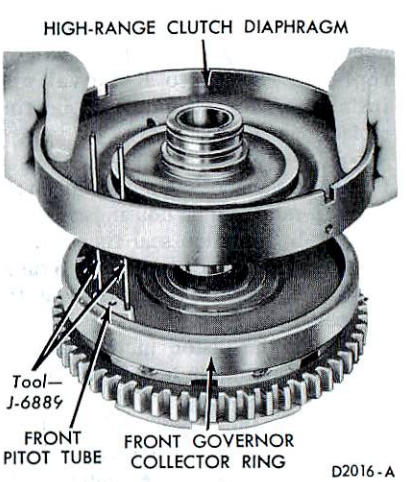

FIG. 65 High-Range Clutch Diaphragm Installation

install the snap ring, using the tool shown in Fig. 59. Install the snap ring and release the pressure on the spring. Remove the assembly from the press.

26. On models using a six tang plate, install the low-splitter clutch friction plate on the highsplitter clutch housing so that the six internal tangs do not engage the slots in the housing where the high-splitter piston tangs are located (Fig. 66). If the tangs are installed in the same slots, in error, both splitter clutches will be applied when the high-splitter piston is actuated.
27. Install the internal and external-splined plates.
28. Install the high-splitter clutch back plate. Install the large internal snap ring which retains the back plate.
29. Install the two hook-type seal rings and the bronze thrust washer on the front side of the diaphragm, then apply a light coat of oil to these parts.
30. On models using an 8-tanged low-splitter clutch plate, install the plate on the assembled high-splitter clutch engaging the eight slots on the outside of the housing. The six tanged plate is installed at the time of the high-splitter clutch assembly, being careful not to damage the ring seals.
31. Coat the bronze thrust washer with oil-soluble grease and install the washer in the splitter planetary carrier assembly.
32. Install the splitter planetary carrier assembly, splining it on the splitter output shaft and meshing the external teeth with those of the splitter clutch plates. Install the snap ring on the splitter shaft to retain the splitter planetary carrier assembly.
33. Lightly coat the bronze thrust washer with oil and install the washer on the splitter planetary carrier.
34. Remove the splitter assembly from the blocks and place it on its side. **Be careful in handling the assembly until the low-and intermediate-range sun gears are installed and retained by snap rings so that the front pitot tube will not damage the front governor collector ring.**
35. Install the intermediate-and low-range sun gear with the chamfered end of teeth outward (Fig. 58).
36. While holding the splitter shaft by the opposite end, install the snap ring to retain the sun gears.

REVERSE RANGE CLUTCH PLATE AND RING GEAR (MT-30 AND MT-31 MODELS)

Disassembly

1. Straighten the clutch plate retainer ring at either side of the plate, and remove the ring.
2. Lift the plate off the gear. Then straighten and remove the other ring.

Assembly

1. Engage the internal splines of the clutch plate with the external splines of the ring gear, and position the plate between the two grooves cut around the outside diameter of the ring gear.
2. Place a new clutch plate retainer ring in one of the two grooves and crimp the ring at five evenly spaced intervals around the gear. Be sure that the ring is installed well below the clutch plate surface. **Do not crimp the retainer ring at points where cutouts are made in the friction facings.**
3. Turn the assembly over and install a second new retainer ring in the same manner as the first ring.

LOW-RANGE AND REVERSE PISTON HOUSING OR INTERMEDIATE-RANGE PISTON HOUSING

Disassembly

1. Tap the edge of the housing on a wood block to loosen the pistons, then remove the pistons from the housings.
2. Remove the seal ring and seal ring expander from the outer groove of the piston, and the hook-type seal ring from the housing, or from the piston in the case of the intermediate-range piston.

To remove the teflon seals, loosely tie a piece of heavy cord around the seal. Then, twist a screwdriver into the cord and work the cord around the seal until the seal bulges out from the piston enough to insert a screwdriver under the seal. Remove the seal and expander from the piston.

Discarded teflon seals should not be disposed of by burning unless adequate ventilation is provided as certain harmful gasses are given off when seals are subjected to high temperatures.

Assembly

1. Install a new seal and expander in the outer groove of the piston, and a hook-type seal ring on the housing, or on the piston, in the case of the intermediate-range piston. Install the expander in the seal ring groove with the ends pointing toward the bottom of the groove. Retain the expander in the groove by hand and begin the installation of the seal into the groove at a point opposite the ends of the expander. Continue until the seal is fully seated. The use of tools is not recommended.
2. Lightly coat the seals with oil and install the piston, pushing them all the way into the housings. **Be careful not to damage the seals.**

LOW-RANGE RING GEAR AND INTERMEDIATE-RANGE PLANETARY CARRIER

Disassembly

1. Remove the internal-snap ring from the low-range ring gear, using a sharp pointed drift pin.
2. Lift out the intermediate-range planetary carrier.

Assembly

1. Mesh the external teeth of the planetary carrier with the internal teeth of the ring gear and push the carrier into the ring gear.
2. Install the internal-snap ring to hold the assembly together.

PROCEDURE FOR CHECKING RANGE CLUTCH CLEARANCES PRIOR TO TRANSMISSION ASSEMBLY

Check the clutch clearances if any pistons, piston housing, apply plates, reaction housings, Belleville springs, or clutch plates have been replaced in the low-range, intermediate-range or reverse clutches. Perform this check before assembling these clutches in the transmission housing, using the tool shown in Fig. 64. These clutches should be checked on every rebuild or

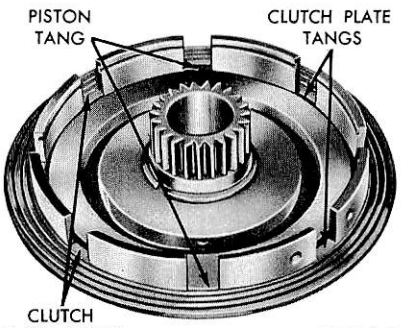

FIG. 66 Low-Splitter Clutch Plate Installation

disassembly to be certain they meet the proper clearance specifications of:

Low-Range
(3-plate)-0.020 to 0.030
(Single Plate)-0.010 to 0.015
Intermediate-Range
0.030 to 0.040
High-Range
(5-Plate)-0.030 to 0.040
(7-Plate)-0.040 to 0.050
Reverse-Range
(3-Plate)-0.020 to 0.030
(Single Plate)-0.010 to 0.015

Assembly of Clutches in Tool

1. Place the intermediate-range clutch reaction housing (yellow marked) in the tool with four of the slots adjacent to the four posts of the tool (Fig. 64).
2. Place an intermediate-range internally splined clutch plate in the intermediate-range reaction housing. Position the externally splined plate and the other internally splined plate. Install the intermediate-range clutch apply plate, the intermediate-range clutch Belleville spring with the convex side up, the intermediate-range clutch piston and the piston housing with the piston down.
3. Install the low-range clutch reaction housing with the slots up, the low-range clutch plate(s) and the low-range clutch apply plate with the flat side down.
4. Install the low-range Belleville spring with the convex side up, and then install the low-range and reverse piston and housing assembly with the red marking up (long piston hub down).
5. Install the reverse Belleville spring with the convex side down, and install the reverse clutch apply plate with the flat side up.
6. Install the reverse clutch plate(s), and then install the reverse clutch reaction housing with the slots down.
7. Place the top plate of the tool on the clutch stack, then install the tool bearing, flat washer, and the nut.
8. Use a 1 5/8-inch socket wrench to torque the nut to 30 ft-lbs. Make certain that all clutch parts are perfectly centered. Torque must cause metal-to-metal contact at outside diameters of piston housing and clutch plate reaction housings to insure accurate measurement of clutch clearance.

Checking Clutch Clearance

1. Use a small screwdriver to separate the plates, and then measure the clearances between the clutch friction plates and the clutch apply plates of the reverse clutch with a feeler gauge. This clearance should be 0.010-0.015 inch for single plate and 0.020-0.030 inch for three plate (Fig. 59).
2. Repeat this operation for the low-range clutch. The low-range clutch clearance should be 0.010-0.015 inch for single plate and 0.020-0.030 inch for three plate.
3. Check the intermediate-range clutch in the same way. The clearance should be 0.030-0.040 inch.
4. If the clutches do not have the specified clearances, it will be necessary to replace the apply plates. The apply plates are available for reverse, and low-ranges in nine thicknesses: 0.458-0.462, 0.465-0.469, 0.472-0.476, 0.312-0.316, 0.298-0.302, 0.284-0.288, 0.270-0.274, 0.291-0.295, and 0.277-0.281 inch. The intermediate-range apply plates are available in six thicknesses: 0.312-0.316, 0.302-0.298, 0.288-0.284, 0.270-0.274, 0.291-0.295 and 0.277-0.281 inch.
5. Measure the maximum thickness of the apply plate from the clutch stack and, by considering the clearance measurement taken while the stack is assembled, choose the correct plate to bring the clearance to specifications.
6. Establish the correct clutch clearance for the three ranges, then remove the clutch pack from the fixture and stack them on a bench in the reverse order. Now, each part may be selected in the correct order for assembly in the transmission housing.

SPECIFICATIONS

RANGE AND SPLITTER PLANETARY COMBINATION AND GEAR RATIOS

Range	Gear	Range Clutch Applied	Splitter Ratio	Output Ratio	Range	Gear	Range Clutch Applied	Splitter Ratio	Output Ratio
Low	1st	Low	Low	5.296:1	Drive	5th	High	Low	1.390:1
Low	2nd	Low	High	3.810:1	Drive	6th	High	High	1.000:1
Intermediate or Drive	3rd	Intermediate	Low	2.691:1	Neutral		None	Low	1.390:1 ①
Intermediate or Drive	4th	Intermediate	High	1.936:1	Reverse		Reverse	Low	6.046:1

① At Power Take-off Drive Gear

RANGES AND GEARS

Selector-Lever Position	Range	Gears In Range
1-2	Low	1st, 2nd
3-4	Intermediate	3rd, 4th
3-5	Drive	3rd, 4th, 5th
3-6	Drive	3rd,4th,5th,6th
N	Neutral	
R	Reverse	

PRESSURE CHECKS – ALL MODELS

Pressure Checks	FT ① (PSI) Model MT-40	FT ① (PSI) Model MT-41	FT ① (PSI) Model MT-42
First Converter	251	263	300
First Lockup	100	104	126
Second Lockup	100	104	126
Third Converter	251	263	300
Third Lockup	120	126	153
Fourth Lockup	100	104	126
Fifth Lockup	100	104	126
Sixth Lockup	100	104	126
Reverse Converter	251	263	300

① Full Transmission Throttle Valve

HYDRAULIC RETARDER HORSEPOWER ABSORPTION

Engine Speed (rpm)	Horsepower Absorption (hp)
2000	54
3000	164
3400	230

TRANSMATIC TRANSMISSION RANGE CLUTCH INSTALLED CLEARANCE

Clutch	Transmission Model	Clearance (Inches)
Reverse and Low Range	MT-40-41-42	0.020–0.030
Intermediate Range	MT-40-41-42	0.030–0.040
High Range	MT-40-41-42	0.040–0.050

IDENTIFICATION AND APPLICATION

Transmission Model	MT-40	MT-40	MT-42	MT-40	MT-41
Engine Application	361-EFW 391-EFY	175 CAT.	477EDM 534EDN	401EDL	200CAT.
Truck Model	C-750 C-CT-800 L-LT-LTS-LN-LNT-800	C-7000 L-LT-LTS-LN-LNT-8000	C-900 L-LT-LTS-900	C-900 L-LT-LTS-900	C-7000 8000 L-LT-LTS-LN-LNT-8000

GENERAL SPECIFICATIONS

Dry Weight (including Parking Brake)	510 lbs.
Front Pump Capacity	16 gpm at 2000 rpm
Power Take-Off Mountings	2 SAE Regular Duty
Power Take-off Drive Gear	57-Tooth, 6/8 Pitch
Power Take-off Drive Gear Maximum Speed	Engine Speed
Lubricant Capacity (less ..external system)	18 quarts (approx)

TRANSMATIC TRANSMISSION CLUTCH CLEARANCE (INCHES)

Clutch	MT-40		MT-42	
	New Dimension	Wear Limit	New Dimension	Wear Limit
Splitter low	0.010–0.068	–	0.010–0.068	–
Splitter High	0.025–0.071	–	0.022–0.064	–
High	0.040–0.050	0.070	0.040–0.050	0.070
Intermediate	0.030–0.040	0.050	0.030–0.040	0.050
Low	0.020–0.030	0.040	0.020–0.030	0.040
Reverse	0.020–0.030	0.040	0.020–0.030	0.040

TRANSMATIC TRANSMISSION WEAR LIMITS

Part No.	Models	Part Name	New Dimension (Inch)	Wear Limit (Inch)
6770678 or 6833906	All	Lockup Clutch Friction Plate	0.190–0.180	0.175
6770845	All	Lockup Clutch Piston Assembly	No Score Permissible 0.015 Cone Max.	
6756778	All	Lockup Clutch Backing Plate	No Score Permissible	
6772854	All	Splitter Low Clutch Plate	0.244–0.250	0.239
6773303 or 6835313	All	High and Splitter High Friction Plates	0.154–0.149	0.145
6770917	All	Splitter High Reaction Plate	0.095–0.091	0.005 Cone
6770917	MT-40, 41 & 42	High Reaction Plate	0.095–0.091	0.005 Cone
6769892	MT-40	Splitter High Backing Plate	0.300–0.290	0.003 Cone
6771753	MT-40, 41 & 42	Splitter High Backing Plate	0.240–0.236	0.003 Cone
6770765 or 6772093	All	High Backing Plate	0.296–0.298	0.003 Cone
6770766 or 6772094	All	High Backing Plate	0.304–0.306	0.003 Cone
6770767 or 6772095	All	High Backing Plate	0.312–0.314	0.003 Cone
6770768 or 6772096	MT-40, 41 & 42	High Backing Plate	0.320–0.322	0.003 Cone
6773305	All	Intermediate Clutch Friction Plate	0.156–0.150	0.145
6773305	MT-40, 41 & 42	Low and Reverse Clutch Friction Plate	0.156–0.150	0.145
6770265	All	Intermediate Clutch Apply Plate	0.316–0.312	0.010 Cone
6770266	All	Intermediate Clutch Apply Plate	0.302–0.298	0.010 Cone
6770267	All	Intermediate Clutch Apply Plate	0.288–0.284	0.010 Cone
6771436	All	Intermediate Clutch Apply Plate	0.295–0.291	0.010 Cone
6770268	All	Intermediate Clutch Apply Plate	0.274–0.270	0.010 Cone
6770265	MT-40, 41 & 42	Low and Reverse Clutch Apply Plates	0.316–0.312 ①	0.010 Cone
6770266	MT-40, 41 & 42	Low and Reverse Clutch Apply Plates	0.302–0.298 ①	0.010 Cone
6770267	MT-40, 41 & 42	Low and Reverse Clutch Apply Plates	0.288–0.284 ①	0.010 Cone
6830145	MT-40, 41 & 42	Low and Reverse Clutch Apply Plates	0.281–0.277 ①	0.010 Cone
6770268	MT-40, 41 & 42	Low and Reverse Clutch Apply Plates	0.274–0.270 ①	0.010 Cone
6771436	MT-40, 41 & 42	Low and Reverse Clutch Apply Plates	0.295–0.291 ①	0.010 Cone
6770264	All	Intermediate Clutch Reaction Plate	0.204–0.196	0.003 Cone
6770264	MT-40, 41 & 42	Low and Reverse Reaction Plate	0.204–0.196	0.003 Cone
–	All	I.D. of Side Plates in Stator Assembly	2.853–2.849	2.857
–	All	Stator Thrust Bearing in Stator Assembly (measure across face and Torrington needle bearing with bearing in installed position)	0.4561–0.4439	
6774847	All	O. D. of Race	2.8435–2.8425	2.841
6755581	All	Splitter Sun Gear to Carrier Thrust Washer	0.095–0.091	0.085
6769128	All	Thrust Washer	0.095–0.091	0.085
6769016	All	Thrust Washer	0.095–0.091	0.085
6772853	All	Thrust Washer	0.095–0.091	0.085
6772575 or 6772574	All	Front Oil Pump Assembly — Drive Gear Side Clearance	0.0005–0.0015	0.003
6772576 or 6772574	All	Front Oil Pump Assembly — Driven Gear Side Clearance	0.001–0.002	0.003
6772576 or 6772574	All	Diametral Clearance between the Front Pump Body and the O. D. of Driven Gear	0.005–0.008	0.010
6756782	All	Converter Cover (Bushing Running Clearance)	0.0005–0.0035	0.006
6756861	All	Ground Sleeve (Bushing Running Clearance)	0.0005–0.0035	0.005
6756822	All	Converter Output Shaft (Bushing Running Clearance)	0.0015–0.0045	0.007
6759975	All	Splitter High Housing (Sun Gear Bushing Running Clearance)	0.004–0.011	0.015
6756587		Splitter Planet Carrier Assembly (Journal)	(No Score Permissible)	
6756863	All	High Range Clutch Housing (Bushing Running Clearance)	0.0020–0.0045	0.008
67568351	All	Output Shaft (Bushing Running Clearance)	0.0015–0.0045	0.007

①Dimension from Belleville fulcrum to opposite face.

TRANSMATIC TRANSMISSION WEAR LIMITS

Torque Converter, Lockup Clutch, and Front Pump	Inches
Converter cover bushing-maximum clearance between bushing and turbine shaft	0.006
Lockup clutch plate-minimum thickness	0.175
Roller race-minimum O.D.	2.841
Stator thrust washer wear-front face	0.010
Transmission Rear Sub-Assemblies	**Inches**
Intermediate, low, and reverse clutch plates minimum thickness	0.145
Intermediate low reverse clutch apply plates-maximum coning	0.010
Splitter Mechanism, High-Range Clutch, and Power Take-Off Drive Gear	**Inches**
Turbine shaft bushing-maximum clearance between bushing and output shaft	0.007
Thrust washers-minimum thickness	0.085
Splitter planet carrier-no scoring permissible	
High-range and high-splitter internal teeth clutch plates-minimum thickness	0.145
Low-splitter clutch plate-minimum thickness	0.234

Torque Converter, Lockup Clutch, and Front Pump	Inches
Stator support bushing-maximum clearance between bushing and turbine shaft	0.005
Thrust washer-minimum thickness	0.085
Front pump driven gear-minimum O.D. (0.010 max. clearance)	4.743
Front pump gear side clearance	0.003
Transmission Rear Sub-Assemblies	**Inches**
Thrust washers-minimum thickness	0.085
Output shaft bushing-maximum clearance between bushing and splitter output shaft	0.010
Splitter Mechanism, High-Range Clutch, and Power Take-Off Drive Gear	**Inches**
High-range and high-splitter external teeth clutch and reaction plates-maximum coning	0.003
High-range clutch housing bushing-maximum clearance between bushing and diaphragm hub	0.008
Splitter sun gear bushing-maximum clearance between bushing and planet carrier	0.015
High-range, high-splitter and low-splitter clutch pistons-no scoring permissible	

TORQUE LIMITS

Description	Ft-Lbs
Screwdriver slotted screws	24-36 ①
Allen Head Set screw	8-12 ①
Front pitot screw	30-48 ①
Brake adjusting nut (1/4 - 20)	6-8
Filter can cover strap bolt	11-14
Manual selector shaft nut	14-17
Brake adjusting nut (7/16 - 14)	42-50
TV shaft nut	14-17
Converter pump nut	19-23
Oil sump pan bolt	15-18
Front oil pump bolt	15-18
Brake control valve body bolt 5/16-18 x 1 1/4	15-18
5/16-18 x 2 1/4	14-17
PTO cover bolt	15-20
Rear bearing retainer bolt	42-50
Converter housing bolt	42-50
Rear Pitot adapter (or pump) bolt	15-18
Brake assembly bolt (1/2-13)	67-80
(5/8-11)	164-192

Description	Ft-Lbs
Parking brake bracket bolt	42-50
Output flange bolt	83-100
Main valve body to housing bolt	4-6
Oil transfer plate to housing bolt	8-10
Downshift timing valve body to housing bolt	8-10
Converter ground sleeve bolt	17-20
Converter pump hub bolt	9-11
Rear pitot bolt	8-10
Anchor - Splitter low reaction plate bolt	20-23 ②
Anchor - High clutch diaphragm bolt	20-23 ②
Anchor - Intermediate piston housing bolt	20-23 ②
Anchor - Low and reverse piston housing bolt	20-23 ②
Anchor - Intermediate reaction plate-nut	65-75
-bolt	35-40
Anchor - Low reaction plate-nut	65-75
-bolt	35-40
Anchor - Reverse reaction plate-nut	65-75
-bolt	35-40

① Inch-Pounds

② These bolts are to be torqued to approximately 10 lb ft when assembled with mating parts into housing. After final torquing of rear bearing retainer bolts and converter housing bolts, loosen bolts and retighten to the **SPECIFIED** torque. **CAUTION:** The bolt on top of transmission is to be tightened after the two bolts are tightened in bottom of high clutch diaphragm.

SPECIAL TOOLS

Ford Tool No.	Former No.	Description
T50T-100-A	.....	Impact Hammer
T58L-101-A	.....	Puller Attachment
T57L-600-A	.....	Driver
T00L-1175 and	.....	Grease Seal Remover (Head Only)
T50T-100-A	.....	Seal Remover
T57T-7003-A7	.....	Stator Needle Bearing Installer

Ford Tool No.	Former No.	Description
T66T-7003-A (Details 1 thru 7	.....	Bushing Replacing Tools
J6795	Kent-Moore	Converter Pump Cover Removal
J6430	Kent-Moore	Splitter Removal
J6889	Kent-Moore	Guide Bolts
J6467	Kent-Moore	Range Clutch Holding Fixture
J3387-2	Kent-Moore	Guide Studs

Ford

Ford Marketing Corporation
Ford Customer Service Division
Service Technical Communications Department

Mark Corp
January 73 365-127-73A Litho in U.S.A.

Ford

1973 TRUCK SHOP MANUAL

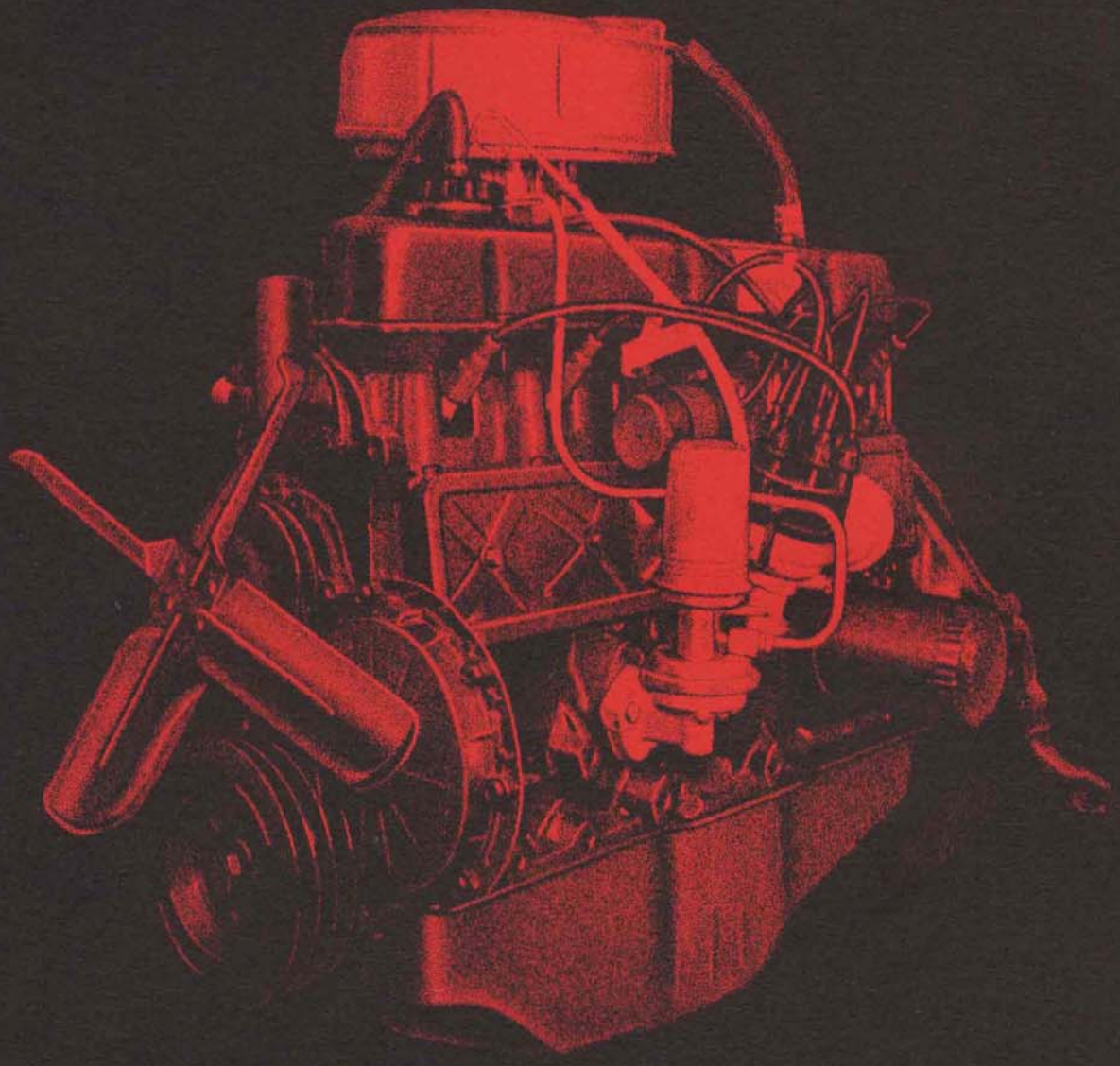

Volume 2

Engine

1973 TRUCK SHOP MANUAL

Volume II
Engine

Group Index

Vol. I		Identification Codes	10
		Wheels and Tires	11
		Brakes	12
		Steering	13
		Suspension	14
		Driving Axles and Drive Shafts	15
		Clutch and Manual Transmission	16
		Automatic Transmission	17
		Vehicle Identification	**20**
		Gasoline Engines	**21**
		Diesel Engines	**22**
		Ignition System	**23**
		Fuel System—Gasoline	**24**
		Fuel System—Diesel	**25**
		Exhaust System	**26**
		Cooling System	**27**
		Starting System	**28**
Vol. III & IV		Identification Codes	30
		Charging System	31
		Lighting System	32
		Instruments, Clusters and Controls	33
		Main Wiring Harnesses and Circuit Protection	34
		Auxiliary Equipment	35
		Ventilating, Heating and Air Conditioning	36
		Seats	41
		Window Glass and Mechanisms	42
		Stationary Window Glass	43
		Doors, Hood & Tailgate	44
		Interior Trim	45
		Tops	46
		Body Shell, Exterior Trim, Frame & Underbody	47
Vol. V		Maintenance and Lubrication	50

Ford Marketing Corporation
Ford Customer Service Division
Service Technical Communications Department

First Printing—January, 1973

© Ford Marketing Corporation, Dearborn, Michigan

FOREWORD

This manual is divided into five volumes: 1 – Chassis, 2 – Engine, 3 – and 4 – Electrical and Body, 5 – Maintenance and Lubrication. These volumes should provide Service Technicians with complete information covering normal service repairs on all 1973 model trucks built by the Ford Companies in the U. S. and Canada. As changes in the product occur, this information will be updated by Technical Service Bulletins. When issued, T.S.B. information always supersedes the information in the manual.

Information in each volume is grouped by system or component plus "General Service" part which contains information common to several similar components.

The table of contents on the first page of each volume indicates the general content of the book and provides a handy tab locator to make it easy to find the first page of each "Group." That page will contain an index to "Parts" and the first page of each "Part" contains a detailed index which gives page location for each service operation covered. Page numbers are consecutive in each "Part."

To make reference easier, information has been broken down into smaller units so that essentially there is now one "Part" for each component or system. Group numbers indicate the volume in which the group may be found.

Example: 11 – 02 – 21

Volume 1 – Group 11 – Part 02 – Page 21

The descriptions and specifications in this manual were in effect at the time this manual was approved for printing. Ford Marketing Corporation reserves the right to discontinue models at any time, or change specifications or design, without notice and without incurring obligation.

Ford Service Publications

Vehicle Identification

GROUP 20

GENERAL INFORMATION

VEHICLE CERTIFICATION LABEL

The Vehicle Certification Label (V.C. Label) is attached to the rear face of the driver's door. The upper half of the label contains the name of the manufacturer, the month and year of manufacture and the certification statement. The V.C. Label also contains the Vehicle Identification Number.

The remaining information codes on the V.C. Label are the same as the Truck Rating Plate Codes (Fig. 1). Vehicle codes shown on the Truck Rating Plate are explained in the following paragraphs.

RATING PLATE

Figure 1 illustrates a typical Truck Rating Plate. On light and medium cowl and windshield vehicles, the Rating Plate is mounted on the right side of the cowl top panel under the hood. On stripped Parcel Delivery vehicles, the rating plate is placed in an envelope and included in the Boxed Items parts. On Bronco models, the plate is mounted on the inside panel of the glove compartment door. On all other vehicles, the Rating Plate is mounted on the rear face of the left front door.

VEHICLE IDENTIFICATION NUMBER

The identification number is the first line of numbers and letters appearing on the Rating Plate (Fig. 1). The first letter and two numbers indicate the truck model and series (the letter prefix identifies the type of body or cab and the numbers are the first two numbers of a truck series). The letter following the truck series code designates the engine identification code. The letter following the engine identification code indicates the assembly plant at which the vehicle was built. The remaining numbers indicate the consecutive unit number. The charts that follow list the various vehicle identification number codes.

VEHICLE DATA

The Vehicle Data appears on the Rating Plate on the two lines following the identification number. The first three digits under W.B. designate the wheelbase in inches. The one or two letters under COLOR identify the exterior paint color (two letters designate a two-tone). The letter and three digits under MODEL designate the truck model within a series. The letter and numerals under BODY designate the interior trim and body type (the letter identifies the interior trim scheme and the numerals identify the body or cab type). The transmission installed in the vehicle is identified under TRANS by either a numeric or alphabetical code (if two symbols appear, the first identifies the auxiliary transmission, if so equipped, and the second symbol identifies the main transmission). A letter and a number or two numbers under AXLE identify the rear axle ratio (when required, a letter is

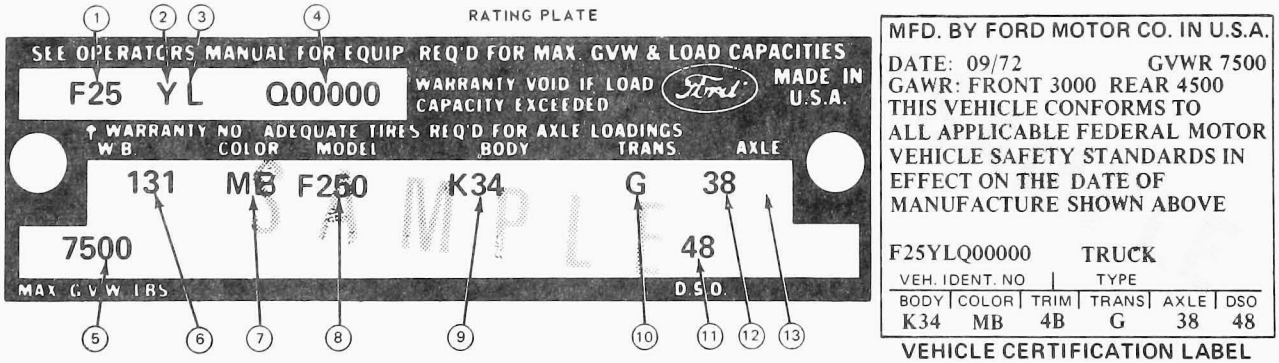

W1017-F

FIG. 1 Typical Truck Rating Plate and Vehicle Certification Label

also stamped behind the rear axle code to identify the front axle capacity). The maximum gross vehicle weight in pounds is stamped under MAX. G.V.W.

A two-digit number is stamped under D.S.O. to identify the district which ordered the vehicle. If the vehicle is built to special order (Domestic Special Order, Foreign Special Order, Limited Production Option, or other special order), the complete order number will also appear under D.S.O. The charts that follow list the various vehicle data codes.

W.B. (WHEELBASE)

The wheelbase in inches is entered in this space.

MAX. G.V.W. LBS

The maximum gross vehicle weight in pounds is recorded in this space.

D.S.O.

If vehicle is built on a **D.S.O., F.S.O., L.P.O.** (special orders) the complete order number will be reflected under the D.S.O. space including the District Code Number.

MODEL DESIGNATION (FIRST 3 CODE SYMBOLS – WARRANTY SERIAL NO. LINE)

U	Bronco	
	Basic Series	
U-14	U-100 (Pickup) 4 x 4	
U-15	U-100 (Wagon) 4 x 4	
E	Econoline	
	Basic Series	
	100 Series	
E-11	E-100 Club Wagon	
E-12	E-100 Custom Club Wagon	
E-13	E-100 Chateau Wagon	
E-14	E-100 Regular Van	
E-15	E-100 Window Van	
E-16	E-100 Display Van	
	200 Series	
E-21	E-200 Club Wagon	
E-22	E-200 Custom Club Wagon	
E-23	E-200 Chateau Wagon	
E-24	E-200 Regular Van	
E-25	E-200 Window Van	
E-26	E-200 Display Van	
	Bus Models	
E-27	E-200 Standard	
E-28	E-200 Custom	
E-29	E-200 Chateau	
E-30	Camper	
	300 Series	
E-31	E-300 Club Wagon	
E-32	E-300 Custom Club Wagon	
E-33	E-300 Chateau Wagon	
E-34	E-300 Regular Van	
E-35	E-300 Window Van	
E-36	E-300 Display Van	
	Bus Models	
E-37	E-300 Standard	
E-38	E-300 Custom	
E-39	Chateau	
V-80	LTS 800	(Gas)
V-90	LTS 900	

F		Conventional	(Gas)
K		Conventional	(Diesel)
	Chassis		
Pick-up	Cab	Basic Series	
F-10	F-17	F-100	
F-11	F-18	F-100 4 x 4	
F-25	F-27	F-250	
F-26	F-28	F-250 4 x 4	
F-35	F-37	F-350	
F-50		F-500	
F-60		F-600	
F-61		F-600	
F-65, F-66		F-600 4 x 4	
K-60		F-6000	(Diesel)
K-61		F-6000	(Diesel)
K-70		F-7000	(Diesel)
B		Bus	(Gas)
J		Bus	(Diesel)
B-50		B-500	
B-60		B-600	
B-61		B-600	
B-70		B-700	
B-75		B-750	
J-70		B-7000	(Diesel)
P		Parcel	(Gas)
G		Parcel	(Diesel)
P-35		P-350	
P-40		P-400	
P-50		P-500	
P-60		P-600	(DSO)
G-50		P-5000 (DSO)	(Diesel)
		Motor Home	(Gas)
M-35		M-350	(DSO)
M-40		M-400	(DSO)
M-50		M-500	(DSO)
Y-80		LTS 8000	(Diesel)
Y-90		LTS 9000	

F-70	F-700	
F-75	F-750	
F-80	L-800	
F-81	L-800	
F-90	L-900	
K-80	L-8000	(Diesel)
K-81	L-8000	
K-90	L-9000	
N-60	LN-600	
N-61	LN-600	
N-70	LN-700	(Gas)
N-75	LN-750	
N-80	LN-800	
N-90	LN-900	
R-60	LN-6000	
R-61	LN-6000	
R-70	LN-7000	(Diesel)
R-80	LN-8000	
R-81	LN-8000	
R-90	LN-9000	
S-80	LNT-800	
S-90	LNT-900	(Gas)
W-90	LNT-8000	
W-90	LNT-9000	(Diesel)
C-60	C-600	
C-61	C-600	
C-70	C-700	(Gas)
C-75, C-76	C-750	
C-80	C-800	
C-90	C-900	
D-60	C-6000	
D-70	C-7000	(Diesel)
D-80	C-8000	
T-80	LT-800	
T-90	LT-900	(Gas)
U-80	LT-8000	
U-90	LT-9000	(Diesel)
L-80	CT-800	
L-90	CT-900	(Gas)
Q-80	CT-8000	(Diesel)
Z-90	W-9000	
X-90	WT-9000	(Diesel)

CW1168-B

ENGINE CODES BRONCO, ECONO-CLUB WAGONS–PARCEL-SCHOOL BUS–LT & MED TRUCKS

Code	CID Engine	Cyl.
Gas (Bronco)		
T	200-1V	6
G	302-2V	8
Gas (Econoline)		
A	240-1V	6
G	302-2V	8
Gas (F100-250-350)		
A	240-1V	6
B	300-1V	6
G	302-2V	8
Y	360-2V	8
H	390-2V	8
J	460-4V	8
Gas		
B	300-1V	6
B (600 Series)	300-1V H.D.	6
C	330-2V	8
D	330-2V H.D.	8
E	361-2V	8
Diesel		
U	552 (V 150)	8
W	380	6
Gas (Parcel Delivery)		
A	240-1V	6
B	300-1V	6
Diesel (Detroit)		
K	353N	3 (DSO)
Gas (Low Compression Export)		
1	240-1V	6
2	300-1V H.D.	6
3	302-2V	8
4	330-2V H.D.	8
8	360-2V	8
5	361-2V	8

Heavy and Extra Heavy Truck-Series 700 through 9000
LN 500-9000 and C 500-900

Code	Cylinders	Engine CID	
A	6	240-1V	
B	6	300-1V	
C	8	330-2V M.D.	
D	8	330-2V H.D.	Gas

Heavy and Extra Heavy Truck Series 700 Through 9000
LN 500-9000 and C 500-900

Code	Cylinders	Engine CID	
E	8	361-2V	
F	8	391-4V	
H	8	401-4V	
K	8	477-4V	Gas
L	8	534-4V	
U	8	330-2V H.D.	Liquid
W	8	361-2v	Propane
9	8	534-4V	Gas
X	8	391-4V	(DSO)
1	6	240-1V	
3	8	330-2V M.D.	Gas
4	8	330-2V H.D.	Low
5	8	361-2V	Compression
B		903 Cummins V903	
C		636 Caterpillar-V8 225	
D		855 Cummins NTC-270	
E		903 Cummins V903-270	
F		855 Cummins NHCT-270	
G		903 Cummins V903-290	
J		855 Cummins NHC-250	
K		855 Cummins NHCT-270	
L		855 Cummins NHCT-270	
M		855 Cummins NTC-260	
N		855 Cummins NTC-280	
P		855 Cummins NTC-300	
Q		855 Cummins NTC-320	
B		855 Cummins NTC-335	Diesel
T		568 Detroit 8V-71N	
U		522 Caterpillar V8-150	
V		522 Caterpillar V8-175	
W		855 Cummins NTC-290	
X		927 Cummins N927	
Y		927 Cummins N927	
Z		927 Cummins N927	
1		855 Cummins NH-230	
2		426 Detroit 6-71N	
3		638 Caterpillar 1674	
4		573 Caterpillar V8-200	
5		855 Cummins NHCT-270	
6		568 Detroit 8V-71N	
7		568 Detroit 8V-7Nf	
8		318 Detroit 6V-53N	
9		855 Cummins NTC-350	
G		855 Cummins NTC-350	

CONSECUTIVE UNIT SERIAL NUMBERS
1972 CALENDAR YEAR PRODUCTION

Month	Through 600 Series	Heavy-Extra Heavy Series
August	Q00,000–Q09,999	Q10,000–Q19,999
September	Q20,000–Q29,999	Q30,000–Q39,999
October	Q40,000–Q49,999	Q50,000–Q59,999
November	Q60,000–Q69,999	Q70,000–Q79,999
December	Q80,000–Q89,999	Q90,000–Q99,999

ASSEMBLY PLANTS CODE LETTERS

Code	Assembly Plant
C	Ontario Truck
E	Mahwah
I	Highland Park
K	Kansas City
L	Michigan Truck

1973 CALENDAR YEAR PRODUCTION

Month	Through 600 Series	Heavy-Extra Heavy Series
January	R00,000–R09,999	R10,000–R19,999
February	R20,000–R29,999	R30,000–R39,999
March	R40,000–R49,999	R50,000–R59,999
April	R60,000–R69,999	R70,000–R79,999
May	R80,000–R89,999	R90,999–R99,999
June	S00,000–S09,999	S10,000–S19,999
July	S20,000–S29,999	S30,000–S39,999

ASSEMBLY PLANTS CODE LETTERS

Code	Assembly Plant
N	Norfolk
P	Twin Cities
R	San Jose
S	Allen Park
V	Kentucky Truck

CA1337-A

Gasoline Engines

GROUP 21

PART 21-01	PAGE
General Gasoline Engine Service	21-01-01
PART 21-11	
240 and 300 CID Six-Cylinder Engines	21-11-01
PART 21-21	
302 CID V-8 Engine	21-21-01
PART 21-23	**PAGE**
330, 360, 361, 390 and 391 CID V-8 Engines	21-23-01
PART 21-26	
401, 477 and 534 CID Super Duty V-8 Engines	21-26-01

PART 21-01 General Gasoline Engine Service

COMPONENT INDEX	Page
CAMSHAFT	
Cleaning and Inspection	01-18
End Play	01-07
Lobe Lift	01-04
Repair	01-13
CONNECTING RODS	
Cleaning and Inspection	01-19
COMPRESSION TEST	01-04
CORE PLUGS	
Removal and Installation	01-08
CRANKSHAFT	
Cleaning and Inspection	01-18
End Play	01-06
Repair	01-13
Vibration Damper and Sleeve	01-18
CRANKSHAFT REAR OIL SEAL	
Removal and Installation	01-09
CYLINDER BLOCK	
Cleaning and Inspection	01-20
Repair	01-15
CYLINDER HEAD	
Valve Guides	01-12
Valve Seats	01-12
EXHAUST CONTROL VALVE	
Removal and Installation	01-08
EXHAUST MANIFOLD	
Cleaning and Inspection	01-16
FLYWHEEL FACE RUNOUT	
Automatic Transmissions	01-06
Manual Transmissions	01 06
FLYWHEEL RING GEAR	
Inspection	01-19
Removal and Installation	01-09
FUEL PUMP ECCENTRIC	
Cleaning and Inspection	01-18
GENERAL INFORMATION	01-02
HYDRAULIC VALVE LIFTER	
Cleaning and Inspection	01-18
Testing	01-05
INTAKE MANIFOLD	
Cleaning and Inspection	01-15
MAIN AND CONNECTING ROD BEARINGS	
Cleaning and Inspection	01-20
Fitting With Plastigage	01-13

PART 21-01 General Gasoline Engine Service

COMPONENT INDEX	Page
OIL PAN	
Cleaning and Inspection	01-20
OIL PUMP	
Cleaning and Inspection	01-21
PISTONS, PINS, AND RINGS	
Cleaning and Inspection	01-19
Repair	01-14
POSITIVE CLOSED – TYPE VENTILATION SYSTEM	
Cleaning	01-21
Testing	01-06
PUSH RODS	
Cleaning and Inspection	01-16
Repair	01-15
SOLID TAPPETS	
Cleaning and Inspection	01-18
SPECIAL SERVICE TOOLS	01-22
TIMING CHAIN AND SPROCKETS	
Cleaning and Inspection	01-07
Deflection	01-07
TIMING GEAR	
Backlash	01-07
Cleaning and Inspection	01-18
Runout	01-07
VALVE ROCKER ARM	
Cleaning and Inspection	01-16
Repair	01-14
Stud Nut Replacement	01-08
Stud Replacement	01-08
VALVES	
Refacing	01-13
Select Fitting	01-13

GENERAL INFORMATION

This part covers engine tests adjustment and repair procedures. In addition, the cleaning and inspection procedures are covered.

For engine removal, disassembly, assembly installation and major repair procedures, refer to the applicable engine part.

An engine identification tag is attached to the engine. The symbol code (Fig. 1) identifies each engine for determining parts usage; i.e., engine cubic inch displacement and model year. The change level and engine code number determine if parts are peculiar to a specific engine. The engine plant code designates where and when the engine was built. **It is imperative that the codes on the engine identification tag be used when ordering parts or making inquiries about the engine. The pertinent codes are shown in the Master Parts Catalog to designate unique parts.**

The 1973 engines incorporate Imco exhaust emission control system or a nonexhaust emission control system.

The Imco system is designed to reduce the hydrocarbon and carbon monoxide content of the gasoline engine exhaust gases. By controlling the amount of contaminants emitted through the exhaust system to an acceptable minimum, air polution is reduced.

When making carburetor idle fuel mixture and speed adjustments, follow the procedures in Group 24.

The Imco exhaust emission control system uses a specially-calibrated carburetor and distributor in conjunction with retarded ignition timing at idle speeds. This reduces the exhaust contaminants by burning them within the cylinder combustion chamber before reaching the exhaust manifold.

ENGINE IDENTIFICATION TAG

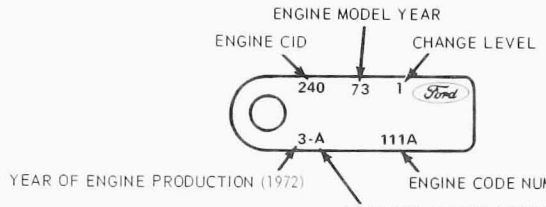

Engine Codes																											
Conventional	Low Compression	Gasoline Engines CID	Bronco		Econoline Parcel–350-400-500 F-100-250-350-500 LN-500 B-500		Parcel–350-400-500 F-100-250-350-500 LN-500 B-500		C-500-600 F-B-LN-600		Bronco Econoline F-100		C-600 B-700 F-LN-B-500-600		F-LN-B-C-600-700 LT-LNT-800		F-100-250-350		F-LN-B-C-600-700-750 L-LN-C-LT-LNT-CT-800		LTS-800 F-LN-B-C-750 L-LN-C-LT-LNT-CT-800		LTS-900 L-LN-C-LT-LNT-CT-900	
T	6	200-1V	F																					
A	1	240-1V			A	1																		
B		300 LD-1V					B																	
B	2	300 HD-1V							B	2														
G	7	302-2V									G	7												
C	3	330-2V											C	3										
D	4	330 HD-2V													D	4								
Y	8	360-2V															Y	8						
E	5	361-2V																	E	5				
H		390-2V															H							
F		391-4V																			F			
H		401-4V																					H	
J		460-4V															J							
K		477-4V																					K	
L		534-4V																					L	

A3488-C

FIG. 1 Engine Identification

DIAGNOSIS AND TESTING

Refer to the Truck Diagnosis Manual for all diagnosis procedures.

CAMSHAFT LOBE LIFT

Check the lift of each lobe in consecutive order and make a note of the readings.

1. Remove the air cleaner. Remove the heater hose and crankcase ventilation hose. Remove valve rocker arm cover(s).
2. Super Duty Engines with mechanical valve lifters: if only one camshaft lobe is to be checked, loosen the valve rocker arm adjusting screw. Slide the rocker arm assembly serving the camshaft lobe to be checked to one side. Secure it in this position. To move the rocker arm on either end of the shaft, remove the retaining pin and washers, and slide the rocker arm off the shaft. Repeat this procedure on other lobes to be checked. Never remove the rocker arm pedestal attaching bolts and rocker arm shaft to check camshaft lobe lift on the Super Duty Engines. **Removing the rocker arm attaching bolts will cause torque loss of the cylinder head and will necessitate cylinder head gasket replacement.**

On 330, 360, 361, 390 and 391 CID engines with hydraulic valve lifters, remove the valve rocker arm shaft assembly(ies) and install a solid, tappet-type push rod in the push rod bore of the camshaft lobe to be checked or use the adapter for ball end push rods shown in Fig. 2.

On a 240 or 300 Six, remove the rocker arm stud nut, fulcrum seat and rocker arm. Use the adapter for ball end push rods.

3. Make sure the push rod is in the valve lifter socket. Install a dial indicator so that the actuating point of the indicator is in the push rod socket (or the indicator ball socket adapter is on the end of the push rod) and in the same plane as the push rod movement (Fig. 3 or 4).
4. Disconnect the brown lead (I terminal) and the red and blue lead (S terminal) at the starter relay. Install an auxiliary starter switch between the battery and S terminals of the starter relay. Crank the engine with the ignition switch OFF.

Turn the crankshaft over until the tappet or lifter is on the base circle of the camshaft lobe. At this point, the push rod will be in its lowest position.

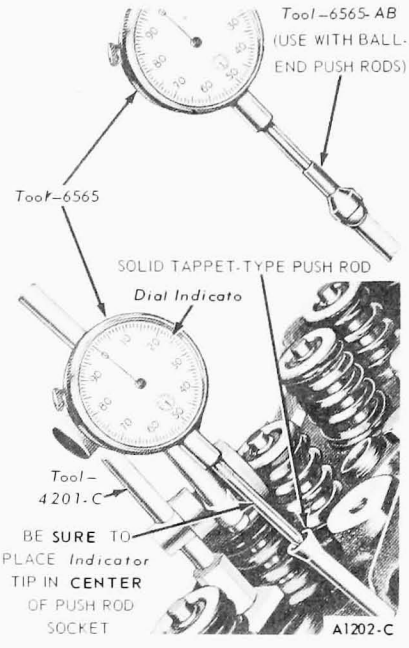

FIG. 2 Typical Camshaft Lobe Lift Hydraulic Valve Lifters—V-8 Engines

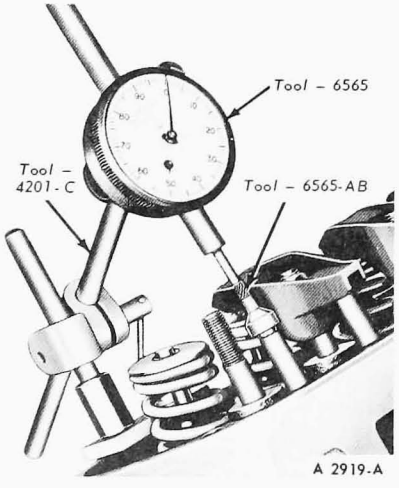

FIG. 3 Typical Camshaft Lobe Lift—240 and 300 Six Engines

5. Zero the dial indicator. Continue to rotate the crankshaft slowly until the push rod is in the fully raised position.
6. Compare the total lift recorded on the indicator with specification.
7. To check the accuracy of the original indicator reading, continue to rotate the crankshaft until the indicator reads zero. If the lift on any lobe is below specified wear limits, the camshaft and the valve lifters operating on the worn lobe(s) must be replaced.
8. Remove the dial indicator and auxiliary starter switch.

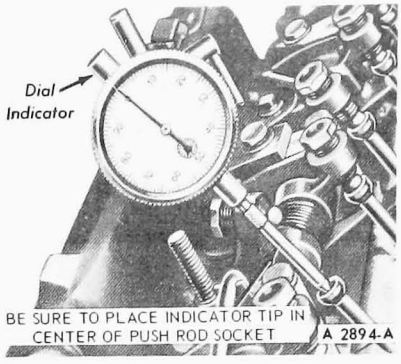

FIG. 4 Typical Camshaft Lobe Lift—Mechanical Tappets

On Super Duty Engines, position the valve rocker arm. If an end valve rocker arm was removed, slide it into position on the shaft, and install the washers and retaining pin. Tighten the valve clearance adjusting screw to hold the rocker arm and push rod in alignment. Adjust the valve clearance on all rocker arms that had been moved out of position. Install the valve rocker arm cover(s) and partially tighten the attaching bolts. Operate the engine until normal operating temperature has been reached. Remove the valve rocker arm cover(s). Check and adjust the valve clearance.

On 330, 360, 361, 390 and 391 CID engines install the valve rocker arm shaft assembly(ies).

On a 240 or 300 Six, install the rocker arm, fulcrum seat and stud nut. Adjust the valve clearance

9. Install the valve rocker arm cover(s) and the air cleaner.

COMPRESSION TEST

The following procedure is to be used on all engines when checking compression:

1. Be sure the crankcase oil is of the correct viscosity and make sure that the battery is properly charged. Operate the engine for a minimum of 30 minutes at 1200 rpm, or until the engine is at normal operating temperature. Turn the ignition switch off; then remove all the spark plugs.

2. Set the carburetor throttle plates in the wide open position.
3. Install a compression gauge in No. 1 cylinder.
4. Crank the engine (with the ignition switch off) at least five (5) pumping strokes and record the highest reading indicated. Note the approximate number of compression strokes required to obtain the highest reading.
5. Repeat the check on each cylinder cranking the engine approximately the same number of compression strokes.

The indicated compression pressures are considered normal if the lowest reading cylinder is within 75 percent of the highest. Refer to the quick reference chart Fig. 5 for pressure limits between cylinders. Variations exceeding 75 percent implies an improperly seated valve or worn or broken piston rings. If one, or more, cylinders read low-squirt approximately one (1) tablespoon of engine oil on top of the pistons in the low reading cylinders. Repeat compression pressure check on these cylinders.

a. If compression improves considerably, the piston rings are at fault.
b. If compression does not improve, valves are sticking or seating poorly.
c. If two adjacent cylinders indicate low compression pressures and squirting oil on the pistons does not increase the compression, the cause may be a cylinder head gasket leak between the cylinders. Engine oil and/or coolant in the cylinders could result from this problem.

EXAMPLE

After checking the compression pressures in all cylinders, the highest reading obtained was 140 psi and the lowest pressure reading was 100 psi. By locating 140 in the Maximum column it is seen that the lowest allowable pressure listed in the Minimum column is 105 psi. Since the lowest cylinder reading was 100 psi, the engine is within specifications and the compression is considered satisfactory.

Maximum PSI	Minimum PSI	Maximum PSI	Minimum PSI
134	101	194	145
136	102	196	147
138	104	198	148
140	105	200	150
142	107	202	151
144	108	204	153
146	110	206	154
148	111	208	156
150	113	210	157
152	114	212	158
154	115	214	160
156	117	216	162
158	118	218	163
160	120	220	165
162	121	222	166
164	123	224	168
166	124	226	169
168	126	228	171
170	127	230	172
172	129	232	174
174	131	234	175
176	132	236	177
178	133	238	178
180	135	240	180
182	136	242	181
184	138	244	183
186	140	246	184
188	141	248	186
190	142	250	187
192	144		

CA1340-A

FIG. 5 Quick Reference Compression Pressure Limit Chart

HYDRAULIC VALVE LIFTER

Dirt, deposits of gum and varnish and air bubbles in the lubricating oil can cause hydraulic valve lifter failure or malfunction.

Dirt, gum and varnish can keep a check valve from seating and cause a loss of hydraulic pressure. An open valve disc will cause the plunger to force oil back into the valve lifter reservoir during the time the push rod is being lifted to force the valve from its seat.

Air bubbles in the lubricating system can be caused by too much oil in the system or too low an oil level. Air may also be drawn into the lubricating system through an opening in a damaged oil pick-up tube. Air in the hydraulic system can cause a loss of hydraulic pressure.

Assembled valve lifters can be tested with Tool 6500-E to check the leak down rate. The leak down rate specification is the time in seconds for the plunger to move the length of its travel while under a 50 lb load. Test the valve lifters as follows:

1. Disassemble and clean the lifter to remove all traces of engine oil. Lifters cannot be checked with engine oil in them. Only the testing fluid can be used.
2. Place the valve lifter in the tester, with the plunger facing upward. Pour hydraulic tester fluid into the cup to a level that will cover the valve lifter assembly. The fluid can be purchased from the manufacturer of the tester. Do not use kerosene, for it will not provide an accurate test.

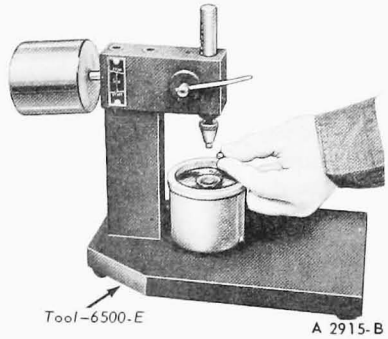

FIG. 6 Placing Steel Ball in Valve Lifter Plunger

3. Place a 5/16 inch steel ball in the plunger cup (Fig. 6).
4. Adjust the length of the ram so that the pointer is 1/16 inch below the starting mark when the ram contacts the valve lifter plunger (Fig. 7) to facilitate timing as the pointer passes the start timing mark.

Use the center mark on the pointer scale as the stop timing point instead of the original stop timing mark at the top of the scale.

5. Work the valve lifter plunger up and down until the lifter fills with fluid and all traces of air bubbles have disappeared.
6. Allow the ram and weight to force the valve lifter plunger downward. Measure the exact time it takes for the pointer to travel from the start timing to the stop timing marks on the tester.
7. A valve lifter that is satisfactory must have a leak-down rate (time in seconds) within the minimum and maximum limits specified.
8. If the valve lifter is not within specifications, replace it with a new lifter. It is not necessary to test a new lifter before installing it in the engine.

CRANKCASE VENTILATION SYSTEM OPERATION TEST

This test is performed with the crankcase ventilation tester, C8AZ6B627-A (Fig. 8) which is operated by the engine vacuum through the oil fill opening. Follow the procedures described below to install the tester and check the crankcase ventilation system for faulty operation.

1. With the engine at normal operating temperature, remove the oil filler cap.
2. Hold the tester C8AZ6B627-A over the opening in the valve cover. Make sure the surface is flat to form a seal between the cover and tester. If the cover is distorted, shape it as required to make an air tight seal. An air leak between the cover and tester will render the tester inoperative or give an erroneous reading.
3. Start the engine and allow it to operate at the recommended idle speed.
4. Hold the tester over the oil filler cap opening making sure that there is a positive seal between the tester and cover.
5. If the ball settles in the Good (green) area, the system is functioning properly. If the ball settles in the Repair (red) area, clean or replace the malfunctioning components as required.
6. Repeat the test after repairs are made to make sure that the crankcase ventilation system is operating satisfactorily.

Regulator Valve Test

Install a known good regulator valve in the crankcase ventilation system.

Start the engine and compare the engine idle condition to the prior idle condition.

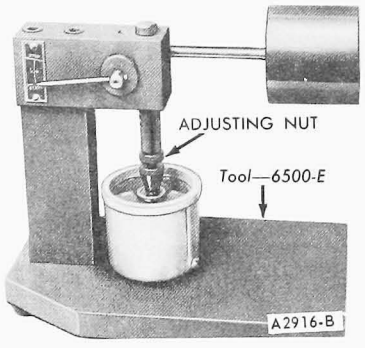

FIG. 7 Adjusting Ram Length

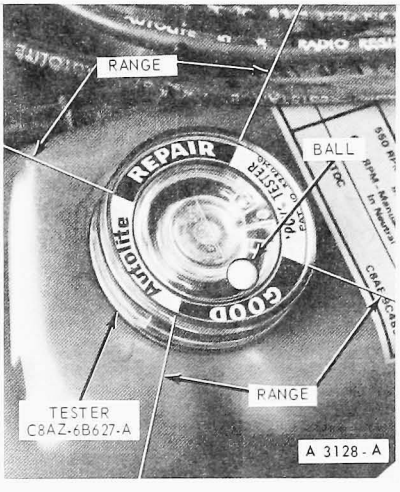

FIG. 8 Crankcase Ventilation System Tester

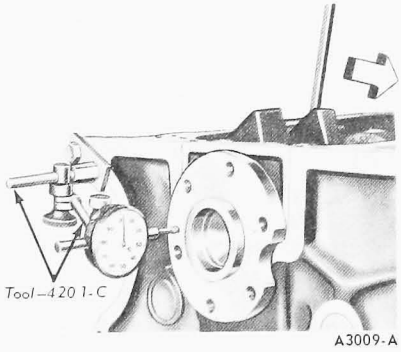

FIG. 9 Checking Crankshaft End Play

If the loping or rough idle condition remains when the good regulator valve is installed, the crankcase ventilation regulator valve is not at fault. Check the crankcase ventilation system for restriction at the intake manifold or carburetor spacer. If the system is not restricted, further engine component diagnosis will have to be conducted to find the malfunction.

If the idle condition is found to be satisfactory, leave the new regulator valve installed and clean the hoses, fittings, etc.

CRANKSHAFT END PLAY

1. Force the crankshaft toward the rear of the engine.
2. Install a dial indicator so that the contact point rests against the crankshaft flange and the indicator axis is parallel to the crankshaft axis (Fig. 9).
3. Zero the dial indicator. Push the crankshaft forward and note the reading on the dial.
4. If the end play exceeds the wear limit, replace the thrust bearing. If the end play is less than the minimum limit, inspect the thrust bearing faces for scratches, burrs, nicks, or dirt. If the thrust faces are not damaged or dirty, they probably were not aligned properly. Install the thrust bearing and align the faces following the procedure recommended under Main Bearing Replacement in the pertinent engine section. Check the crankshaft end play.

FLYWHEEL FACE RUNOUT—MANUAL-SHIFT TRANSMISSION

Install a dial indicator so that the indicator point bears against the flywheel face (Fig. 10). Turn the flywheel making sure that it is full forward or rearward so that crankshaft end play will not be indicated as flywheel runout.

If the clutch face runout exceeds specifications, remove the flywheel and check for burrs between the flywheel and the face of the crankshaft mounting flange. If no burrs exist, check the runout of the crankshaft mounting flange. Replace the flywheel or machine the crankshaft-flywheel mounting face if the mounting face flange runout is excessive. If the ring gear runout exceeds specifications, replace it or reinstall it on the flywheel. Refer to Ring Gear Replacement for the proper procedure.

FLYWHEEL RUNOUT—AUTOMATIC TRANSMISSION

Remove the spark plugs.

Install a dial indicator so that the indicator point rests on the face of the ring gear adjacent to the gear teeth.

Push the flywheel and crankshaft forward or backward as far as possible to prevent crankshaft end play from being indicated as flywheel runout.

Set the indicator dial on the zero mark. Turn the flywheel one complete revolution while observing the total indicator reading (TIR). If the TIR exceeds specifications, the flywheel and ring gear assembly must be replaced.

CAMSHAFT END PLAY

On all V-8 engines, prying against the aluminum-nylon camshaft sprocket, with the valve train load on the camshaft, can break or damage the sprocket. Therefore, the rocker arm adjusting nuts must be backed off, or the rocker arm and shaft assembly must be loosened sufficiently to free the camshaft (330, 360, 361, 390 and 391 only).**Do not loosen Super Duty Engine rocker arm pedestal attaching bolts.** After checking the camshaft end play, adjust the valve clearance.

Push the camshaft toward the rear of the engine. Install a dial indicator so that the indicator point is on the camshaft sprocket attaching screw (Fig. 11). Zero the dial indicator. Position a large screwdriver between the camshaft gear and the block. Pull the camshaft forward and release it. Compare the dial indicator reading with the specifications.

If the end play is excessive, check the spacer for correct installation before it is removed. If the spacer is correctly installed, replace the thrust plate.

Remove the dial indicator.

TIMING CHAIN DEFLECTION

1. Rotate the crankshaft in a counterclockwise direction (as viewed from the front) to take up the slack on the left side of the chain.
2. Establish a reference point on the block and measure from this point to the chain (Fig. 12).
3. Rotate the crankshaft in the opposite direction to take up the slack on the right of the chain. Force the left side of the chain out with the fingers and measure the distance between the reference point and the chain. The deflection is the difference between the two measurements.

If the deflection exceeds specifications, replace the timing chain and sprockets.

TIMING GEAR BACKLASH

Install a dial indicator on the cylinder block (Fig. 13). Check the backlash between the camshaft gear and the crankshaft gear with a dial indicator. Hold the gear firmly against the block while making the check. Refer to specifications for the backlash limits.

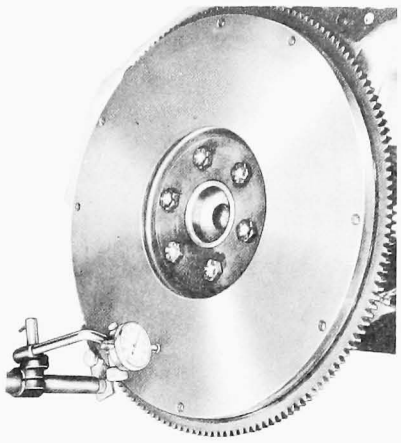

A3111-A

FIG. 10 Checking Flywheel Face Runout

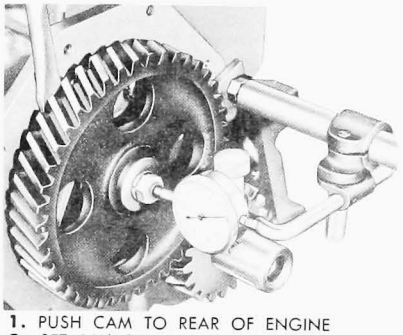

1. PUSH CAM TO REAR OF ENGINE
2. SET *Dial* ON ZERO
3. PULL CAM FORWARD AND RELEASE

A3010-A

FIG. 11 Checking Camshaft End Play

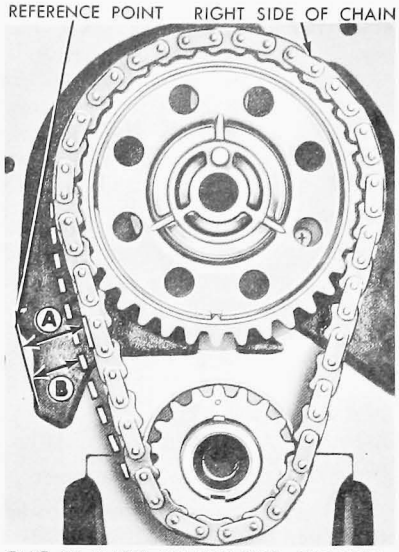

TAKE UP SLACK ON LEFT SIDE, ESTABLISH REFERENCE POINT. MEASURE DISTANCE **A.** TAKE UP SLACK ON RIGHT SIDE. FORCE LEFT SIDE OUT. MEASURE DISTANCE **B.** DEFLECTION IS **A** MINUS **B.**

A 2906-A

FIG. 12 Checking Timing Chain Deflection

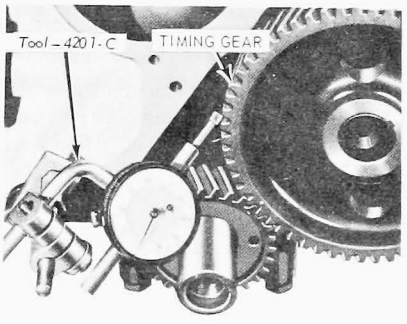

A2923-C

FIG. 13 Checking Timing Gear Backlash

TIMING GEAR RUNOUT

Install a dial indicator on the cylinder block as shown in Fig. 14. Hold the camshaft gear against the camshaft thrust plate, and zero the indicator. Rotate the crankshaft to turn the camshaft, while holding the camshaft gear against the thrust plate. Check the gear runout through one complete revolution of the camshaft. If the gear runout exceeds specifications, remove it and check for burrs or foreign particles on or between the camshaft and gear joining flanges. Check the runout. If it still exceeds specifications, replace both gears.

Follow the above procedure to check crankshaft gear runout.

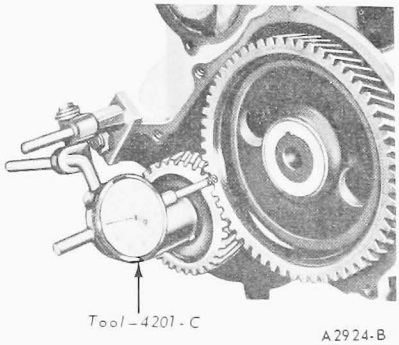

A2924-B

FIG. 14 Checking Timing Gear Runout

REMOVAL AND INSTALLATION

ROCKER ARM STUD NUT REPLACEMENT—240 SIX AND 302 V-8

If the rocker arm stud nut breakaway torque is less than specified, install a new standard stud nut and recheck the breaking torque. Refer to Valve Clearance Adjustment in Part 21-04 for the torque procedure.

ROCKER ARM STUD REPLACEMENT—240 SIX, AND 302 V-8

If it is necessary to remove a rocker arm stud, Tool Kit T62F-6A527-B is available which contains the following: a stud remover, a 0.006 inch oversize reamer and a 0.015 inch oversize reamer. For 0.010 inch oversize studs, use reamer T66P-6A527-B. To press in replacement studs, use stud replacer T64P-6A527-A on a 240 or 302 engine.

Rocker arm studs that are broken or have damaged threads may be replaced with standard studs. Loose studs in the head may be replaced with 0.006, 0.010 or 0.015 inch oversize studs which are available for service.

Standard and oversize studs can be identified by measuring the stud diameter within 1 1/8 inch from the pilot end of the stud. The stud diameters are:

0.006 oversize...0.3774-0.7781
0.010 oversize...0.3814-0.3821
0.015 oversize...0.3864-0.3871

When going from a standard size rocker arm stud to a 0.010 or 0.015 inch oversize stud, always use the 0.006 inch oversize reamer before finish reaming with the 0.010 or 0.015 inch oversize reamer.

1. Position the sleeve of the rocker arm stud remover (Tool T62F-6A527-B) over the stud with the bearing end down. When working on a 302 cylinder head, cut the threaded part of the stud off with a hack saw. This is necessary due to the puller being designed for 3/8 inch studs and will not grip the 5/16 inch thread on a 302 CID cylinder head stud. Thread the puller into the sleeve and over the stud until it is fully bottomed. Hold the sleeve with a wrench, then rotate the puller clockwise to remove the stud (Fig. 15).

If the rocker arm stud was broken off flush with the stud boss, use an easy-out to remove the broken stud following the instructions of the tool manufacturer.

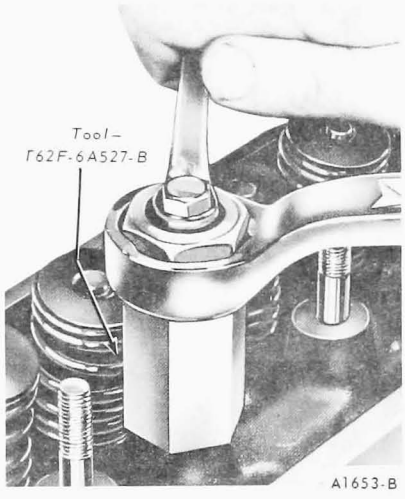

FIG. 15 Removing Rocker Arm Stud—240 Six and 302-W V-8

2. If a loose rocker arm stud is being replaced, ream the stud bore using the proper reamer (or reamers in sequence) for the selected oversize stud (Fig. 16). **Make sure the metal particles do not enter the valve area.**
3. If working on a 240 or 302 CID engine, thread the new stud into the sliding driver of the rocker arm stud installer (T65P-6A527-A) and coat the end of the stud with Lubriplate. Align the stud and installer with the stud bore, then tap the sliding driver until it bottoms (Fig. 17). When the installer contacts the stud boss, the stud is installed to its correct height. This applies to a 240 or 302 engine only.

EXHAUST CONTROL VALVE—240 AND 300 LD SIX

Removal

1. Separate the intake and exhaust manifolds.
2. Remove the valve tension spring and the thermostatic spring from the exhaust control valve shaft (Fig. 18).
3. Remove the stop pin spring from the manifold.
4. Using an actylene torch inside the manifold, cut the shaft on both sides of the valve plate.
5. Remove the valve plate, shaft and flat washer.
6. Remove the expansion plug from the control valve shaft bushing bore.
7. Remove the exhaust control valve bushings from the manifold. These bushings come in two sizes each, both front and rear. To determine which bushings should be used, measure the outside diameter of the removed bushings. Replace with the proper parts (Fig. 19).

Installation

1. Install the new control valve bushings. The inner end of the smaller bushing should be 0.010-0.015 inch below the inner surface of the exhaust manifold. The inner end of the larger bushing should be 0.020 inch above the inner surface of the exhaust manifold.
2. Ream the bushings to 0.251-0.253 inch ID.
3. Slide the new shaft into the bushings, flat washer and valve plate. The flat washer must be between the valve plate and the large bushing.
4. Install a new stop pin spring on the stop pin.
5. Position the exhaust control valve at an 84 degree angle with the top surface of the manifold (Fig. 20).
6. Rotate the counterweight and shaft assembly clockwise until the counterweight contacts the stop pin spring. Place a 0.030 inch feeler gauge between the counterweight and manifold to maintain the specified clearance while welding.
7. With the plate and counterweight in position, use stainless steel welding rod to tack-weld the valve plate to the shaft.
8. Move the assembly back and forth to check for a binding condition. If there is no binding condition, securely weld the valve plate to the shaft.
9. Install the expansion plug in the manifold bushing bore.
10. Position the new thermostatic spring on the shaft and counterweight assembly so that it will be necessary to wind the spring approximately 1/2 turn in the clockwise direction to hook the open end over the stop pin. Use a 5/16 inch ID piece of tubing to slide the thermostatic spring on the shaft and counterweight assembly. Wind the spring clockwise and hook it over the stop pin.
11. Install a new valve tension spring on the exhaust control valve shaft and the stop pin.

CORE PLUGS

REMOVAL

To remove a large core plug, drill a 1/2 inch hole in the center of the plug

and remove with a clutch pilot bearing puller (Tool T59L-100-B and T58L-101-A) or pry it out with a large drift punch. On a small core plug, drill a 1/4 inch hole in the center of the plug and pry it out with a small pin punch. Clean and inspect the plug bore.

Prior to installing a core plug the plug bore should be inspected for any damage that would interfere with the proper sealing of the plug. If the bore is damaged it will be necessary to true the surface by boring for the next specified oversize plug.

Oversize (OS) plugs are identified by the OS stamped in the flat located on the cup side of the plug.

Coat the plug and/or bore lightly with an oil-resistant (oil galley) or water-resistant (cooling jacket) sealer and install it following the procedure for cup type or expansion type below:

INSTALLATION

Cup-Type

Cup-type core plugs (Fig. 21) are installed with the flanged edge outward. The maximum diameter of this plug is located at the outer edge of the flange. The flange on cup-type plugs flares outward with the largest diameter at the outer (sealing) edge.

It is imperative to pull the plug into the machined bore by using a properly designed tool. Under no circumstances is the plug to be driven into the bore using a tool that contacts the flange. This method will damage the sealing edge and will result in leakage and/or plug blow out.

The flanged (trailing) edge must be below the chamfered edge of the bore to effectively seal the plugged bore.

If the core plug replacing tool has a depth seating surface, do not seat the tool against a non-machined (casting) surface.

Expansion-Type

Expansion-type core plugs (Fig. 21) are installed with the flanged edge inward. The maximum diameter of this plug is located at the base of the flange with the flange flaring inward.

It is imperative to push or drive the plug into the machined bore using a properly designed tool. Under no circumstances is the plug to be driven using a tool that contacts the crowned portion of the plug. This method will expand the plug prior to installation and may damage the plug and/or plug bore.

When installed the trailing (maximum) diameter must be below the chamfered edge of the bore to effectively seal the plugged bore.

If the core plug replacing tool has a depth seating surface, do not seat the tool against a non-machined (casting) surface.

FLYWHEEL RING GEAR—MANUAL-SHIFT TRANSMISSION

Removal

To replace a damaged or worn ring gear, heat the ring gear with a blow torch on the engine side of the gear, and knock it off the flywheel. **Do not hit the flywheel when removing the ring gear.**

Installation

Heat the new ring gear evenly until the gear expands enough to slip onto the flywheel. Make sure the gear is seated properly against the shoulder. **Do not heat any portion of the gear to a temperature higher than 500 degrees F. If this limit is exceeded, the temperature will be removed from the ring gear teeth.**

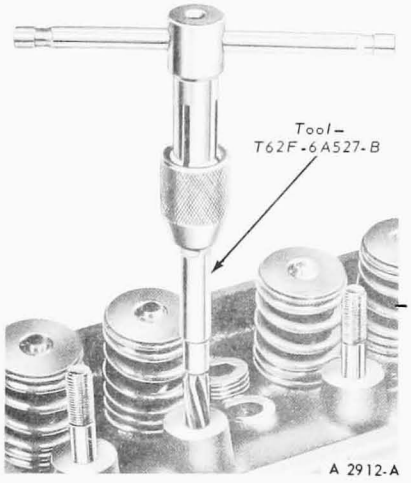

FIG. 16 Reaming Rocker Arm Stud—240 Six and 302 V-8

CRANKSHAFT REAR OIL SEAL

A split-lip type crankshaft rear oil seal is provided for servicing all 1973 engines except 240 and 300 CID. The complete seal is replaced without removing the crankshaft.

Removal

1. Remove the oil pan and the oil pump (if required).
2. Loosen all the main bearing cap bolts, thereby lowering the crankshaft slightly but not to exceed 1/32 inch.
3. Remove the rear main bearing cap, and remove the oil seal from the bearing cap and cylinder block. On the block half of the seal use a seal removal tool, or install a small metal screw in one end of the seal, and pull on the screw to remove the seal. **Exercise caution to prevent scratching or damaging the crankshaft seal surfaces.**
4. Remove the oil seal retaining pin from the bearing cap if so equipped. **The pin is not used with the split-lip seal.**

Installation

1. Carefully clean the seal groove in the cap and block with a brush and solvent.
2. Dip the split lip-type seal halves in clean engine oil.
3. Carefully install the upper seal (cylinder block) into its groove with undercut side of seal toward the FRONT of the engine (Fig. 22), by rotating it on the seal journal of the crankshaft until approximately 3/8 inch protrudes below the parting surface.

Be sure no rubber has been shaved from the outside diameter of the seal by the bottom edge of the groove.

4. Tighten the remaining bearing cap bolts and torque to specifications.

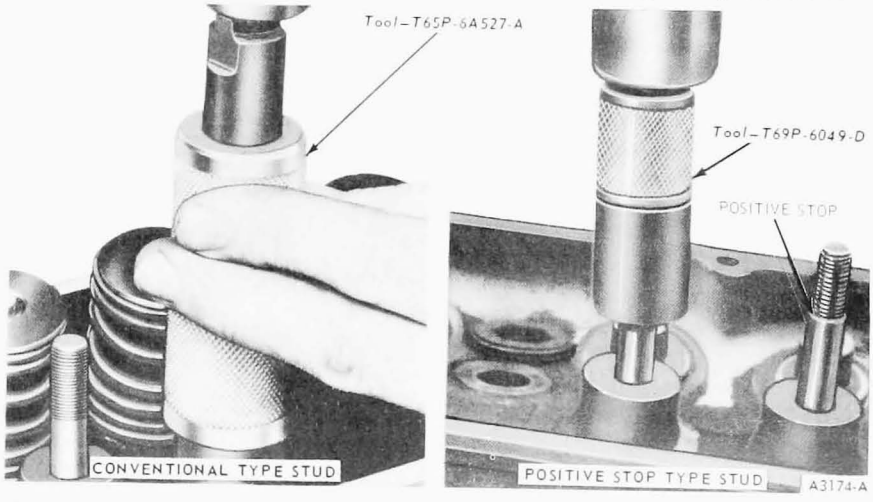

FIG. 17 Installing Rocker Arm Stud—240 Six and 302-W V-8

5. Install the lower seal in the rear main bearing cap with undercut side of seal toward the FRONT of the engine (Fig. 22), allow the seal to protrude approximately 3/8 inch above the parting surface to mate with the upper seal when the cap is installed.
6. Apply a thin coating of oil-resistant sealer to the rear main bearing cap at the rear of the top mating surface. **Do not apply sealer to the area forward of the side seal groove. Install the rear main bearing cap. Torque the cap bolts to specifications.**
7. Install the oil pump and oil pan. Fill the crankcase with the proper amount of viscosity oil.
8. Operate the engine and check for oil leaks.

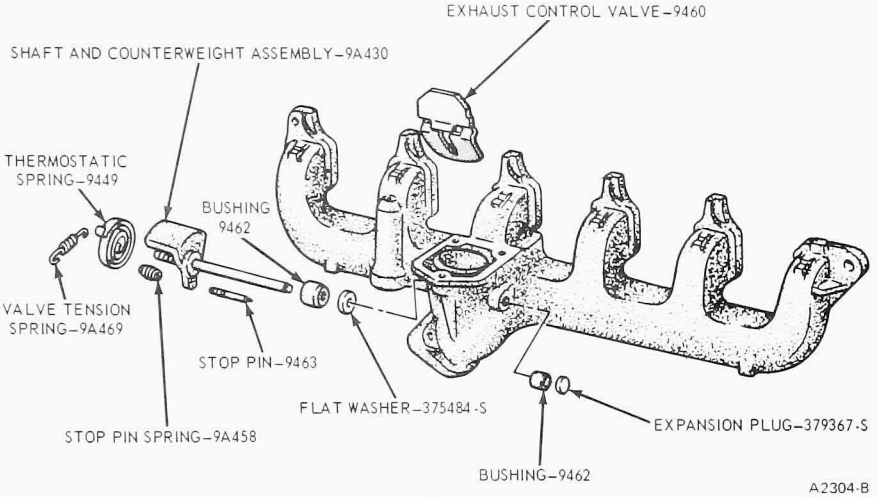

FIG. 18 Exhaust Control Valve Assembly

Part Number	Bushing	Outside Diameter of Bushing	Inside Diameter of Bushing Bore in Manifold
(Front–Std.)	C5AZ-9462-A	0.3070-0.3065	0.3061-0.3051
(Rear–Std.)	C5AZ-9462-B	0.6255-0.6250	0.6246-0.6236
(Front–0.010 O.S.)	C5AZ-9462-C	0.3170-0.3165	0.3161-0.3151
(Rear–0.010 O.S.)	C5AZ-9462-D	0.6355-0.6350	0.6346-0.6336
Note: Dimensions are in inches			

CA1026-B

FIG. 19 Exhaust Control Valve Bushing Sizes—240 and 300 LD Six-Cylinder Engines

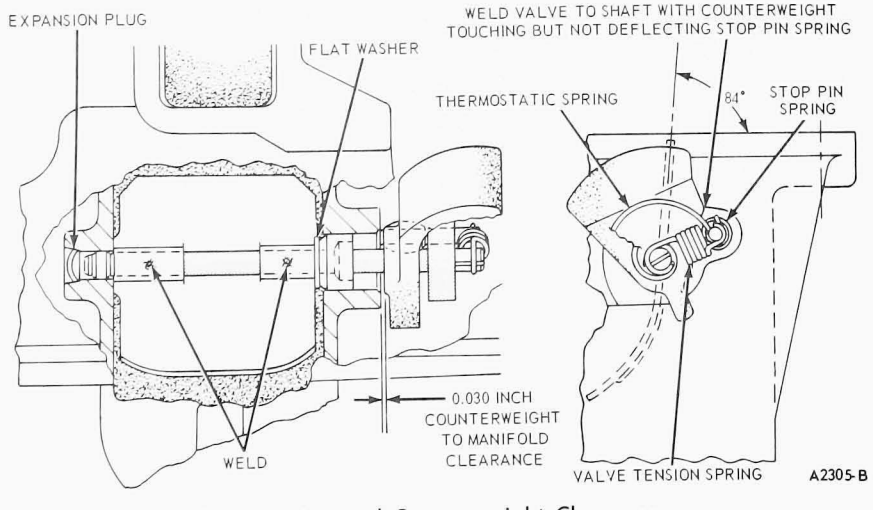

FIG. 20 Valve Plate Position and Counterweight Clearance

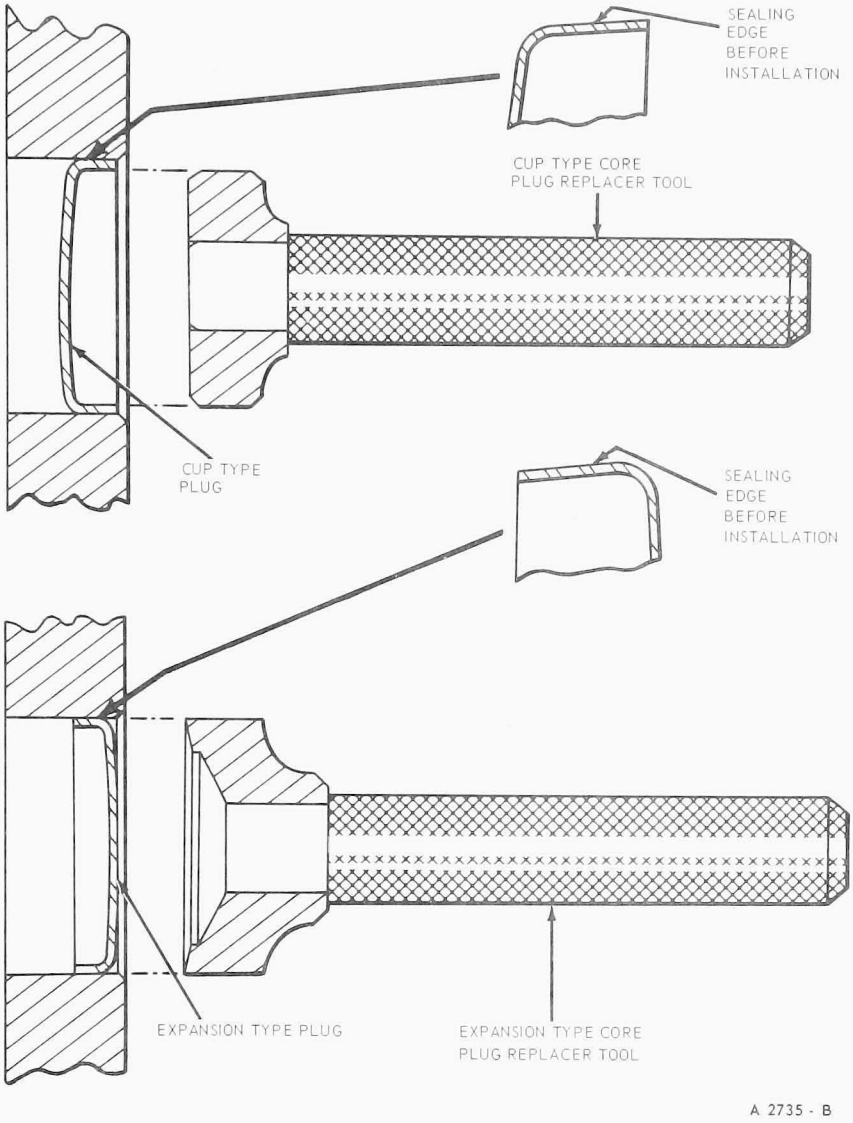

FIG. 21 Typical Core Plugs and Installation Tools

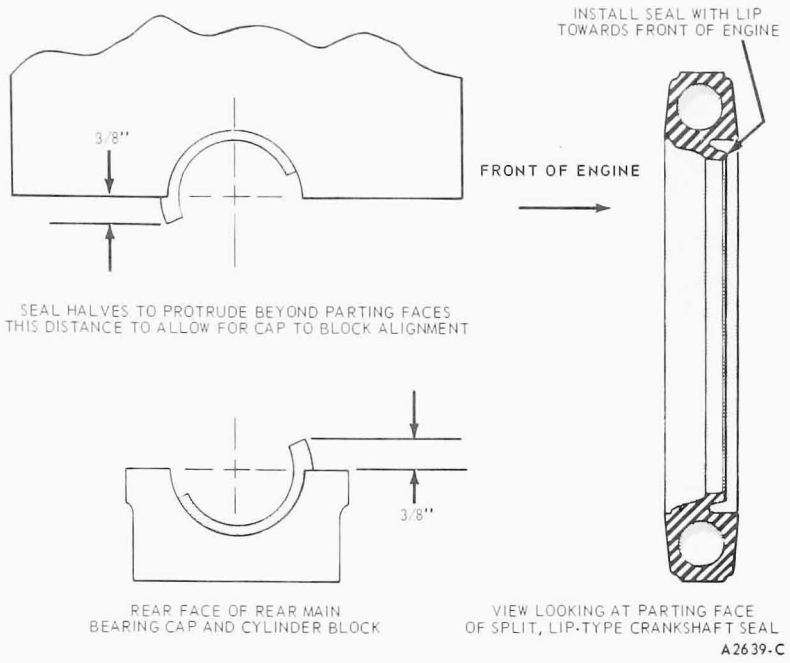

FIG. 22 Installing Crankshaft Rear Oil Seal

OVERHUAL

CYLINDER HEAD

Replace the head if it is cracked. **Do not plane or grind more than 0.010 inch from the cylinder head gasket surface.** Remove all burrs or scratches with an oil stone.

REAMING VALVE GUIDES

If it becomes necessary to ream a valve guide (Fig. 23) to install a valve with an oversize stem, a reaming kit is available which contains the following reamer and pilot combinations: a 0.003 inch OS reamer with a standard diameter pilot, a 0.015 inch OS reamer with a 0.003 inch OS pilot, and a 0.030 inch reamer with a 0.015 inch OS pilot.

When going from a standard size valve to an oversize valve always use the reamer in sequence. **Always reface the valve seat after the valve guide has been reamed, and use a suitable scraper to break the sharp corner (ID) at the top of the valve guide.**

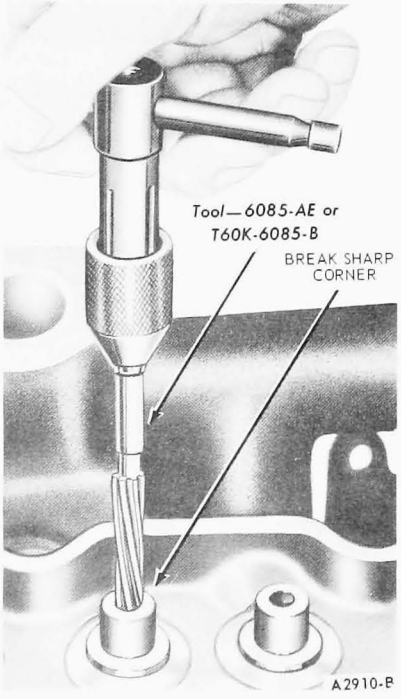

FIG. 23 Reaming Valve Guides

REFACING VALVE SEATS

Refacing of the valve seat should be closely coordinated with the refacing of the valve face so that the finished seat and valve face will be concentric and the specified interference fit will be maintained. This is important so that the valve and seat will have a compression tight fit. Be sure that the refacer grinding wheels are properly dressed.

Grind the valve seats of all engines to a true 45 degree angle (Fig. 24). Remove only enough stock to clean up pits and grooves or to correct the valve seat runout. After the seat has been refaced, use a seat width scale or a machinist scale to measure the seat width (Fig. 25). Narrow the seat, if necessary to bring it within specifications.

If the valve seat width exceeds the maximum limit, remove enough stock from the top edge and/or bottom edge of the seat to reduce the width to specifications.

On the valve seats of all engines use a 60 degree angle grinding wheel to remove stock from the bottom of the seats (raise the seats) and use a 30 degree angle wheel to remove stock from the top of the seats (lower the seats).

The finished valve seat should contact the approximate center of the valve face. It is good practice to determine where the valve seat contacts the face. To do this, coat the seat with Prussian blue and set the valve in place. Rotate the valve with light pressure. If the blue is transferred to the center of the valve face, the contact is satisfactory. If the blue is transferred to the top edge of the valve face, lower the valve seat. If the blue is transferred to the bottom edge of the valve face, raise the valve seat.

VALVES

Minor pits, grooves, etc., may be removed. Discard valves that are severely damaged, or if the face runout cannot be corrected by refinishing or if stem clearance exceeds specifications.

Discard any worn or damaged valve train parts.

Refacing Valves

The valve refacing operation should be closely coordinated with the valve seat refacing operations so that the finished angles of the valve face and of the valve seat will be to specifications and provide a compression-tight fit. Be sure that the refacer grinding wheels are properly dressed.

If the valve face runout is excessive and/or to remove pits and grooves, reface the valves to a true 44 degree angle. Remove only enough stock to correct the runout or to clean up the pits and grooves. If the edge of the valve head is less than 1/32 inch thick after grinding (Fig. 26), replace the valve as the valve will run too hot in the engine. **The interference fit of the valve and seat should not be lapped out.**

Remove all grooves or score marks from the end of the valve stem, and chamfer it as necessary. Do not remove more than 0.010 inch from the end of the valve stem.

If the valve and/or valve seat has been refaced, it will be necessary to check the clearance between the rocker arm pad and the valve stem with the valve train assembly installed in the engine.

Select Fitting Valves

If the valve stem to valve guide clearance exceeds the wear limit, ream the valve guide for the next oversize valve stem. Valves with oversize stem diameters of 0.003, 0.015 and 0.030 inch are available for service. **Always reface the valve seat after the valve guide has been reamed. Refer to Reaming Valve Guides.**

CAMSHAFT REPAIR

Remove light scuffs, scores or nicks from the camshaft machined surfaces with a smooth oil stone.

CRANKSHAFT

Dress minor scores with an oil stone. If the journals are severely marred or exceed the wear limit, they should be refinished to size for the next undersize bearing.

Refinishing Journals

Refinish the journals to give the proper clearance with the next undersize bearing. If the journal will not clean up to maximum undersize bearing available, replace the crankshaft.

Always reproduce the same journal shoulder radius that existed originally. Too small a radius will result in fatigue failure of the crankshaft. Too large a radius will result in bearing failure due to radius ride of the bearing.

After refinishing the journals, chamfer the oil holes; then polish the journal with a No. 320 grit polishing cloth and engine oil. Crocus cloth may also be used as a polishing agent.

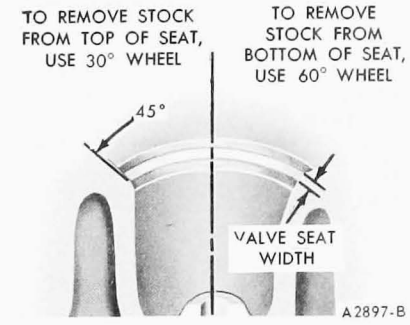

FIG. 24 Refacing Valve Seat

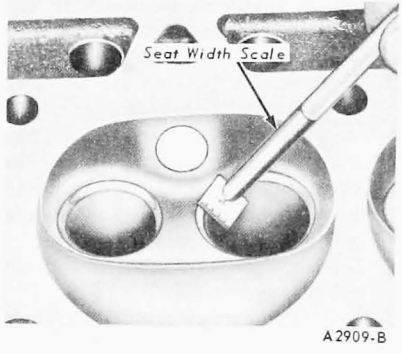

FIG. 25 Checking Valve Seat Width

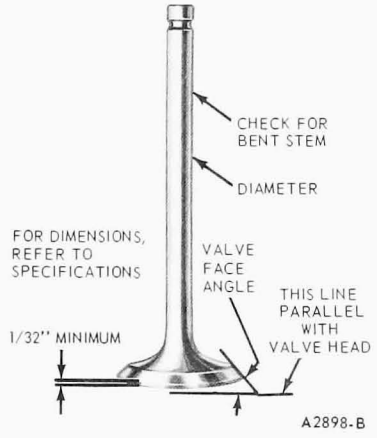

FIG. 26 Critical Valve Dimensions

FITTING MAIN OR CONNECTING ROD BEARINGS WITH PLASTIGAGE

1. Clean crankshaft journals. Inspect journals and thrust faces (thrust bearing) for nicks, burrs or bearing pick-up that would cause premature bearing wear. When replacing standard bearings with new bearings, it is good practice to fit the bearing to minimum specified clearance. If the desired clearance cannot be obtained with a standard bearing, try one half of a 0.001 or 0.002 inch undersize in combination with a standard bearing to obtain the proper clearance.
2. If fitting a main bearing, position a jack under counterweight adjoining bearing which is being checked. **Do not place jack under front post of crankshaft.** Support crankshaft with jack so its weight will not compress Plastigage and provide an erroneous reading.
3. Place a piece of Plastigage on bearing surface across full width of bearing cap and about 1/4 inch off center (Fig. 27).
4. Install cap and torque bolts to specifications. Do not turn crankshaft while Plastigage is in place.
5. Remove cap. Using Plastigage scale, check width of Plastigage at widest point to get minimum clearance. Check at narrowest point to get maximum clearance. Difference between readings is taper of journals.
6. If clearance exceeds specified limits, try 0.001 or 0.002 inch undersize bearings in combination with the

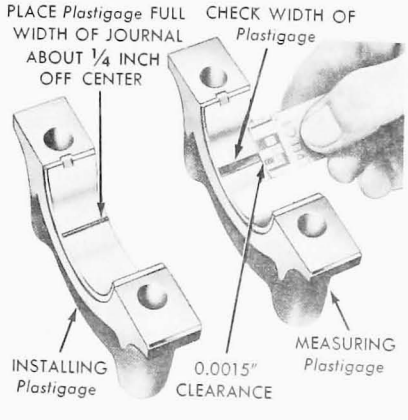

FIG. 27 Installing and Measuring Plastigage—Engine Installed

standard bearings. Bearing clearance must be within specified limits. If 0.002 undersize main bearings are used on more than one journal, be sure they are all installed in cylinder block side of bearing. If standard and 0.002 inch undersize bearings do not bring clearance within desired limits, refinish crankshaft journal, then install undersize bearings.

7. After bearing has been fitted, apply light coat of engine oil to journal and bearings. Install bearing cap. Torque cap bolts to specifications.
8. Repeat procedures for remaining bearings that require replacement.

PISTONS, PINS AND RINGS

Fitting Pistons

Pistons are available for service in standard sizes and the oversizes shown in Fig. 28.

The standard size pistons are color coded red or blue, or have 0.003 O.S. stamped on the dome. Refer to the Specifications for standard size piston dimensions.

Measure the cylinder bore and select the piston to assure the proper clearance. When the bore diameter is in the lower one third of the specified range, a red piston should be used. When the bore diameter is in the middle one third a blue piston should be used. When the bore diameter is in the upper one third, the 0.003 O.S. piston should be used.

Measure the piston diameter to ensure that the specified clearance is obtained. It may be necessary periodically to use another piston (within the same grade size) that is either slightly larger, or smaller to achieve the specified clearance.

If none can be fitted, refinish the cylinder to provide the proper clearance for the piston.

When a piston has been fitted, mark it for assembly in the cylinder to which it was fitted.

If the taper, out-of-round and piston to cylinder bore clearance conditions of the cylinder bore are within specified limits, new piston rings will give satisfactory service. If new rings are to be installed in a used cylinder that has not been refinished, remove the cylinder wall glaze (Refer to Cylinder Block, Refinishing Cylinder Walls). Be sure to clean the cylinder bore thoroughly.

1. Calculate the size piston to be used by taking a cylinder bore check. Follow the procedures outlined under Cleaning and Inspection.
2. Select the proper size piston to provide the desired clearance (refer to the specifications). Measure the piston diameter in line with the centerline of the piston pin and at 90 degrees to the piston pin axis.
3. Make sure the piston and cylinder block are at room temperature (70 degrees F). **After any refinishing operation allow the cylinder bore to cool, and make sure the piston and bore are clean and dry before the piston fit is checked.**
1. Select the proper ring set for the size cylinder bore.
2. Position the ring in the cylinder bore in which it is going to be used.
3. Push the ring down into the bore area where normal ring wear is not encountered.
4. Use the head of a piston to position the ring in the bore so that the ring is square with the cylinder wall. **Use caution to avoid damage to the ring or cylinder bore.**
5. Measure the gap between the ends of the ring with a feeler gauge (Fig. 29). If the ring gap is less or greater than the specified limits, try another ring set.
6. Check the ring side clearance of the compression rings with a feeler gauge inserted between the ring and its lower land (Fig. 30). The gauge should slide freely around the entire ring circumference without binding. Any wear that occurs will form a step at the inner portion of the lower land. **If the lower lands have high steps, the piston should be replaced.**

Engine	Piston Oversize (Inch)
Six 200, 240 and 300	0.020, 0.030 and 0.040
V-8 302, 330, 360, 361, 390, 391, 401, 477 and 534	0.020, 0.030 and 0.040

CA1341-A

FIG. 28 Oversize Service Pistons

FITTING PISTON PINS—330, 360, 361, 390 AND 391 HD V-8

The piston pin should be a light thumb press fit at normal temperature (70 degrees F). Standard piston pins are color coded green. Pins of 0.001 inch oversize (color coded blue) and 0.002 inch oversize (color coded yellow) are available.

Install the piston pin in the piston and rod. Install a new retainer at each end of the pin to hold it in place. Make sure the retainers are properly seated in their grooves.

If the pin hole in the piston must be reamed or honed, use precision honing equipment or an expansion-type, piloted reamer. **Piston pin bores must not be reamed with hand-driven reamers. Use motor-driven reamers, but do not exceed the cutting speed (rpm) recommended by the reamer manufacturer.**

If a reamer is used, set the reamer to the size of the pin bore; then expand the reamer slightly and trail ream the pin bore. Take a light cut. Use a pilot sleeve of the nearest size to maintain alignment of the bores.

Check the hole size, using the new piston pin. If the bore is small, expand the reamer slightly and make another cut. Repeat the procedure until the proper fit is obtained. Check the piston pin for fit in the respective rod or rod bushing. If necessary, ream or hone the rod bushing to fit the pin to specifications.

FITTING PISTON PINS—ALL EXCEPT 330, 360, 361, 390 AND 391 HD V-8

On all engines except those above, install the piston pin, following the procedure under Piston Assembly in the applicable engine Part.

VALVE ROCKER ARM AND/OR SHAFT ASSEMBLY

Dress up minor surface defects on the rocker arm shaft and in the rocker arm bore with a hone (200, Six and 330, 360, 361, 390 and 391 V-8 only).

If the pad at the valve end of the rocker arm has a grooved radius, replace the rocker arm. **Do not attempt to true this surface by grinding.**

Refer to Removal and Installation for the rocker arm stud replacement procedure.

PUSH RODS

Following the procedures under Push Rod Inspection, check the push rods for straightness.

If the runout exceeds the maximum limit at any point, discard the rod. **Do not attempt to straighten push rods.**

CYLINDER BLOCK

Refinishing Cylinder Walls

Honing is recommended for refinishing cylinder walls only when the walls have minor scuffs or scratches, or for fitting pistons to the specified clearance. The grade of hone to be used is determined by the amount of metal to be removed. Follow the instructions of the hone manufacturer. If coarse stones are used to start the honing operation, leave enough material so that all hone marks can be removed with the finishing hone which is used to obtain the proper piston clearance.

Cylinder walls that are severely marred and/or worn beyond the specified limits should be refinished. **Before any cylinder is refinished, all main bearing caps must be in place and tightened to the proper torque so that the crankshaft bearing bores will not become distorted from the refinishing operation.**

Refinish only the cylinder or cylinders that require it. All pistons are the same weight, both standard and oversize; therefore, various sizes of pistons can be used without upsetting engine balance.

Refinish the cylinder with the most wear first to determine the maximum oversize. If the cylinder will not clean up when refinished for the maximum oversize piston recommended, replace the block.

Refinish the cylinder to within approximately 0.0015 inch of the required oversized diameter. This will allow enough stock for the final step of honing so that the correct surface finish and pattern are obtained.

For the proper use of the refinishing equipment, follow the instructions of the manufacturer. Only experienced personnel should be allowed to perform this work.

Use a motor-driven, spring pressure-type hone at a speed of 300-500 rpm. Hones of grit sizes 180-220 will normally provide the desired bore surface finish. When honing the cylinder bores, use a lubricant mixture of equal parts of kerosene and SAE No. 20 MOTOR OIL. Operate the hone in such a way as to produce a cross-hatch finish on the cylinder bore. The cross-hatch pattern should be at an angle of approximately 30 degrees to the cylinder bore. After the final operation in either of the two refinishing methods described and prior to checking the piston fit, thoroughly clean and oil the cylinder walls. Mark the pistons to correspond to the cylinders in which they are to be installed. When the refinishing of all cylinders that require it has been completed and all pistons are fitted, thoroughly clean the entire block and oil the cylinder walls.

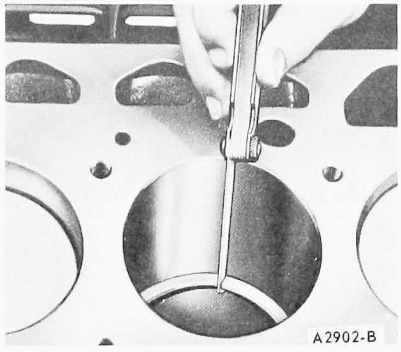

FIG. 29 Checking Piston Ring Gap

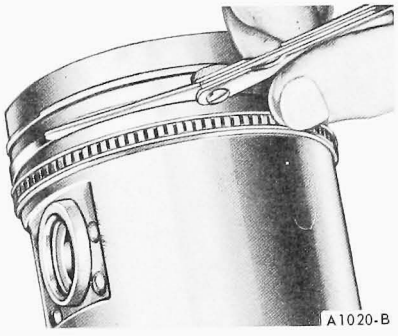

FIG. 30 Checking Piston Ring Side Clearance

Repairing Engine Castings Having Sand Holes or Being Porous

Porosity or sand hole(s) which will cause oil seepage or leakage can occur with modern casting processes. A complete inspection of engine and transmission should be made. If the leak is attributed to the porous condition of the cylinder block or sand hole(s), repairs can be made with metallic plastic (Part No. C6AZ-19554-A). **Do not repair cracks with this material. Repairs with this metallic plastic must be confined to those case iron engine component surfaces (Fig. 31) where the inner wall surface is not exposed to engine coolant pressure or oil pressure, for example:**

1. Cylinder block surfaces extending along the length of the block, upward from the oil pan rail to the cylinder water jacket but not including machined areas.
2. Lower rear face of the cylinder block.
3. Intake manifold casting. Repairs are not recommended to the intake manifold exhaust crossover section since temperature can exceed the recommended temperature limit of 500 degrees F.
4. Cylinder front cover on engines using cast iron material.
5. Cylinder head, along the rocker arm cover gasket surface.

The following procedures should be used to repair porous areas or sand holes in cast iron:

1. Clean the surface to be repaired by grinding or rotary filling to a clean bright metal surface. Chamfer or undercut the hole or porosity to a greater depth than the rest of the cleaned surface. Solid metal must surround the hole. Openings larger than 1/4 inch should not be repaired using metallic plastic. Openings in excess of 1/4 inch can be drilled, tapped and plugged using common tools. Clean the repair area thoroughly. Metallic plastic will not stick to a dirty or oil surface.
2. Mix the metallic plastic base and hardener as directed on the container. Stir thoroughly until uniform.
3. Apply the repair mixture with a suitable clean tool (putty knife, wood spoon, etc.) forcing the epoxy into the hole or porosity.
4. Allow the repair mixture to harden. This can be accomplished by two methods; heat cure with a 250 degree watt lamp placed 10 inches from the repaired surface, or air dry for 10-12 hours at temperatures above 50 degrees F.
5. Sand or grind the repaired area to blend with the general contour of the surrounding surface.
6. Paint the surface to match the rest of the block.

CLEANING AND INSPECTION

The cleaning and inspection procedures are for a complete engine overhaul; therefore, for partial engine overhaul or parts replacement, follow the pertinent cleaning or inspection procedure.

INTAKE MANIFOLD

Cleaning

Remove all gasket material from the machined surfaces of the manifold. Clean the manifold in a suitable solvent and dry it with compressed air.

Inspection

Inspect the manifold for cracks, nicked gasket surfaces, or other damage that would make it unfit for further service. Replace all studs that are stripped or otherwise damaged. **Remove all filings and foreign matter that may have entered the manifold as a result of repairs.**

On a 330, 360, 361 and 391 V-8 check the baffle plate on the underside of the manifold; it should be securely fastened at all retaining points.

EXHAUST MANIFOLDS

Cleaning

Remove all gasket material from the manifold(s).

Inspection

On the 240 six and 300 LD six engines, check the exhaust control valve for freedom from binding throughout the valve travel. If necessary, free the shaft with exhaust control valve solvent. If the solvent does not eliminate the binding condition, replace the component parts (Refer to Exhaust Control Valve Replacement—240 and 300 LD Six).

Inspect the manifold(s) for cracks, damaged gasket surfaces, or other defects that would make them unfit for further service. Inspect the cylinder head joining flanges of the exhaust manifold(s) for evidence of exhaust gas leaks.

VALVE ROCKER ARM AND/OR SHAFT ASSEMBLY

Cleaning

Clean all the parts thoroughly. Make sure that all oil passages are open.

On ball stud rocker arms, make sure the oil passage in the push rod end of the rocker arm is open.

If necessary, remove the plugs from both ends of the rocker arm shaft to thoroughly clean the shaft passages.

Inspection

On rocker arm shaft assemblies, check the clearance between each rocker arm and the shaft by checking the ID of the rocker arm bore and the OD of the shaft. If the clearance between any rocker arm and the shaft exceeds specified limits, replace the shaft and/or the rocker arm. Inspect the shaft and the rocker arm bore for nicks, scratches, scores, or scuffs.

Inspect the pad at the valve end of the rocker arms for indications of scuffing or abnormal wear. If the pad is grooved, replace the rocker arm. **Do not attempt to true this surface by grinding.**

Check the rocker arm adjusting screws and the push rod end of the rocker arms for stripped or broken threads, and the ball end of the adjusting screw for nicks, scratches, or excessive wear.

On the ball stud rocker arms, check the rocker arm and fulcrum seat for excessive wear, cracks, nicks or burrs. Check the rocker arm stud and nut for stripped or broken threads.

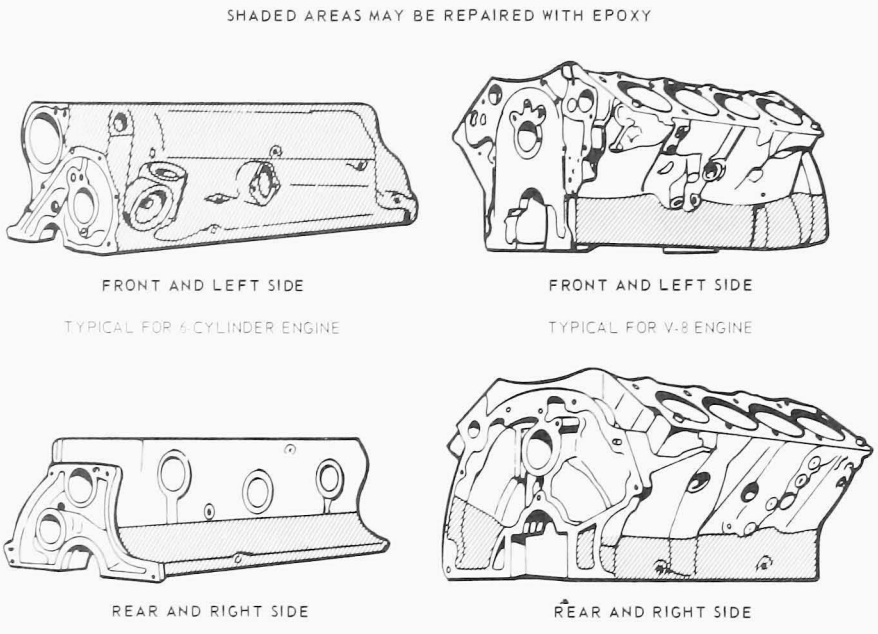

FIG. 31 Typical Cast Iron Cylinder Block Areas Repairable with Metallic Plastic

VALVE ROCKER ARM COVERS

Check the gasket surfaces for damage caused by over-torqued bolts. Straighten the surface as required to restore original flatness.

PUSH RODS

Cleaning

On a 240 or 300 Six or 302 V-8 engines, clean the push rods in a suitable solvent. Blow out the oil passage in the push rod with compressed air.

Inspection

Check the ends of the push rods for nicks, grooves, roughness or excessive wear.

The push rods can be visually checked for straightness while they are installed in the engine by rotating them with the valve closed. They also can be checked with a dial indicator (Fig. 32).

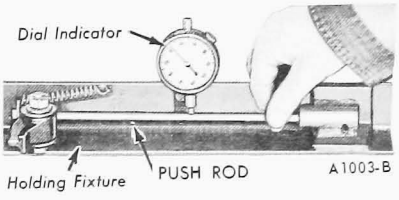

FIG. 32 Checking Push Rod Runout

CYLINDER HEADS

Cleaning

With the valves installed to protect the valve seats, remove deposits from the combustion chambers and valve heads with a scraper and a wire brush. **Be careful not to damage the cylinder head gasket surface.** After the valves are removed, clean the valve guide bores with a valve guide cleaning tool. Using cleaning solvent to remove dirt, grease and other deposits, clean all bolt holes; be sure the oil transfer passage is clean (V-8 engines).

Remove all deposits from the valves with a fine wire brush or buffing wheel.

Inspection

Inspect the cylinder heads for cracks or excessively burned areas in the exhaust outlet ports.



FIG. 33 Checking Cylinder Head Flatness

Check the cylinder head for cracks and inspect the gasket surface for burrs and nicks. Replace the head if it is cracked.

On a 300, 361 and 391 HD V-8 and 401, 477 or 534 SD V-8 engine, check the valve seat inserts for excessive wear, cracks or looseness.

The following inspection procedures are for a cylinder head that is to be completely overhauled. For individual repair operations, use only the pertinent inspection procedure.

Cylinder Head Flatness

When a cylinder head is removed because of gasket leaks, check the flatness of the cylinder head gasket surface (Fig. 33) for conformance to specifications. If necessary to refinish the cylinder head gasket surface, **do not plane or grind off more than 0.010 inch from the original gasket surface.**

Valve Seat Runout

Check the valve seat runout with an accurate gauge (Fig. 34). Follow the instructions of the gauge manufacturer. If the runout exceeds the wear limit, reface the valve and valve seat.

Valve Seat Width

Measure the valve seat width (Fig. 25). Reface the valve seat(s) if the width is not within specifications.

Valves

The critical inspection points and tolerances of the valve are illustrated in Fig. 26. Refer to specifications for wear limits.

Inspect the valve face and the edge of the valve head for pits, grooves or scores. Inspect the stem for a bent condition and the end of the stem for grooves or scores. Check the valve head for signs of burning or erosion, warpage and cracking. Minor pits, grooves, etc., may be removed. Discard severely damaged valves.

Do not discard sodium-cooled valves (330, 361 and 391 HD V-8 or 401, 477 or 534 SD V-8 exhaust valves) with other scrap metal in scrap bins. If a sodium-cooled valve is accidentally broken and the sodium exposed, it will react violently upon contact with water resulting in fire and explosion due to chemical action. Therefore, these valves should be handled with care and disposed of by being buried in the ground in an area not subjected to excavation.

Inspect the valve springs, valve spring retainers, locks and sleeves and discard any visually damaged parts.

Valve Face Runout

Check the valve face runout. It should not exceed the specified wear limit. If the runout exceeds the wear limit, the valve should be replaced or refaced as outlined under Refacing Valves in this section.

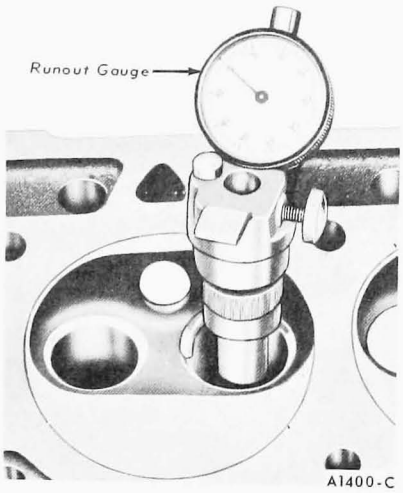

FIG. 34 Checking Valve Seat Runout

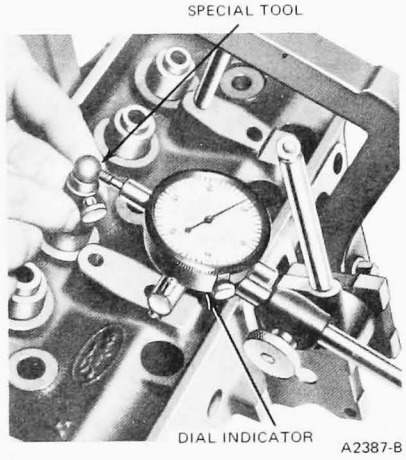

FIG. 35 Checking Valve Stem Clearance

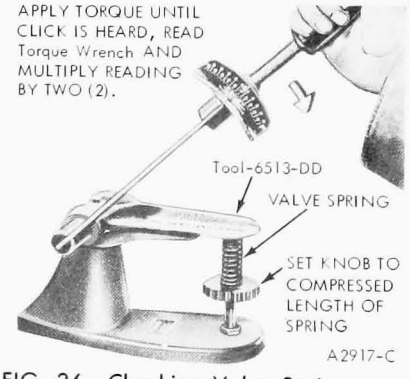

FIG. 36 Checking Valve Spring Pressure

Valve Stem Clearance

Check the valve stem to valve guide clearance of each valve in its respective valve guide with the tool shown in Fig. 35 or its equivalent. Use a flat end indicator point.

Install the tool on the valve stem until it is fully seated, and tighten the knurled set screw firmly. Permit the valve to drop away from its seat until the tool contacts the upper surface of the valve guide.

Position the dial indicator with its flat tip against the center portion of the tool's spherical section at approximately 90 degrees to the valve stem axis. Move the tool back and forth in line with the indicator stem. Take a reading on the dial indicator without removing the tool from the valve guide upper surface. Divide the reading by two, the division factor for the tool.

Valve Spring Pressure

Check the valve spring for proper pressure (Fig. 36) at the specified spring lengths. Weak valve springs cause poor performance; therefore, if the pressure of any spring is lower than the wear limit, replace the spring.

Valve Spring Squareness

Check each spring for squareness using a steel square and a surface plate (Fig. 37). Stand the spring and square on end on the surface plate. Slide the spring up to the square. Rotate the spring slowly and observe the space between the top coil of the spring and square. If the spring is out of square more than 5/64 inch, replace it.

Follow the same procedure to check new valve springs before installation.

Make certain the proper spring (color coded) is installed.

HYDRAULIC VALVE LIFTERS

The valve lifter assemblies should be kept in proper sequence so that they can be installed in their original position. Inspect and test each lifter separately so as not to intermix the internal parts. **If any part of the lifter assembly needs replacing, replace the entire assembly.**

Cleaning

Thoroughly clean all the parts in clean solvent and wipe them with a clean, lint-free cloth.

Inspection

Inspect the parts and discard the entire lifter assembly if any part shows pitting, scoring, galling or evidence of non-rotation. Replace the entire assembly if the plunger is not free in the body. The plunger should drop to the bottom of the body by its own weight when assembled dry.

Assemble the lifter assembly and check for freeness of operation by pressing down on the push rod cup. The lifters can also be checked with a hydraulic tester to test the leak-down rate. Follow the instructions of the test

unit manufacturer or the procedure in this Part.

MECHANICAL TAPPETS

Cleaning

Thoroughly clean the tappets in clean solvent and wipe them with a clean, lint-free cloth.

Inspection

Inspect the tappets, and discard any that show signs of pitting, scoring or galling. Replace any tappets that show evidence of non-rotation.

CRANKSHAFT VIBRATION DAMPER AND SLEEVE

Cleaning

Clean the oil seal contact surface on the crankshaft damper or sleeve with solvent to remove any corrosion, sludge or varnish deposits. Excess deposits that are not readily removed with solvent may be removed with crocus cloth. Use crocus cloth to remove any sharp edges, burrs or other imperfections which might damage the oil seal during installation or cause premature seal wear. **Do not use crocus cloth to the extent that the seal surface becomes polished. A finely polished surface may produce poor sealing or cause premature seal wear.**

Inspection

Inspect the crankshaft damper or sleeve oil seal surface for nicks, sharp edges or burrs that might damage the oil seal during installation or cause premature seal wear.

TIMING CHAIN AND SPROCKETS

Cleaning

Clean all parts in solvent and dry them with compressed air.

Lubricate the timing chain with engine oil before installing it on the engine.

Inspection

Inspect the chain for broken links. Inspect the sprockets for cracks and worn or damaged teeth. Replace all the components of the timing chain and sprocket assembly, if any one item needs replacement.

Inspect the fuel pump drive eccentric for scores, nicks and excessive wear. If the eccentric is scored, replace it.

TIMING GEARS

Cleaning

Clean the gears in solvent and dry them with compressed air.

Inspection

Inspect the gear teeth for scores, nicks, etc. Note the condition of the teeth contact pattern. If the teeth are scored, replace the gears.

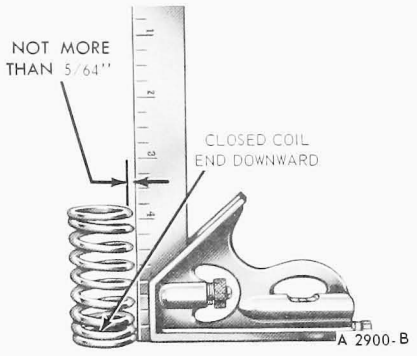

FIG. 37 Checking Valve Spring Squarenes

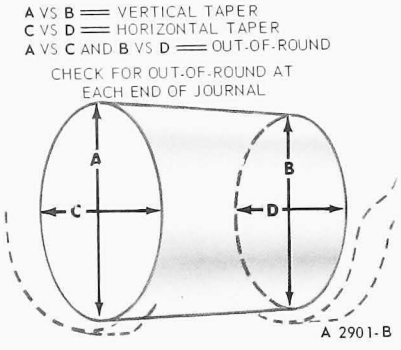

FIG. 38 Crankshaft Journal Measurement

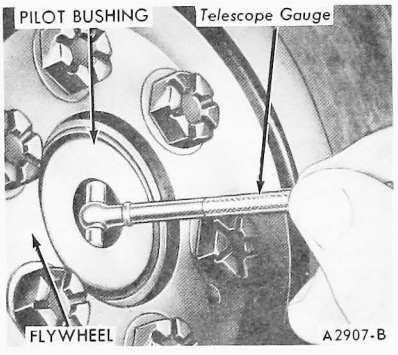

FIG. 39 Measuring Clutch Pilot Bushing Wear

It is not necessary to replace the gears in sets. Replace the camshaft gear and check the backlash, runout, etc., to determine if the crankshaft gear should be replaced.

CAMSHAFT

Cleaning and Inspection

Clean the camshaft in solvent and wipe it dry. Inspect the camshaft lobes for scoring and signs of abnormal wear. Lobe wear characteristics may result in pitting in the general area of the lobe toe. This pitting is not detrimental to the operation of the camshaft; therefore, the camshaft should not be replaced unless the camshaft lobe lift loss has exceeded 0.005 inch.

The lift of camshaft lobes can be checked with the camshaft installed in the engine or on centers. Refer to Camshaft Lobe Lift.

Check the distributor drive gear for broken or chipped teeth.

Check the fuel pump eccentric (if so equipped) for excessive wear.

CRANKSHAFT

Cleaning

Handle the crankshaft with care to avoid possible fractures or damage to the finish surfaces. Clean the crankshaft with solvent, and blow out all oil passages with compressed air.

On a 240 or 300 Six clean the oil seal contact surface at the rear of the crankshaft with solvent to remove any corrosion, sludge or varnish deposits. Excess deposits that are not readily removed with solvent may be removed with crocus cloth. Use crocus cloth to remove any sharp edges, burrs or other imperfections which might damage the oil seal during installation or cause premature seal wear. **Do not use crocus cloth to the extent that the seal surfaces become polished. A finely polished surface may produce poor sealing or cause premature seal wear.**

Inspection

Inspect the main and connecting rod journals for cracks, scratches, grooves or scores.

Measure the diameter of each journal at least four places to determine out-of-round, taper or undersize condition (Fig. 38).

On an engine used with a manual shift transmission, check the fit of the clutch pilot bushing in the bore of the crankshaft. The bushing is pressed into the crankshaft and should not be loose. Inspect the inner surface of the bushing for wear or a bell-mouth condition. Check the ID of the bushing (Fig. 39). Replace the bushing if it is damaged or the ID is not within specifications.

Inspect the pilot bearing, when used, for roughness, evidence of overheating or loss of lubricant. Replace if any of these conditions are found.

On the 240 and 300 Six engines, inspect the rear oil seal surface of the crankshaft for excessively deep grooves, nicks, burrs, porosity, or scratches which could damage the oil seal lip during installation. Remove all nicks and burrs and polish the chamfered edge and oil seal contact surface with crocus cloth.

FLYWHEEL-MANUAL-SHIFT TRANSMISSIONS

Inspection

Inspect the flywheel for cracks, heat checks, or other damage that would make it unfit for further service. Machine the friction surface of the flywheel if it is scored or worn. If it is necessary to remove more than 0.045 inch of stock from the original thickness, replace the flywheel.

Inspect the ring gear for worn, chipped, or cracked teeth. If the teeth are damaged, replace the ring gear.

With the flywheel installed on the crankshaft, check the flywheel face runout, following the procedure in this Part.

FLYWHEEL-AUTOMATIC TRANSMISSION

Inspection

Inspect the flywheel for cracks or other damage that would make it unfit for further service. Inspect the starter ring gear for worn, chipped or cracked teeth. If the teeth are damaged, replace the starter ring gear and flywheel assembly.

With the flywheel installed on the crankshaft, check the gear face runout of the flywheel (Refer to Diagnosis and Testing for the proper procedure).

CONNECTING RODS

Cleaning

Remove the bearings from the rod and cap. Identify the bearing if they are to be used again. Clean the connecting rod in solvent, including the rod bore and the back of the inserts. **Do not use a caustic cleaning solution. Blow out all passages with compressed air.**

Inspection

The connecting rods and related parts should be carefully inspected and checked for conformance to specifications. various forms of engine wear caused by these parts can be readily identified.

A shiny surface on the pin boss side of the piston usually indicates that a connecting rod is bent or the piston pin hole is not in proper relation to the piston skirt and ring grooves.

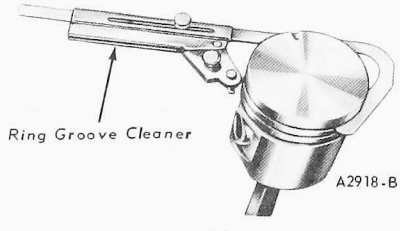

FIG. 40 Cleaning Ring Grooves—Typical

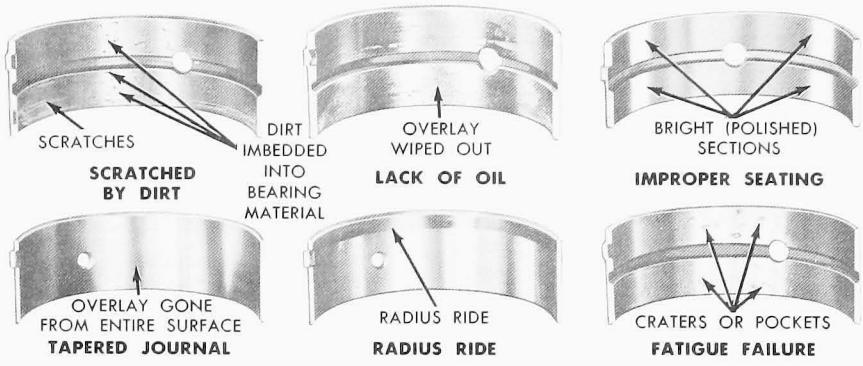

FIG. 41 Typical Bearing Failures

Abnormal connecting rod bearing wear can be caused by either a bent connecting rod, an improperly machined journal, or a tapered connecting rod bore.

Twisted connecting rods will not create an easily identifiable wear pattern, but badly twisted rods will disturb the action of the entire piston, rings, and connecting rod assembly and may be the cause of excessive oil consumption.

Inspect the connecting rods for signs of fractures and the bearing bores for out-of-round and taper. If the bore exceeds the maximum limit and/or if the rod is fractured, it should be replaced.

On connecting rods that have a piston pin bushing, check the piston pin to connecting rod bushing clearance. Replace the connecting rod if the bushing is so worn that it cannot be reamed or honed for an oversize pin.

On the 240 and 300 Six engines, check the ID of the connecting rod piston pin bore. Replace the connecting rod if the pin bore is not within specifications. Replace defective connecting rod nuts and bolts.

After the connecting rods are assembled to the piston, check the rods for bend or twist on a suitable alignment fixture. Follow the instructions of the fixture manufacturer. If the bend and/or twist exceeds specifications, the rod must be straightened or replaced.

PISTONS, PINS AND RINGS

Remove deposits from the piston surfaces. Clean gum or varnish from the piston skirt, piston pins and rings with solvent. **Do not use a caustic cleaning solution or a wire brush to clean pistons.**

Clean the ring groove with a ring groove cleaner (Fig. 40). Make sure the oil ring slots (or holes) are clean.

Inspection

Carefully inspect the pistons for fractures at the ring lands, skirts, and pin bosses, and for scuffed, rough, or scored skirts. If the lower inner portion of the ring grooves have high steps, replace the piston. The step will interfere with ring operation and cause excessive ring side clearance.

Spongy, eroded areas near the edge of the piston top are usually caused by detonation or pre-ignition. A shiny surface on the thrust surface of the piston, offset from the centerline between the piston pin holes, can be caused by a bent connecting rod. Replace pistons that show signs of excessive wear, wavy ring lands or fractures, or damage from detonation or pre-ignition.

Check the piston to cylinder bore clearance by measuring the piston and bore diameters. Refer to the specifications for the proper clearance. Refer to Cylinder Block Inspection for the bore measurement procedure. **Measure the OD of the piston with micrometers at the centerline of the piston bore and at 90 degrees to the pin bore axis. Check the ring side clearance following the procedure under Fitting Piston Rings in this Section.**

Replace piston pins showing signs of fracture, etching or wear. Check the piston pin fit in the piston and rod. Refer to Pistons and Connecting Rods Assembly, in the pertinent engine Section.

Check the OD of the piston pin and the ID of the pin bore in the piston. Replace any piston pin or piston that is not within specifications.

Replace all rings that are scored,

chipped or cracked. Check the end gap and side clearance. It is good practice to always install new rings when overhauling an engine. Rings should not be transferred from one piston to another regardless of mileage.

MAIN AND CONNECTING ROD BEARING

Cleaning

Clean the bearing inserts and caps thoroughly in solvent, and dry them with compressed air. **Do not scrape gum or varnish deposits from bearing shells.**

Inspection

Inspect each bearing carefully. Bearings that have a scored, chipped, or worn surface should be replaced. Typical examples of bearings that should be replaced and the causes are shown in Fig. 41. The copper-lead bearing base may be visible through the bearing overlay. This does not mean that the bearing is worn. **It is not necessary to replace the bearing if the bearing clearance is within recommended limits.** Check the clearance of bearings that appear to be satisfactory with Plastigage. Fit new bearings following the recommended procedure in this Part.

CYLINDER BLOCK

Cleaning

After any cylinder bore repair operation, such as honing or deglazing, clean the bore(s) with soap or detergent and water. **Then, thoroughly rinse the bore(s) with clean water to remove the soap or detergent, and wipe the bore(s) dry with a clean, lint-free cloth. Finally, wipe the bore(s) with a clean cloth dipped in engine oil. If these procedures are not followed, rusting of the cylinder bore(s) may occur.**

If the engine is disassembled, thoroughly clean the block in solvent. Remove old gasket material from all machined surfaces. Remove all pipe plugs that seal oil passages; then clean out all the passages. Blow out all passages, bolt holes, etc., with compressed air.

Make sure the threads in the cylinder head bolt holes are clean. Dirt in the threads may cause binding and result in a false torque reading. Use a tap to true-up threads and to remove any deposits.

Inspection

After the block has been thoroughly cleaned, check it for cracks. Minute cracks not visible to the naked eye may be detected by coating the suspected area with a mixture of 25 percent kerosene and 75 percent light engine oil. Wipe the part dry and immediately apply a coating of zinc oxide dissolved in wood alcohol. If cracks are present, the coating will become discolored at the cracked area. Replace the block if it is cracked.

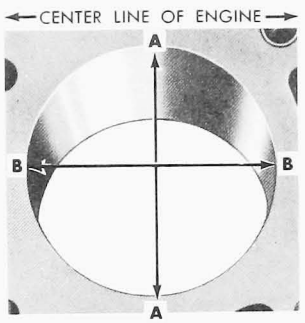

FIG. 42 Cylinder Bore Out-Of-Round and Taper

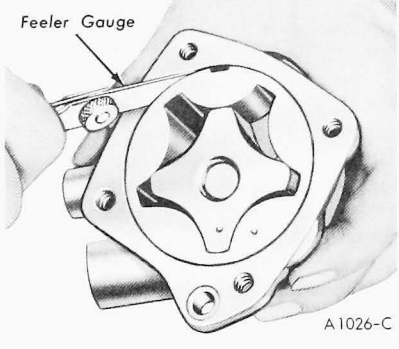

FIG. 43 Checking Outer Race-to-Housing Clearance

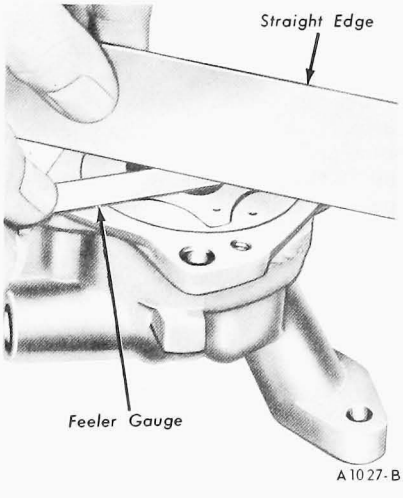

FIG. 44 Checking Rotor End Play

Check all machined gasket surfaces for burrs, nicks, scratches and scores. Remove minor imperfections with an oil stone. Check the cylinder block for flatness of the cylinder head gasket surface following the procedure and specifications recommended for the cylinder head. The cylinder block can be machined to bring the cylinder head gasket surface within the flatness specifications, **but not to exceed 0.010 inch stock removal from the original gasket surface.**

Replace all expansion-type plugs that show evidence of leakage.

Inspect the cylinder walls for scoring, roughness, or other signs of wear. Check the cylinder bore for out-of-round and taper. Measure the bore with an accurate bore gauge following the instructions of the manufacturer. Measure the diameter of each cylinder bore at the top, middle and bottom with the gauge placed at right angles and parallel to the centerline of the engine (Fig. 42). Use only the measurements obtained at 90 degrees to the engine centerline when calculating the piston to cylinder bore clearance.

Refinish cylinders that are deeply scored and/or when out-of-round and/or taper exceed the wear limits.

If the cylinder walls have minor surface damage, but the out-of-round and taper are within limits, it may be possible to remove such damage by honing the cylinder walls and installing new service piston rings providing the piston clearance is within specified limits.

To remove the cylinder wall glaze or to refinish a cylinder bore, follow the honing procedure described under Cylinder Block-Refinishing Cylinder Walls.

OIL PAN

Cleaning

Scrape any dirt or metal particles from the inside of the pan. Scrape all old gasket material from the gasket surface. Wash the pan in a solvent and dry it

thoroughly. Be sure all foreign particles are removed from below the baffle plate.

Inspection

Check the pan for cracks, holes, damaged drain plug threads, and a loose baffle. Check the gasket surface for damage caused by over-torqued bolts. Straighten the surface as required to restore original flatness.

Replace the pan if repairs cannot be made.

OIL COOLER—401, 477 AND 534 V-8

Cleaning

Clean the oil cooler as soon as possible after removing it from the engine, or soak it in cleaning solvent until ready to clean. This will prevent hardening and drying of accumulated foreign material.

Immerse the oil cooler in a commercial cleaning solvent and clean the outside of the plates with a stiff bristle brush.

Pressure circulate a standard commercial solvent (at a pressure of approximately 20 psi) through the oil passages of the cooler in the reverse direction of normal flow. Normal flow is from the bottom hole (inlet) to the top hole (outlet). If a circulating pump is not available, soak the cooler in solvent for a few minutes and force the solvent through the oil passages with a plunger or piston-type hand pump. If the oil passages are severely clogged, use an Oakite or alkaline solution. After cleaning, pressure flush the cooler with clean hot water.

Thoroughly clean the passages in the cover and clean the relief valve assembly. Remove gasket sealer from the cover, oil cooler, and block.

Inspection

The cooler should be checked for leaks under a pressure equivalent to the maximum engine oil pressure.

OIL PUMP

Cleaning

Wash all parts in a solvent and dry them thoroughly with compressed air. Use a brush to clean the inside of the pump housing and the pressure relief valve chamber. Be sure all dirt and metal particles are removed.

Inspection

Refer to the specifications for clearances and wear limits.

Check the inside of the pump housing and the outer race and rotor for damage or excessive wear or scoring.

Check the mating surface of the pump cover for wear. If the cover mating surface is worn, scored or grooved, replace the cover.

Measure the outer race to housing clearance (Fig. 43).

With the rotor assembly installed in the housing, place a straight edge over the rotor assembly and the housing. measure the clearance (rotor end play) between the straight edge and the rotor and outer race (Fig. 44).

The outer race, shaft and rotor are replaceable only as an assembly.

Check the drive shaft to housing bearing clearance by measuring the OD of the shaft and the ID of the housing bearing.

Inspect the relief valve spring for a collapsed or worn condition. Check the relief valve spring tension. If the spring tension is not within specifications and/or the spring is worn or damaged, replace the spring.

Check the relief valve piston for scores and free operation in the bore.

CRANKCASE VENTILATION SYSTEM

Refer to the 1973 Truck Maintenance and Lubrication Manual for the correct mileage interval for maintenance.

Do not attempt to clean the crankcase ventilation regulator valve; replace it at the recommended maintenance interval.

The oil filler tube breather cap, located on the valve rocker arm cover should be cleaned at the proper mileage interval. Remove the cap and wash it in a low-volatility, petroleum base solvent. Shake the cap dry and install it. Do not dry with compressed air as air pressure may damage the filter element.

Clean the crankcase ventilation system connection(s) on the carburetor spacer or intake manifold by probing the inlet nipple with a flexible wire or bottle brush.

Clean the rubber hoses with a low-volatility, petroleum-base solvent and dry with compressed air.

SPECIAL SERVICE TOOLS

Description	Ford Tool No.	Former No.	APPLICATION IN ENGINE SIZE				
			200,240, 300	302	360, 390	330 MD, 330, 361, 391 H.D.	401, 477, and 534
Engine Lifting Bracket – Use with T53L-300-A	T58P-6000-A	6000-BD			X	X	
Engine Lifting Hook	T60K-6000-A		X				
Engine Lifting Cradle	T65E-6000-B		X				
Engine Support Bar	T65E-6000-J		X				
Engine Lifting Sling	TOOL-6000-BE						X
Adapter Mount – To fit K. R. Wilson 1009 or Manzel 6001-TES	T64L-6001-B or T64L-6001-C	T52T-6005-CJD T52T-6005-KJD TOOL-6001-FBA	X	X	X		
Ridge Reamer	T64L-6011-EA						X
Cylinder Front Cover Pilot	T61K-6019-A	4222-M, 6059-D	X				
	T64T-6019-A					X	
	T61P-6019-B	6059-F	X		X	X ②	
Cylinder Head Holding Fixture	T58P-6085-A	6085-M				X	
Valve Guide Reamer Kit	T58P-6085-B	6085-H			X		
	T60K-6085-B	6085-AE	X				
Piston Pin Remover and Replacer Press	T65L-6135-C	T60K-6135-B	X	X			
Piston Pin Remover	T52P-6135-DAD				X	X	
Piston Ring Compressor	TOOL-6149-E						X
Camshaft Bearing Remover or Replacer	T56-6250-A						X
Camshaft Bearing Remover and Replacer Adapters	T65L-6250-A	T52L-6261-CEE	X	X	X	X	
Camshaft Rear Bearing Bore Plug Installer	T58P-6266-A					X	
Cylinder Head Core Plug, Cylinder Block Core Plug and Camshaft Bearing Bore Plug Replacer	T52L-6266-BGD	6266-B	X				
Camshaft Rear Bearing Bore Plug Installer	T52T-6266-CJD						X
Crankshaft Sprocket and Crankshaft Damper Replacer	T52L-6306-AEE	3355-D 6306-AC					X
Crankshaft Gear Remover	T58T-6306-A						X
Crankshaft Damper Replacer	T64T-6306-A		X	X	X	X	
Crankshaft Damper Replacer – Use with T64T-6306-A	T65L-6306-A		X				
Crankshaft Gear Installer	T52L-6306-AEE			X			X
Crankshaft Damper Remover Adapter Screw Use with T58P-6316-B	T64T-6316-A		X			X	
Crankshaft Damper Remover	T58P-6316-B		X		X	X	
Upper Main Bearing Insert Remover and Replacer	TOOL-6331	6331	X	X			
Upper Main Bearing Insert Remover and Replacer	TOOL-6331-E	6331-E			X		
Crankshaft Pulley Spacer Remover	T56P-6362-A					X	
Hydraulic Tappet Clip Replacer	TOOL-6500-C	6500-C	X		X		
Impact Hammer	T50T-100-A		X	X	X		
Impact Slide Hammer (Replaces OTC-927)	T59L-100-B		X		X		X
Puller Attachment – Use with T50T-100-A or T59L-100-B	T58L-101-A	OTC-927	X	X	X		X
Handle Adapter	T53L-200-A		X	X	X		
Engine Lifting Sling	T53L-300-A	6000-BA	X	X	X	X	
In Chassis – Valve Spring Compressor	K-D915					X	
Gear Puller ①	TOOL-OTC-943		X				
Differential Backlash and Runout Gauge, with Universal Bracket Dial Indicator and Bracket – Includes Indicator TOOL-6565	TOOL-4201-C	4201-C	X	X	X		

① Used on 300 CID engines only ② 300 MD only

CA1278-B

SPECIAL SERVICE TOOLS (Continued)

Description	Ford Tool No.	Former No.	APPLICATION IN ENGINE SIZE				
			200, 240 300	302	360, 390	330 MD, 330, 361, 391 H.D.	401, 477, and 534
Hydraulic Tappet Leakdown Tester	TOOL-6500-E	6500-E	X	X	X		
Hydraulic Tappet Plunger Remover and Replacer	TOOL-6500-F	6500-F	X	X	X		
Solid Tappet Remover	T52T-6500-DJD	6500-D					X
Valve Stem Clearance Checking Tool	T65T-6505-H	6505-E		X			X
Valve Stem Clearance Checking Tool	TOOL-6505-F	6505-F				X	
Valve Stem Clearance Checking Tool	TOOL-6505-G	6505-G	X				
Crankshaft Damper Remover	T64T-6512-A						X
Valve Spring and Rocker Arm Compressor	TOOL-6513-J	6513-J			X		
Valve and Clutch Spring Tester	TOOL-6513-DD	6513-DD	X	X	X		
Air Adapter and Hose-Valve Holdup	TOOL-6513-ABA	6513-AB	X	X	X		
Rocker Arm Stud Kit	T62F-6A527-B	6527-A,B	X	X			
Cam Lift and Push Rod Stroke Dial Indicator – 1 inch range (Part of TOOL-4201-C)	TOOL-6565	6565	X	X	X		
Valve Spring Compressor	T62F-6565-A	6513-HH	X	X			
Cup Shaped Adapter to TOOL-6565	TOOL 6565-AB	6565-AB	X	X	X		
Cylinder Front Cover Oil Seal Installer	T58T-6700-A						X
Cylinder Block Front Cover Oil Seal Replacer Adapter – Use With T53L-200-A	T58P-6700-B	6700-B	X	X	X	X ①	
Cylinder Front Cover Oil Seal Installer	T64T-6700-B					X	
Crankshaft Rear Oil Seal Forming Tool	T58P-6701-A	6701-C			X	X	
Crankshaft Rear Oil Seal Forming Tool	T60K-6701-A	6701-E					
Crankshaft Rear Oil Seal Forming Tool	T65L-6701-A		X				
Clutch Pilot Bearing Replacer	T65L-7600-A		X				
Clutch Pilot Bearing Replacer	TOOL-7600-H	7600-H		X			
Clutch Disc Alignment Pilot	TOOL-7563-E	7563					X

① Used on 330 MD Only

CA1278-B1

PART 21-11 240 and 300 CID Six-Cylinder Engines

COMPONENT INDEX	Page
CAMSHAFT	
Removal and Installation	11-13
CAMSHAFT BEARING	
Removal and Installation	11-21
CAMSHAFT REAR BEARING BORE PLUG	
Removal and Installation	11-16
CLUTCH PILOT BUSHING	
Removal and Installation	11-15
CONNECTING ROD BEARINGS	
Removal and Installation	11-18
CRANKCASE VENTILATION SYSTEM	
Description	11-2
Removal and Installation	11-8
CRANKSHAFT	
Removal and Installation	11-19
CRANKSHAFT REAR OIL SEAL	
Removal and Installation	11-17
CYLINDER ASSEMBLY	
Disassembly and Assembly	11-26
CYLINDER BLOCK	
Disassembly and Assembly	11-27
CYLINDER FRONT COVER AND OIL SEAL	
Removal and Installation	11-12
CYLINDER HEAD	
Disassembly and Assembly	11-24
Removal and Installation	11-10
ENGINE	
Description	11-2
Disassembly and Assembly	11-22
Removal and Installation	11-4
ENGINE FRONT SUPPORTS	
Removal and Installation	11-6
ENGINE REAR SUPPORTS	
Removal and Installation	11-7
EXHAUST EMISSION CONTROL SYSTEM	
Description	11-2
FLYWHEEL	
Removal and Installation	11-15
MAIN BEARING	
Removal and Installation	11-17
MANIFOLDS–INTAKE AND EXHAUST	
Removal and Installation	11-9
OIL FILTER	
Removal and Installation	11-21
OIL PAN	
Removal and Installation	11-16
OIL PUMP	
Disassembly and Assembly	11-26
Removal and Installation	11-17
PISTONS & CONNECTING RODS	
Disassembly and Assembly	11-26
Removal and Installation	11-19
SPECIFICATIONS	11-28
TIMING GEARS	
Removal and Installation	11-14
VALVE CLEARANCE ADJUSTMENT	11-3
VALVE LIFTER	
Disassembly and Assembly	11-25
Removal and Installation	11-12
VALVE ROCKER ARM COVER AND ROCKER ARM	
Removal and Installation	11-9
VALVE SPRING, RETAINER AND STEM SEAL	
Removal and Installation	11-11
WATER PUMP	
Removal and Installation	11-12

DESCRIPTION

ENGINE

The 240 Six, 300 LD Six and 300 HD Six Engines (Fig. 1), have a displacement of 240 or 300 cubic inches. The compression ratios are as follows: 240 Six-8.5:1, 300 LD and HD Six-8.4:1. The rating plate identification symbol for the 240 Six engine is A. The symbol for the 300 LD and HD Six is B.

An engine identification tag is attached to the engine (refer to Part 21-01).

EXHAUST EMISSION CONTROL SYSTEM

The 1973 engines incorporate an IMCO (improved combustion) exhaust emission control system.

The IMCO exhaust emission control system controls engine combustion at a level to reduce contaminants normally emitted through the exhaust system. This is accomplished by using specially calibrated carburetors and distributors. The EGR (Exhaust Gas Recirculation System) is covered in Volume VI of this manual.

CRANKCASE VENTILATION SYSTEM

Ventilating air enters the crankcase through the oil filler (breather) cap at the rear of the valve rocker arm cover (Fig. 2). The oil filler cap is sealed to prevent air entrance, but the top of the filler cap is connected to the engine air cleaner by a hose to admit clean air to the crankcase. If the system becomes restricted, a backflow condition will occur, thereby venting the crankcase gases into the air cleaner and induction air system.

The amount of regulator valve opening or restriction is governed by intake manifold vacuum pressure (Fig. 3).

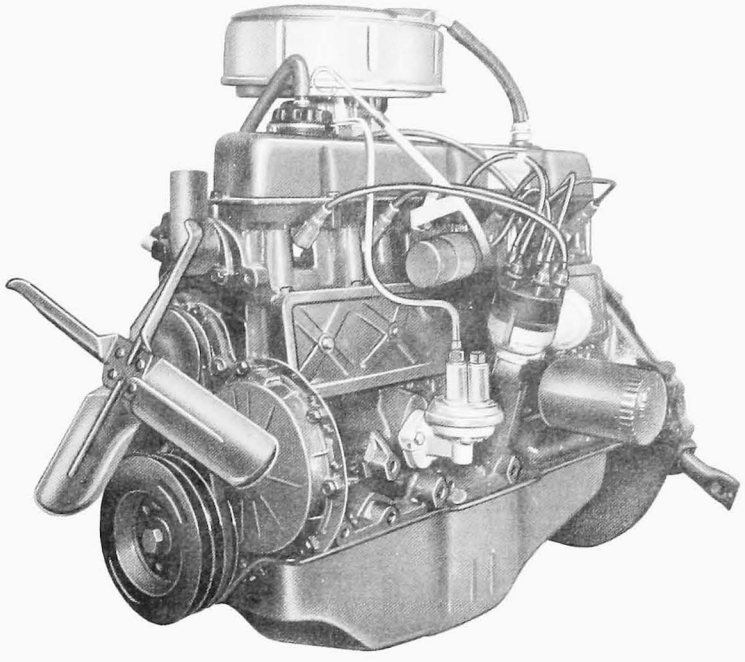

A2774-C

FIG. 1 3/4 Front View of Engine

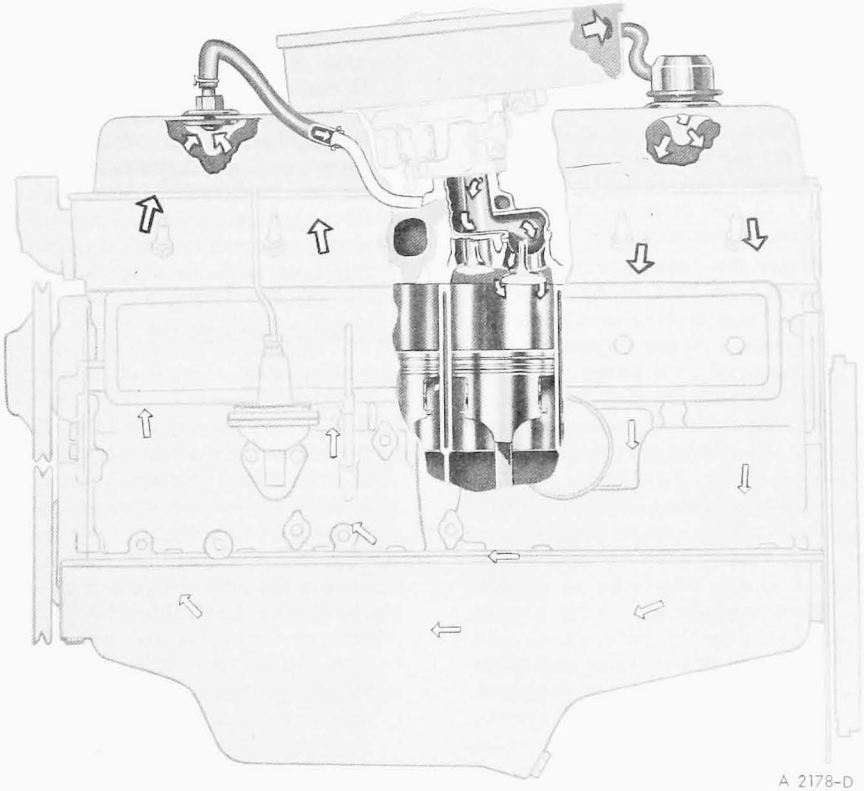

A 2178-D

FIG. 2 Typical Position Closed-Type Crankcase Ventilation System

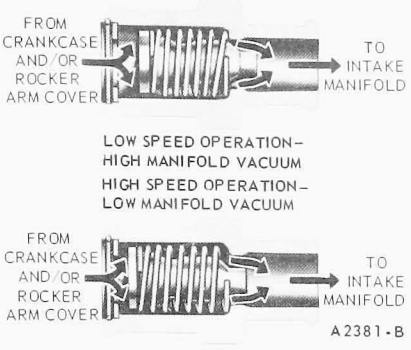

FIG. 3 Positive Closed-Type Crankcase Ventilation Regulator Valve

ADJUSTMENTS

VALVE CLEARANCE

There are two procedures for adjusting the valve clearance on the 240 and 300 Six engines. Both procedures are included in the following paragraphs, but the first procedure is normally used.

PREFERRED PROCEDURE

1. **Install an auxiliary starter switch. Crank the engine with the ignition switch OFF.**
2. Make two chalk marks on the crankshaft damper (Fig. 4). Space the marks approximately 120 degrees apart so that, with the timing mark, the damper is divided into three equal parts (120 degrees is 1/3 of the distance around the damper circumference).
3. Rotate the crankshaft until No. 1 piston is on TDC at the end of the compression stroke. **Check the breakaway torque (torque required to turn nut in a counterclockwise direction)** of each stud nut. Replace the stud nut if the breakaway torque does not meet specifications. If, after replacing the stud nut, the breakaway torque still is not within specifications, replace the stud.
4. With No. 1 piston on TDC at the end of the compression stroke, adjust the intake and exhaust valve clearance for No. 1 cylinder. Loosen the rocker arm stud nut until there is end clearance in the push rod, then tighten the nut to just remove all the push rod to rocker arm clearance. This may be determined by rotating and/or moving the push rod with the fingers as the stud nut is tightened (Fig. 5). When the push rod to rocker arm clearance has been eliminated, tighten the stud nut an additional 1 turn to place the hydraulic lifter plunger in the desired operating range.
5. **Repeat this procedure for the remaining set of valves, turning the crankshaft with an auxiliary starter switch, 1/3 turn at a time, in the direction of rotation, while adjusting the valves in the firing order sequence, 1-5-3-6-2-4.**

   This procedure requires two complete turns of the crankshaft.
6. Operate the engine and check for rough engine idle or a noisy lifter(s). Valve clearance set too tight will cause rough idle and valve clearance set too loose will cause a noisy lifter(s). If it has been determined that these conditions are caused by improper valve clearance, readjust the affected valve(s).

ALTERNATE PROCEDURE

1. Follow steps 1, 2 and 3 in the Preferred Procedure.
2. Position the piston(s) on TDC after the compression stroke (See Step 2 above). Apply pressure to slowly bleed down the valve lifter until the plunger is completely bottomed (Fig. 6). While holding the valve lifter in the fully collapsed position, check the available clearance between the rocker arm and valve stem tip. If the clearance is not within specifications, rotate the rocker arm stud nut clockwise to decrease the clearance and counterclockwise to increase the clearance. **Normally one turn of the rocker arm stud nut will vary the clearance by 0.066 inch.**

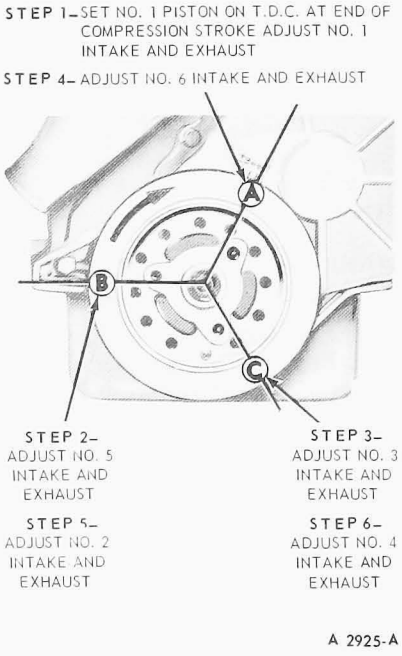

FIG. 4 240 and 300 Six Valve Clearance

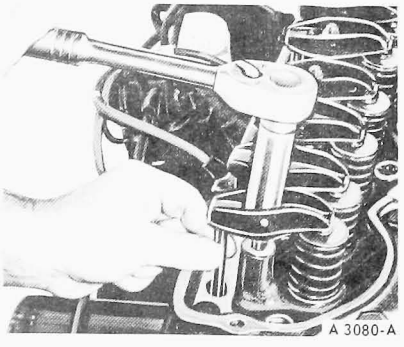

FIG. 5 Valve Clearance Adjustment

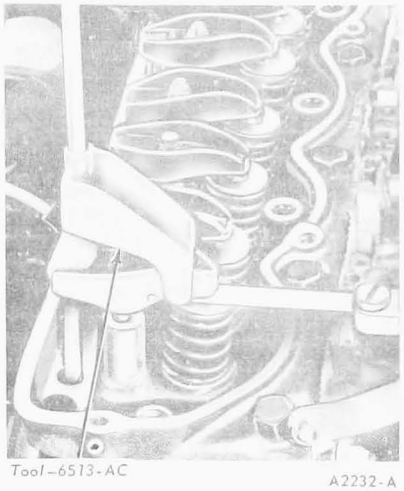

FIG. 6 Valve Clearance Check

REMOVAL AND INSTALLATION

When installing nuts or bolts that must be torqued, oil the threads with light weight engine oil. **Do not oil threads that require oil-resistant or water-resistant sealer.**

Refer to Part 21-01 for Repair and Cleaning and Inspection procedures.

ENGINE ASSEMBLY

ALL EXCEPT ECONOLINE

The engine removal and installation procedures are for the engine only without the transmission attached.

Removal

1. Drain the cooling system and the crankcase. Remove the hood or tilt the cab. Remove the air cleaner. On the C-Series, remove the oil filler tube.
2. Disconnect the battery positive cable. Disconnect the heater hose from the water pump and coolant outlet housing. Disconnect the flexible fuel line from the fuel pump.
3. Remove the radiator following the procedures in Group 27.
4. Remove the cooling fan, water pump pulley and fan drive belt.
5. Disconnect the accelerator cable and the choke cable at the carburetor. Remove the cable retracting spring.

On a vehicle with power brakes, disconnect the vacuum line at the intake manifold.

On a vehicle with an automatic transmission, disconnect the transmission kickdown rod at the bellcrank assembly.

6. Disconnect the exhaust manifold from the muffler inlet pipe. Disconnect the body ground strap and the battery ground cable at the engine.
7. Disconnect the engine wiring harness at the ignition coil, coolant temperature sending unit and oil pressure sending unit. Position the harness out of the way.
8. Remove the alternator mounting bolts and position the alternator out of the way, leaving the wires attached.

On a vehicle with power steering, remove the power steering pump from the mounting brackets and position it right side up and to one side, leaving the lines attached. If equipped with an air compressor, bleed the air system and disconnect the two air pressure lines at the compressor.

9. Raise the vehicle. Remove the starter (and the automatic transmission fluid filler tube bracket). Remove the engine rear plate upper right bolt.

On a vehicle with a manual-shift transmission, remove all the flywheel housing lower attaching bolts. Disconnect the clutch retracting spring.

On a vehicle with an automatic transmission, remove the converter housing access cover assembly. Remove the flywheel to converter nuts and secure the converter assembly in the housing. Remove the transmission oil cooler lines from the retaining clip at the engine. Remove the converter housing to engine lower attaching bolts.

10. On the F-100 and F-250, remove the insulator to intermediate support bracket nut from each engine front support. On other vehicles, remove the engine from support insulator bolt.
11. Lower the vehicle and position a transmission jack under the transmission to support it. Remove the remaining flywheel or converter housing to engine bolts.
12. Attach the engine lifting sling. Raise the engine slightly and carefully pull it from the transmission. Lift the engine out of the chassis.

Installation

1. Place a new gasket on the muffler inlet pipe.
2. Lower the engine carefully into the chassis. Make sure the dowels in the block engage the holes in the flywheel or converter housing.

On a vehicle with an automatic transmission, start the converter pilot into the crankshaft. Remove the retainer securing the converter in the housing.

On a vehicle with a manual-shift transmission, start the transmission input shaft into the clutch disc. It may be necessary to adjust the position of the transmission with relation to the engine if the transmission input shaft will not enter the clutch disc. **If the engine hangs up after the shaft enters, turn the crankshaft slowly (with the transmission in gear) until the shaft splines mesh with the clutch disc splines.**

3. Install the converter or flywheel housing upper attaching bolts. Remove the jack supporting the transmission.
4. Lower the engine until it rests on the engine support(s) and remove the lifting sling.
5. On the F-100 and F-250, install the engine left and right support

insulator to intermediate support bracket attaching nuts. Torque the nuts to specification. Install the front support bolt and nut on other vehicles. Torque to specification. Install the automatic transmission oil cooler lines bracket.

6. Install the remaining converter or flywheel housing attaching bolts. Connect the clutch return spring.
7. Install the starter and connect the starter cable. Attach the automatic transmission fluid filler tube bracket (if so equipped).

On a vehicle with an automatic transmission, install the transmission oil cooler lines in the bracket at the cylinder block.

8. Install the exhaust manifold to muffler inlet pipe lock washers and nuts. Torque the nuts to specifications.
9. Connect the engine ground strap and the battery ground cable.
10. On a vehicle with an automatic transmission, connect the kickdown rod to the bellcrank assembly on the intake manifold.

Connect the accelerator linkage to the carburetor and install the retracting spring. Connect the choke cable to the carburetor and hand throttle if so equipped.

On a vehicle with power brakes, connect the brake vacuum line to the intake manifold. Install the oil filler tube on the C-Series.

11. Connect the coil primary wire, oil pressure and coolant temperature sending unit wires, flexible fuel line, heater hoses and the battery positive cable.
12. Install the alternator on the mounting bracket.

On a vehicle with power steering, install the power steering pump on the mounting brackets.

13. Install the water pump pulley, spacer, cooling fan and drive belt. Torque the fan bolts to specifications.

Adjust all drive belt tension to specifications. Tighten the alternator, power steering pump and air compressor mounting bolts.

14. Install the radiator. Connect the radiator lower hose to the water pump and the radiator upper hose to the coolant outlet housing. Connect the air compressor lines.

On a vehicle with an automatic transmission, connect the oil cooler lines.

15. Install and adjust the hood.
16. Fill and bleed the cooling system. Fill the crankcase. Operate the engine at fast idle and check all hose connections and gaskets for leaks.
17. Adjust the carburetor idle speed and mixture.

On a vehicle with standard transmission, adjust the clutch pedal free travel.

On a vehicle with an automatic transmission, adjust the transmission control linkage. Check the fluid level and add as required to bring it to the proper level.

18. Install the air cleaner.

ECONOLINE

Removal

1. Disconnect the battery. Drain the cooling system.
2. Remove the engine cover. Remove the right hand seat.
3. Remove the hood lock support bracket. Remove the right and left headlight doors and remove the grille.
4. Remove the radiator upper and lower hoses and the transmission oil cooler lines if so equipped.
5. Remove the battery deflector. Remove the radiator.
6. Disconnect the heater hoses at the engine and position out of the way. Disconnect the engine wire harness and position out of the way (temp, oil, coil). Disconnect the wires at the starter solenoid, neutral switch and back-up lights.
7. Remove the engine oil dipstick. Remove the oil filler tube. Disconnect the hoses at the rocker arm cover and air filter and remove the assembly.
8. Remove the air cleaner and brackets as an assembly.
9. Disconnect the choke and accelerator cables at the carburetor.
10. Disconnect the axuiliary heater hose at the front heater. Remove the hoses from the right side of the engine and position them out of the way.
11. Disconnect the fuel line leading from the fuel pump to the carburetor at the fuel pump. Disconnect the wires at the alternator. Remove the alternator from the mounting brackets and position out of the way.
12. Disconnect the ground wires from the cylinder block. Disconnect the muffler inlet pipe from the exhaust manifold.
13. If equipped with automatic transmission, remove the three convertor housing-to-cylinder block upper bolts. Disconnect the starter ground wire.
14. Remove the automatic transmission vacuum line at the manifold if so equipped.
15. Raise the vehicle on the hoist. Drain the crankcase and remove the oil filter.
16. Disconnect the starter cable and remove the starter motor.
17. Position the engine support bar (Fig. 8) to the chassis and engine and adjust.

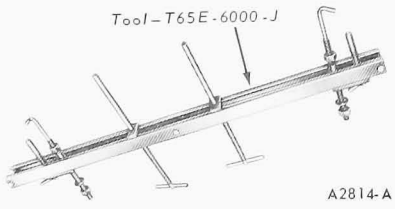

FIG. 8 Econoline Engine Support Bar

18. For vehicles equipped with a manual transmission, disconnect and remove the driveshaft and install a plug in the transmission extension housing. Disconnect the speedometer cable and housing from the transmission and secure it. Remove the bolt and nut attaching the rear engine support to the crossmember. Raise the transmission slightly, remove the crossmember attaching bolts and remove the crossmember. Remove the clutch equalizer arm bracket bolts from the engine. Disconnect the retracting spring and position the assembly out of the way. Remove the transmission to clutch housing bolts and remove the transmission from the vehicle.
19. For vehicles equipped with an automatic transmission, remove the adapter plate and inspection cover to convertor housing bolts. Remove the transmission dipstick tube-to-engine bolt. Remove the dipstick tube from the trans oil pan and drain the transmission. Remove the convertor to flex plate attaching nuts. Disconnect the oil cooler and vacuum lines at the transmission. Disconnect the driveshaft at the companion flange. Disconnect the speedometer cable and housing from the transmission. Disconnect the shift rod at the transmission lever. Position a jack to the transmission and raise the transmission slightly. Remove the nuts and bolts attaching the rear engine mount bracket to the crossmember. Remove the crossmember to side support bolts and nuts and remove the crossmember. Secure the transmission to the jack with safety chain. Remove the remaining transmission to cylinder block bolts. Remove the transmission from the

engine, lower on the jack and roll from under the vehicle.
20. Remove the engine front support insulator attaching nuts. Remove the bellcrank bolt from the side of the cylinder block and position out of the way.
21. Lower the vehicle on the hoist.
22. Remove the fan, spacer and water pump pulley. Position the engine lifting hook to the engine and raise the engine and remove it from the vehicle.
23. Remove the clutch housing from the engine if so equipped.

Installation

1. If so equipped, replace the clutch housing on the engine.
2. Raise the engine and position into vehicle, allowing the engine to rest on the engine front supports and the engine support tool (Fig. 8).
3. Raise the vehicle on the hoist.
4. For vehicles equipped with a manual transmission, raise the transmission, position to the clutch housing and install the attaching bolts. Torque the bolts to specifications. Raise the transmission, position the crossmember to the chassis and rear support and install the attaching bolts. Torque to specifications. Remove the jack. Remove the engine support tool. Connect the shift linkage at the transmission levers. Connect the speedometer cable and housing. Install and connect the drive shaft. Torque the bolts to specifications.
5. Install the engine front support insulator attaching bolts and torque to specifications.
6. Install the transmission bellcrank and torque the bolt in the cylinder block.
7. For automatic transmission equipped vehicles, position the transmission assembly to the cylinder block and install the attaching bolts. Torque to specifications. Position the crossmember to the rear mount bracket and frame sidemembers. Install and torque the attaching bolts and nuts to specifications. Remove the safety chain from the transmission and remove the jack. Remove the engine support bar from the vehicle. Install the convertor to flex plate attaching nuts and torque to specifications. Connect the oil cooler and vacuum lines to the transmission. Install the transmission dipstick and tube in the oil pan. Install the dipstick tube and vacuum line bracket attaching bolt to the cylinder block. Torque to specifications. Connect the driveshaft to the transmission companion flange. Connect the speedometer cable and housing to the transmission. Connect the shift rods to the transmission levers. Install the adapter plate and inspection cover attaching bolts to the convertor housing. Torque to specifications.
8. Install the starter and torque the attaching bolts to specificaions.
9. Connect the muffler inlet pipe at the exhaust manifold.
10. Position the clutch equalizer arm bracket to the transmission (if so equipped). Install and torque the attaching bolts to specifications. Connect the retracting spring.
11. Lower the vehicle on the hoist.
12. Install the remaining automatic transmission-to-cylinder block attaching bolts. Torque to specifications.
13. Install the ground wire and starter motor attaching bolt. Torque to specifications. Connect the starter cable at the starter motor.
14. Install the water pump pulley, spacer and fan assembly. Torque the bolts to specifications.
15. Position and install the alternator to its mounting brackets, install the drive belt and adjust the belt tension.
16. Connect the alternator wires and the back-up light and neutral switch leads.
17. Connect the alternator and battery ground wires to the cylinder block.
18. Connect the automatic transmission vacuum line to the manifold.
19. Connect the fuel line leading from the tank to pump at the fuel pump.
20. Connect the choke and accelerator cables to the carburetor. Install the dipstick tube in the oil pan. Install the tube attaching bolt in the cylinder head and torque to specifications.
21. Connect the neutral and back-up switch wires. Position the engine wire harness and connect the wires (coil, oil, temp.).
22. Connect the auxiliary heater hoses. Connect the oil filler tube to the rocker arm cover and install the retaining clamp. Position the filler tube bracket to the dash panel and install the attaching screws.
23. Install the radiator and battery deflector.
24. Connect the radiator upper and lower hoses and the oil cooler lines (if so equipped).
25. Install the grille in the vehicle. Install the head light doors. Install the hood lock bracket.
26. Fill the crankcase and cooling system. Fill the automatic transmission (if so equipped).
27. Connect the battery cable. Start the engine and check for leaks. Adjust the carburetor idle speed and fuel mixture. If applicable, adjust the automatic transmission linkage.
28. Install the air cleaner and brackets. Install the engine cover. Install the right front seat. Torque the bolts and nuts to specifications.

ENGINE FRONT SUPPORTS

The 240 and 300 CID engines are mounted on three engine mounts. Certain models have one front mount located at the front of the engine and two rear mounts located on each side of the clutch housing. The remaining models have two front mounts located on each side of the engine and one rear mount located on the transmission extension housing.

The mounts and their applications are shown in Figures 9 thru 14.

ECONOLINE

Removal

1. Raise the vehicle on a hoist.
2. Remove the front support insulator to crossmember nuts and washers from both insulators (Fig. 9).
3. Place a transmission jack under the engine oil pan and position a wood block between the jack and oil pan. Raise the engine just enough to take the weight off the crossmember.
4. Remove the insulator assembly to cylinder block bolts and remove the front support insulator(s).

Installation

1. Install the insulator(s) on the cylinder block and torque the bolts to specifications.
2. Lower the engine until the front support insulators engage the crossmember brackets. Remove the transmission jack.
3. Install the front support insulator to crossmember nuts and washers. Torque the nuts to specifications.
4. Lower the hoist.

SINGLE FRONT MOUNT

Removal

1. Remove the bolt that retains the support bracket to the insulators and crossmember (Fig. 10). Remove the washer, lower insulator and spacer.
2. Place a jack under the engine oil pan and position a wood block between the jack and oil pan. Raise the engine just enough to clear the upper insulator. Remove the upper insulator and insulator spacer (LN-600 only).

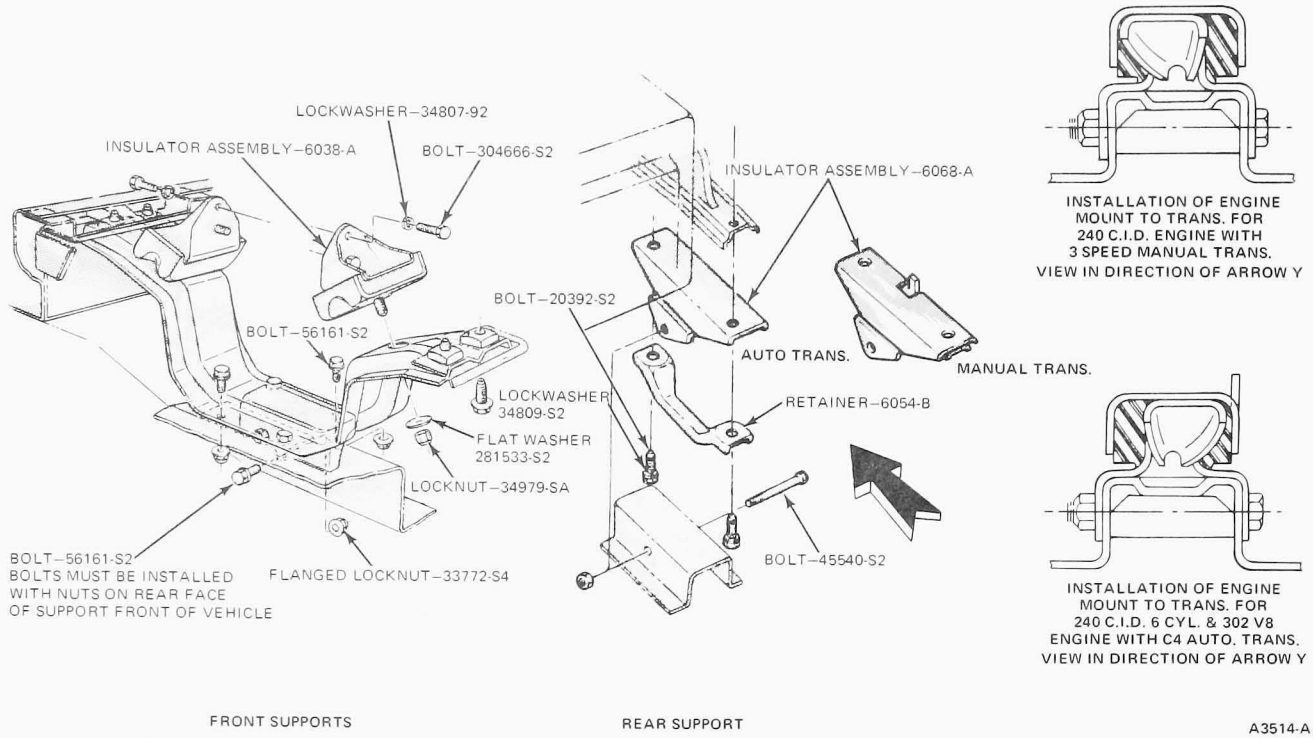

FIG. 9 Econoline Engine Supports

Installation

1. Install the upper insulator spacer (LN-600 only) and the upper insulator (Fig. 10).
2. Position the spacer, lower insulator and washer. Install the attaching nut snugly.
3. Lower the engine and remove the jack and wood block.
4. Torque the attaching nut to specifications.

DOUBLE FRONT MOUNT

The procedures given apply to either a right or left installation (Fig. 11).

Removal

1. Remove the mount to support bracket nut and lock washer. **If only one mount is being removed, loosen the other mount.**
2. Using a jack and a wood block placed under the oil pan, raise the engine to allow just enough clearance for removal of the mount(s).
3. Remove the mount(s) to engine bolts and lock washers. Remove the mount.

Installation

1. Position the mount on the engine. Install the mount-to-engine bolts and lock washers. Torque to specifications.
2. Lower the engine carefully to make sure the mount stud and pin engage the support bracket mounting hole.
3. Install the nut and lock washer on the mount stud. Torque the mount nut and bolts to specifications.

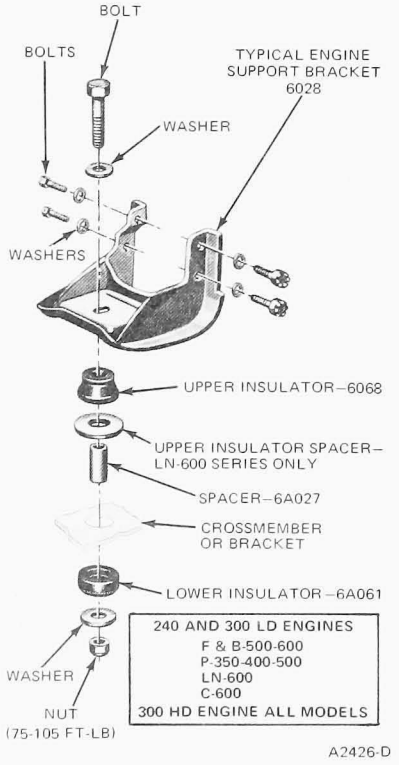

FIG. 10 Engine Single Front Support

4. If only one mount was removed, tighten the other mount.

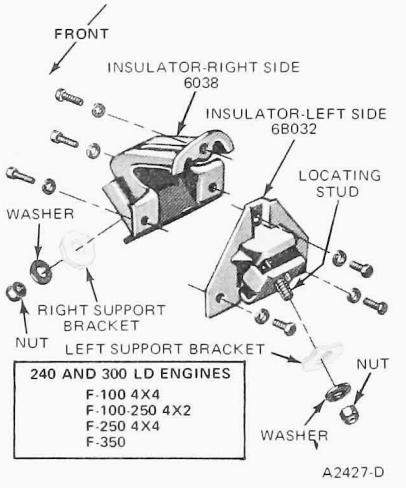

FIG. 11 Engine Double Front Support

ENGINE REAR SUPPORTS

SINGLE REAR MOUNT

Removal

1. Remove the attaching bolts, nut and washers (Fig. 12).
2. Raise the transmission slightly to provide clearance and remove the insulator and insulator retainer.

Installation

1. Position the insulator and retainer (Fig. 12).

The insulator cable is installed two ways. One application has the holes for the insulator-to-extension housing bolts

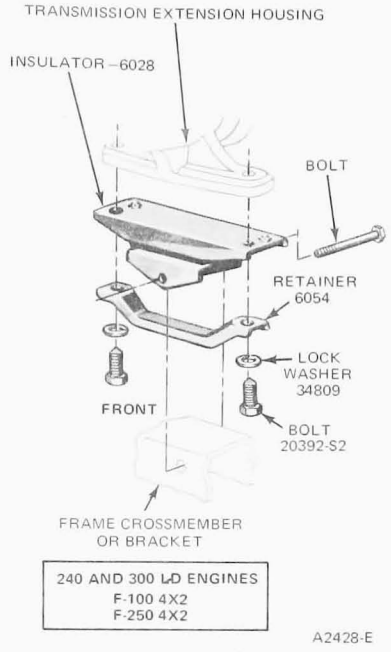

FIG. 12 Engine Single Rear Support

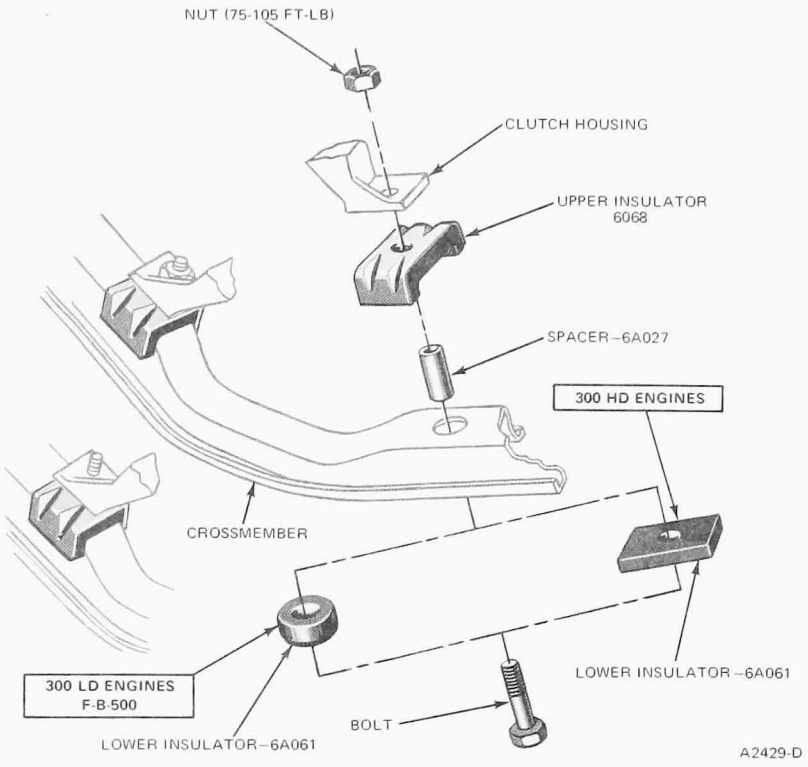

FIG. 13 Engine Double Rear Support

toward the front and is used on the F-100, 250 and 350. The other has the holes off center. It should be placed with the holes towards the front for the 240 Six with a light duty 3-speed manual transmission only. It should be placed with the holes towards the rear for the 240 and 300 LD Six with any transmission other than the light duty.

Install the insulator-to-extension housing, lock washers and bolts.

2. Lower the transmission and install the insulator-to-frame crossmember bolt. Torque the nut and bolts to specifications.

DOUBLE REAR MOUNT

The procedures given apply to either a right or left installation.

Removal

1. Remove the bolt and/or nut attaching the rear support insulator (Figs. 13 and 14). The P-Series trucks have a self-locking bolt. Remove the lower insulator and spacer. **If only one insulator is being removed, loosen the other insulator bolt.**
2. Place a transmission jack under the transmission and raise to clear the upper insulator(s). Remove the upper insulator(s).

Installation

1. Position the upper insulator (Figs. 13 and 14).
2. Install the lower insulator and spacer on the bolt. Position the bolt from the bottom into the crossmember and snug the nut.
3. Lower the engine and remove the jack. Torque the bolt to specifications.

ECONOLINE

Removal

1. Raise the vehicle on a hoist. Place a transmission jack under the transmission and raise it slightly so the transmission weight is not supported by the rear support insulator.
2. Remove the insulator to crossmember and transmission extension housing locknuts and bolts.
3. Remove the rear support insulator.

Installation

1. Position the rear support insulator between the transmission extension housing and vehicle crossmember. **Refer to Fig. 9 for the proper position of the support insulator.**
2. Install the support insulator attaching bolts and locknuts. Torque the locknuts to specifications.
3. Lower the transmission and remove the transmission jack. Lower the vehicle.

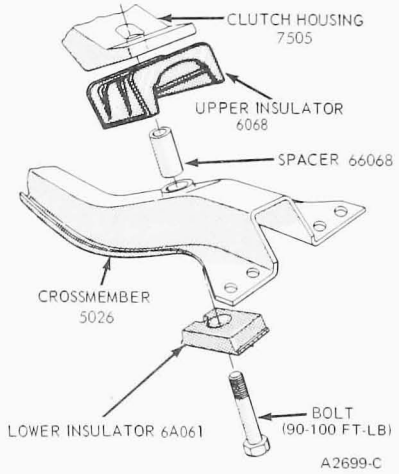

FIG. 14 Engine Double Rear Support—Typical

CRANKCASE VENTILATION SYSTEM

Removal

1. Remove the air cleaner.
2. Grasp the crankcase ventilation regulator valve and pull upwards to remove it from the rocker arm cover.
3. Remove the regulator valve from the vent hose and remove the vent hose from the inlet tube in the intake manifold.
4. Remove the inlet tube from the intake manifold.
5. Remove the air inlet hose from the

oil fill cap and carburetor air cleaner.

Installation

1. Install the inlet tube in the intake manifold.
2. Install the hose on the inlet tube in the intake manifold. Install the regulator valve in the hose.
3. Insert the regulator valve into the rocker arm cover mounting grommet.

Connect the air inlet hose to the oil fill cap and carburetor air cleaner.

4. Install the air cleaner. Operate the engine and check for leaks.

VALVE ROCKER ARM COVER AND ROCKER ARM

Removal

1. Raise the engine compartment cover.
2. Disconnect the inlet air hose at the oil fill cap. Remove the air cleaner.
3. Disconnect the accelerator cable at the carburetor. Remove the cable retracting spring. Remove the accelerator cable bracket from the cylinder head and position the cable and bracket assembly out of the way.
4. Remove the crankcase ventilation regulator valve from the valve rocker arm cover. Remove the cover bolts and remove the valve rocker arm cover.
5. Remove the valve rocker arm stud nut, fulcrum seat and rocker arm.

Inspect the rocker arm cover bolts for defective seals under the bolt heads and replace as necessary. If removal of the rocker arm stud is necessary, refer to the procedure under Cylinder Head Repairs in Part 21-01.

The valve rocker arm assembly is shown in Fig. 15.

Installation

1. Apply Lubriplate or equivalent to the top of the valve stem and at the push rod guide in the cylinder head.
2. Apply Lubriplate or equivalent to the rocker arm fulcrum seat and the fulcrum seat socket in the rocker arm. Install the valve rocker arm, fulcrum seat and stud nut. Adjust the valve clearance following the procedure in this Section under Valve Clearance Adjustment.
3. Clean the valve rocker arm cover and the cylinder head gasket surface. Place the new gasket in the cover making sure that the tabs of the gasket engage the notches provided in the cover.
4. Install the cover on the cylinder head. Make sure the gasket seats evenly all around the head. Partially tighten the cover bolts in sequence, starting at the middle bolts. Then torque the bolts to specifications in the same sequence.
5. Install the crankcase ventilation regulator valve in the rocker arm cover. Install the accelerator cable bracket on the cylinder head and connect the cable to the carburetor.
6. Connect the inlet air hose to the oil fill cap.

MANIFOLDS

Removal

1. Remove the air cleaner. Disconnect the choke cable at the carburetor. Disconnect the accelerator cable or rod at the carburetor. Remove the accelerator retracting spring.
2. On the LN-Series vehicle, disconnect the battery and remove the alternator.
3. On a vehicle with automatic transmission, remove the kick-down rod retracting spring. Remove the accelerator rod bellcrank assembly.
4. On C-Series vehicles, remove the engine oil dipstick and tube.
5. Disconnect the fuel inlet line and the distributor vacuum line from the carburetor.
6. Disconnect the muffler inlet pipe from the exhaust manifold.
7. Disconnect the power brake vacuum line (if so equipped).
8. Remove the bolts and nuts attaching the manifolds to the cylinder head. Lift the manifold assemblies from the engine. Remove and discard the gaskets.
9. To separate the manifolds, remove the nuts joining the intake and exhaust manifolds.

Installation

If the exhaust gas control valve requires replacement, follow the procedures in Part 21-01.

1. Clean the mating surfaces of the cylinder head and manifolds.
2. If one of the manifolds is to be replaced, remove the tube fittings from the discarded manifolds and install them in the new manifold as required. Also install new studs in the new manifold.
3. If the intake and exhaust manifolds have been separated, coat the mating surfaces lightly with graphite grease and place the exhaust manifold over the studs on the intake manifold. Install the lock washers and nuts. Tighten them finger tight.
4. Install a new intake manifold gasket.
5. Coat the mating surfaces lightly with graphite grease. Place the manifold assemblies in position against the cylinder head. **Make sure that the gaskets have not become dislodged. Install the attaching washers, bolts and nuts.** Torque the bolts and nuts to specifications in the sequence shown in Fig. 16.

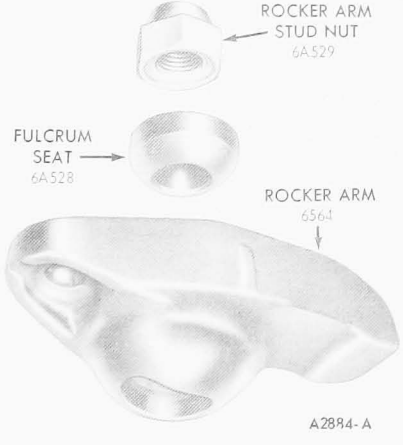

FIG. 15 Valve Rocker Arm Assembly

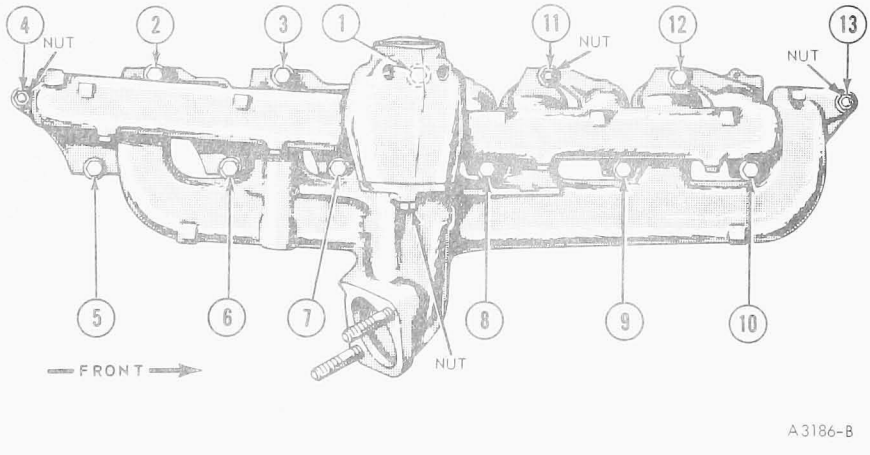

FIG. 16 Intake and Exhaust Manifolds Torque Sequence

If the intake and exhaust manifolds were separated, tighten the nuts joining them.

6. Position a new gasket on the muffler inlet pipe and connect the inlet pipe to the exhaust manifold. Torque the nuts to specifications.
7. Connect the crankcase vent hose to the intake manifold inlet tube and position the hose clamp.
8. Connect the fuel inlet line and the distributor vacuum line to the carburetor.
9. Connect the accelerator cable to the carburetor and install the retracting spring. Connect the choke cable to the carburetor.
10. On the LN-Series, install the alternator and belts and connect the battery.
11. On the C-Series, install the dipstick tube and dipstick.
12. On a vehicle with an automatic transmission, install the bellcrank assembly and kickdown rod retracting spring. Adjust the transmission control linkage.
13. Install the air cleaner. Adjust the engine idle speed and idle fuel mixture.

CYLINDER HEAD

Removal

If the cylinder head is to be replaced, follow the procedures under Cylinder Head Disassembly and Assembly. Transfer all valves, springs, spark plugs, etc., to the new cylinder head. Clean and inspect all parts, reface the valves and check valve guide clearances (refer to Part 21-01) before assembling the used parts to the new cylinder head.

1. Drain the cooling system.
2. Remove the air cleaner.
3. Remove the crankcase ventilation regulator valve from the rocker arm cover. Disconnect the vent hose at the intake manifold inlet tube.
4. Disconnect and remove the carburetor fuel inlet line and the distributor vacuum line.
5. Disconnect the choke cable at the carburetor and position the choke cable and housing out of the way.
6. Remove the accelerator cable retracting spring. Disconnect the accelerator cable from the carburetor.

On a vehicle with an automatic transmission, disconnect the kickdown rod at the carburetor.

7. Disconnect the radiator upper hose and heater hose at the coolant outlet elbow.
8. Disconnect the muffler inlet pipe from the exhaust manifold. Discard the inlet pipe gasket.
9. Remove the coil bracket attaching bolt and position the coil out of the way.
10. Remove the valve rocker arm cover. Loosen the rocker arm stud nuts so that the rocker arms can be rotated to one side.
11. Remove the valve push rods in sequence and identify them so that they can be installed in their original position.
12. Disconnect the spark plug wires at the spark plugs.
13. Remove the cylinder head bolts. Install the cylinder head lifting eyes in the locations shown in Fig. 17. Position a floor crane and attach the hoist and lifting sling to the lifting eyes. Lift the cylinder head and intake and exhaust manifolds assembly off the engine. **Do not pry between the head and block as the gasket surfaces may become damaged.**

Installation

1. Clean the cylinder head and cylinder block gasket surfaces. Clean the exhaust manifold and muffler inlet pipe gasket surfaces.
2. If the cylinder head was removed for a cylinder head gasket replacement, check the flatness of the head and block gasket surfaces (Part 21-01).
3. Position the gasket over the dowel pins on the cylinder block.
4. Install lifting eyes on the cylinder head in the location shown in Fig. 17 and use a floor crane and lifting sling to lift the cylinder head over the cylinder block. Lower it carefully until it is properly positioned on the block and dowel pins. Remove the hoist and lifting eyes.
5. Coat the threads of the cylinder head bolts with engine oil. Install the bolts.
6. Place a new cylinder head gasket on the block. Carefully position the cylinder head on the block and install the bolts. Torque the bolts in sequence (Fig. 17) to specifications. When cylinder head bolts have been tightened it is not necessary to retorque the bolts after extended operation.
7. Apply Lubriplate or equivalent to both ends of the push rods. Install the push rods in their original bores, positioning the lower end of the rods in the valve lifter sockets.
8. Apply Lubriplate or equivalent to the rocker arm fulcrum seat and the fulcrum seat socket in the rocker arm. Position the rocker arms and tighten the stud nuts just enough to hold the push rods in position. Adjust the valve clearance, following the procedure in this section.

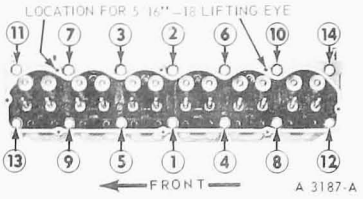

FIG. 17 Cylinder Head Bolts Torque Sequence

9. Clean the valve rocker arm cover. Place the new gasket in the cover making sure that the tabs of the gasket engage the notches provided in the cover. Position the cover, making sure that the gasket seats evenly around the cylinder head. Install the cover bolts and torque in sequence (starting in the center) to specifications.
10. Connect the spark plug wires to the spark plugs.
11. Connect the crankcase vent hose to the inlet tube in the intake manifold. Install the crankcase ventilation regulator valve in the valve rocker arm cover.
12. Position the fuel inlet line and the distributor vacuum line on the engine. Connect the distributor vacuum line to the distributor and carburetor. Connect the carburetor fuel inlet line to the carburetor and fuel pump.
13. Connect the accelerator cable to the carburetor. Install the accelerator cable retracting spring. Connect the choke cable to the carburetor.
14. On a vehicle with an automatic transmission, connect the kickdown rod to the carburetor.
15. Connect the radiator upper hose to the coolant outlet housing. Connect the heater hose to the coolant outlet housing, but do not tighten the clamp.
16. Fill and bleed the cooling system, then tighten the heater hose clamp.
17. Operate the engine until engine temperatures have stabilized. Adjust the engine idle speed and idle fuel mixture. Check for fuel, oil and coolant leaks.
18. Install the air cleaner.

VALVE SPRING, RETAINER AND STEM SEAL

Broken valve springs or defective valve stem seals and retainers may be replaced without removing the cylinder head providing damage to the valve or valve seat has not occurred.

Removal

1. Remove the air cleaner.
2. Remove the accelerator cable retracting spring. Disconnect the accelerator cable at the carburetor. Disconnect the choke cable at the carburetor.
3. Remove the crankcase ventilation regulator valve from the valve rocker arm cover and remove the valve rocker arm cover. Remove the applicable spark plug.
4. Crank the engine until the applicable piston is on TDC after the compression stroke.
5. Install an air line adapter in the spark plug hole (Fig. 18) and connect the air line.
6. Remove the applicable valve rocker arm stud nut, fulcrum seat, valve rocker arm and push rod. Install the stud nut and position the compressor tool as shown in Fig. 18. Compress the valve spring and remove the retainer locks, spring retainer and valve spring. Remove and discard the valve stem seal (Fig. 19).

If air pressure fails to hold the valve in the closed position during this operation, it can be presumed that the valve is not seating or is damaged. If this condition occurs, remove the cylinder head for further inspection.

7. **If air pressure has forced the piston to the bottom of the cylinder, any removal of air pressure will allow the valve to fall into the cylinder. A rubber band, tape or string wrapped around the end of the valve stem will prevent this condition and will still allow enough travel to check the valve for binds.**
8. Inspect the valve stem for damage. Rotate the valve and check the valve stem tip for eccentric movement during rotation. Move the valve up and down through normal travel in the valve guide and check the stem for binds. **If the valve has been damaged, it will be necessary to remove the cylinder head for repairs as outlined in Part 21-01.**
9. If the condition of the valve proved satisfactory, hold the valve in the closed position and apply air pressure within the cylinder.

Installation

1. Oil the valve stem with heavy engine oil and install a new valve stem seal (Fig. 19). Place the spring in position over the valve. **Be sure the closed coil end is next to the cylinder head.** Install the valve spring retainer. Compress the valve spring and install the valve spring retainer locks. Remove the compressor tool and stud nut.
2. Apply Lubriplate or equivalent to both ends of the push rod. Install the push rod. Apply Lubriplate or equivalent to the tip of the valve stem.
3. Apply Lubriplate or equivalent to the fulcrum seat and socket. Install the valve rocker arm, fulcrum seat and stud nut. Adjust the valve clearance following the procedure given in this Part under Valve Clearance Adjustment.
4. Turn off the air and remove the air line and adapter. Install the spark plug and connect the spark plug wire.
5. Clean the valve rocker arm cover. Place the new gasket in the cover making sure that the tabs of the gasket engage the notches provided in the cover. Install the cover, making sure that the gasket seats evenly around the cylinder head. Install the cover bolts and torque them in sequence (starting in the center) to specifications.
6. Connect the accelerator cable to the carburetor. Install the accelerator cable retracting spring. Connect the choke cable to the carburetor.
7. Install the crankcase ventilation regulator valve in the valve rocker arm cover. Install the air cleaner.

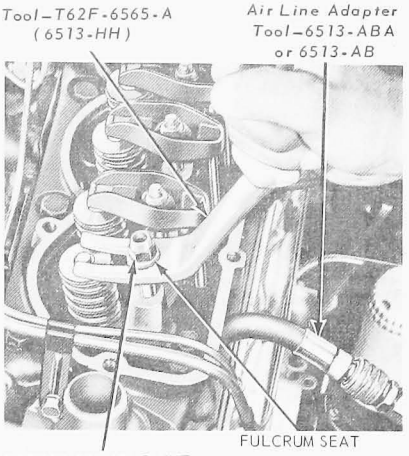

FIG. 18 Compressing Valve Spring—In-Chassis

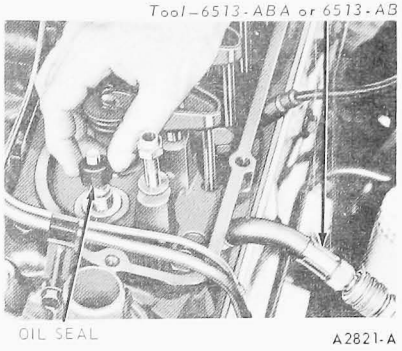

FIG. 19 Removing or Installing Valve Stem Seal

VALVE LIFTER

Removal

1. Remove the air cleaner. Remove the crankcase ventilation regulator valve from the valve rocker arm cover. On the C-Series, disconnect the oil filler tube at the rocker cover.
2. Disconnect the choke cable at the carburetor. Disconnect the accelerator and throttle cable at the carburetor. Remove the retracting spring.
3. Remove the coil bracket attaching bolt and position the coil out of the way.
4. Remove the valve rocker arm cover.
5. Disconnect the spark plug wires at the spark plugs and the secondary high tension wire from the coil. Remove the distributor cap and spark plug wire assembly.
6. Remove the valve push rod cover.
7. Loosen the rocker arm stud nut(s) until the rocker arm(s) can be disengaged from the push rod(s). Remove the push rod(s). Remove the valve lifter(s) with the tool shown in Fig. 20. If more than one push rod and valve lifter is removed,

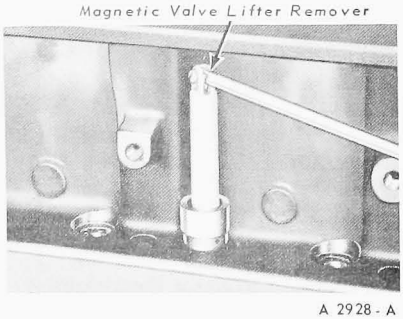

FIG. 20 Removing or Installing Valve Lifter

do it in sequence and place the parts in a rack so they can be installed in their original locations.

Refer to Part 21-01 for the testing procedures.

Installation

1. Clean the rocker arm cover, push rod cover, cylinder head and block gasket surfaces.
2. Apply Lubriplate or equivalent to the cam lobe contact surface of the valve lifter(s). Coat the rest of the valve lifter(s) with engine oil. Install the valve lifters with the tool shown in Fig. 20.
3. Apply Lubriplate or equivalent to both ends of the push rod(s). Install the push rod(s) in sequence. Engage the rocker arm(s) with push rod(s) and tighten the rocker arm stud nut(s) sufficiently to hold the push rod(s) in place. **Be sure each push rod is properly seated in the valve lifter socket.**
4. Adjust the valve clearance, following the procedure given in this Part.
5. Coat one side of a new push rod cover gasket with oil-resistant sealer and position the gasket, cemented side toward the push rod. Install the push rod cover. Torque the cover screws in sequence to specifications. Clean the rocker arm cover. Place the new gasket in the cover making sure that the tabs of the gasket engage the notches provided in the rocker arm cover. Install the cover and torque the bolts to specification. Install the crankcase regulator valve in the rocker arm cover. Connect the oil filler on the C-Series.
6. Position the coil on the cylinder head and install the attaching bolt.
7. Install the distributor cap and spark plug wire assembly. Connect the spark plug wires and coil secondary high tension wire.
8. Connect the accelerator cable and throttle cable to the carburetor. Install the cable retracting spring. Connect the choke cable to the carburetor.
9. Install the air cleaner. Start the engine and adjust the carburetor idle speed and fuel mixture.

WATER PUMP

Removal

1. Drain the cooling system. Loosen the alternator adjusting arm bolt and remove the alternator drive belt. On a vehicle with an air compressor, remove the compressor belt.
2. Remove the fan and pulley.
3. Disconnect the heater hose, radiator lower hose and radiator supply line at the water pump.
4. Remove the bolts attaching the water pump to the block. Remove the pump and gasket.

Installation

Before a water pump is re-installed, check it for damage. If it is damaged and requires repair, replace it with a new pump or install a rebuilt pump obtained from a Ford-Authorized Reconditioner.

1. If a new water pump is to be installed, remove the fittings from the old pump and install them on the new pump. Clean all gasket material from the mounting surfaces of the water pump and cylinder block.
2. Position a new gasket, coated on both sides with sealer, on the water pump.
3. Install the pump body on the block. Install the pump attaching bolts, coated with sealer and torque the bolts to specifications.
4. Connect the radiator lower hose, radiator supply line and heater hose. Install the pulley and fan. Install the alternator belt and adjust the belt tension. On a vehicle with an air compressor, install the air compressor belt and adjust the belt tension to specifications. Fill and bleed the cooling system. Operate the engine and check for leaks.

CYLINDER FRONT COVER AND FRONT OIL SEAL

Removal

1. Drain the cooling system and crankcase.
2. Remove the radiator.
3. Remove the alternator adjusting arm bolt, loosen the drive belt and swing the adjusting arm out of the way. Remove the fan, drive belts and pulley. It may be necessary to remove the air compressor belt and/or steering pump belt.
4. Remove the cam screw and washer from the end of the crankshaft and remove the damper (Fig. 21).
5. Remove the oil level dipstick. Remove the oil pan and related parts by following the procedure under Oil Pan Removal. Remove the oil pump screen and inlet tube assembly.
6. Remove the cylinder front cover and discard the gasket. It is good practice to replace the oil seal each time the cylinder front cover is removed.
7. Drive out the old seal with a pin punch. Clean out the recess in the cover.

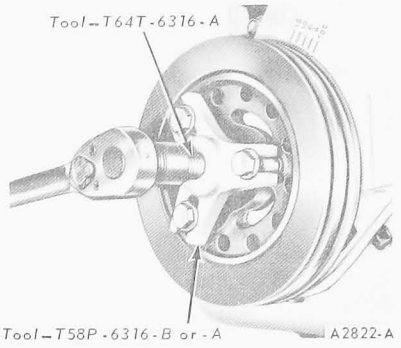

FIG. 21 Removing Crankshaft Damper

Installation

1. Coat a new seal with grease and install the seal (Fig. 22). Drive the seal in until it is fully seated in the recess. After installation, check to be sure the seal is properly positioned in the cover and the spring is properly positioned in the seal.
2. Clean the cylinder front cover and the gasket surfaces of the cylinder block. Coat the gasket surface of the block and cover with oil-resistant sealer. Position a new gasket on the block.

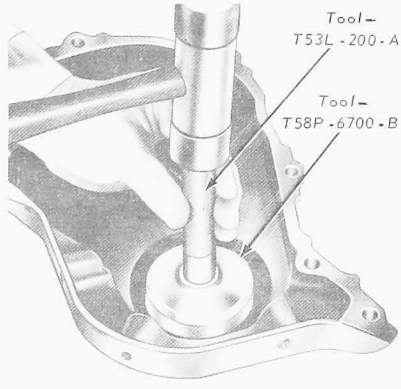

FIG. 22 Installing Crankshaft Front Oil Seal

3. Insert the small diameter end of the cover alignment tool in the bore of the cover. Position the cover and pilot assembly over the end of the crankshaft and against the block (Fig. 23), being careful to align the cover flush with the cylinder block oil pan gasket surface. Install the alternator adjusting arm and cylinder front cover bolts. Torque all the bolts except the power steering pump bracket bolts (if so equipped) to specifications.

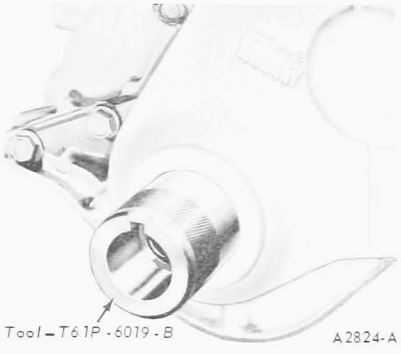

FIG. 23 Aligning Cylinder Front Cover

4. Lubricate the crankshaft with a white lead and oil mixture to facilitate installation and removal of the damper. Lubricate the front oil seal rubbing surface on the damper inner hub and the inner surface (sealing area) of the oil seal with Lubriplate or equivalent.
5. Align the damper keyway with the key on the crankshaft. Install the damper on the crankshaft as shown in Fig. 24.
6. Install the washer and cap screw. Torque the cap screw to specifications.

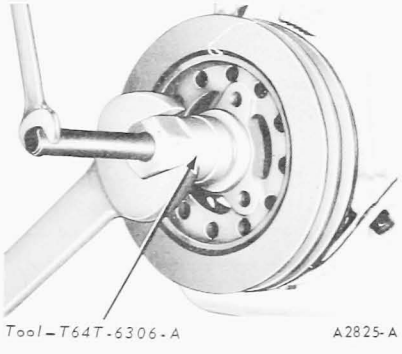

FIG. 24 Installing Damper

7. Apply oil-resistant sealer to the cavities between the rear main bearing cap and cylinder block (Fig. 25). Install a new oil pan rear seal in the rear main bearing cap and apply a bead of oil-resistant sealer to the tapered ends of the seal.
8. Install new side gaskets on the oil pan with oil-resistant sealer (Fig. 21). Position a new cylinder front cover seal on the oil pan.
9. Clean and install the oil pump screen and inlet tube assembly. Install the oil pan and related parts following the procedure under Oil Pan Installation. Install the oil level dipstick.
10. Install the water pump pulley, drive belts and fan. Adjust all drive belt tensions to specifications. Install the radiator.
11. Fill and bleed the cooling system. Fill the crankcase.
12. Operate the engine at fast idle and check all hose connections and gaskets for leaks.

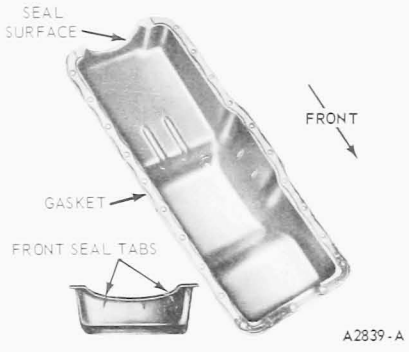

FIG. 25 Oil Pan Gaskets and Front Seal Installed

CAMSHAFT

The camshaft and related parts are shown in Fig. 26.

Removal

1. Drain the cooling system and the crankcase.
2. Remove the air cleaner. Remove the crankcase ventilation regulator valve from the rocker arm cover.
3. Disconnect the accelerator cable at the carburetor. Remove the accelerator cable retracting spring. Disconnect the choke cable at the carburetor. If equipped with a hand throttle cable, disconnect at the carburetor and position out of the way.
4. Remove the radiator. Remove the engine oil dipstick and tube on the C-Series truck and disconnect the oil filler hose from the rocker cover.
5. Remove the power steering belt. Remove the air compressor belt.
6. Loosen the alternator adjusting arm bolt and remove the drive belt and water pump pulley.
7. Disconnect the spark plug wires at the spark plugs and disconnect the secondary high tension wire at the ignition coil. Remove the distributor cap and spark plug wires as an assembly.
8. Disconnect the fuel outlet lines at the fuel pump. Remove the fuel pump mounting bolts and position the fuel pump out of the way.
9. Disconnect the vacuum line at the distributor and the primary wire at the coil. Remove the distributor.
10. Remove the valve rocker arm cover. Loosen the rocker arm stud nuts, move the rocker arms to one side and remove the push rods in sequence. Place the push rods in a rack so they can be installed in their original locations.
11. Remove the valve push rod cover; then remove the valve lifters in sequence, using the tool shown in Fig. 29. Place the valve lifters in a tray or rack to facilitate installation in the same sequence in which they were removed.
12. Remove the cap screw and washer from the end of the crankshaft. Remove the damper (Fig. 21).
13. Remove the oil pan and related parts by following the procedure under Oil Pan Removal. Remove the oil pump screen and inlet tube assembly.
14. Remove the cylinder front cover and discard the gasket.
15. Check the camshaft end play, the timing gear backlash and the timing gear runout (Part 21-01).
16. Turn the crankshaft to align the timing marks as shown in Fig. 27.
17. Remove the camshaft thrust plate screws (Fig. 28). Remove the camshaft. **Avoid damaging the camshaft lobes during removal.** Press the camshaft out of the gear in an Arbor Press (Fig. 29). Remove the key, thrust plate and spacer.

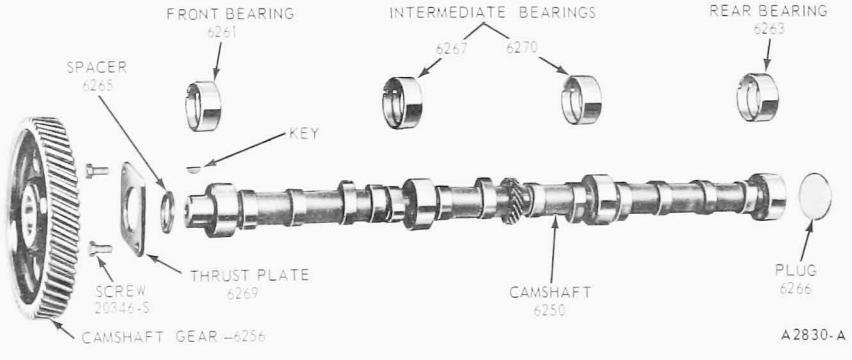

FIG. 26 Camshaft and Related Parts



FIG. 27 Aligning Timing Marks

Installation

If the camshaft end play, timing gear backlash and/or timing gear runout were excessive, make the necessary corrections before installing the camshaft.

1. Oil the camshaft bearing journals and apply Lubriplate or equivalent to all the lobes.
2. Install the camshaft, gear and thrust plate as an assembly, making sure that the timing marks are in alignment (Fig. 27).
3. Torque the thrust plate attaching screws to specifications.
4. Position the camshaft gear on the camshaft. Align the timing marks on the timing gears as shown in Fig. 27. Install the camshaft gear with the tool shown in Fig. 30. Be sure the gear and spacer are tight against the shoulder on the camshaft.
5. Crank the engine until the timing marks are aligned. **Do not turn the crankshaft again until the distributor is installed.**
6. Clean the cylinder front cover and cylinder block gasket surfaces. Install a new oil seal in the cylinder front cover. **Clean the crankshaft damper and inspect it, following the procedures in Part 21-01.** Install the cylinder front cover and damper, following the applicable procedure under Cylinder Front Cover Installation.
7. Clean the oil pump screen. Clean the oil pan and the gasket surfaces of the cylinder block. Install the oil pump screen and inlet tube and oil pan, following the procedures under Oil Pan Installation.
8. Lubricate the valve lifters with heavy engine oil and install the lifters (Fig. 20) in the same bores from which they were removed. Apply Lubriplate or equivalent to both ends of the push rods and install the push rods in the same sequence that they were removed. Be sure the push rods were seated in the valve lifter sockets.
9. Clean the valve push rod cover and cylinder block gasket surfaces. Apply oil-resistant sealer to one side of a new gasket and place the gasket on the push rod cover with the cemented side next to the cover. Install the cover and torque the bolts in sequence to specifications.
10. Apply Lubriplate or equivalent to the valve pad on the rocker arms. Oil the valve stems with heavy engine oil. Align the valve rocker arms with the valves and push rods. Tighten the rocker arm stud nuts sufficiently to hold the push rods in place. Adjust the valve clearance following instructions given in this Part under Valve Clearance Adjustment.
11. Clean the valve rocker arm cover and cylinder head gasket surface. Place the new gasket in the cover making sure that the tabs of the gasket engage the notches provided in the cover. Install the cover and torque the screws in sequence to specifications.
12. Set the distributor rotor so the points are about to open for No. 1 cylinder firing position. Install the distributor. Check the points. If the camshaft timing marks are still aligned (step 6 above), the points should be fully open in No. 1 cylinder firing position. If the points are not open, remove the dsitributor and rotate the shaft in the proper direction. Install the distributor and hold-down clamp.
13. Clean the fuel pump and cylinder block gasket surfaces. Install the fuel pump with a new gasket. Torque the mounting bolts to specifications. Connect the fuel outlet line to the fuel pump.
14. Install the distributor cap and spark plug wires as an assembly. Connect the spark plug wires to the plugs and the secondary high tension wire to the coil.
15. Install the crankcase ventilation regulator valve in the valve rocker arm cover. Connect the oil filler hose to the rocker cover on the C-Series. Install the accelerator cable housing bracket on the cylinder head. Connect the accelerator cable to the carburetor. Install the accelerator cable retracting spring. Connect the choke cable and, if so equipped, the hand throttle cable.
16. Install the water pump pulley, cooling fan and drive belt. Adjust the belt tension to specifications. Install the air compressor belt following procedures in Group 12. Install the power steering belt following procedures in Group 13.
17. Install the radiator. Connect the radiator upper hose to the thermostat housing cover. Connect the lower hose to the water pump. Install the hood latch support bracket. Install the radiator grille assembly.
18. Install the air cleaner.
19. Fill the crankcase and cooling system.
20. Start the engine and check for oil, coolant and fuel leaks. Adjust the ignition timing. Connect the distributor vacuum line to the distributor. Adjust the carburetor idle speed and fuel mixture.

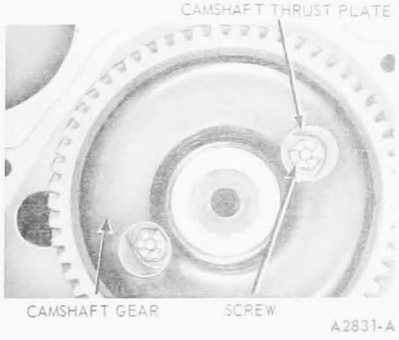

FIG. 28 Removing or Installing Camshaft

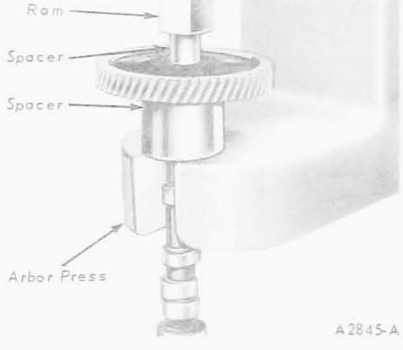

FIG. 29 Removing Fiber Camshaft Gear

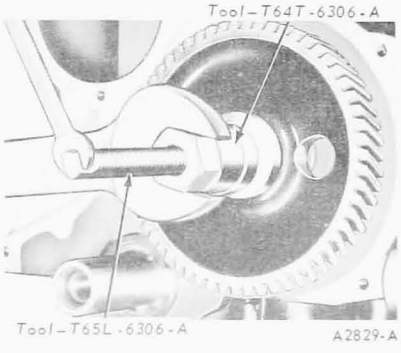

FIG. 30 Installing Camshaft Gear

TIMING GEARS

The engine has a gear driven camshaft. When the crankshaft and camshaft lose their timing relationship through the removal of the timing gears, interference may occur between the crankshaft and cam lobes. **Therefore, to prevent possible damage to the camshaft lobes, do not rotate the camshaft or crankshaft in the engine without the timing gears installed.**

CAMSHAFT GEAR—METAL GEAR

Removal

1. Drain the cooling system and crankcase.
2. Remove the cylinder front cover and oil pan, following the procedures under Cylinder Front Cover Removal.
3. Check the camshaft end play, the timing gear backlash and the timing gear runout (Part 21-01).
4. Crank the engine until the timing marks are aligned as shown in Fig. 27.
5. Install the gear puller as shown in Fig. 31 and remove the camshaft gear.

Installation

If the camshaft end play, timing gear backlash and/or timing gear runout were excessive, make the necessary corrections before installing the gear.

1. Be sure the key and spacer are properly installed. Align the gear keyway with the key and install the gear on the camshaft as shown in Fig. 30. Be sure that the timing marks line up on the camshaft and crankshaft gears.
2. Install the cylinder front cover and related parts, following the procedures under Cylinder Front Cover Installation.
3. Fill the crankcase and cooling system. Start the engine and adjust the ignition timing. Operate the engine at fast idle and check all hose connections and gaskets for leaks.

CAMSHAFT GEAR—FIBER GEAR

Removal

1. Drain the cooling system and crankcase.
2. Remove the radiator following procedures in Group 27.
3. Remove the cylinder front cover following the procedures under Camshaft Removal.
4. Check the camshaft end play, the timing gear backlash and the timing gear runout (Part 21-01).
5. Remove the camshaft, following the procedures under Camshaft Removal. Press the camshaft gear off the camshaft in an Arbor Press

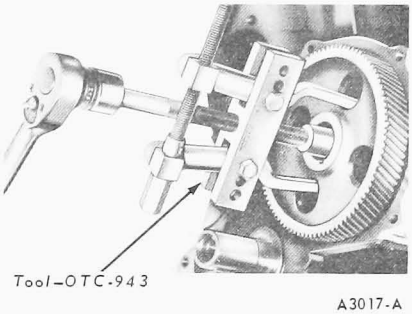

FIG. 31 Removing Metal Camshaft Gear

(Fig. 29). Remove the thrust plate, spacer and key.

Installation

If the camshaft end play, timing gear backlash and/or timing gear runout were excessive, make the necessary corrections before installing the gear.

1. Install the camshaft in the engine and install the spacer and thrust plate on the camshaft. Insert the key in the keyway. Position the camshaft gear on the camshaft with the timing marks aligned (Fig. 22) and install it as shown in Fig. 24. **Be sure the gear and spacer are tight against the shoulder on the camshaft and that the thrust plate can be moved freely.** Install the thrust plate screws and torque to specifications.
2. Install the cylinder front cover, oil pan and related parts, following the procedures under Camshaft Installation.
3. Install the radiator.
4. Fill the crankcase and the cooling systems. Start the engine and adjust the ignition timing. Operate the engine at fast idle and check all hose connections and gaskets for leaks.

CRANKSHAFT GEAR

Removal

1. Drain the cooling system and crankcase. Remove the radiator, following the procedure in Group 27.
2. Remove the cylinder front cover.
3. Remove the oil slinger from the crankshaft. Use the gear puller as shown in Fig. 32 and remove the crankshaft gear. Remove the key from the crankshaft.

Installation

1. Install the key in the crankshaft keyway. Install the crankshaft gear, using the tool shown in Fig. 33. Install the oil slinger.
2. Replace the crankshaft front oil seal and install the cylinder front cover, following the procedures under Cylinder Front Cover.
3. Install the radiator.
4. Fill the crankcase and the cooling systems. Start the engine and check all gaskets and hose connections for leaks. Adjust the ignition timing.

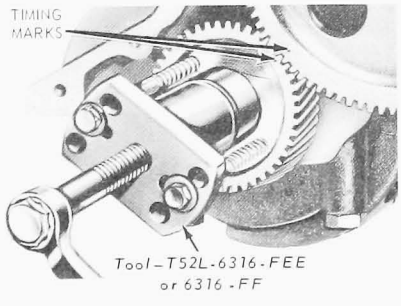

FIG. 32 Removing Crankshaft Gear

FLYWHEEL

Removal

1. Remove the transmission, following the procedure in Group 16 (Clutch and Manual Transmission) or Group 17 (Automatic Transmission).
2. On a manual-shift transmission, remove the clutch pressure plate and cover assembly and clutch disc, following the procedure in Group 16.
3. Remove the flywheel attaching bolts and remove the flywheel.

To check flywheel face runout or replace the flywheel ring gear, refer to Part 21-01.

Installation

1. Position the flywheel on the crankshaft flange. Coat the threads of the flywheel attaching bolts with oil-resistant sealer and install the bolts. Torque the bolts in sequence across from each other to specifications.
2. On a manual-shift transmission, install the clutch disc and the pressure plate and cover assembly following the procedure in Group 16.

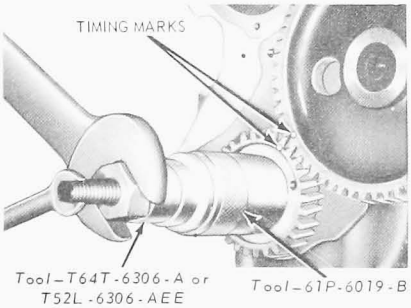

FIG. 33 Installing Crankshaft Gear

3. Install the transmission following the procedure in Group 16 or Group 17.

CLUTCH PILOT BUSHING

Inspection procedures are outlined under Crankshaft Cleaning and Inspection in Part 21-01.

Removal

1. Remove the transmission from the engine, following the procedure in Group 16.
2. Remove the pressure plate and cover assembly and clutch disc following the procedure in Group 16.
3. Remove the clutch pilot bushing (Fig. 34).
4. Wipe any lubricant from the pilot bushing bore. It is not necessary to lubricate the new bushing or transmission input shaft.

Installation

1. Install the clutch pilot service bushing (Fig. 35).
2. Install the clutch disc and the pressure plate assembly following the procedure in Group 16.
3. Install the transmission, following the procedure in Group 16.

CAMSHAFT REAR BEARING BORE PLUG

Removal

1. Remove the transmission and flywheel housing, following the procedures in Group 16 (Manual Transmission) or Group 17 (Automatic Transmission). On a manual-shift transmission, remove the clutch pressure plate and disc following the procedures in Group 16.
2. Remove the flywheel attaching bolts. Remove the flywheel and the engine rear cover plate.

Installation

1. Replace the core plug as detailed in Part 21-01.

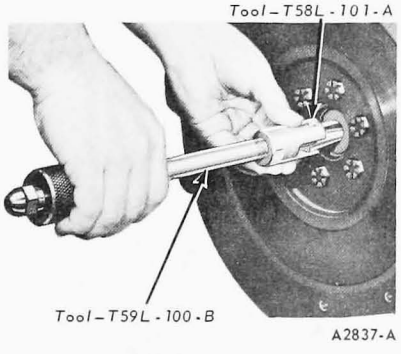

FIG. 34 Removing Clutch Pilot Bushing

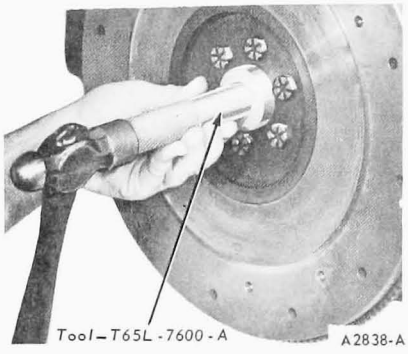

FIG. 35 Installing Clutch Pilot Bushing

2. Install the engine rear cover plate and flywheel. Coat the flywheel attaching bolts with oil-resistant sealer and install the bolts snug. Torque the flywheel bolts in sequence to specifications. On a vehicle with a manual-shift transmission, install the clutch pressure plate and disc and transmission, following the procedure in Group 16. On a vehicle with an automatic transmission, install the transmission and converter housing following the procedure in Group 17.

OIL PAN

Removal

1. Drain the crankcase.
   On the F-100-250, also drain the cooling system.
2. Remove the radiator from the F-100-250 following procedures in Group 27.
3. Raise the vehicle on a hoist.
   Disconnect the starter cable at the starter on the F-100-250 and remove the attaching bolts and starter.
4. On the F-100-250, remove the engine front support insulator to support bracket nuts and washers on both supports. Raise the front of the engine with a transmission jack and wood block and place 1-inch thick wood blocks between the front support insulators and support brackets. Lower the engine and remove the transmission jack.
5. Remove the oil pan attaching bolts. Remove the oil pump inlet tube attaching bolts. Remove the inlet tube and screen assembly from the oil pump and leave it in the bottom of the oil pan. Remove the oil pan and gaskets. Remove the inlet tube and screen from the oil pan.

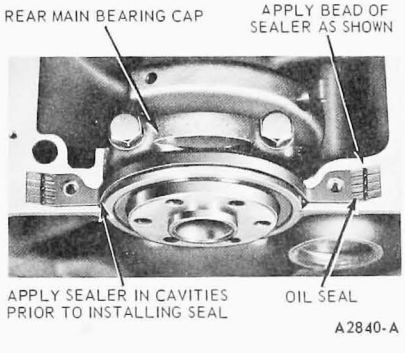

FIG. 36 Installing Oil Pan Rear Seal

Installation

1. Clean the gasket surfaces of the oil pump, oil pan and cylinder block. Remove the rear main bearing cap to oil pan seal and cylinder front cover to oil pan seal. Clean the seal grooves.
2. Apply oil-resistant sealer in the cavities between the bearing cap and cylinder block (Fig. 36). Install a new seal in the rear main bearing cap and apply a bead of oil-resistant sealer to the tapered ends of the seal.
3. Install new side gaskets on the oil pan with oil-resistant sealer (Fig. 25). Position a new oil pan to cylinder front cover seal on the oil pan.
4. Clean the inlet tube and screen assembly and place it in the oil pan.
5. Position the oil pan under the engine. Install the inlet tube and screen assembly on the oil pump with a new gasket. Torque the screws to specifications. Position the oil pan against the cylinder block and install the attaching bolts. Torque the bolts in sequence to specifications.
6. Raise the F-100-250 engine with a transmission jack and remove the wood blocks from the engine front supports. Lower the engine until the front support insulators are

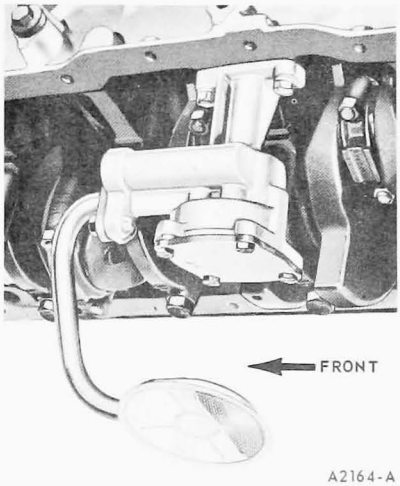

FIG. 37 Oil Pump Installed

positioned on the support brackets. Install the washers and nuts on the insulator studs and torque the nuts to specifications.
7. Install the starter on the F-100-250 and connect the starter cable.
8. Lower the vehicle. Install the radiator following procedures in Group 27.
9. Fill the crankcase and cooling system.
10. Start the engine and check for coolant and oil leaks.

OIL PUMP

Removal
1. Remove the oil pan following the procedures under Oil Pan Removal.
2. Remove the oil pump attaching bolts (Fig. 37). Discard the gasket.

Installation
1. Prime the oil pump by filling the inlet opening with oil and rotate the pump shaft until oil emerges from the outlet opening.
2. Coat a new oil pump gasket with oil-resistant sealer and position it on the oil pump.
3. Install the oil pump on the cylinder block. Torque the attaching bolts to specifications.

CRANKSHAFT REAR OIL SEAL

If the crankshaft rear oil seal replacement is the only operation being performed, it can be done in the vehicle as detailed in the following procedure. **If the oil seal is being replaced in conjunction with a rear main bearing replacement, the engine must be removed from the vehicle and installed on a work stand (Fig. 38).**

Removal
1. Remove the starter.
2. Remove the transmission from the vehicle, following the procedures in Group 16 (manual-shift transmission) or Group 17 (Automatic transmission).
3. On a manual-shift transmission remove the pressure plate and cover assembly and the clutch disc following the procedure in Group 16.
4. Remove the flywheel attaching bolts and remove the flywheel and engine rear cover plate.
5. Use an awl to punch two holes in the crankshaft rear oil seal. Punch the holes on opposite sides of the crankshaft and just above the bearing cap to cylinder block split line. Install a sheet metal screw in each hole. Use two large screwdrivers or small pry bars and pry against both screws at the same time to remove the crankshaft rear oil seal. It may be necessary to place small blocks of wood against the cylinder block to provide a fulcrum point for the pry bars. **Use caution throughout this procedure to avoid scratching or otherwise damaging the crankshaft oil seal surface.**
6. Clean the oil seal recess in the cylinder block and main bearing cap.

Installation
1. **Clean, inspect and polish the rear oil seal rubbing surface on the crankshaft, following the procedures in Part 21-01.** Coat a new oil seal and the crankshaft with a light film of engine oil. Start the seal in the recess and install it with the tool as shown in Fig. 39. Keep the tool straight with the centerline of the crankshaft and install the seal until the tool contacts the cylinder block surface. **Remove the tool and inspect the seal to be sure it was not damaged during installation.**
2. Install the engine rear cover plate. Position the flywheel on the crankshaft flange. **Coat the threads of the flywheel attaching bolts with oil-resistant sealer and install the bolts. Torque the bolts in sequence across from each other to specifications.**
3. On a manual-shift transmission, install the clutch disc and the pressure plate assembly following the procedure in Group 16.
4. Install the transmission, following the procedure in Group 16 (manual-shift transmission), or Group 17 (automatic transmission). **Do not adjust the transmission linkage.**

MAIN BEARING

Do not file or lap bearing caps or use shims to obtain the proper bearing clearance.

Bearings are available for service in standard sizes or 0.001 and 0.002 inch undersize. Refer to the Parts Catalog for the available sizes. Undersize bearings are available for use on journals that have been refinished.

If the rear main bearing is to be replaced, it will be necessary to remove the engine, install it on a work stand, replace the main bearing and replace the crankshaft rear oil seal.

Removal
1. Drain the crankcase. Remove the oil pan and oil pump, following the procedure under Oil Pan Removal.
2. **Replace one bearing at a time, leaving the other bearings securely fastened.** Remove the main bearing cap to which new bearings are to be installed.
3. Insert the upper bearing remover (tool 6331) in the oil hole in the crankshaft journal.

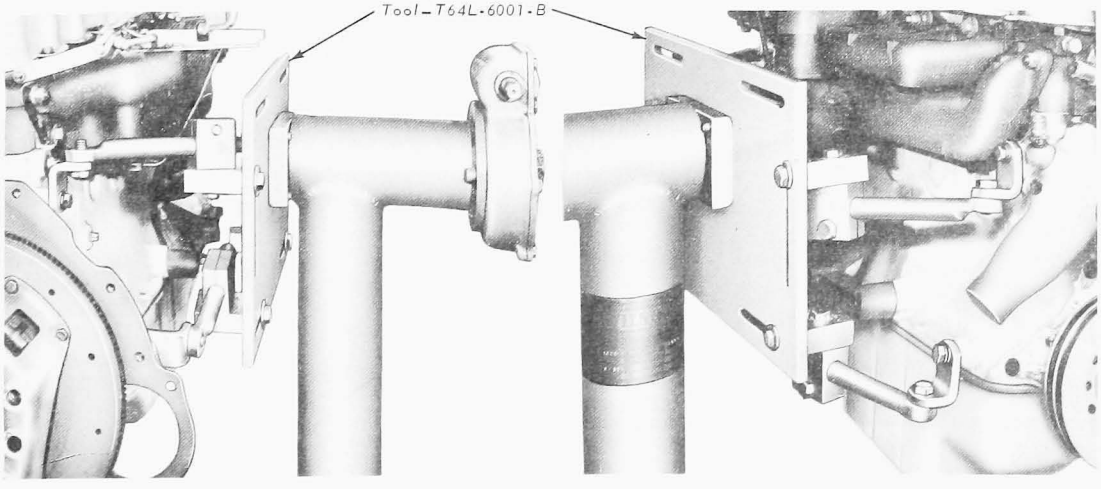

FIG. 38 Engine Mounted on Work Stand—Typical

4. Rotate the crankshaft in the direction of engine rotation to force the bearing out of the block.
5. Clean the crankshaft journal. When replacing standard bearings with new bearings, it is good practice to first try to obtain the proper clearance with standard bearings or a combination of a standard bearing and a 0.001 or 0.002 inch undersize bearing.

Installation

1. **The upper and lower bearing halves are not interchangeable. The upper half is drilled and grooved to provide entry of oil.** To install the upper main bearing, place the plain end of the bearing over the shaft on the locking tang side of the block and partially install the bearing so that tool 6331 can be inserted in the oil hole in the crankshaft journal. With tool 6331 positioned in the oil hole, rotate the crankshaft slowly in the opposite direction of engine rotation until the bearing is seated. Remove the tool.

   Select-fit the bearing for proper clearance following procedures given under Fitting Main and Connecting Rod Bearings in Part 21-01.
2. After the bearing has been fitted, apply a light coat of engine oil to the journal and bearings, then install the bearing cap. Torque the cap bolts to specifications.
3. Repeat the procedure for the remaining bearings that require replacement.
4. If the thrust bearing cap (No. 5 main bearing) has been removed, install it as follows:

   Install the thrust bearing cap with the bolts finger-tight. Pry the crankshaft forward against the thrust surface of the upper half of the bearing (Fig. 40). Hold the crankshaft forward and pry the thrust bearing cap to the rear. This will align the thrust surfaces of both halves of the bearing. Retain the forward pressure on the crankshaft. Torque the cap bolts to specifications.
5. **If the rear main bearing is replaced (on a work stand), apply a bead of oil-resistant sealer in each corner of the rear main bearing cap saddle the full length of the saddle. Be sure the main bearing is fitted and the cap bolts torqued to specifications before installing the new crankshaft rear oil seal.**
6. Clean the oil pump inlet tube screen. Prime the oil pump by filling the inlet opening with oil and rotate the pump shaft until the oil emerges from the outlet opening.
7. Install the oil pump and oil pan, following the procedure under Oil Pan Installation.
8. Fill the crankcase and cooling system. Start the engine and check for oil pressure. Operate the engine at fast idle and check for oil and coolant leaks.

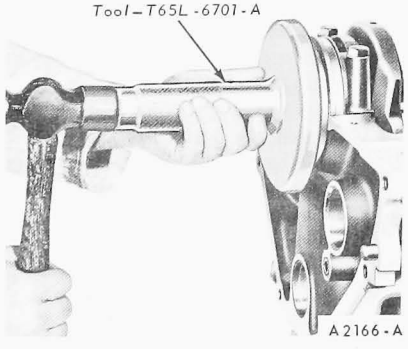

FIG. 39 Installing Crankshaft Rear Oil Seal

CONNECTING ROD BEARING

Removal

1. Drain the crankcase. Remove the oil pan and oil pump, following the procedure under Oil Pan Removal.
2. Turn the crankshaft until the connecting rod to which new bearings are to be fitted is down. Remove the connecting rod cap.

Installation

1. Install the bearing inserts in the connecting rod and cap with the tangs fitted in the slots.
2. Pull the connecting rod assembly down firmly on the crankshaft journal.

   Fit the bearing following procedures given in Part 21-01 under Fitting Main and Connecting Rod Bearings.
3. After the bearing has been fitted, clean and apply a light coat of engine oil to the journal and bearings. Install the connecting rod cap and torque the nuts to specifications.
4. Repeat the procedure for the remaining connecting rods that require new bearings.
5. Install the oil pan and oil pump, following the procedures under Oil Pan Installation in this section.
6. Fill the crankcase and cooling system. Start the engine and check for oil pressure. Operate the engine at fast idle and check for oil and coolant leaks.

   Remove the bearing inserts from the rod and cap.
3. Be sure the bearing inserts and the bearing bore in the connecting rod

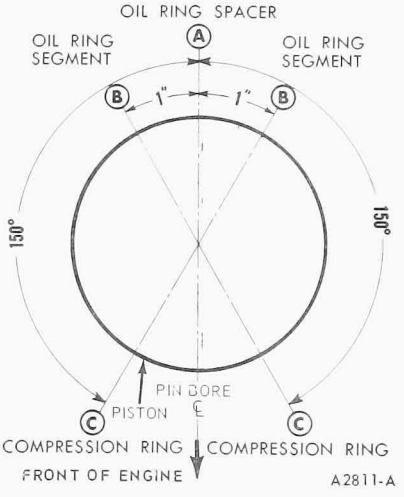

FIG. 41 Piston Ring Gap Spacing

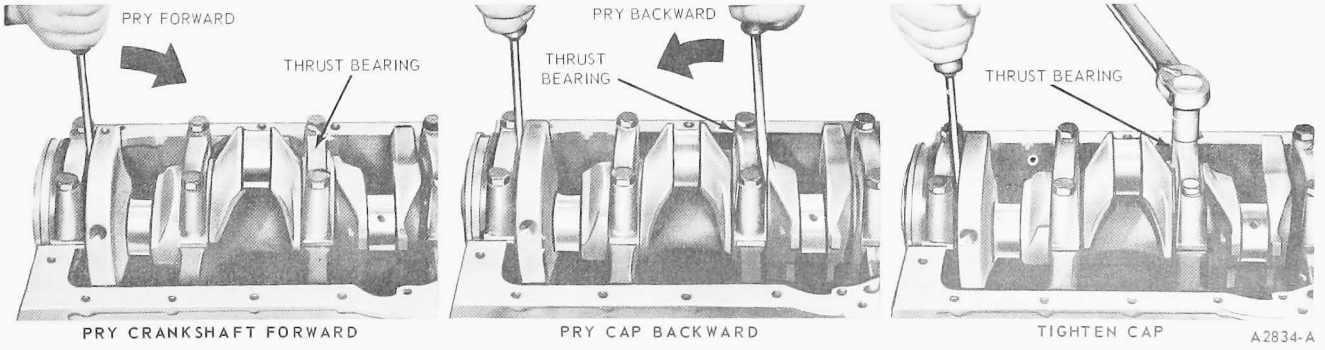

FIG. 40 Aligning Thrust Bearing

and cap are clean. Foreign material under the inserts will distort the bearing and cause a failure.

4. Clean the crankshaft journal. **When replacing standard bearings with new bearings, it is good practice to first try to obtain the proper clearance with standard bearings.**

Refer to Part 21-01 for the cleaning and inspection procedures.

PISTONS AND CONNECTING RODS

Removal

1. Drain the cooling system and the crankcase.
2. Refer to Cylinder Head Removal and remove the cylinder head and related parts.
3. Remove the oil pan following the procedure under Oil Pan Removal. Remove the oil pump inlet tube and the oil pump.
4. Turn the crankshaft until the piston to be removed is at the bottom of the stroke and place a cloth on the piston head to collect the cuttings. Remove any ridge and/or deposits from the upper end of the cylinder bore with a ridge cutter. Follow the instructions furnished by the tool manufacturer. **Never cut into the ring travel area in excess of 1/32 inch when removing ridges.**
5. Make sure all the connecting rod caps are marked so that they can be installed in their original positions. Remove the connecting rod cap.
6. Push the connecting rod and piston assembly out the top of the cylinder with the handle end of a hammer. Avoid damage to the crankshaft journal or the cylinder wall when removing the piston and rod.

Installation

1. Clean the oil pump inlet tube screen and the oil pan and block gasket surfaces.
2. Oil the piston rings, pistons and cylinder walls with light engine oil.
3. **Be sure to install the pistons in the same cylinders from which they were removed or to which they were fitted. The connecting rods and bearing caps are numbered from 1 to 6 beginning at the front of the engine. The number on the connecting rod and bearing cap must be on the same side of rod when installing in the cylinder bore. If a connecting rod is ever transferred from one cylinder block to another or from one cylinder to another, new bearings should be fitted and the connecting rod should be re-numbered to correspond with the new cylinder number.**

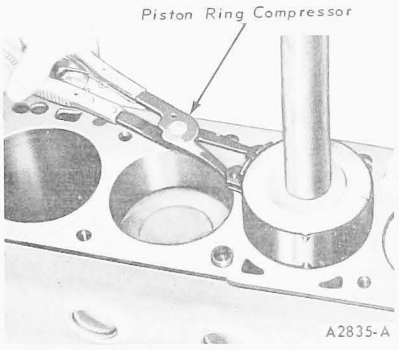

FIG. 42 Piston Installation

4. Make sure the ring gaps are properly spaced around the circumference of the piston (Fig. 41). Oil the rings, then install a piston ring compressor on the piston. Make sure that the indentation in the head of piston is toward the front, then push the piston into its bore with the handle end of a hammer until it is slightly below the top of the cylinder (Fig. 42). Be sure to guide the connecting rods to avoid damaging the crankshaft journals.
5. Check the clearance of each bearing following the procedure under Connecting Rod Bearing Replacement.
6. After the bearings have been fitted, apply a light coat of engine oil to the journals and bearings.
7. Turn the crankshaft throw to the bottom of its stroke, then push the piston all the way down until the connecting rod bearing seats on the crankshaft journal. Install the connecting rod cap. Torque the nuts to specifications.
8. After the piston and connecting rod assemblies have been installed, check the connecting rod side clearance on each crankshaft journal (Fig. 43).
9. Prime the oil pump by filling the inlet opening with oil and rotate the pump shaft until oil emerges from the outlet opening. Install the oil pump and the oil pump inlet tube. Install the oil pan and related parts.
10. Refer to Cylinder Head Installation and install the cylinder head and related parts. Adjust the valve clearance as described in this Part.
11. Fill and bleed the cooling system. Fill the crankcase.
12. Start the engine and check for oil pressure. Operate the engine at fast idle and check for oil and coolant leaks.

CRANKSHAFT

The crankshaft and related parts are shown in Fig. 44.

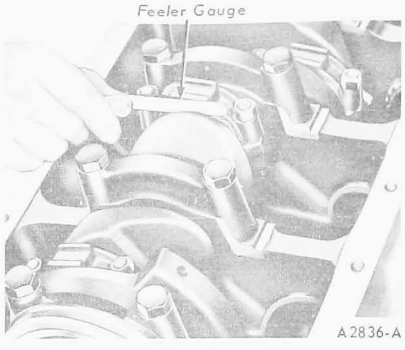

FIG. 43 Checking Connecting Rod Side Clearance

13. Operate the engine until engine temperatures have stabilized. Check and adjust the ignition timing. Adjust the engine idle speed and fuel mixture.

On a vehicle with an automatic transmission, adjust the transmission control linkage.

Removal

1. Install the engine on a work stand. Remove the spark plugs to allow easy rotation of the crankshaft.
2. Remove the oil level dipstick.
3. Remove the crankshaft damper attaching bolt and lock washer. Remove the crankshaft damper (Fig. 21).
4. Remove the cylinder front cover and gasket.
5. Remove the flywheel and engine rear cover plate.
6. Turn the engine on the work stand so that the bottom of the engine is up. Remove the oil pan, gaskets and seals. Remove the oil pump and inlet tube assembly. Discard the oil pump gasket.
7. Use an awl to punch two holes in the crankshaft rear oil seal. Punch the holes on opposite sides of the crankshaft and just above the bearing cap to cylinder block split line. Install a sheet metal screw in each hole. Use two large screwdrivers or small pry bars and pry against both screws at the same time to remove the crankshaft rear oil seal. It may be necessary to place small blocks of wood against the cylinder block to provide a fulcrum point for the pry bars. **Use caution throughout this procedure to avoid scratching or otherwise damaging the crankshaft oil seal surface.**
8. **Make sure all bearing caps (main and connecting rod) are marked so that they can be installed in their original locations.** Turn the crankshaft until the connecting rod from which the cap is being removed

is at the bottom of the stroke. Remove the connecting rod cap and bearings. Push the connecting rod and piston assembly up in the cylinder. **Do not turn the crankshaft completely around as the rod bolts may damage the crankpin journals.** Repeat this procedure and remove all connecting rod caps.

9. Remove the clutch pilot bushing if necessary (Fig. 34).
10. Align the timing marks (Fig. 27). Remove the crankshaft gear (Fig. 32).
11. Remove the main bearing caps and bearings.
12. Carefully lift the crankshaft out of the cylinder block so that the thrust bearing surfaces are not damaged. **Handle the crankshaft with care to avoid possible fracture or damage to the finished surfaces.**

Refer to Part 21-01 for the cleaning and inspection procedures. Be sure the oil seal surfaces on the crankshaft and crankshaft damper are properly cleaned.

To refinish journals, dress minor imperfections, etc., refer to Part 21-01.

Installation

1. Remove the main bearing inserts from the block and bearing caps.
2. Remove the bearing inserts from the connecting rod caps.
3. Clean the crankshaft rear oil seal recess in the cylinder block and rear main bearing cap.
4. If the crankshaft main bearing journals have been refinished to a definite undersize, install the correct undersize bearings. Be sure the bearing inserts and bearing bores are clean. Foreign material under the inserts will distort the bearing and cause a failure.
5. Place the upper main bearing inserts in position in the bore with the tang fitting in the slot provided. Be sure the oil holes in the bearing inserts are aligned with the oil holes in the cylinder block transverse webs.
6. Install the lower main bearing inserts in the bearing caps with the tang fitted in the slot.
7. Carefully lower the crankshaft into place. **Be careful not to damage the bearing surfaces.**
8. Check the clearance of each main bearing following procedures given in Part 21-01 under Fitting Main and Connecting Rod Bearings.
9. After the bearings have been installed, apply a light coat of heavy engine oil to the journals and bearings. Install all the bearing caps, except the thrust bearing cap (No. 5 bearing). **Be sure that the main bearing caps are installed in their original locations.** Torque the bearing cap bolts to specifications.
10. Install the thrust bearing cap with the bolts finger-tight.
11. Pry the crankshaft forward against the thrust surface of the upper half of the bearing (Fig. 40).
12. Hold the crankshaft forward and pry the thrust bearing cap to the rear. This will align the thrust surfaces of both halves of the bearing.
13. Retain the forward pressure on the crankshaft. Torque the cap bolts to specifications.
14. Check the crankshaft end play (refer to Part 21-01).
15. If the end play exceeds the wear limit, replace the thrust bearing. If the end play is less than the minimum limit, inspect the thrust bearing faces for scratches, burrs, nicks or foreign matter. If the thrust faces are not damaged or dirty, they probably need re-aligning. Install the thrust bearing and align the faces following the recommended procedure (Steps 8 thru 11). Then check the end play.
16. Coat a new crankshaft rear oil seal with oil and install it (Fig. 33). Inspect the seal to be sure it was not damaged during installation.
17. Install the bearing inserts in the connecting rods and caps. Check the clearance of each bearing following the procedure under Connecting Rod Bearing Replacement.
18. If the bearing clearances are to specifications, apply a light coat of engine oil to the journals and bearing.
19. Turn the crankshaft throw to the bottom of its stroke and pull the piston all the way down until the connecting rod bearing seats on the crankshaft journal.
20. Install the connecting rod cap and torque the nuts to specifications.
21. After the piston and connecting rod assemblies have been installed, check the connecting rod side

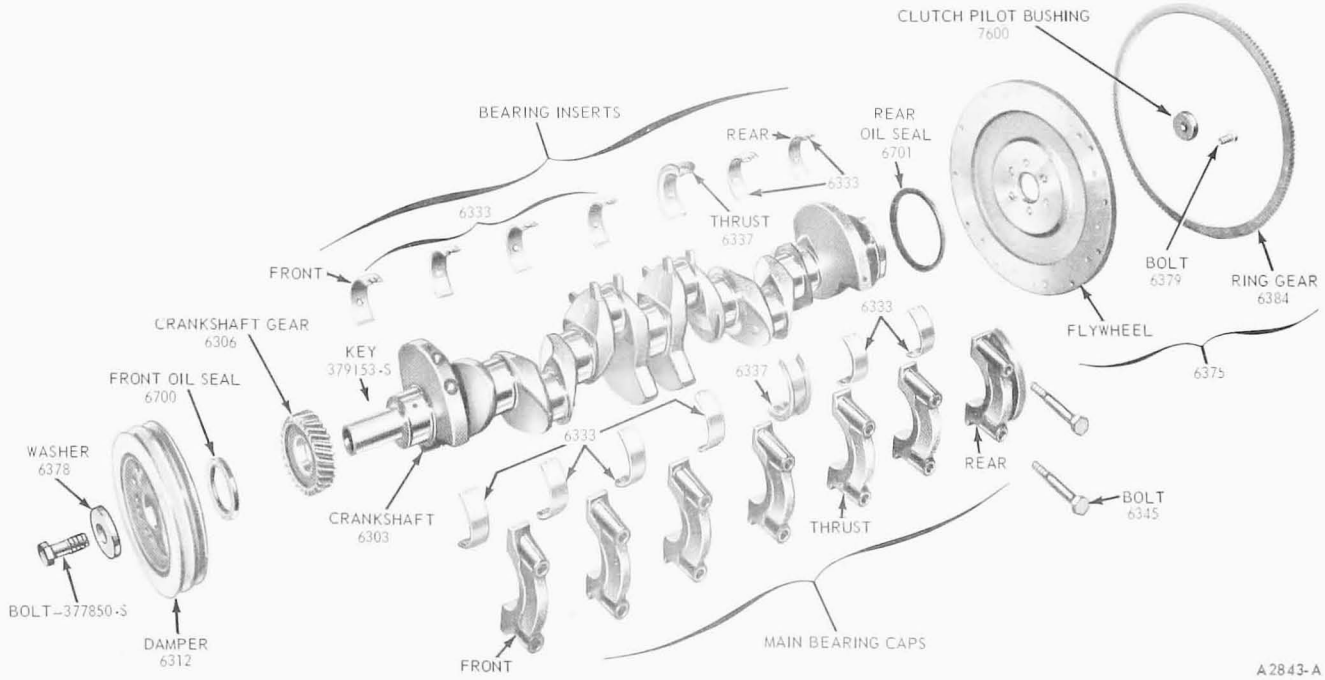

FIG. 44 Crankshaft and Related Parts

clearance on each crankshaft journal (Fig. 43).

22. Clean the oil pan, oil pump and oil pump screen.
23. Install the inlet tube and screen on the oil pump. Prime the oil pump by filling the inlet opening with oil and rotate the pump shaft until oil emerges from the outlet opening. Install it with a new gasket. Torque the attaching bolts to specifications.
24. On a crankshaft for a standard transmission, install the clutch pilot bushing (refer to Clutch Pilot Bushing Replacement).
25. Turn the engine on the work stand so that the rear of the engine is up. Position the engine rear cover plate on the cylinder block. Position the flywheel on the crankshaft. **Coat the threads of the attaching bolts with oil-resistant sealer and install the bolts.** Torque the bolts to specifications.

On a flywheel for a manual-shift transmission, locate the clutch disc following the procedure in Group 16. Install the pressure plate. Torque the attaching bolts to specifications.

26. Turn the engine on the work stand so that the front end is up.
27. Install the crankshaft gear following the procedure under Timing Gear Installation.
28. Install a new crankshaft front oil seal in the cylinder front cover (Fig. 22). Install the cylinder front cover and crankshaft damper by following the procedure outlined under Cylinder Front Cover Installation.
29. Apply oil-resistant sealer in the cavities between the bearing cap and cylinder block (Fig. 36). Install a new seal in the rear main bearing cap and apply a bead of oil-resistant sealer to the tapered ends of the seal. Install new side gaskets on the oil pan with oil-resistant sealer (Fig. 25). Position a new oil pan to cylinder front cover seal on the oil pan and install the oil pan.
30. Install the oil level dipstick.
31. Remove the engine from the work stand and install it in the vehicle.
32. Check the ignition timing and adjust if necessary.

CAMSHAFT BEARING

Camshaft bearings are available pre-finished to size for standard and 0.015-inch undersize journal diameters.

Removal

1. Remove the engine following the procedures in this Section and install it on a work stand (Fig. 38).
2. Remove the camshaft, flywheel and crankshaft, following the appropriate procedures. Push the pistons to the top of the cylinders.
3. Remove the camshaft rear bearing bore plug as detailed in Part 21-01. Remove the camshaft bearings with the tool shown in Fig. 45.
4. Select the proper size expanding collet and back-up nut and assemble on the expanding mandrel. With the expanding collet collapsed, install the collet assembly in the camshaft bearing and tighten the back-up nut on the expanding mandrel until the collet fits the camshaft bearing.
5. Assemble the puller screw and extension (if necessary) as shown and install on the expanding mandrel. Wrap a cloth around the threads of the puller screw to protect the front bearing or journal. Tighten the pulling nut against the thrust bearing and pulling plate to remove the camshaft bearing. Be sure to hold a wrench on the end of the puller screw to prevent it from turning.
6. To remove the front bearing, install the puller screw from the rear of the cylinder block.

Installation

1. Position the new bearings at the bearing bores, and press them in place with the tool shown in Fig. 45. Be sure to center the pulling plate and puller screw to avoid damage to the bearing. **Failure to use the correct expanding collet can cause severe bearing damage.** Align the oil holes in the bearings with the oil holes in the cylinder block before pressing bearings into place. **Be sure the front bearing is installed the specified distance below the front face of the cylinder block.**
2. Install the camshaft rear bearing bore plug as detailed in Part 21-01.
3. Install the camshaft, crankshaft, flywheel and related parts, following the appropriate procedures. Do not check connecting rod and main bearing clearances as a part of Camshaft Bearing Replacement.
4. Install the engine in the vehicle, following the procedures in this Section.

OIL FILTER

DISPOSABLE-TYPE

1. Place a drip pan under the oil filter. Unscrew the filter from the cylinder block with a filter wrench.
2. Coat the gasket on the filter with oil. Place the filter in position on the cylinder block (Fig. 46). Hand-tighten the filter until the gasket contacts the adapter face, then advance it 1/2 turn.
3. Operate the engine at fast idle and check for oil leaks. If oil leaks are evident, perform the necessary repairs to correct the leakage. Check the oil level and fill the crankcase if necessary.

REPLACEABLE ELEMENT-TYPE

The oil filter assembly is shown in Fig. 47.

1. Place a drip pan under the filter. Remove the filter center bolt, then remove the filter assembly and gasket. Discard the gasket.
2. Remove the filter element, neoprene gasket, spring and seat. Then remove the center bolt from the container and the fiber gasket from the bolt. Discard the element and gaskets.
3. Wash all parts in solvent. Make sure the openings in the bolt are clean.
4. Install the new filter element in the housing following the instructions furnished with the new element.
5. Clean the cylinder block filter recess. Install a new gasket.
6. Place the filter assembly in position and thread the center bolt into the adapter finger-tight.
7. Rotate the filter assembly slightly, in each direction, to make sure the gasket is seated evenly.
8. Torque the bolt to specifications. **Do not over-torque the bolt.**
9. Add oil to the crankcase if necessary. Operate the engine at fast idle and check for oil leaks.

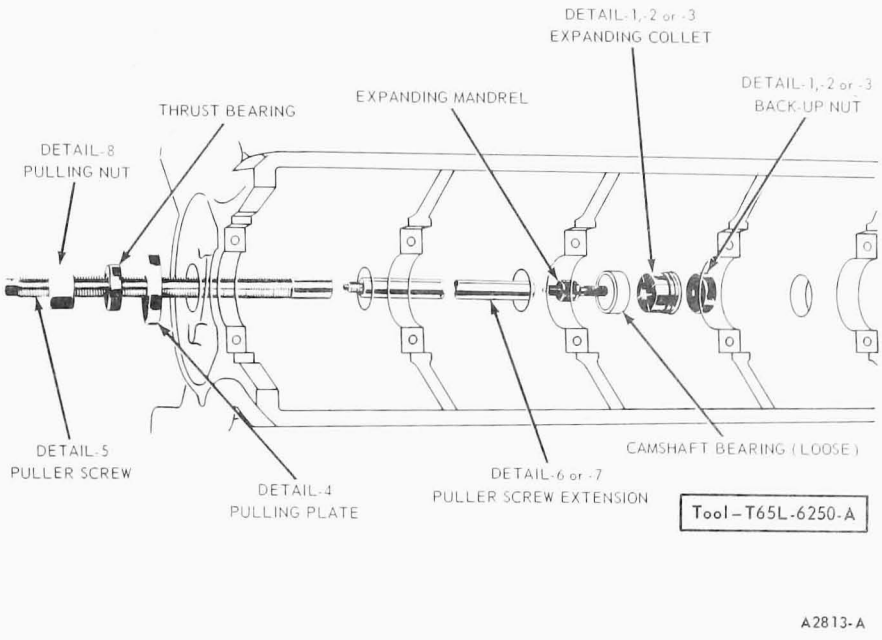

FIG. 45 Replacing Camshaft Bearing

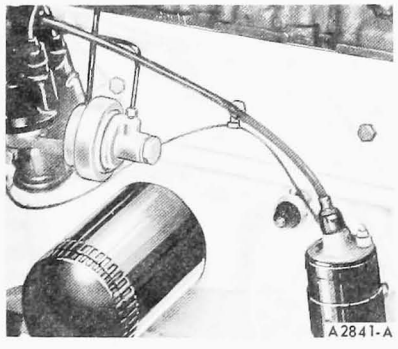

FIG. 46 Oil Filter Installed—Typical

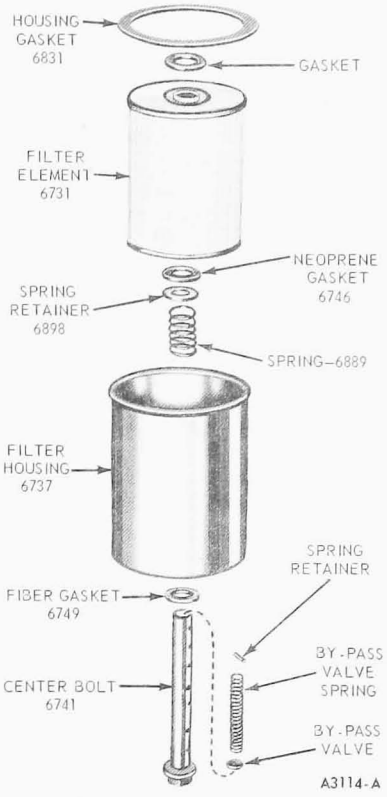

FIG. 47 Typical Replaceable Element Type Oil Filter Assembly

DISASSEMBLY AND ASSEMBLY

When installing nuts or bolts that must be torqued (refer to torque specifications), oil the threads with light weight engine oil. **Do not oil threads that require oil-resistant or water-resistant sealer.**

ENGINE ASSEMBLY

Disassembly

1. Remove the engine left front support insulator from the engine.
2. Install the engine on a work stand (Fig. 38).
3. Disconnect the spark plug wires at the spark plugs. Disconnect the distributor high tension lead at the coil. Remove the distributor cap and spark plug wires as an assembly.
4. Disconnect the fuel line at the carburetor and fuel pump. Disconnect the vacuum line at the distributor and carburetor. Remove the fuel and vacuum lines.
5. Remove the fuel pump and discard the gasket.
6. Remove the oil pressure sending unit and the oil level dipstick.
7. Disconnect the distributor primary wire at the coil, then remove the distributor. Remove the ignition coil and bracket assembly.
8. Remove the oil filter and oil filter mounting adapter. If equipped, remove the air compressor.
9. Remove the crankcase ventilation regulator valve from the valve rocker arm cover. Remove the rocker arm cover.
10. Loosen the rocker arm stud nuts, rotate the rocker arms to one side and remove the push rods in sequence. Place the push rods in a rack so they can be installed in the same location from which they were removed.
11. Remove the valve push rod cover. Remove the valve lifters and place

them in order so they may be installed in the same bores from which they were removed (Fig. 20).
12. Remove the water pump.
13. Remove the carburetor, intake and exhaust manifold and cylinder head as an assembly.
14. Remove the crankshaft damper (Fig. 21). Remove the cylinder front cover. Remove the crankshaft front oil seal from the cylinder front cover.
15. Remove the flywheel and engine rear cover plate.
16. Remove the oil pan and oil pump and pickup tube assembly. Discard the gaskets and seals.
17. Check the camshaft end play, the timing gear backlash and the timing gear runout (Part 21-01). Position the camshaft gear as shown in Fig. 28 and remove the camshaft thrust plate screws. Remove the camshaft, thrust plate and gear as an assembly.
18. Remove the crankshaft gear as shown in Fig. 32.
19. Remove any ridge and/or deposits from the upper end of the cylinder bores. Remove the cylinder ridge with a ridge cutter. Follow the instructions furnished by the tool manufacturer. **Never cut into the ring travel area in excess of 1/32 inch when removing ridges.**
20. **Make sure all bearing caps (main and connecting rod) are marked so that they can be installed in their original locations.** Turn the crankshaft until the connecting rod being removed is down. Remove the connecting rod cap.
21. Push each connecting rod and piston assembly out the top of the cylinder with the handle end of a hammer. **Avoid damage to the crankshaft journal or the cylinder wall when removing the piston and rod.**
22. Remove the bearing inserts from the connecting rods and caps. Install the rod caps on the connecting rods from which they were removed.
23. Remove the main bearing caps. Carefully lift the crankshaft out of the cylinder block so that the thrust bearing surfaces are not damaged. Remove the crankshaft rear oil seal. **Handle the crankshaft with care to avoid possible fracture or damage to the finished surfaces.**
24. Remove the main bearing inserts from the cylinder block and main bearing caps.
25. Remove oil dipstick tube from the cylinder head dowel pins and cylinder block drain plugs.
26. Disassemble the pistons, piston rings and connecting rods, following the procedures under Pistons and Connecting Rods Disassembly.
27. If the camshaft gear is to be removed from the camshaft, press the camshaft out of the gear in an Arbor Press. Remove the thrust plate and spacer.
28. Remove the camshaft rear bearing bore plug as detailed in Part 21-01. Remove the camshaft bearings. Refer to Camshaft Bearing Replacement.
29. Remove the carburetor, EGR valve and spacer from the intake manifold and discard the gaskets. Remove the intake and exhaust manifolds from the cylinder head and separate the manifolds. Disassemble the cylinder head, removing the rocker arms, valves, valve springs, coolant outlet elbow, etc. Place all parts in a rack or identify them so they can be installed in the same location from which they were removed.

Assembly

Many of the procedures given here are condensed from other sections of this Group.

1. Clean and inspect all parts per the appropriate procedures in Part 21-01, except do not disassemble the oil pump and hydraulic lifters for cleaning.
2. Remove the glaze from the cylinder bores by following the procedures in Part 21-01, Refinishing Cylinder Walls.
3. Invert the engine on the work stand. Position new camshaft bearings in the cylinder block, making sure that the oil holes in the bearing are aligned with those in the block. Press them in place (Fig. 45). **Be sure the camshaft front bearing is installed the specified distance below the front face of the cylinder block.**
4. Install a new camshaft rear bearing bore plug as detailed in Part 21-01.
5. Oil the camshaft bearing journals and apply Lubriplate or equivalent to all the lobes. Then carefully slide the camshaft through the bearings.
6. If the camshaft gear was removed, install the spacer, thrust plate and gear, using the tool shown in Fig. 30. Install the thrust plate screws and torque to specifications.
7. If the crankshaft main bearing journals have been refinished to a definite undersize, install the correct undersize bearings. Be sure the bearing inserts and bearing bores are clean.
8. Place the upper main bearing inserts in position in the bore with the tang fitting in the slot provided.
9. Install the lower main bearing inserts in the bearing caps.
10. Carefully lower the crankshaft into place. **Be careful not to damage the bearing surfaces.**
11. Check the clearance of each main bearing following the procedure given in this Section.
12. After the bearings have been fitted, apply a light coat of engine oil to the journals and bearings. Install all the bearing caps, except the thrust bearing cap (No. 5 bearing). **Be sure that the main bearing caps are installed in their original locations. Torque the bearing cap bolts to specifications.**
13. Install the thrust bearing cap and check the crankshaft end play by following steps 11 thru 16 under Crankshaft Installation in this Section.
14. Check the camshaft end play, camshaft gear backlash following the procedures in Part 21-01. If the end play exceeds specifications, replace the thrust plate. If the gear backlash exceeds specifications, replace the camshaft gear (and crankshaft gear as necessary).
15. Check the camshaft gear runout with a dial indicator (Part 21-01). If the gear runout is excessive, replace the gear.
16. Check the piston to cylinder bore fit of each piston following the procedure in Part 21-01.
17. Check the end gap of all piston rings (Part 21-01). Assemble the pistons piston rings and connecting rods, following the procedure under Pistons and Connecting Rods Assembly. Check the piston ring side clearance (Part 21-01).
18. Install the piston and connecting rod assemblies and check the clearance of the connecting rod bearings. Refer to Piston and Connecting Rod Installation and Connecting Rod Bearing Replacement.
19. Coat a new crankshaft front oil seal with grease and install it in the cylinder front cover (Fig. 22).
20. Coat the gasket surfaces of the cylinder front cover and cylinder block with oil-resistant sealer. Position the gasket on the block and install the cover (Fig. 23). Torque the bolts to specifications.
21. Lubricate the damper end of the crankshaft with a white lead and oil mixture. Apply Lubriplate or equivalent to the seal surface of the front oil seal. Apply Lubriplate or equivalent to the seal surface of the crankshaft damper and install the crankshaft damper (Fig. 24).

22. Apply a light film of engine oil on a new crankshaft rear oil seal. Apply Lubriplate or equivalent to the seal contact surface of the crankshaft and install the seal (Fig. 39) the specified distance below the face of the cylinder block. Be sure the seal was not damaged during installation.
23. Position the engine rear cover plate on the rear of the cylinder block and install the flywheel on the crankshaft. **Apply oil-resistant sealer to the threads of the flywheel attaching bolts. Install the bolts and torque them to specifications.**
24. Prime the oil pump by filling the inlet opening with oil and rotate the pump shaft until oil emerges from the outlet opening. Use a new gasket and install the inlet tube and screen on the oil pump. Position a new gasket on the oil pump body and install the oil pump and inlet tube assembly. Torque the attaching bolts to specifications.
25. Apply oil-resistant sealer in the cavities between the bearing cap and cylinder block (Fig. 36). Install a new seal in the rear main bearing cap and apply a bead of oil-resistant sealer to the tapered ends of the seal.
26. Install new side gaskets on the oil pan with oil-resistant sealer (Fig. 25). Position a new cylinder front cover seal on the oil pan and install the oil pan.
27. Coat both sides of a new water pump gasket with water-resistant sealer and position the gasket on the cylinder block. Coat the threads of the water pump bolts with water-resistant sealer. Install the water pump. Torque the bolts to specifications.
28. Assemble the valves, springs, rocker arms, coolant outlet elbow, etc., following the procedures under Cylinder Head.
29. Place a new cylinder head gasket on the block. Carefully position the cylinder head on the block and install the bolts. Torque the bolts in sequence (Fig. 17) to specifications. When cylinder head bolts have been tightened it is not necessary to re-torque the bolts after extended operation. However, the bolts may be checked and re-torqued, if desired.
30. Clean the exterior surface of the valve lifters with a clean, lint-free cloth and oil the surface with engine oil. Install the valve lifters (Fig. 20) in the same sequence that they were removed.
31. Apply Lubriplate or equivalent to both ends of the push rods and to the push rod bores in the cylinder head. Install the push rods in the same sequence that they were removed. Be sure the push rods are properly seated in the valve lifters. Engage the rocker arms with the push rods and tighten the stud nuts sufficiently to hold the push rods in place.
32. Adjust the valve clearance as described in this Part.
33. Coat the gasket surface of the push rod cover with oil-resistant sealer and position a new gasket on the cover. Install the cover and gasket on the cylinder block. Torque the cover bolts in sequence to specifications.
34. Install the carburetor, EGR valve, spacer, intake and exhaust manifold, following the procedure under Intake and Exhaust Manifolds Installation.
35. Clean the valve rocker arm cover. Place the new gaskets in the covers making sure that the tabs of the gasket engage the notches provided in the cover. Install the cover on the cylinder head and torque the cover screws in sequence to specifications. Install the crankcase ventilation regulator valve in the rocker arm cover. Attach the vent hose to the intake manifold inlet tube.
36. Install the cylinder block drain plugs and oil pressure sending unit. Install the oil level dipstick tube and dipstick.
37. Install the oil filter mounting adapter. Coat the seal surface of a new oil filter with grease (or engine oil). Install the oil filter until the seal surface contacts the cylinder block, then tighten the filter an additional 1/2 turn.
38. Install the ignition coil and bracket.
39. Position No. 1 cylinder on TDC after the compression stroke. Set the distributor points to No. 1 cylinder firing position and install the distributor. With the distributor ignition points open position (No. 1 cylinder) install the hold-down clamp and screw. Tighten the screw snug, but not tight.
40. Use a new gasket and install the fuel pump. Torque the bolts to specifications. Install the carburetor fuel inlet line and distributor vacuum line. Install the air compressor, if so equipped.
41. Install the distributor cap and spark plug wires. Connect the spark plug wires. Connect the distributor primary and secondary high tension wires to the ignition coil.
42. Remove the engine from the work stand. Install the engine left front support insulator on the engine.

CYLINDER HEAD

Disassembly

1. Remove the coolant outlet housing and thermostat. Discard the gasket.
2. Remove the intake manifold, exhaust manifold and carburetor as an assembly from the cylinder head. Discard the gasket.
3. Remove the spark plugs.
4. Remove the deposits from the combustion chambers and valve heads with a scraper and a wire brush before removing the valves. **Be careful not to scratch the cylinder head gasket surface.**
5. Compress the valve springs (Fig. 48), then remove the valve spring retainer locks and release the spring.
6. Remove the spring retainer, spring, stem seal and valve (Fig. 49). Discard the valve stem seals. Identify all valve parts.

Assembly

1. Lubricate the valve guides and valve stems with heavy engine oil. Apply Lubriplate or equivalent to the tip of the valve stems.
2. Install each valve in the valve guide from which it was removed or to which it was fitted.
3. Oil and install a new intake valve oil seal (Fig. 49). Do not install the O-ring type seal on the exhaust valves at this time.
4. Install the valve spring over the valve. **Be sure the closed coil end is placed against the cylinder head.**
5. Position the spring retainer on all valve springs. Make sure that a positive rotating retainer is used on all of the exhaust valves (Fig. 49).
6. Compress the spring (Fig. 48). Apply engine oil to the O-ring type seal, then install it on the exhaust valve. Install the retainer locks.

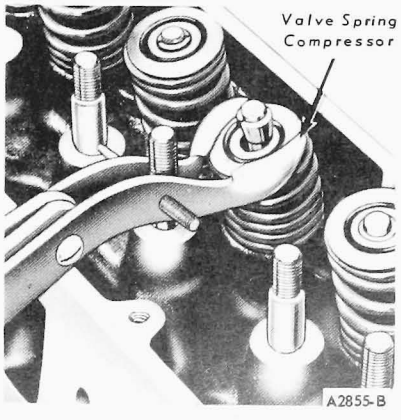

FIG. 48 Compressing Valve Spring on Bench

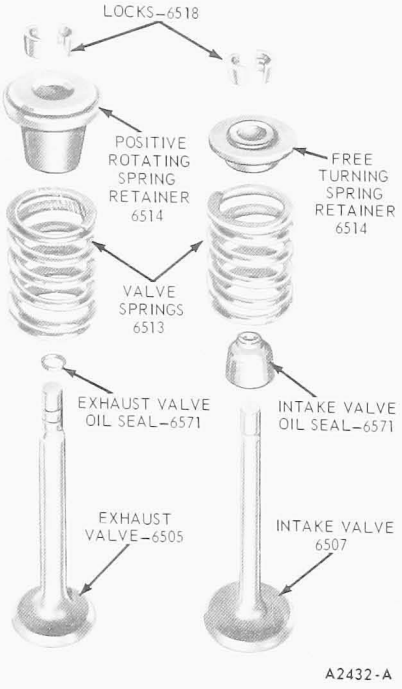

FIG. 49 Valve Assembly

7. Measure the assembled height of the valve spring from the surface of the cylinder head spring pad to the underside of the spring retainer with dividers (Fig. 50).

Check the dividers against a scale. If the assembled height is greater than the specified limit, install the necessary 0.030 inch thick spacer(s) between the cylinder head spring pad and the valve spring to bring the assembled height to the recommended dimension. **Do not install spacers unless necessary. Use of spacers in excess of recommendations will result in overstressing the valve springs and overloading the camshaft lobes which could lead to spring breakage and worn camshaft lobes.**

8. Position a new intake manifold gasket on the cylinder head. Install the intake manifold, exhaust manifold and carburetor as an assembly. Torque the manifold bolts and nuts in sequence (Fig. 16) to specifications.
9. Using a new gasket coated with water-resistant sealer, install the thermostat and coolant outlet elbow. Torque the attaching bolts to specifications.

VALVE LIFTER

The disassembly and assembly procedures for Types I and II valve lifters are different. Valve lifters should always be tested after assembly. Refer to the test procedures covered in Part 21-01.

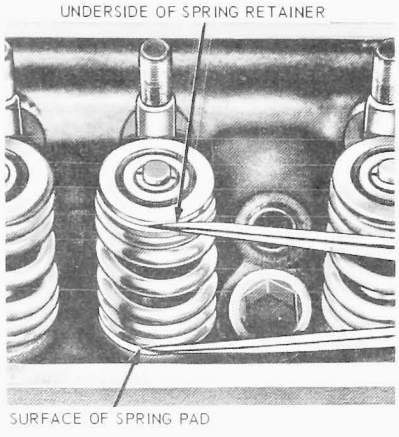

FIG. 50 Checking Valve Spring Assembled Height—Typical

TYPE I

Disassembly

Each valve lifter is a matched assembly. If the parts of one lifter are intermixed with those of another, improper valve operation may result. Disassemble and assemble each lifter separately. Keep the lifter assemblies in proper sequence so that they can be installed in their original bores.

1. Grasp the lock ring with needle nose pliers to release it from the groove. It may be necessary to depress the plunger to fully release the lock ring.
2. Remove the push rod cup, metering valve (disc), plunger and spring.
3. Invert the plunger assembly and remove the check valve retainer by carefully prying up on it with a screwdriver. Remove the check valve (disc or ball check) and spring.

For the cleaning and inspection procedures, refer to Part 21-01.

Assembly

Type I hydraulic valve lifter assembly is shown in Fig. 51.

1. Place the plunger upside down on a clean work bench.
2. Place the check valve (disc or ball check) in position over the oil hole on the bottom of the plunger. Set the check valve spring on top of the check valve (disc or ball check).
3. Position the check valve retainer over the check valve and spring and push the retainer down into place on the plunger.
4. Place the plunger spring and then the plunger (open end up) into the lifter body.
5. Position the metering valve (disc) in the plunger and then place the push rod seat in the plunger.
6. Depress the plunger and position the closed end of the lock ring in the groove of the lifter body. With the plunger still depressed, position the open ends of the lock ring in the groove. Release the plunger and then depress it again to fully seat the lock ring.
7. Use the hydraulic valve lifter leakdown tester (Part 21-01) to fill the lifters with test fluid.

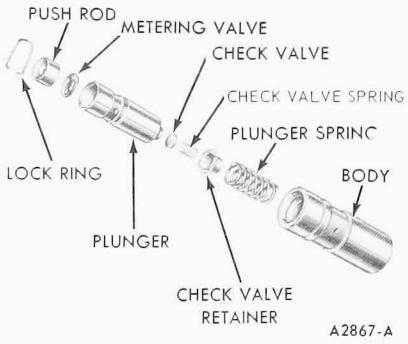

FIG. 51 Type I Hydraulic Valve Lifter Assembly

TYPE II

Disassembly

Each valve lifter is a matched assembly. If parts of one lifter are intermixed with those of another, improper valve operation may result. Disassemble and assemble each lifter separately. Keep the lifter assemblies in proper sequence so they can be installed in their original bores.

1. Grasp the lock ring with needle nose pliers to release it from the groove. It may be necessary to depress the plunger to fully release lock ring.
2. Remove the push rod cup.
3. Remove the plunger assembly, the check valve and the check valve retainer and plunger spring. Carefully remove the plunger spring, the check valve retainer and the check valve ball and spring from the plunger.

Assembly

Type II hydraulic lifter assembly is shown in Fig. 52.

1. Place the plunger on a clean work surface (table or bench) in an inverted position and center the check valve ball and spring on it. Carefully slide the check valve retainer over the ball and spring and down until it bottoms. **Use every precaution not to distort it in any way.** Place the plunger spring over the metering valve.
2. Leaving the assembly in the inverted position, slide the lifter body down over the spring until it slightly compresses the spring.
3. Position the combined assembly right side up on the work surface

(table or bench).
4. Install the push rod cup. Depress the cup and install the lock ring.
5. Use the hydraulic valve lifter leakdown tester (Part 21-01) to fill the lifters with test fluid.

OIL PUMP

Disassembly

1. Remove the cover attaching screws and remove the cover (Fig. 53).
2. Remove the inner rotor and shaft assembly, then remove the outer race.
3. Scrape away the staking marks on the body around the oil pressure relief valve cap. Drill a 1/8-inch hole in the relief valve cap and insert a self-threading sheet metal screw of proper diameter into the cap. Pull the cap out of the chamber. Remove the spring and plunger.

Refer to Part 21-01 for the cleaning and inspection and repair procedures.

Assembly

1. Clean all parts thoroughly. Install the oil pressure relief valve plunger, spring and new cap. Stake the cap into position.
2. Install the outer race (recessed dot facing out on same side as dot on rotor) and the inner rotor and shaft assembly.

The inner rotor and shaft and the outer race are serviced as an assembly. One part should not be replaced without replacing the other.

3. Install the cover and torque the attaching screws to specifications.

PISTON AND CONNECTING ROD

Disassembly

1. Remove the bearing inserts from the connecting rod and cap.
2. Mark the pistons and pins to assure assembly with the same rod and installation in the same cylinder from which they were removed.
3. Remove the piston rings. Using an Arbor Press and the tool shown in Fig. 54, press the piston pin from the piston and connecting rod.

Refer to Part 21-01 for the Cleaning, Inspection and Repair procedures.

Assembly

The piston, connecting rod and related parts are shown in Fig. 55. **Check the fit of a new piston in the cylinder bore before assembling the piston and piston pin to the connecting rod following the procedures in Part 21-01.**

The piston pin bore of a connecting rod and the diameter of the piston pin must be within specifications.

1. Apply a light coat of engine oil to all parts. **Assemble the piston to the connecting rod with the bearing tang side of the connecting rod and the indentation notch in the piston positioned as shown in Fig. 56.**
2. Start the piston pin in the piston and connecting rod. Using an Arbor Press, press the piston pin through the piston and connecting rod until the pin is centered in the connecting rod (Fig. 57).
3. Check the end gap of all piston rings (Part 21-01). It must be within specifications. Follow the instructions contained on the piston ring package and install the piston rings.
4. Check the ring side clearance of the compression rings with a feeler gauge inserted between the ring and its lower land (Part 21-01). The gauge should slide freely around the entire ring circumference without binding. Any wear that occurs will form a step at the inner portion of the lower land. **If the lower lands have steps, the piston should be replaced.**
5. Be sure the bearing inserts and the bearing bore in the connecting rod and cap are clean. Foreign material under the inserts will distort the bearing and cause a failure. Install the bearing inserts in the connecting rod and cap with the tangs fitting in the slots provided.

CYLINDER ASSEMBLY

Disassembly

Follow steps 1 thru 17 under Engine Disassembly in this section. Remove the cylinder head dowels from the cylinder block. Remove the cylinder block drain plugs and remove the cylinder assembly from the work stand.

Clean the gasket and seal surfaces of all parts and assemblies (refer to Part 21-01).

Assembly

Install the replacement cylinder assembly on a work stand. Install the cylinder block drain plugs and cylinder head dowels. Transfer all parts removed from the old cylinder assembly to the

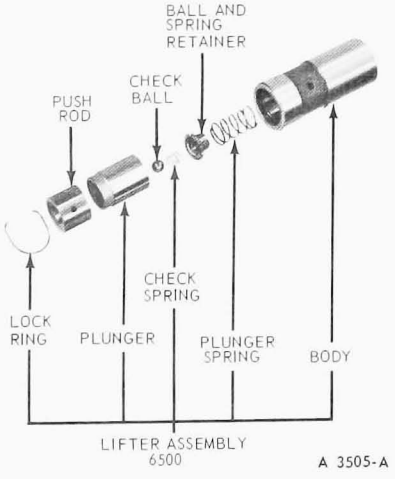

FIG. 52 Type II Hydraulic Valve Lifter Assembly

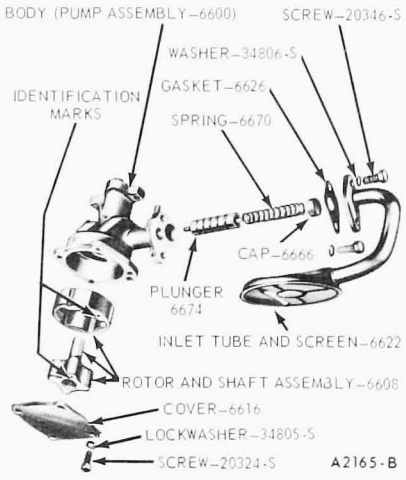

FIG. 53 Oil Pump Assembly

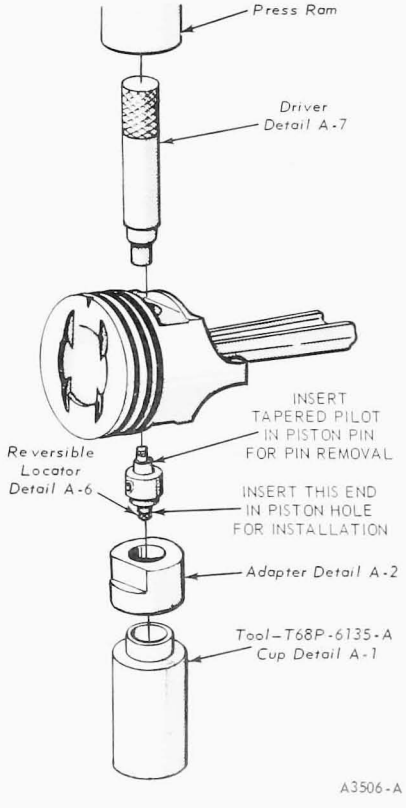

FIG. 54 Removing Piston Pin

new cylinder assembly, following the procedures in steps 19 thru 21, 23 thru 27, 29 thru 33 and 36 thru 44 under Engine Assembly in this section. When transferring parts to the new cylinder assembly, be sure all assembly clearances are within specified limits.

CYLINDER BLOCK

Disassembly

Follow steps 1 thru 27 under Engine Disassembly in this section. Remove the cylinder head dowels and cylinder block drain plugs. Remove the intake and exhaust manifolds and cylinder head as an assembly. Remove the cylinder block from the work stand. Clean the gasket and seal surfaces of all parts and assemblies (Part 21-01).

Assembly

Install the replacement cylinder block on a work stand. Install the cylinder block drain plugs and cylinder head dowels. Transfer all parts removed from the old cylinder block to the new cylinder block, following steps 5 thru 27, 29 thru 33, and 36 thru 44 under Engine Assembly in this section. Install the manifolds and cylinder head as an assembly. **Check all assembly clearances and correct as necessary.**

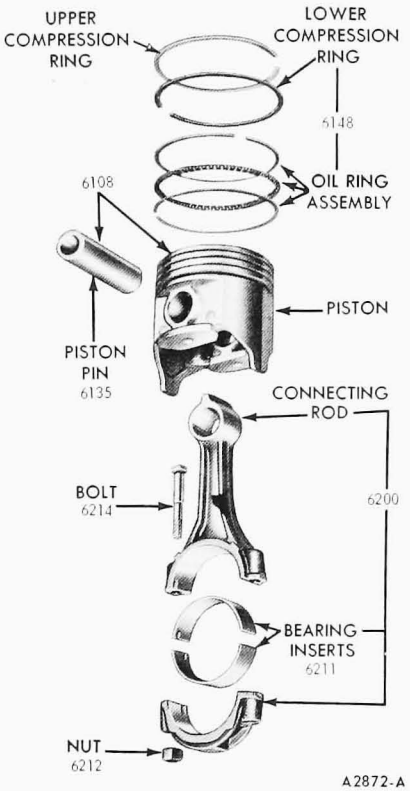

FIG. 55 Piston, Connecting Rod and Related Parts

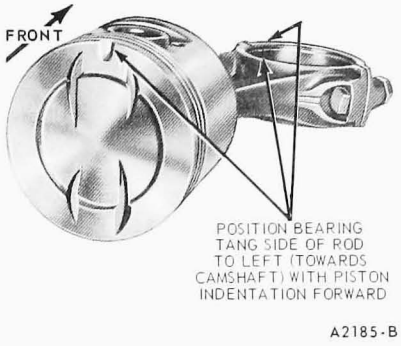

FIG. 56 Oil Hole Position

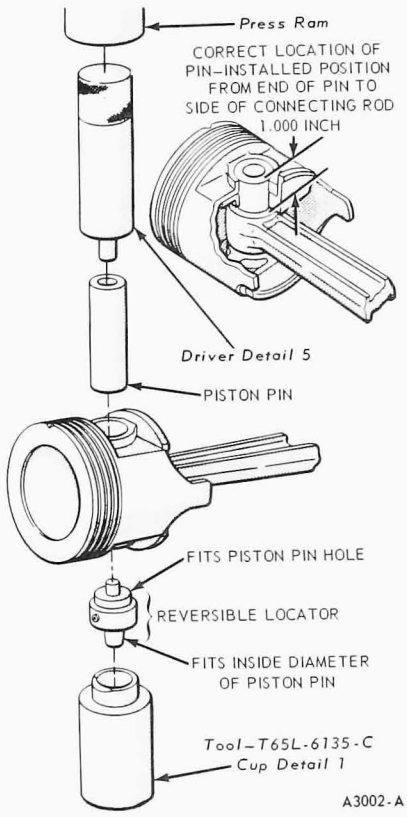

FIG. 57 Installing Piston Pin

SPECIFICATIONS

GENERAL SPECIFICATIONS

Engine (1)	Compression Ratio	Bore and Stroke	Compression Pressure	Oil Pressure 2000 rpm	Firing Order	Belt Tension
240 Six	8.5:1	4.00 x 3.18	When checking compression, take the highest compression reading and compare it to the lowest reading. The lowest reading must be within 75% of the highest.	40–60 psi	1-5-3-6-2-4	New 140 Used 110 All Belts. A used belt is one that has been in operation for 10 minutes.
300 LD & HD Six	8.4:1	4.00 x 3.98				

(1) Engine No. Shown is the Piston Displacement in Cubic Inches.

CYLINDER HEAD

Engine	Combustion Chamber Volume–CC	Valve Guide Bore Dia.–Standard Int. and Exh.	Valve Seat Width	Valve Seat Angle	Valve Seat Runout (Minimum)	Valve Arrangement Front to Rear	Rocker Arm Stud Bore Dia.–Std.	Gasket Surface Flatness (1)
240	73.0–76.0	0.3433–0.3443	Int. 0.060–0.080 Exh. 0.070–0.090	Int. and Exh. 45°	0.0015	E-I-E-I-E-I E-I-E-I-E-I	0.3685–0.3695	0.006 Inch in any 6 inches or an overall of 0.007
300 LD	75.0–78.0							
300 HD	76.0–79.0							

(1) Head gasket surface finish RMS 60-150.

VALVE ROCKER ARMS, ROCKER ARM SHAFT, PUSHRODS AND TAPPETS

Engine	Rocker Arm Lift Ratio	Valve Push Rod (Maximum Runout)	Valve Tappet or Lifter			Collapsed Tappet Gap	
			Standard Diameter	Clearance To Bore (1)	Hydraulic Lifter Leakdown Rate	Allowable	Desired
240,300	1.61:1	0.015	0.8740–0.8745	0.0007–0.0027	5-50 Seconds Max - Measured at 1/16 inch plunger travel	0.074–0.174	0.124

(1) Wear Limit – 0.005

VALVES

Engine	Valve Stem to Valve Guide Clearance		Valve Head Diameter		Valve Face Angle	Valve Face Runout (Maximum)
	Intake	Exhaust	Intake	Exhaust		
240 300 LD 300 HD	0.0010–0.0027 (1)	0.0010–0.0027 (1)	1.772–1.787	1.552–1.567	44°	0.002

(1) Wear Limit 0.0055

VALVES (Continued)

Engine	Valve Stem Diameter							
	Standard		0.003 Oversize		0.015 Oversize		0.030 Oversize	
	Intake	Exhaust	Intake	Exhaust	Intake	Exhaust	Intake	Exhaust
240, 300 LD 300 HD	0.3416–0.3423	0.3416–0.3423	0.3446–0.3453	0.3446–0.3453	0.3566–0.3573	0.3566–0.3573	0.3716–0.3723	0.3716–0.3723

VALVE SPRINGS

Engine	Valve Spring Pressure-Lbs @ Specified Length		Valve Spring Free Length (Approx.)	Valve Spring Assembled Height (Pad to Retainer)	Valve Spring Out of Square (Max.)
	Pressure	Wear Limit			
240 & 300	Intake 76-84 @ 1.700 Intake 187-207 @ 1.300	68 @ 1.700 166 @ 1.300	Intake 1.99	Intake 1-11/16–1-23/32	5/64 (0.078)
	Exhaust 77-85 – 1.580 Exhaust 182-202 @ 1.180	69 @ 1.300 162 @ 1.180	Exhaust 1.87	Exhaust 1-9/16–1-19/32	

CYLINDER BLOCK

Engine	Cylinder Bore Diameter (1)	Tappet Bore Diameter	Main Bearing Bore Diameter	Distributor Shaft Bearing Bore Diameter	Head Gasket Surface Flatness (2)
240,300	4.000–4.0036	0.8752–0.0767	2.5902–2.5910	0.5155–0.5165	0.003 inch in any 6 inches or 0.007 inch overall

(1) Maximum out-of-round 0.001
Wear Limit 0.005
Maximum taper 0.001
Wear Limit 0.010
Cylinder bore surface finish RMS 15–35

(2) Head gasket surface finish RMS
All 60–150

CAMSHAFT

Engine	Lobe Lift ①		Theoretical Valve Lift		Camshaft	Camshaft Journal to Bearing
	Intake	Exhaust	Intake	Exhaust	End Play ③	Clearance ②
240,300	0.2490	0.2490	0.400	0.400	0.001–0.007	0.001–0.003

① Maximum allowable lobe lift loss (All Engines) 0.005 ② Wear Limit 0.006 ③ Wear Limit 0.009

CAMSHAFT (Cont'd.)

Item	Bearing	Engine 240, 300
Camshaft Journal Diameter–Standard ①	(No. 1)	2.0170–2.0180
	(No. 2)	
	(No. 3)	
	(No. 4)	
Camshaft Bearings Inside Diameter	(No. 1)	2.0190–2.0200
	(No. 2)	
	(No. 3)	
	(No. 4)	
	(No. 5)	
Camshaft Bearings Location ②	(No. 1)	0.020–0.035

① Camshaft Journal maximum runout–All engines 0.008
Camshaft Journal maximum out-of-round–All engines 0.005

② Distance in inches that the front edge of the bearing is installed towards the rear from the front face of the cylinder block.

CAMSHAFT DRIVE MECHANISM

Engine	Camshaft Gear To Crankshaft Gear Backlash	Camshaft Gear Assembled Face Runout TIR Max.	Crankshaft Gear Assembled Face Runout TIR Max.
240–300	0.002–0.004	0.006	0.003

CRANKSHAFT AND FLYWHEEL

Engine	Main Bearing Journal Diameter ① ②	Main Bearing Journal Runout-Maximum	Main Bearing Journal Thrust Face Runout	Main Bearing Journal Max. Taper	Thrust Bearing Journal Length	Main and Rod Bearing Journal Finish R M S Max.	Main and Rod Bearing Journal Thrust Face Finish R M S
240, 300 LD	2.3982–2.3990	0.002	0.001	0.0003 Per Inch	1.199–1.201	12	20 Front–20 Rear
300 HD							

① Maximum Out-of-round 0.0004 ② Wear Limit 0.005

CRANKSHAFT AND FLYWHEEL (Continued)

Engine	Connecting Rod Journal Diameter ①	Connecting Rod Bearing Journal Maximum Taper	Crankshaft Free End Play	Crankshaft To Rear Face of Block Runout TIR Max.	Flywheel Clutch Face Runout	Flywheel Ring Gear Lateral Runout	
						Standard Transmission	Automatic Transmission
240	2.1228–2.1236	0.0003 Per Inch	0.004–0.008 ②	0.005	0.010	0.045	0.040
300							

① Maximum out-of-round 0.0004 ② Wear limit 0.012

CRANKSHAFT BEARINGS

Engine	Connecting Rod Bearings			Main Bearings		
	To Crankshaft Clearance		Wall Thickness	To Crankshaft Clearance		Wall Thickness
	Desired	Allowable	–Standard ①	Desired	Allowable	–Standard ①
240	0.0008–0.0015	0.0008–0.0024	0.0754–0.0757	0.0005–0.0015	0.0005–0.0022	0.0954–0.0957
300 LD		0.0009–0.0027		0.0009–0.0015	0.0009–0.0026	0.0952–0.0955
300 HD	0.0009–0.0027				0.0009–0.0028	0.0950–0.0955

① Add 0.0010 to standard thickness for 0.002 undersize

CONNECTING ROD

Engine	Piston Pin Bore or Bushing I.D.	Connecting Rod Bearing Bore Diameter ①	Connecting Rod Length Center to Center	Connecting Rod Alignment Max. Tot. Difference ②		Connecting Rod Assembly (Assembled To Crankshaft)
				Twist	Bend	Side Clearance ③
240	0.9734–0.9742	2.2750–2.2758	6.7932–6.7962	0.012	0.004	0.0060–0.0130
300			6.2082–6.2112			

① Connecting rod bearing bore maximum out-of-round (All Engines) . . . . 0.0006, Taper 0.0004

② Pin bushing and crankshaft bearing bore must be parallel and in the same vertical plane within the specified total difference at ends of 8-inch long bar measured 4 inches on each side of rod.

③ Wear Limit 0.018

PISTON

Engine	Diameter ①			Piston To Cylinder Bore Clearance ②	Piston Pin Bore Diameter	Ring Groove Width			
	Coded Red	Coded Blue	0.003 Oversize			Top	Compression Intermed.	Bottom	Oil
240	3.9984–3.9990	3.9996–4.0002	4.0008–4.0014	0.0014–0.0022	0.9753–0.9756	0.0800–0.0810	—	0.0800–0.0810	0.1880–0.1890
300									

① Measured 90° to pin centerline and at pin centerline height.

② Refer to Part 21-01 in Shop Manual for the proper procedures for measuring piston to bore clearance.

CA1286-B1

PISTON PIN

Engine	Length	Diameter			To Piston Clearance	To Connecting Rod Bushing Clearance
		Standard	0.001 Oversize	0.002 Oversize		
240, 300	3.150–3.170	0.9750–0.9753	0.9760–0.9763	0.9770–0.9773	0.0002–0.0004	Interference Fit

PISTON RINGS

Engine	Ring Width			Side Clearance			Ring Gap		
	Compression Ring		Oil Ring	Compression Ring		Oil Ring	Compression Ring		Oil Ring
	Top	Bottom		Top	Bottom		Top	Bottom	
240	0.077–0.078	0.0770–0.0780	–	0.002–0.004 ①	0.0025–0.004 ①	Snug	0.010–0.020	0.010–0.020	0.015–0.055 ②
300									

① Wear limit 0.002 Max. increase in total clearance. ② Steel rail.

OIL PUMP

Engine	Relief Valve Spring Tension-Lbs @ Specified Length	Drive Shaft To Housing Bearing Clearance	Relief Valve Clearance	Rotor Assembly End Clearance– (Pump Assembled)	Outer Race To Housing (Radial Clearance)
240, 300	20.6–22.6 @ 2.490	0.0015–0.0029	0.0015–0.0029	0.0010–0.0040	0.001–0.013

APPROXIMATE OIL PAN CAPACITIES

Crankcase Capacity (Quarts)	Engine		
	240-300 Six Econoline (F-100/250 4x2)	240,300 Six (F-100/250 4x4, F-300/350 300 F-B-LN-500,P-350/500); F100/250 (4x2)	300 Six HD (F-B-LN-600, C-500/600)
U.S. Measure	4.00 ①	5.00 ①	7
Imperial Measure	3.33 ①	4.25 ①	5.875

① Add one quart extra when changing oil filter.

SEALERS

Item	Ford Part No.
Loctite (thread locking compound)	C3AZ-19554-A

LUBRICANTS

Item	Ford Part No.
Exhaust Control Valve Lubricant	C0AZ-19A501-A B-149-A

TORQUE LIMITS

Note: All values given are in Ft-Lbs unless otherwise stated. Oil treads with lightweight engine oil unless the threads require oil-resistent or water-resistant sealer.

Item	Engines Applicable	Torque
Cylinder Head Bolts Step 1	240, 300	50-55
Cylinder Head Bolts Step 2	240, 300	60-65
Cylinder Head Bolts Step 3 ①	240, 300	70-75
Main Bearing Cap Bolts	240, 300	60-70
Exhaust Manifold to Cylinder Head	All	23-28
Intake to Exhaust Manifold	All	28-33
Oil Pump to Cylinder Block	240, 300	12-15
Oil Pump Cover Plate	240, 300	9-15
Oil Filter Center Bolt	300	20-25
Flywheel to Crankshaft	All	75-85
Damper or Pulley to Crankshaft	240-300	130-150
Water Pump to Cylinder Block or Front Cover	240, 300	15-20
Oil Pick-Up Tube To Oil Pump	All	12-15
Valve Rocker Arm Cover	240, 300	4-7
Cylinder Front Cover	240-300	12-18

Item	Engines Applicable	Torque
Oil Pan To Cylinder Block	240, 300	10-12
Oil Pan Drain Plug	All	15-25
Intake Manifold to Cylinder Head	All	23-28
Exhaust Manifold to Muffler Inlet Pipe	Lt. Trucks	25-35
	Medium & Heavy Duty Trucks	25-30
Valve Rocker Arm Stud Adjusting Nut Removal Torque (Break-away) counterclockwise	240, 300	4.5-15
Oil Filter Adapter to Cylinder Block	240, 300 HD	38-42
Valve Push Rod Chamber Cover (in-lb)	240, 300	15-20
Fuel Pump to Cylinder Block Or Cylinder Front Cover	240, 300	12-15
Connecting Rod Nuts	240, 300	40-45
Camshaft Thrust Plate to Block	240, 300	18-21

① Repeat after normal engine operating temperatures are reached.

ECONOLINE ENGINE SUPPORT TORQUE LIMITS

Item	Econoline 240
ENGINE FRONT SUPPORTS	
Front Crossmember to Side Rail	35–50
Engine Mount Bracket Reinforcement to Bracket and Crossmember	35–50
Crossmember Reinforcement to Crossmember and Side Rail	35–50
Engine Front Crossmember to Body	35–50

Item	Econoline 240
ENGINE FRONT SUPPORTS (Cont'd.)	
Engine Front Insulator Stud to Frame Bracket	40–60
Engine Front Insulator to Engine Block	45–55
ENGINE REAR SUPPORTS	
Engine Rear Crossmember to Body	20–30

CA1286-82

TORQUE LIMITS FOR VARIOUS SIZE BOLTS–FT-LBS

Caution: If any of the torque limits listed in this table disagree with any of those listed in the preceding tables, the limits listed in the preceding tables prevail.

Size (Inches)	1/4–20	5/16–18	3/8–16	7/16–14	1/2–13	9/16–18
Torque (Ft-Lbs)	6–9	12–18	22–32	40–55	55–80	85–120

CA1286-B3

PART 21-21 302 CID V-8 Engine

COMPONENT INDEX	Page
CAMSHAFT	
Removal and Installation	21-16
CAMSHAFT BEARING	
Removal and Installation	21-24
CAMSHAFT REAR BEARING BORE PLUG	
Removal and Installation	21-17
CLUTCH PILOT BUSHING	
Removal and Installation	21-17
CONNECTING ROD BEARING	
Removal and Installation	21-21
CRANKCASE VENTILATION SYSTEM	
Description	21-02
Removal and Installation	21-07
CRANKSHAFT	
Removal and Installation	21-22
CRANKSHAFT REAR OIL SEAL	
Removal and Installation	21-19
CYLINDER ASSEMBLY	
Disassembly and Assembly	21-30
CYLINDER BLOCK	
Disassembly and Assembly	21-30
CYLINDER FRONT COVER AND TIMING CHAIN	
Removal and Installation	21-14
CYLINDER HEADS	
Disassembly and Assembly	21-27
Removal and Installation	21-12
ENGINE	
Description	21-02
Disassembly and Assembly	21-25
Removal and Installation	21-03
ENGINE FRONT SUPPORTS	
Removal and Installation	21-05
ENGINE REAR SUPPORT	
Removal and Installation	21-06

COMPONENT INDEX	Page
EXHAUST EMISSION CONTROL SYSTEM	
Description	21-02
EXHAUST MANIFOLDS	
Removal and Installation	21-11
FLYWHEEL	
Removal and Installation	21-17
FRONT OIL SEAL	
Removal and Installation	21-16
INTAKE MANIFOLD	
Removal and Installation	21-10
MAIN BEARING	
Removal and Installation	21-20
OIL FILTER	
Removal and Installation	21-24
OIL PAN	
Removal and Installation	21-18
OIL PUMP	
Disassembly and Assembly	21-29
Removal and Installation	21-19
PISTONS AND CONNECTING RODS	
Disassembly and Assembly	21-29
Removal and Installation	21-21
SPECIFICATIONS	21-31
VALVE CLEARANCE ADJUSTMENT	21-02
VALVE LIFTER	
Disassembly and Assembly	21-28
Removal and Installation	21-13
VALVE ROCKER ARM COVER AND ROCKER ARM	
Removal and Installation	21-08
VALVE SPRING, RETAINER AND STEM SEAL	
Removal and Installation	21-12
WATER PUMP	
Removal and Installation	21-14

DESCRIPTION

ENGINE

The 302 V-8 engine is shown in Fig. 1 and is available in the Bronco, Econoline and F-100. This 8-cylinder engine has a piston displacement of 302 cubic inches and a compression ratio of 8.2:1.

An engine identification tag is located behind or under the ignition coil bracket. Refer to Part 21-01 for the engine tag code.

EXHAUST EMISSION CONTROL SYSTEM

The Imco exhaust emission control system along with the EGR System (Exhaust Gas Recirculation) controls engine combustion at a level designed to reduce contaminants normally emitted through the exhaust system. This is accomplished by using a specially-calibrated carburetor and distributor. The EGR System is covered in Volume VI of this manual.

CRANKCASE VENTILATION SYSTEM

The engine is equipped with a positive closed-type crankcase ventilation system directing the crankcase vapors to the intake manifold.

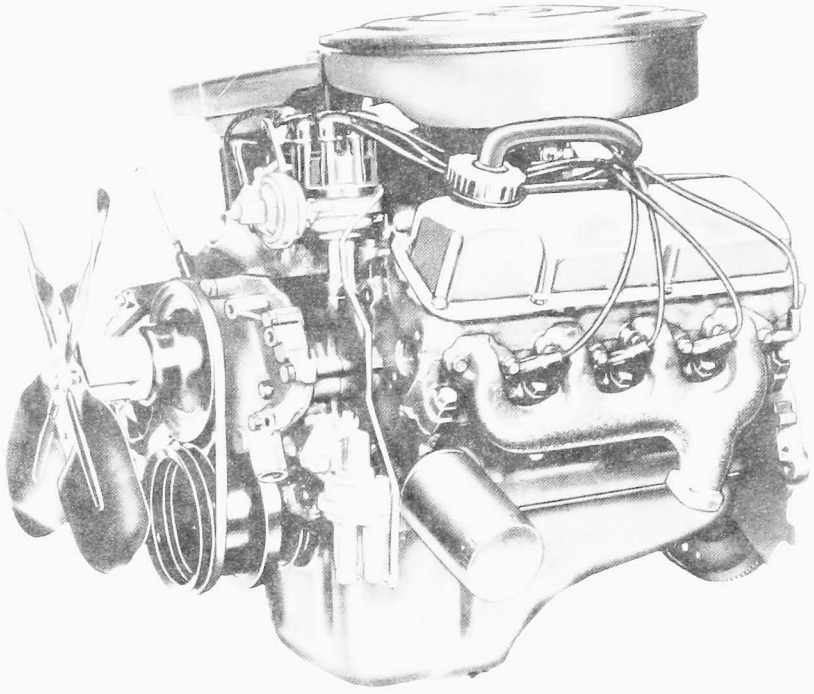

A2715-D

FIG. 1 Left 3/4 Front View of Engine—Typical

ADJUSTMENTS

VALVE CLEARANCE

The valve arrangement of the left bank is E-I-E-I-E-I-E-I and on the right bank is I-E-I-E-I-E-I-E.

A 0.060 inch shorter push rod or a 0.060 inch longer push rod are available for service to provide a means of compensating for dimensional changes in the valve mechanism. Refer to the Master Parts List or the specifications for the pertinent color code.

Valve stem to valve rocker arm clearance should be within specifications with the hydraulic lifter completely collapsed. Repeated valve reconditioning operations (valve and/or valve seat refacing) will decrease the clearance to the point that if it is not compensated for, the hydraulic valve lifter will cease to function and the valve will be held open.

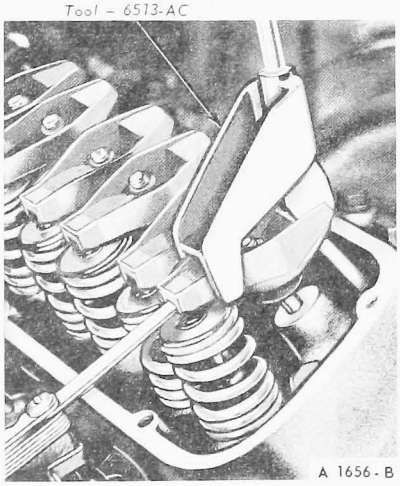

FIG. 2 Checking Valve Clearance—Hydraulic Valve Lifters

To determine whether a shorter or a longer push rod is necessary, make the following check:

1. Install an auxiliary starter switch. Crank the engine with the ignition switch OFF until the No. 1 piston is on TDC after the compression stroke.
2. With the crankshaft in the positions designated in Steps 3, 4 and 5, position the hydraulic lifter compressor tool on the rocker arm. Slowly apply pressure to bleed down the hydraulic lifter until the plunger is completely bottomed (Fig. 2). Hold the lifter in this position and check the available clearance between the rocker arm and the valve stem tip with a feeler gauge. The feeler gauge width must not exceed 3/8 inch.

If the clearance is less than

With No. 1 at TDC at end of compression stroke make a chalk mark at points 2 and 3 approximately 90 degrees apart.

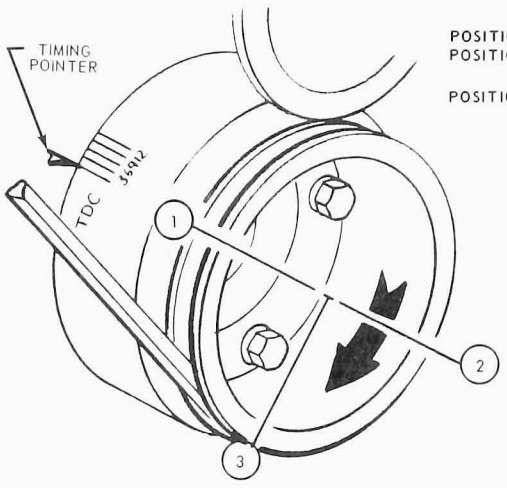

POSITION 1 – No. 1 at TDC at end of compression stroke.
POSITION 2 – Rotate the crankshaft 180 degrees (one half revolution) clockwise from POSITION A.
POSITION 3 – Rotate the crankshaft 270 degrees (three quarter revolution) clockwise from POSITION 2.

A3234-B

FIG. 3 Position of Crankshaft for Checking and Adjusting Valve Clearance

specifications, install an undersize push rod.

If the clearance is greater than specifications, install an oversize push rod.

3. With the No. 1 piston on TDC at the end of the compression stroke, POSITION A in Fig. 3, check the following valves:
   No. 1 Intake No. 1 Exhaust
   No. 7 Intake No. 5 Exhaust
   No. 8 Intake No. 4 Exhaust
4. Rotate the crankshaft to POSITION B in Fig. 3 and check the following valves:
   No. 5 Intake No. 2 Exhaust
   No. 4 Intake No. 6 Exhaust
5. Rotate the crankshaft to POSITION C in Fig. 3 and check the following valves:
   No. 2 Intake No. 7 Exhaust
   No. 3 Intake No. 3 Exhaust
   No. 6 Intake No. 8 Exhaust

The positive stop rocker arm stud eliminates the necessity of adjusting the valve clearance. However, to obtain the specified valve clearance, it is important that all valve components be in a serviceable condition and installed and torqued properly. **Each stud nut should be removed and inspected for conditions shown in Fig. 4 when adjusting valve clearance.**

With the crankshaft in the positions designated in Steps 1, 2 and 3, **remove and inspect the stud nut for conditions shown in Fig. 4. Install and turn the stud nut clockwise until it contacts the stop. Tighten the nut to specifications.**

6. With the No. 1 piston on TDC at the end of the compression stroke, POSITION A in Fig. 3, set the valve clearance on the following valves:
   No. 1 Intake No. 1 Exhaust
   No. 7 Intake No. 5 Exhaust
   No. 8 Intake No. 4 Exhaust
7. Rotate the crankshaft to POSITION B in Fig. 3 and set the valve clearance on the following valves:
   No. 5 Intake No. 2 Exhaust
   No. 4 Intake No. 6 Exhaust
8. Rotate the crankshaft to POSITION C in Fig. 3 and set the valve clearance on the following valves:
   No. 2 Intake No. 7 Exhaust
   No. 3 Intake No. 3 Exhaust
   No. 6 Intake No. 8 Exhaust

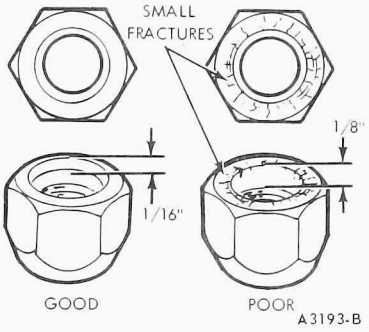

FIG. 4 Inspection of Rocker Arm Stud Nut

REMOVAL AND INSTALLATION

Most of the procedures in this section will require the removal of the engine cover on Econoline vehicles.

When installing nuts or bolts that must be tightened (Refer to torque specifications), oil the threads with light weight engine oil. **Do not oil threads that require oil-resistant or water-resistant sealer.**

Refer to Part 21-01 for Cleaning, Inspection and Test procedures.

ENGINE ASSEMBLY

The engine removal and installation procedures are for the engine only without the transmission attached.

F-100 AND BRONCO

Removal

1. Drain the cooling system and the crankcase.
2. Disconnect the battery and alternator ground cables from the cylinder block.
3. Remove the air cleaner and intake duct assembly, including the crankcase ventilation hose.
4. Disconnect the radiator lower and upper hose at the radiator. If equipped with an automatic transmission, disconnect the transmission oil cooler lines.
5. Remove the fan shroud and position

it over the fan. Remove the radiator. Remove the fan shroud, fan spacer, belts and pulley.

6. Disconnect the wires at the alternator adjusting bolts and allow the alternator to swing down and out of the way.
7. Disconnect the oil pressure sending unit wire from the sending unit, and the flexible fuel line at the fuel tank line. Plug the fuel tank line. Disconnect the windshield wiper vacuum line at the fuel pump.
8. Disconnect the accelerator rod from the carburetor.

Disconnect the transmission shift rod and remove the retracting spring if so equipped.

9. Disconnect the heater hoses from the water pump and intake manifold. Disconnect the water temperature sending unit wire from the sending unit.
10. Remove the flywheel housing-to-engine upper bolts.
11. Disconnect the primary wire from the ignition coil. Remove the wire harness from the left rocker arm cover and position the wires out of the way. Disconnect the ground strap from the cylinder block.
12. Raise the front of the vehicle. Disconnect the starter cable from the starter. Remove the starter.
13. Disconnect the muffler inlet pipes from the exhaust manifolds. Disconnect the engine support insulators from the brackets on the frame underbody.

On a vehicle with automatic transmission, remove the converter inspection plate. Remove the torque converter-to-flywheel attaching bolts.

Remove the remaining flywheel housing-to-engine bolts.

14. Lower the vehicle, and then support the transmission. Install the engine left lifting bracket on the front of the left cylinder head, and install the engine right lifting bracket at the rear of the right cylinder head. Then attach the engine lifting sling (Fig. 5).
15. Raise the engine slightly and carefully pull it from the transmission. Carefully lift the engine out of the engine compartment so that the rear cover plate is not bent or other components damaged. Install the engine on a workstand.

Installation

1. Attach the engine lifting brackets and sling (Fig. 5). Remove the engine from the workstand.
2. Lower the engine carefully into the engine compartment. Make sure the dowels in the block are through the rear cover plate, then engage the holes in the flywheel housing.

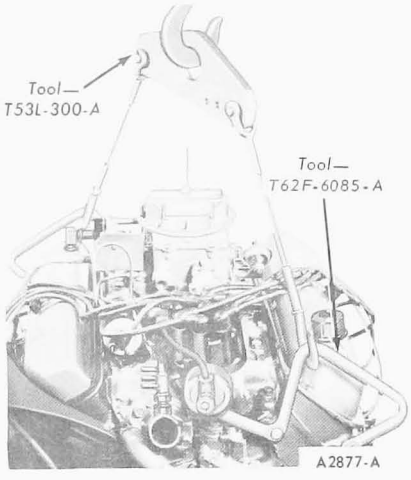

FIG. 5 Typical Engine Lifting Brackets and Sling

On a vehicle with manual transmission, start the transmission main drive shaft into the clutch disc. It may be necessary to adjust the position of the transmission in relation to the engine if the input shaft will not enter the clutch disc. **If the engine hangs up after the shaft enters, turn the crankshaft slowly (transmission in gear) until the shaft splines mesh with the clutch disc splines.**

3. Install the flywheel housing upper bolts.
4. Install the engine support insulator-to-bracket attaching nuts. Disconnect the engine lifting sling and remove the lifting brackets.
5. Raise the front of the vehicle. Connect both exhaust manifolds to the muffler inlet pipes. Tighten the nuts to specifications.
6. Position and install the starter and the starter cable.

Install the remaining flywheel housing-to-engine bolts.

On a vehicle with automatic transmission, install the converter-to-flywheel attaching bolts. Install the converter inspection plate.

7. Remove the support from the transmission and lower the vehicle.
8. Connect the wiring harness to the left valve rocker arm cover and connect the coil wire.
9. Connect the water temperature sending unit wire.
10. Connect the bellcrank to the intake manifold. Connect the transmission shift rod and install the retracting spring. Connect the accelerator rod.
11. Remove the plug from the fuel tank line and connect the fuel line and the oil pressure sending unit wire.
12. Install the pulley, belt, spacer and fan. Position the fan shroud over the fan.
13. Position the alternator and install the alternator bolts. Connect the alternator and the battery ground cables. Adjust the belt tension to specifications.
14. Install the radiator. Connect the radiator upper and lower hoses. Connect the transmission oil cooler lines if so equipped. Install the fan shroud.
15. Connect the heater hose at the water pump. Fill and bleed the cooling system. Fill the crankcase with the proper grade and quantity of oil.
16. Operate the engine at fast idle and check all gaskets and hose connections for leaks.
17. Install the air cleaner and intake duct assembly including the crankcase ventilation hose.

ECONOLINE

Removal

1. Remove engine cover.
2. Remove right front seat bolts and nuts and position the seat out of the way.
3. Drain the cooling system.
4. Remove air cleaner and intake duct assembly, including the crankcase ventilation hose.
5. Disconnect battery and alternator ground cables at the cylinder block.
6. Remove oil filler tube at dash panel and disconnect at the rocker arm cover.
7. Disconnect the radiator upper and lower hoses at the radiator and automatic transmission cooler lines (if so equipped).
8. Disconnect radiator attaching bolts and remove radiator.
9. Disconnect heater hoses at engine and position out of way.
10. Remove fan, spacer, pulley and drive belt.
11. Disconnect accelerator linkage at accelerator shaft on left cylinder head. Disconnect automatic transmission kickdown rod at the carburetor and vacuum line at the intake manifold (if so equipped).
12. Disconnect engine wire harness from left rocker arm cover and position out of way.
13. Remove upper nut attaching right exhaust manifolds to muffler inlet pipe.
14. Raise vehicle on hoist.
15. Drain crankcase and remove oil filter.

16. Disconnect fuel line, tank to pump, at the fuel pump.
17. Disconnect oil dipstick tube bracket from exhaust manifold and oil pan.
18. On manual-shift transmissions, remove bolts attaching equalizer arm bracket to cylinder block and clutch housing (this includes clutch linkage disconnection and retracting spring). Remove bracket.
19. Disconnect starter cable at starter and remove starter.
20. On a vehicle with manual-shift transmission, disconnect drive shaft at rear axle and remove drive shaft. Install plug in transmission end.

On vehicle with automatic transmission, disconnect drive shaft at companion flange.

21. Disconnect speedometer cable and transmission linkage at transmission.
22. Position a transmission jack under transmission. Raise transmission and remove bolts attaching crossmember to chassis. Lower transmission slightly and remove bolt and nut attaching engine rear support to crossmember. Remove crossmember.
23. On a vehicle with manual-shift transmission, remove bolts attaching transmission to clutch housing. Remove transmission.
24. On a vehicle with automatic transmission, remove lower front cover from converter housing. Remove transmission dipstick tube and drain transmission. Install plastic plug in transmission oil pan.

Remove nuts attaching transmission converter to flywheel. Disconnect oil cooler lines and vacuum lines at transmission. Remove remaining bolts fastening transmission to engine. Remove transmission.

25. Position engine support bar tool (T65E-6000-J) to engine and chassis.
26. Disconnect muffler inlet pipes at exhaust manifolds.
27. Remove engine front support attaching nuts and washers.
28. Remove bellcrank bolt from side of cylinder block and position bellcrank assembly to the side.
29. Lower the vehicle.
30. Remove bolts fastening alternator and adjusting arm to the cylinder block and water pump and position out of the way.
31. Remove carburetor air horn stud. Disconnect fuel line, pump to carburetor, at fuel pump.
32. Install engine lifting hooks and chain and remove through side door.
33. On manual-shift transmission, remove bolts fastening adapter plate to clutch housing. remove clutch housing from cylinder block.

Installation

1. On manual-shift transmission, position clutch housing to cylinder block and install attaching bolts. Install adapter plate to clutch housing.
2. Connect fuel line, pump to carburetor, at fuel pump.
3. Position alternator and adjusting arm to cylinder block and water pump. Install and tighten bolts to specification.
4. Lift engine and position to chassis and supporting tool.
5. Raise vehicle on hoist.
6. Install engine front support attaching nuts and washers. Tighten to specifications.
7. On a vehicle with automatic transmission, position bellcrank assembly to cylinder block and install attaching bolt. Tighten to specifications.

Position transmission to engine and install attaching bolts. Tighten to specification.

8. On a vehicle with manual-shift transmission, position transmission to clutch housing and install the attaching bolt. Tighten to specifications.
9. Remove engine support bar (Tool T65E-6000-J).
10. Position engine rear support crossmember to chassis and install attaching bolts. Position transmission with engine rear support attached to crossmember. Install bolt and nut. Tighten all bolts and nuts to specifications. Remove the jack.
11. On a vehicle with automatic transmission, install and tighten converter-to-flywheel attaching nuts. Connect oil cooler and vacuum lines at transmission. Install transmission dipstick tube in pan. Install dipstick tube and vacuum line retaining bracket bolt to cylinder block.
12. Connect transmission shift linkages and speedometer cable.
13. On a vehicle with automatic transmission, connect drive shaft to transmission companion flange.

On a vehicle with manual-shift transmission, remove plug from transmission and install drive shaft yoke into transmission. Connect rear end of drive shaft at rear axle.

14. Install starter and connect cable to starter.
15. Install the muffler inlet pipe attaching bolts and nuts (except upper nut on right exhaust manifold).
16. On a manual-shift transmission, install the bolts connecting equalizer arm bracket to cylinder block and clutch housing (this includes clutch linkage connection and retracting spring).
17. Install the oil filter.
18. Install oil dipstick tube bracket to oil pan and exhaust manifold.
19. Connect fuel line, tank to pump, at pump.
20. Lower the vehicle.
21. Install the upper nut attaching right exhaust manifold to muffler inlet pipe.
22. Connect engine wire harness at left rocker arm cover. Connect battery and alternator ground cables at cylinder block.
23. Connect automatic transmission vacuum line at intake manifold and transmission kickdown rod at carburetor (if so equipped). Connect accelerator linkage to accelerator shaft on left cylinder head.
24. Install drive belt, pulley, spacer and fan, then tighten belt to specification.
25. Connect heater hoses at engine.
26. Position radiator and install attaching bolts. Connect radiator upper and lower hoses and automatic transmission cooler lines (if so equipped).
27. Install oil filler tube by connecting to left rocker arm cover and dash panel.
28. Install air cleaner and intake duct assembly, including the crankcase ventilation hose.
29. Fill and bleed cooling system.
30. Fill crankcase and automatic transmission (if so equipped).
31. Install engine cover and right front seat.
32. Operate the engine at fast idle and check all hose and gasket connections for leaks.

ENGINE FRONT SUPPORTS

The front supports are located on each side of the cylinder block (Figs. 6 and 7). The procedures given apply to either a right or left installation.

F-100

Removal

1. Remove the bolts attaching the fan shroud to the radiator and position the shroud over the fan.
2. Remove the nut and washer attaching the support insulator to the chassis bracket.
3. Raise the engine.

4. Remove the bolts and lock washers attaching the support insulator to the cylinder block and remove the insulator.

Installation

1. Position the support insulator to the cylinder block and install the attaching bolts and lock washers loosely.
2. Carefully lower the engine, guiding the support insulator stud into the support bracket. Tighten the insulator-to-engine bolts to specifications.
3. Install the insulator-to-chassis bracket nut and washer. Tighten the nut to specifications.
4. Install the fan shroud attaching bolts.

BRONCO AND ECONOLINE

Removal

1. Raise the vehicle on a hoist.
2. Remove one nut attaching the engine support insulator to the support bracket.
3. Position transmission jack beneath the front of the oil pan. Raise the engine only enough to clear the support insulator bolt at the support bracket.
4. Remove the bolts holding the support insulator to the block, and remove the support insulator.

Installation

1. Position the support insulator on the block and install the attaching bolts. Tighten the bolts to specification.
2. Carefully lower the engine, guiding the support insulator bolt into the support bracket.
3. Install the nut attaching the engine support insulator to the support bracket. Tighten the nut to specifications.
4. Lower the vehicle.

ENGINE REAR SUPPORTS

The procedures given apply to either a right or left support Bronco only and F-100 and Econoline center mount (Figs. 8 and 9).

F-100

Removal

1. Remove the support insulator-to-crossmember attaching bolt and lock nut.
2. Remove the support insulator-to-transmission extension housing bolts and lock washers.
3. Raise the transmission with a floor jack. Remove the support insulator and retainer.

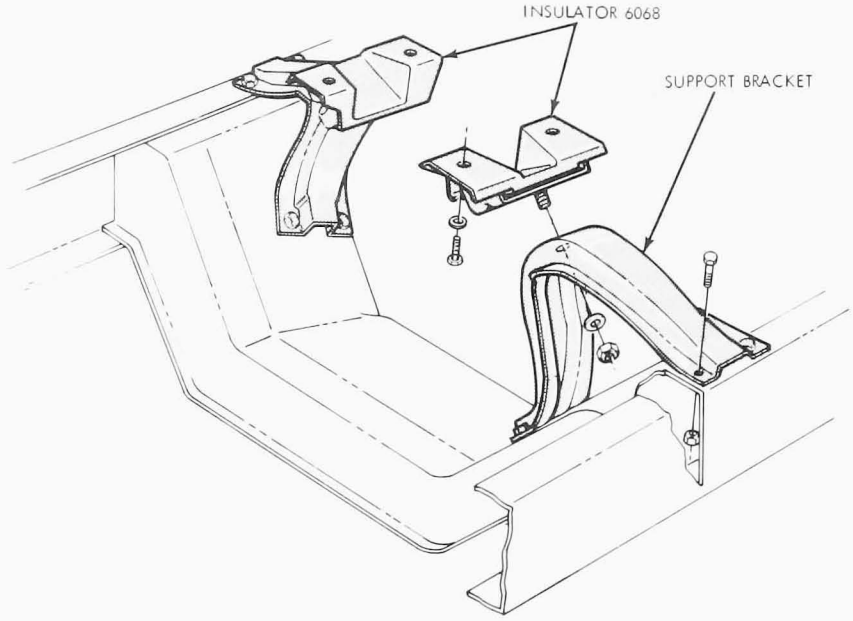

FIG. 6 Engine Front Supports—F-100

Installation

1. Position the support insulator and retainer on the transmission extension housing.
2. Install the support insulator-to-transmission extension housing bolts and lock washers. Torque the bolts to specifications. Lower the transmission.
3. Install the support insulator-to-crossmember attaching bolt and lock nut. Tighten the nut to specifications.

Check to see that the retainer does not contact the portion of the insulator which is attached to the crossmember.

BRONCO

Removal

1. Raise the vehicle on a hoist.
2. Remove the skid plate, if so equipped. Remove the cotter pins, the attaching nuts and the attaching bolts of both support insulators, even though only one is to be replaced. Remove the washers, the retaining plates and the lower support insulators.
3. Position a transmission jack beneath the transmission. Raise the transmission, remove the spacer and the upper support insulator of the assembly to be replaced.

Installation

1. Position the upper support insulator and the spacer on the assembly to be replaced and lower the transmission.
2. Position the lower support insulators, retaining plates and washers, then install the attaching bolts and nuts. Tighten the nuts to specifications and install the cotter keys.
3. Install the skid plate, if so equipped.
4. Lower the vehicle.

ECONOLINE

Removal

1. Raise the vehicle on a hoist.
2. Remove the insulator support bolt and nut securing the rear insulator support to the frame.
3. Raise the transmission with a jack so that the insulator support clears the frame.
4. Remove the insulator support bolt and nut securing the rear insulator support to the transmission, then remove the insulator and retainer.

Installation

1. Position the insulator support and retainer, then install the bolts securing the insulator support to the transmission. Tighten the bolts to specifications.
2. Lower the jack supporting the transmission and align the insulator support bolt hole with the hole in the frame assembly.
3. Install the bolt and nut securing the insulator support to the frame. Tighten to specification.
4. Lower the vehicle.

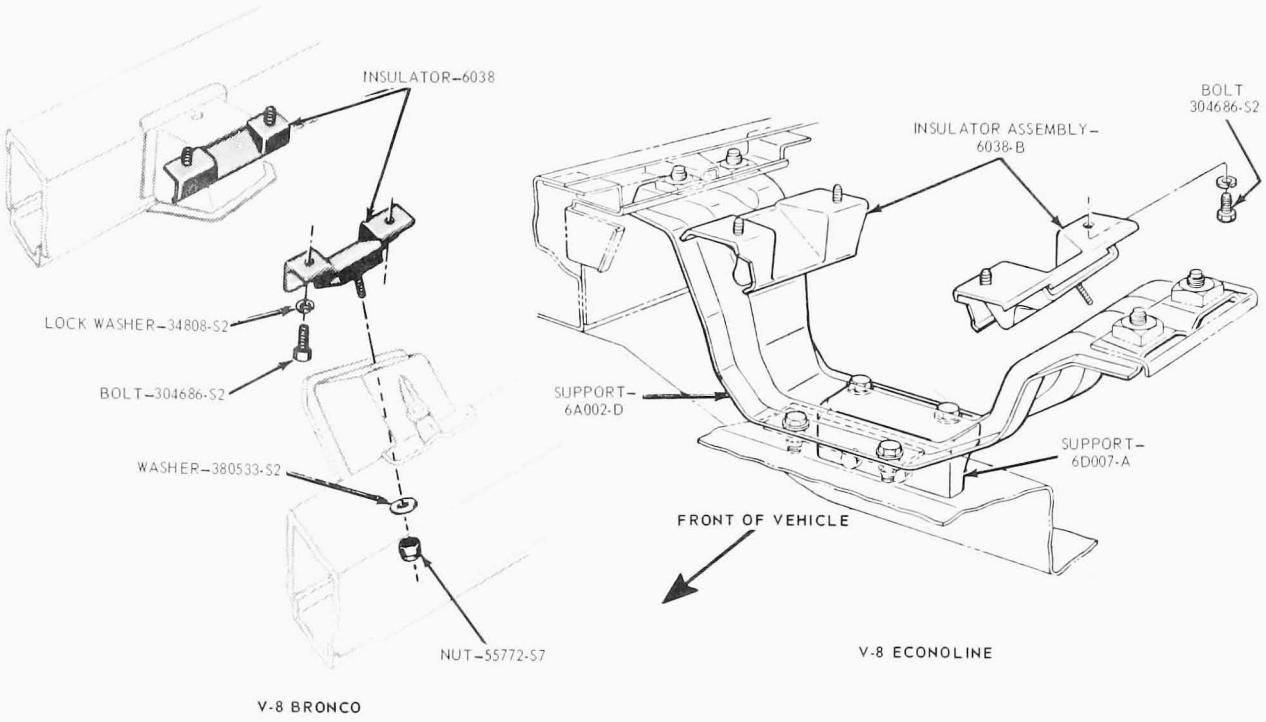

FIG. 7 Engine Front Supports—Bronco and Econoline

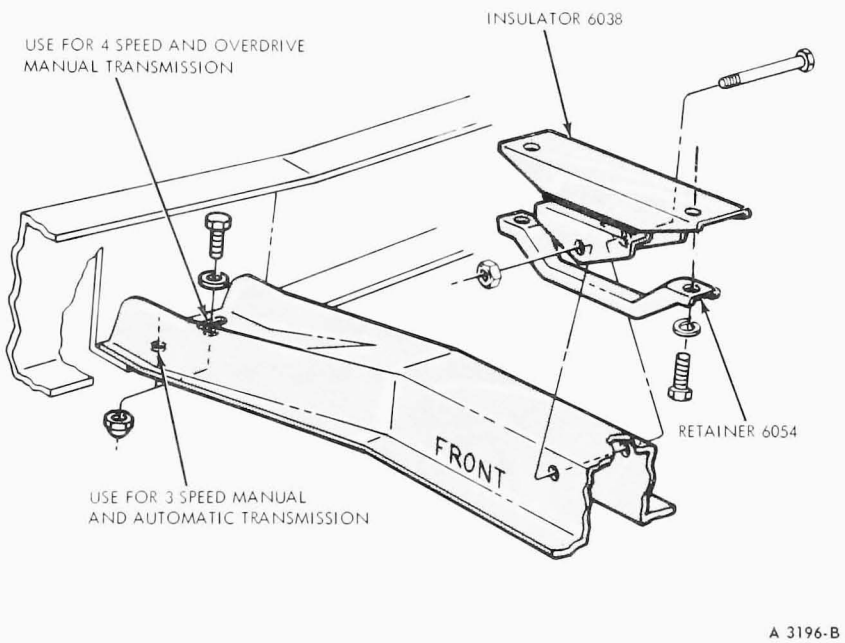

FIG. 8 Engine Rear Support—F-100

CRANKCASE VENTILATION SYSTEM

The crankcase ventilation system components for the various applications are shown in Fig. 10. **Any modification of the system prior to the first sale and registration of the vehicle is subject to Federal (U.S.A.) law and to the penalties under the laws of some states thereafter.**

F-100 AND BRONCO

Removal

1. Disconnect the crankcase vent rear hose from the air cleaner. Pull the hose and elbow out of the grommet in the valve rocker arm cover. Remove the elbow from the vent hose.
2. Remove the air cleaner and intake duct assembly.
3. Disconnect the crankcase vent front hose from the carburetor spacer and the regulator valve in the oil filler cap.
4. Remove the cam-lock oil filler cap

from the valve rocker arm cover. Pull the regulator valve out of the grommet in the oil filler cap.

Installation

1. Insert the regulator valve into the grommet in the oil filler cap. Install the oil filler cap in the valve rocker arm cover and turn the cap to lock it into position.
2. Connect the crankcase vent front hose to the regulator valve and the carburetor spacer.
3. Install the air cleaner and intake duct assembly.
4. Insert the elbow into the grommet in the valve rocker arm cover. Connect the crankcase vent rear hose to the elbow and the air cleaner.
5. Start the engine and check for leaks.

ECONOLINE

Removal

1. Disconnect the crankcase vent front hose from the air cleaner and the oil filler tube.
2. Remove the air cleaner and intake duct assembly.
3. Disconnect the crankcase vent rear hose from the carburetor spacer. Pull the hose and regulator valve out of the grommet in the valve rocker arm cover. Remove the regulator valve from the vent hose.

Installation

1. Insert the regulator valve into the grommet in the valve rocker arm cover. Connect the crankcase vent rear hose to the regulator valve and the carburetor spacer.
2. Install the air cleaner and intake duct assembly.
3. Connect the crankcase vent front hose to the air cleaner and the oil filler tube.
4. Start the engine and check for leaks.

VALVE ROCKER ARM COVER AND ROCKER ARM

F-100 AND BRONCO

Removal

1. Remove air cleaner and intake duct assembly, including the closed crankcase ventilation hoses.
2. Remove the crankcase ventilation regulator valve from the oil filler cap in the left rocker arm cover.
3. Disconnect the spark plug wires from the spark plug by grasping, twisting and pulling the moulded cap by hand only. Remove the wires from the bracket on the valve rocker arm cover(s) and position out of the way.
4. Remove rocker arm cover(s).
5. Remove the valve rocker arm stud nut, fulcrum seat and rocker arm. If removal of the rocker arm stud is necessary, refer to the procedure under Cylinder Head Repairs in Part 21-01.

Installation

The valve rocker arm assembly sequence is shown in Fig. 11.

1. Inspect the rocker arm stud nut for the conditions shown in Fig. 4. If there are small fractures in the chamfered area or the chamfer is more than 1/16 inch wide, replace the stud nut.
2. Apply Lubriplate or equivalent to the top of the valve stem, the fulcrum seat and socket.
3. Install the valve rocker arm, fulcrum seat and stud nut. Adjust the valve clearance following the procedure under Valve Clearance Adjustment.
4. Clean and inspect gasket surfaces. Inspect the gasket sealing surface for damages and distortion due to overtightening of the bolt. Repair and straighten as required.
5. Place the new gaskets in the covers making sure that the tabs of the gasket engage the notches provided in the cover. Position the cover(s) on

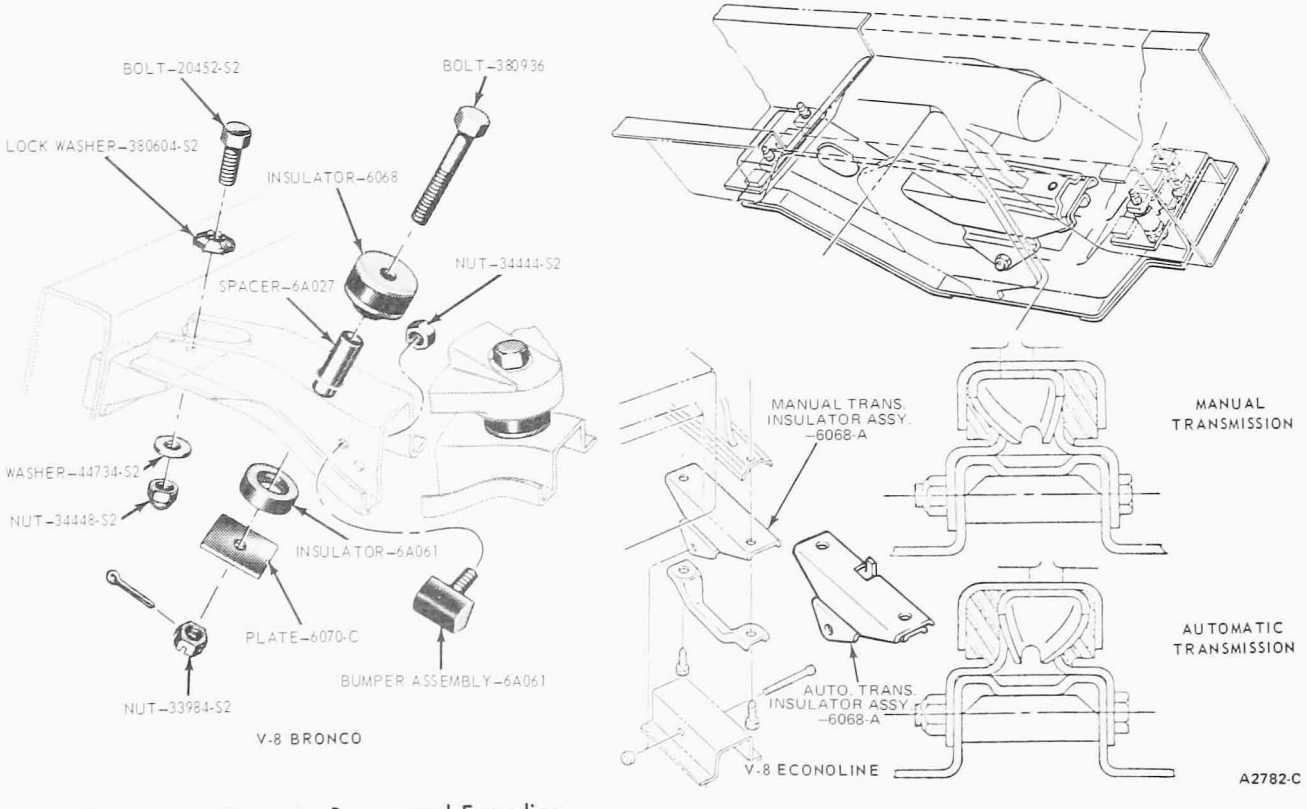

FIG. 9 Engine Rear Support—Bronco and Econoline

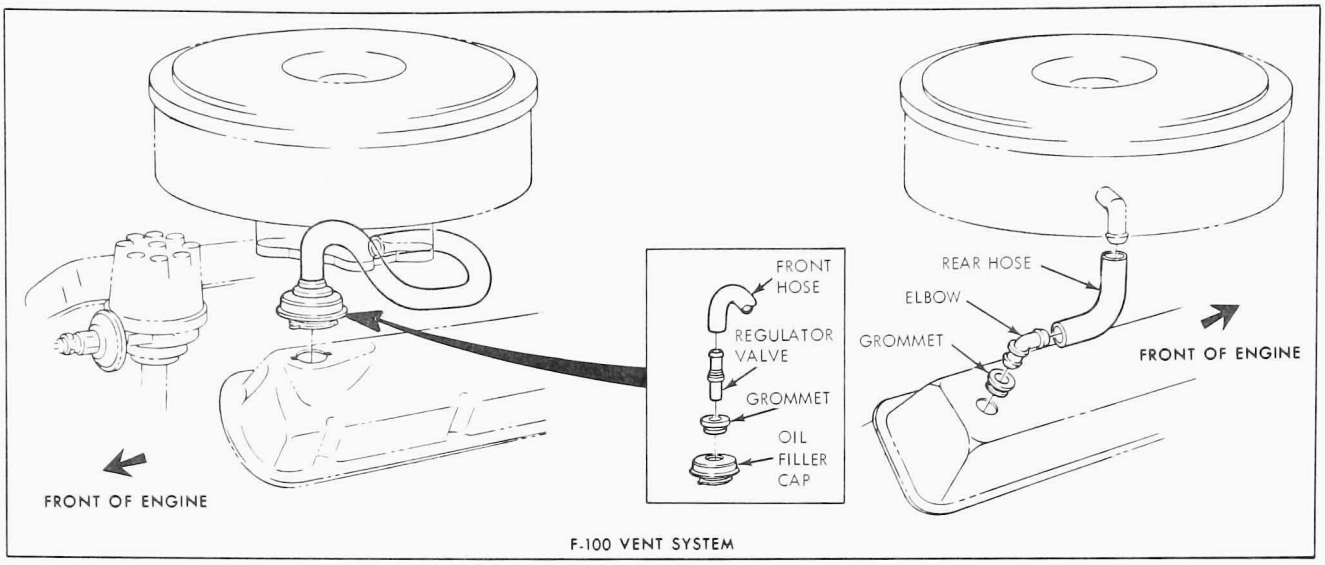

F-100 VENT SYSTEM

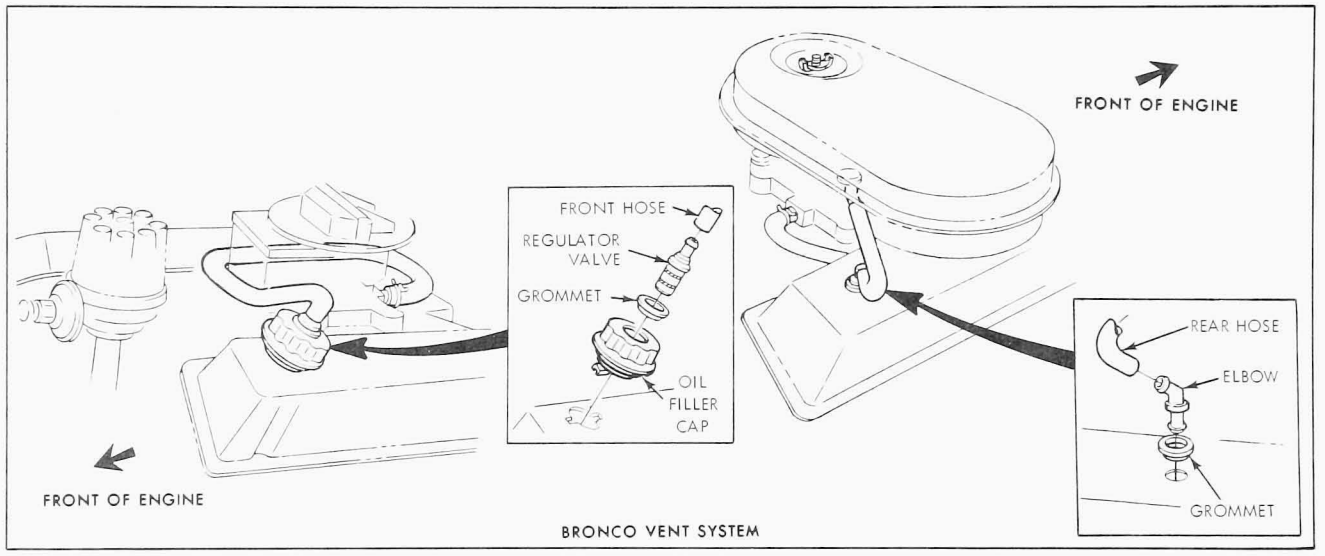

BRONCO VENT SYSTEM

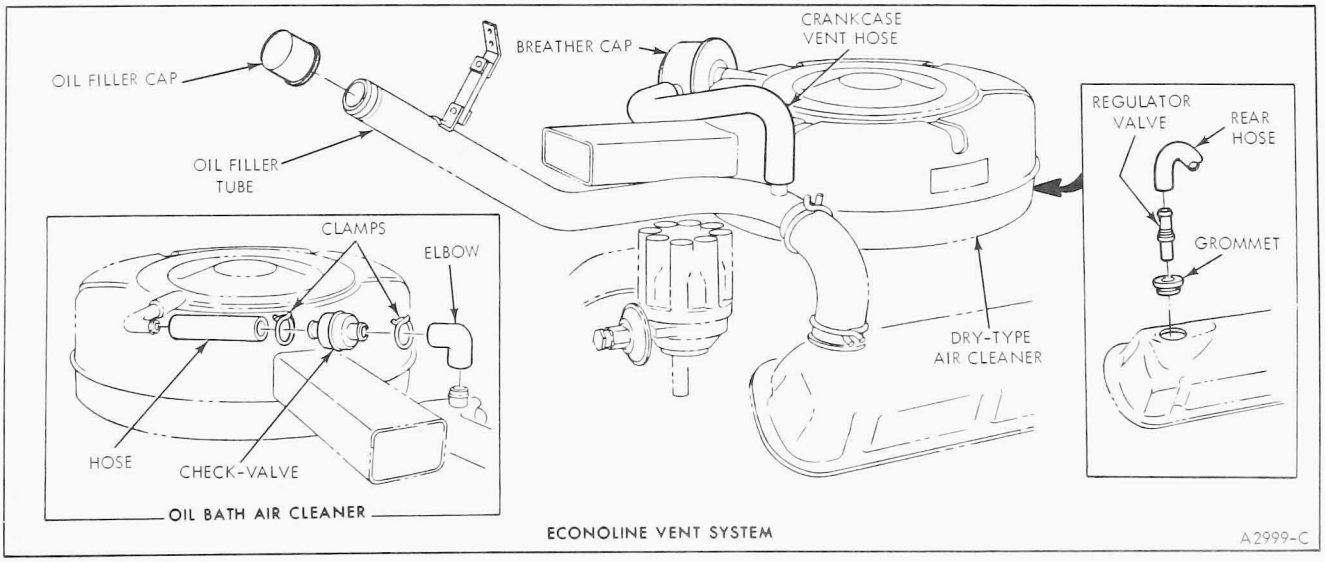

ECONOLINE VENT SYSTEM

A2999-C

FIG. 10 302 CID Crankcase Ventilation Systems

the cylinder head(s). Make sure the gasket seats evenly all around the head. Install the bolts and tighten to specifications. Two minutes later, tighten the bolts to the same specifications.

6. Insert the spark plug wires in the bracket on the rocker arm cover(s) and connect the wires to the spark plugs.
7. Install the crankcase ventilation regulator valve into the oil filler cap in the rocker arm cover.
8. Install air cleaner and intake duct assembly, including the crankcase ventilation hoses.

ECONOLINE

Removal

1. Remove air cleaner and intake duct assembly, including the crankcase ventilation hoses.
2. Disconnect oil filler pipe hose from left rocker arm cover.
3. Remove the crankcase ventilation regulator valve from the right rocker arm cover.
4. Disconnect the spark plug wires from the spark plugs by grasping, twisting and pulling the moulded cap by hand only. Remove the wires from the bracket on the valve rocker arm cover(s) and position out of the way.
5. Remove rocker arm cover(s).
6. Remove the valve rocker arm stud nut, fulcrum seat and rocker arm. If removal of the rocker arm stud is necessary, refer to the procedure under Cylinder Head Repairs in Part 21-01.

Installation

1. Inspect the rocker arm stud nut for the conditions shown in Fig. 4. If there are small fractures in the chamfered area or the chamfer is more than 1/16 inch wide, replace the stud nut.
2. Apply Lubriplate or equivalent to the top of the valve stem, the fulcrum seat and socket.
3. Install the valve rocker arm, fulcrum seat and stud nut. Adjust the valve clearance following the procedure under Valve Clearance Adjustment.
4. Clean and inspect gasket surfaces. Inspect the gasket sealing surface for damages and distortion due to overtightening of the bolt. Repair and straighten as required. Place the new gaskets in the covers making sure that the tabs of the gasket engage the notches provided in the cover.
5. Position the cover(s) on the cylinder head(s). Make sure the gasket seats evenly all around the head. Install the bolts and tighten to specifications. Two minutes later, tighten the bolts to the same specifications.
6. Insert the spark plug wires in the bracket on the rocker arm cover(s) and connect the wires at the spark plugs.
7. Install the crankcase ventilation regulator valve into the right rocker arm cover.
8. Connect the oil filler pipe hose to the left rocker arm cover.
9. Install the air cleaner and intake duct assembly, including the crankcase ventilation hoses.

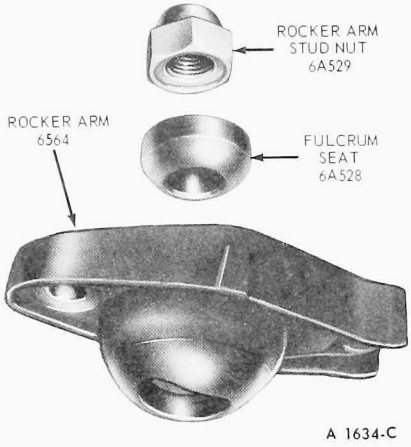

FIG. 11 Valve Rocker Arm Assembly

INTAKE MANIFOLD

The intake manifold assembly is shown in Fig. 12.

Removal

1. Drain the cooling system. Remove the air cleaner and intake duct assembly, including the crankcase ventilation hose.
2. Disconnect the accelerator rod and choke cable from the carburetor. Remove the accelerator retracting spring. Disconnect the automatic transmission kickdown rod at the carburetor (if so equipped).
3. Disconnect the high-tension lead and wires from the coil.
4. Disconnect the spark plug wires from the spark plugs by grasping, twisting and pulling the moulded cap by hand only. Remove the wires from the harness brackets on the valve rocker arm covers. Remove the distributor cap and spark plug wires as an assembly.

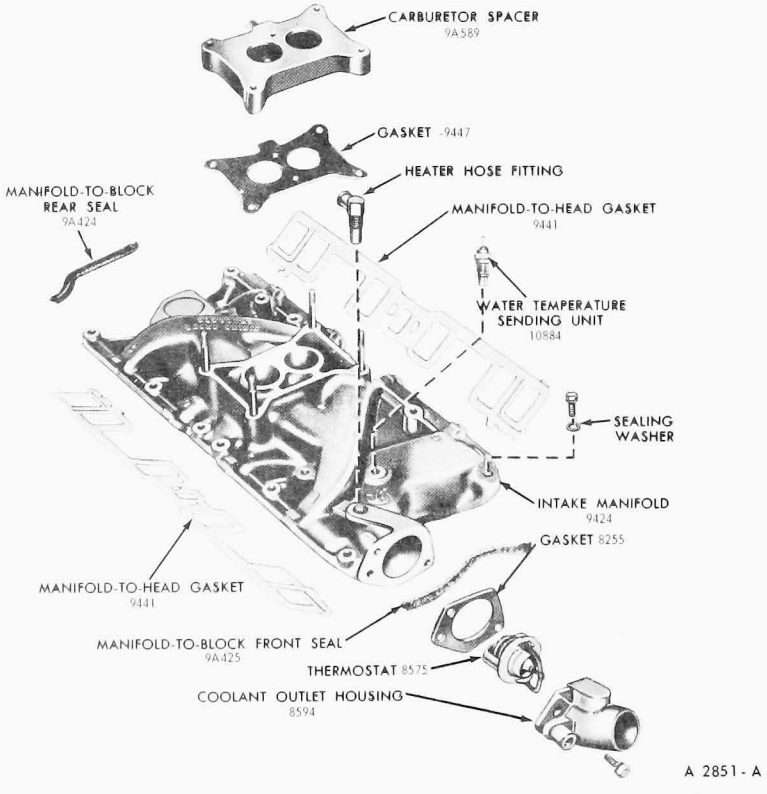

FIG. 12 Intake Manifold Assembly

5. Remove the carburetor fuel inlet line.
6. Disconnect the distributor vacuum hoses from the distributor. Remove the distributor hold down bolt and remove the distributor.
7. Disconnect the radiator upper hose from the coolant outlet housing, and the water temperature sending unit wire at the sending unit. Remove the heater hose from the intake manifold.
8. Loosen the clamp on the water pump by-pass hose at the coolant outlet housing and slide the hose off the outlet housing.
9. Disconnect the crankcase vent hose at the valve rocker arm cover.
10. Remove the intake manifold and carburetor as an assembly. **It may be necessary to pry the intake manifold away from the cylinder heads. Remove the intake manifold gaskets and seals. Discard the intake manifold attaching bolt sealing washers.**
11. If the manifold assembly is to be disassembled, identify all vacuum hoses before disconnecting them. Remove the coolant outlet housing gasket and thermostat. Remove the ignition coil and engine identification tag, temperature sending unit, carburetor, spacer, gasket, vacuum fitting, accelerator retracting spring bracket and choke cable bracket.

Installation

1. If the intake manifold assembly was disassembled, install the temperature sending unit (threads coated with electrical conductive sealer), ignition coil and engine identification tag, carburetor, spacer, gaskets, vacuum fitting, accelerator retracting spring bracket and choke cable bracket. Position the thermostat in the coolant outlet housing. Coat the thermostat gasket with water-resistant sealer and position it on the coolant outlet housing. Install the coolant outlet housing. Connect all vacuum hoses, following the instructions given in Part 23-01.
2. Clean the mating surfaces of the intake manifold, cylinder heads and cylinder block. Use a suitable solvent to remove all traces of oil. Coat the cylinder block seal surfaces with contact adhesive sealer.
3. Position new seals on the cylinder block and new gaskets on the cylinder heads with the gaskets interlocked with the seal tabs. Be sure the holes in the gaskets are aligned with the holes in the cylinder heads.

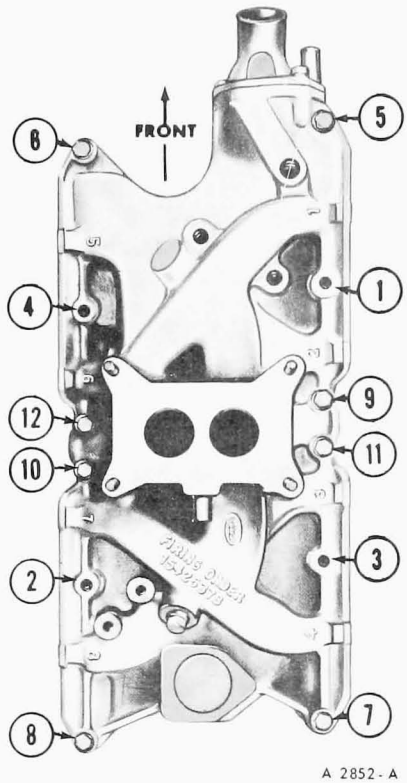

A 2852-A

FIG. 13 Intake Manifold Bolts Tightening Sequence

Apply non-hardening sealer at the four junction points of the seals and gaskets.

4. Carefully lower the intake manifold into position on the cylinder block and cylinder heads. **After the intake manifold is in place, run a finger around the seal area to make sure the seals are in place. If the seals are not in place, remove the intake manifold and position the seals.**
5. Be sure the holes in the manifold gaskets and manifold are in alignment. Install the intake manifold attaching nuts and bolts. Tighten the nuts and bolts in two steps (Fig. 13). Tighten all nuts and bolts in sequence to specifications.

After completing the remaining assembly steps, operate the engine until it reaches normal operating temperature, then retighten the manifold nuts and bolts in sequence to specifications.

6. Install the water pump by-pass hose on the coolant outlet housing. Slide the clamp into position and tighten the clamp.
7. Connect the radiator upper hose. Install the heater hose and connect the hose to the intake manifold.
8. Install the carburetor fuel inlet line.
9. Rotate the crankshaft damper until the No. 1 piston is on TDC at the end of the compression stroke. Position the distributor in the block with the rotor at the No. 1 firing position and the points just open. Install the hold-down clamp.
10. Install the distributor cap. Position the spark plug wires in the harness brackets on the valve rocker arm covers and connect the wires to the plugs.
11. Connect crankcase vent hose. Connect the high-tension lead and coil wires.
12. Connect the accelerator rod and retracting spring. Connect the choke cable. Connect the automatic transmission kickdown rod at the carburetor (if so equipped).
13. Fill and bleed the cooling system.
14. Start the engine and check and adjust the ignition timing. Connect the distributor vacuum hoses to the distributor.
15. Operate the engine at fast idle and check all hose connections and gaskets for leaks. Operate the engine until engine temperatures have stabilized and adjust the engine idle speed and idle fuel mixture. Retighten the intake manifold bolts to specifications.
16. Adjust the transmission throttle linkage. Install the air cleaner and intake duct assembly, including the closed crankcase ventilation hose.

EXHAUST MANIFOLDS

Removal

1. Remove air cleaner and intake duct assembly, including the crankcase ventilation hose.
2. Remove bolts attaching the air cleaner inlet duct (Bronco and F-100 vehicles only) and oil dipstick tube bracket on right exhaust manifold.
3. Disconnect exhaust manifold(s) from inlet pipe(s).
4. Remove the attaching bolts and flat washers, then remove the exhaust manifold.

Installation

1. Clean the mating surfaces of the exhaust manifold(s) and cylinder head(s). Clean the mounting flange of the exhaust manifold(s) and muffler inlet pipe(s).
2. Apply graphite grease to the mating surface of the exhaust manifold(s).
3. Position the exhaust manifold(s) on the cylinder head(s) and install the attaching bolts and flat washers. Working from the center to the ends, tighten the bolts to specifications.
4. Place a new gasket(s) on the muffler inlet pipe(s). Position the muffler

inlet pipe(s) into the manifold(s). Install and tighten the attaching nuts to specifications.
5. Position the air cleaner inlet duct (Bronco and F-100 vehicles only) and the oil dipstick tube bracket on the right exhaust manifold. Install and tighten attaching bolts to specifications.
6. Install air cleaner and intake duct assembly, including the crankcase ventilation hose.

CYLINDER HEADS

If a cylinder head is to be replaced, follow the procedures under Cylinder Head Disassembly and Assembly in this Part, and transfer all valves, springs, spark plugs, etc., to the new cylinder head. Clean and inspect all parts, reface the valves (refer to Part 21-01) and check all assembly clearances before assembling the new or used parts to the new cylinder head.

Removal

1. Remove the intake manifold and carburetor as an assembly, following the procedure under Intake Manifold Removal.
2. Remove the rocker arm cover(s).
3. If the right cylinder head is to be removed, loosen the alternator adjusting arm bolt and remove the alternator mounting bracket bolt and spacer. Swing the alternator down and out of the way. Remove the ignition coil (Bronco and Econoline) and air cleaner inlet duct from the right cylinder head assembly.

If the left cylinder head is being removed, remove the bolts fastening the accelerator shaft assembly at the front of the cylinder head.

4. Disconnect the exhaust manifold(s) from the muffler inlet pipe(s).
5. Loosen the rocker arm stud nuts so that the rocker arms can be rotated to the side. Remove the push rods in sequence (Fig. 14) so that they may be installed in their original positions.
6. Remove the exhaust valve stem caps.
7. Install the cylinder head holding fixtures (Fig. 15). Remove the cylinder head attaching bolts and lift the cylinder head off the block. Remove and discard the cylinder head gasket.

Installation

1. Clean the cylinder head, intake manifold, valve rocker arm cover and cylinder head gasket surfaces. If the cylinder head was removed for a cylinder head gasket replacement, check the flatness of the cylinder head and block gasket surfaces.
2. On the 302 V-8 engine, a specially treated composition gasket is used. **Do not apply sealer to a composition gasket. Position the new cylinder head gasket over the cylinder dowels on the block. Position the cylinder head on the block and install the attaching bolts. Remove the holding fixtures.**
3. The cylinder head bolts are tightened in three progressive steps. Tighten all the bolts in sequence (Fig. 16) to specifications. When cylinder head bolts have been tightened following this procedure, it is not necessary to retighten the bolts after extended operation. However, the bolts may be checked and retightened if desired.
4. Clean the push rods in a suitable solvent. Blow out the oil passage in the push rod with compressed air. Check the ends of the push rods for nicks, grooves, roughness or excessive wear. Visually check the push rods for straightness or check push rod runout with a dial indicator. If runout exceeds the maximum limit at any point, discard the rod. **Do not attempt to straighten push rods.**
5. Lubricate the end of the push rods with Lubriplate or equivalent and install them in their original positions. Apply Lubriplate or equivalent to the valve stem tips. Install the exhaust valve stem cap.
6. Lubricate the rocker arms and fulcrum seats with Lubriplate or equialent, then install the rocker arms. Perform a valve clearance adjustment as outlined under Valve Clearance Adjustment.
7. Position a new gasket(s) on the muffler inlet pipe(s). Connect the exhaust manifold(s) at the muffler inlet pipe(s). Tighten the nuts to specifications.
8. If the right cylinder head was removed, swing the alternator into position and install the alternator attaching bolt and spacer, ignition coil (Bronco and Econoline) and air cleaner inlet duct on the right cylinder head. Adjust the drive belt tension to specifications.

If the left cylinder head was removed, install the accelerator shaft assembly at the front of the cylinder head.

9. Clean the valve rocker arm cover and cylinder head gasket surfaces. Place the new gaskets in the covers making sure that the tabs of the gasket engage the notches provided in the cover. Install the valve rocker arm cover(s).
10. Install the intake manifold and related parts, following the procedure under Intake Manifold Installation.

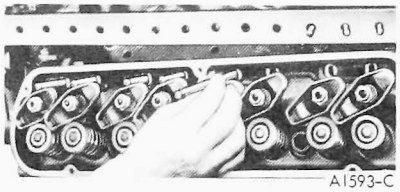

FIG. 14 Removing Valve Push Rods

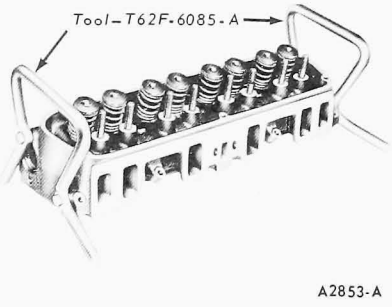

FIG. 15 Cylinder Head Holding Fixtures

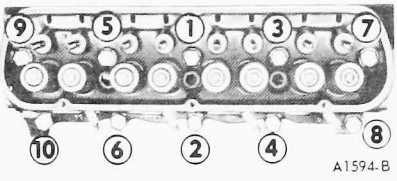

FIG. 16 Cylinder Head Bolt Tightening Sequence

VALVE SPRING, RETAINER AND STEM SEAL

Removal

Broken valve springs or damaged valve stem seals and retainers may be replaced without removing the cylinder head, provided damage to the valve or valve seat has not occured.

1. Refer to Valve Rocker Arm Cover in this section for the cover removal and installation.
2. Remove the applicable spark plug and bring the piston to the top of the bore to prevent accidental loss of the valve into the cylinder.
3. Remove the valve rocker arm stud

nuts, fulcrum seats, valve rocker arms and push rods from the applicable cylinder. Remove the exhaust valve stem cap.

4. Install an air line with an adapter in the spark plug hole and apply air pressure to the cylinder. Failure of the air pressure to hold the valve(s) in the closed position is an indication of valve seat damage and requires removal of the cylinder head.
5. Install the stud nut and position the compressor tool as shown in Fig. 17. Compress the valve spring and remove the retainer locks, spring retainer, sleeve and valve spring.
6. Remove and discard the valve stem seal (Fig. 18).
7. **If air pressure has forced the piston to the bottom of the cylinder, any removal of air pressure will allow the valve(s) to fall into the cylinder. A rubber band, tape or string wrapped around the end of the valve stem will prevent this condition and will still allow enough travel to check the valve for binds.**
8. Inspect the valve stem for damage. Rotate the valve and check the valve stem tip for eccentric movement during rotation. Move the valve up and down through normal travel in the valve guide and check the stem for binds. **If the valve has been damaged, it will be necessary to remove the cylinder head for repairs as outlined in Part 21-01.**

Installation

1. If the condition of the valve proved satisfactory, lubricate the valve stem with heavy engine oil SE. Hold the valve in the closed position and apply air pressure within the cylinder.
2. Install a new valve stem seal (Fig. 18). Place the spring in position over the valve and install the valve spring retainer and sleeve. Compress the valve spring and install the valve spring retainer locks. Remove the compressor tool and stud nut.
3. Lubricate the push rod ends with Lubriplate or equivalent and install the push rod. Apply Lubriplate or equivalent to the tip of the valve stem. Install the exhaust valve stem cap.
4. Apply lubriplate or equivalent to the rocker arms and fulcrum seats. Inspect the stud nuts for conditions shown in Fig. 4. Install the valve rocker arms, fulcrum seats and stud nuts. Adjust the valve clearance following the procedure under Valve Clearance Adjustment.
5. Turn off the air and remove the air line and adapter. Install the spark plug and connect the spark plug wire.
6. Clean and install the rocker arm cover.

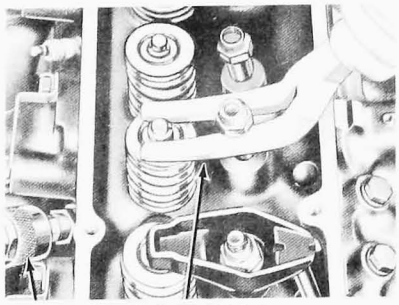

FIG. 17 Compressing Valve Spring—In Chassis

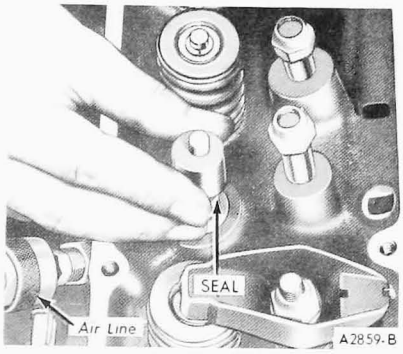

FIG. 18 Removing or Installing Valve Stem Seal

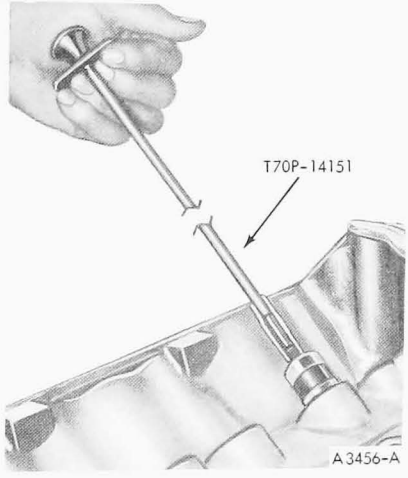

FIG. 19 Removing Valve Lifter

VALVE LIFTER

Before replacing a hydraulic valve lifter for noisy operation, be sure the noise is not caused by improperly adjusted valve to rocker arm clearance or by worn rocker arms or push rods.

Removal

1. Remove the valve rocker arm cover, then loosen the valve rocker arm stud nut and rotate the rocker arms to the side.
2. Remove the valve push rods in sequence so that they can be installed in their original positions.
3. Using Tool T70P-14151 shown in Fig. 19, remove the valve lifters and place them in a rack so that they can be installed in their original bores.

Installation

Valve lifters and bores are to be lubricated with heavy engine oil SE before installation.

1. Clean and install the valve lifters in the bores from which they were removed, using Tool T70P-14151. If a new lifter(s) is being installed, check the new lifter(s) for a free fit in the bore in which it is to be installed. Lubricate the lifter(s) and bore(s) with heavy engine oil before inserting the lifter.
2. Lubricate the ends of the push rods with Lubriplate or equivalent and install the push rods in their original positions. Apply Lubriplate or equivalent to the valve stem tip.
3. Lubricate the rocker arms and fulcrum seats with Lubriplate or equivalent and position the rocker arms over the push rods. Perform a valve clearance adjustment as outlined in this part.
4. Install the valve rocker arm covers.

WATER PUMP

F-100 AND BRONCO

Removal

1. Drain the cooling system.
2. Remove the bolts securing the fan shroud to the radiator, if so equipped. Position the shroud over the fan.
3. Disconnect the radiator lower hose, heater hose and by-pass hose at the water pump. Remove the drive belts, fan, fan spacer and pulley.

   Remove the fan shroud, if so equipped.
4. Loosen the alternator pivot bolt and bolt attaching the alternator adjusting arm to water pump.
5. Remove the bolts securing the water pump to cylinder front cover. Remove the water pump.

Installation

Before a water pump is reinstalled, check it for damage. If it is damaged, replace it.

1. Remove all gasket material from the mounting surfaces of the cylinder front cover and water pump.
2. Position a new gasket, coated on both sides with sealer, on the cylinder front cover; then, install the pump.
3. Install the attaching bolts and tighten them to specifications.
4. Install the alternator pivot bolt and bolt attaching the alternator adjusting arm to the water pump.
5. Position the fan shroud over the water pump, if so equipped. Install the pulley, spacer and fan. Install and adjust the drive belts to the specified belt tension. Connect the radiator hose, heater hose and by-pass hose.

   Install the fan shroud bolts, if so equipped.
6. Fill and bleed the cooling system. Operate the engine until normal operating temperatures have been reached and check for leaks.

ECONOLINE

Removal

1. Remove the air cleaner and intake duct assembly, including the crankcase ventilation hose.
2. Drain the cooling system.
3. Disconnect the radiator upper hose at the engine and lower hose at the radiator. Remove the radiator attaching bolts and nuts. Remove the radiator.
4. Remove drive belts, fan, spacer and water pump pulley.
5. Loosen the alternator pivot bolt and bolt attaching the alternator adjusting arm to the water pump.
6. Disconnect heater hose and by-pass hose at water pump.
7. Remove the bolts securing the water pump to the cylinder front cover. Remove the water pump.

Installation

Before a water pump is reinstalled, check it for damage. If it is damaged, replace it.

1. Remove all gasket material from the mounting surfaces of the cylinder front cover and water pump.
2. Position a new gasket, coated on both sides with sealer, on the cylinder front cover; then, install the pump.
3. Install the attaching bolts and tighten them to specifications.
4. Connect the heater hose and by-pass hose at the water pump.
5. Tighten the alternator pivot bolt and bolt attaching alternator adjusting arm to the water pump.
6. Install the water pump pulley, spacer and fan drive belts.
7. Install the radiator, connecting lower hose at the radiator and upper hose at the engine.
8. Fill and bleed the cooling system. Operate the engine until normal operating temperatures have been reached and check for leaks.
9. Install the air cleaner and intake duct assembly, including the crankcase ventilation hose.

CYLINDER FRONT COVER AND TIMING CHAIN

Removal

1. On Econoline vehicles, remove the air cleaner and intake duct assembly, including the crankcase ventilation hose.
2. Drain the cooling system and the crankcase.
3. Disconnect the radiator lower hose from the water pump. On Econoline vehicles, remove the radiator upper hose at the engine. Remove the radiator attaching bolts and remove the radiator attaching bolts and remove the radiator.
4. Disconnect the heater hose from the water pump. Slide the water pump by-pass hose clamp toward the water pump.
5. Loosen the alternator pivot bolt and bolt retaining the alternator adjusting arm to the water pump.
6. Remove the bolts securing the fan shroud to the radiator, if so equipped. Position the shroud over the fan, if so equipped. Remove the fan, spacer, pulley and drive belts.

   Remove the fan shroud, if so equipped.
7. Remove the crankshaft pulley from the crankshaft vibration damper.

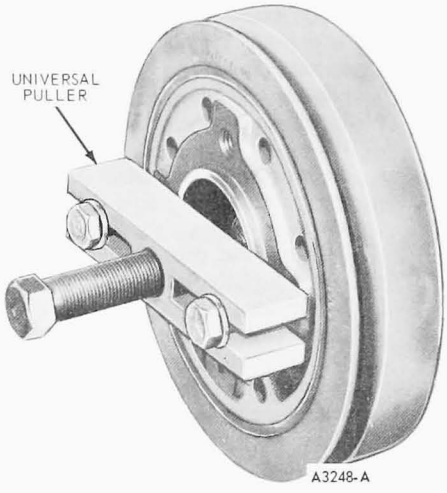

FIG. 20 Crankshaft Vibration Damper Removal—F-100

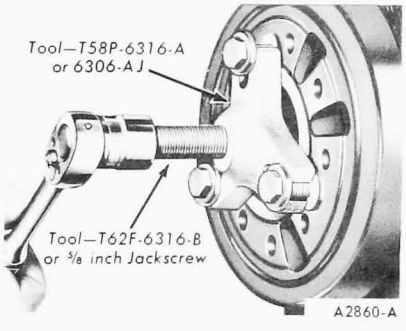

FIG. 21 Crankshaft Vibration Damper Removal—Bronco and Econoline

   Remove the damper attaching bolt and washer. Install the puller on the crankshaft vibration damper (Figs. 20 and 21) and remove the vibration damper.
8. Disconnect the fuel pump outlet line from the fuel pump. Disconnect the vacuum inlet and outlet lines from the vacuum section of the fuel pump (Bronco only). Remove the fuel pump attaching bolts and lay the pump to one side with the flexible fuel lines still attached.
9. Remove the oil level dipstick and bolt fastening the dipstick tube to the exhaust manifold.
10. Remove the oil pan-to-cylinder front cover attaching bolts. Use a thin bladed knife to cut the oil pan gasket flush with the cylinder block face prior to separating the cover from the cylinder block. Remove the cylinder front cover and water pump as an assembly.
11. Discard the cylinder front cover

gasket. Remove the crankshaft front oil slinger.

12. Rotate the crankshaft in a counterclockwise direction (as viewed from the front) to take up the slack on the left side of the chain.
13. Establish a reference point on the block and measure from this point to the chain.
14. Rotate the crankshaft in the opposite direction to take up the slack on the right side of the chain. Force the left side of the chain out with the fingers and measure the distance between the reference point and the chain. The deflection is the difference between the two measurements.

If the deflection exceeds 1/2 inch, replace the timing chain and/or sprockets.

15. Crank the engine until the timing marks on the sprockets are positioned as shown in Fig. 22.
16. Remove the camshaft sprocket capscrew, washers and fuel pump eccentric. Slide both sprockets and the timing chain forward, and remove them as an assembly (Fig. 23).

Installation

1. Position the sprockets and timing chain on the camshaft (Fig. 23). Be sure the timing marks on the sprockets are positioned as shown in Fig. 22.
2. Install the fuel pump eccentric, washers and camshaft sprocket capscrew. Tighten the sprocket capscrew to specifications. Install the crankshaft front oil slinger (Fig. 24).
3. Clean the cylinder front cover, oil pan and the block gasket surfaces. Clean the oil pan gasket surface where the oil pan and front cover fasten.

Install a new oil seal, following procedures under Front Oil Seal Removal and Installation.

4. Lubricate the timing chain and sprockets with heavy engine oil. Apply heavy engine oil SE to the fuel pump eccentric.
5. Coat the gasket surface of the oil pan with sealer, then cut and position the required sections of a new gasket on the oil pan and apply sealer at the corners. Install the pan seal as required.

Coat the gasket surfaces of the block and cover with sealer, and position a new gasket on the block.

6. Position the cylinder front cover on the cylinder block. Use care when installing the cover to avoid seal damage or possible gasket mislocation.

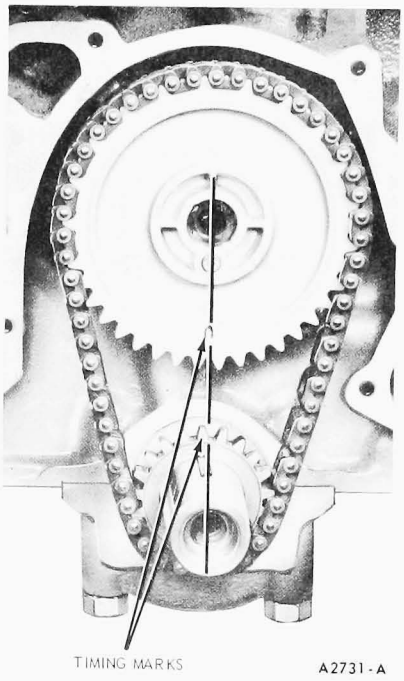

FIG. 22 Aligning Timing Marks

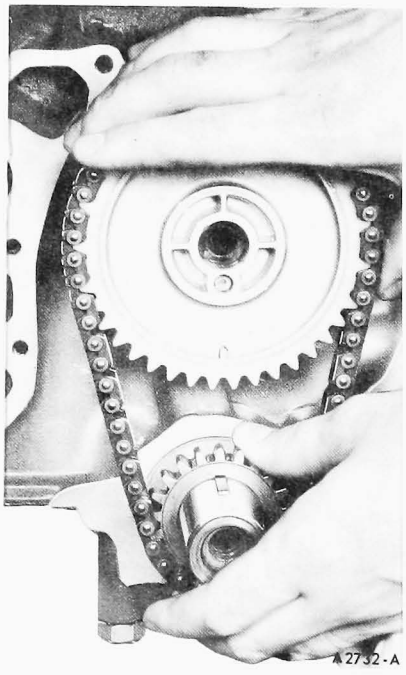

FIG. 23 Removing or Installing Timing Chain

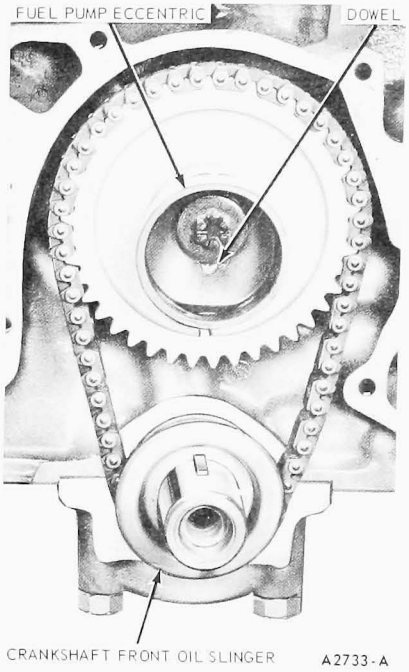

FIG. 24 Fuel Pump Eccentric and Front Oil Slinger—Installed

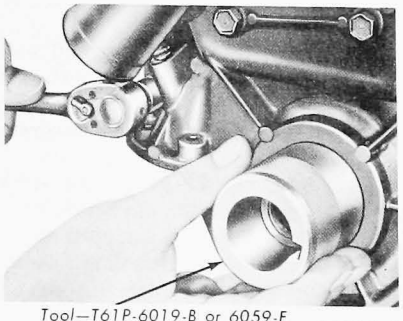

FIG. 25 Aligning Cylinder Front Cover

7. Install the cylinder front cover-to-seal alignment tool into proper position (Fig. 25).
8. It may be necessary to force the cover downward to slightly compress the pan gasket. This operation can be facilitated by using a suitable tool at the front cover attaching hole locations.
9. Coat the threads of the attaching screws with oil-resistant sealer and install the screws. While pushing in on the alignment tool, tighten the oil pan to cover attaching screws to specifications. Tighten the cover to block attaching screws to specifications. Remove the pilot.
10. Apply Lubriplate or equivalent to the oil seal rubbing surface of the vibration damper inner hub to prevent damage to the seal. Apply a white lead and oil mixture to the front of the crankshaft for damper installation.
11. Line up the crankshaft vibration damper keyway with the key on the crankshaft. Install the vibration damper on the crankshaft (Fig. 26). Install the capscrew and washer. Tighten the screw to specifications. Install the crankshaft pulley.
12. Lubricate the fuel pump lever with heavy engine oil and install the fuel pump using a new gasket. Connect the fuel pump outlet pipe. Connect the vacuum inlet and outlet lines (Bronco only).
13. Tighten the alternator pivot bolt and bolt attaching the alternator adjusting arm to the water pump.
14. Position the fan shroud over the water pump, if so equipped. Install the water pump pulley, spacer, fan and drive belts.
15. Connect the heater hose and water pump by-pass hose. Slide the by-pass hose clamp into position.
16. On Econoline vehicles only, install the radiator.
17. Connect the radiator hose(s). Install the bolts securing the fan shroud to the radiator, if so equipped.
18. Fill and bleed the cooling system.
19. Operate the engine at fast idle and check the coolant level and check for oil leaks. Check and adjust the ignition timing.
20. Install the air cleaner and intake duct assembly, including the crankcase ventilation hose.

FRONT OIL SEAL

Removal

1. Remove the cylinder front cover.
2. Drive out the old seal with a pin punch.

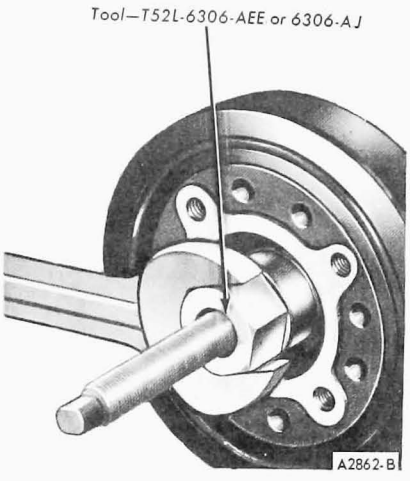

FIG. 26 Installing Crankshaft Vibration Damper

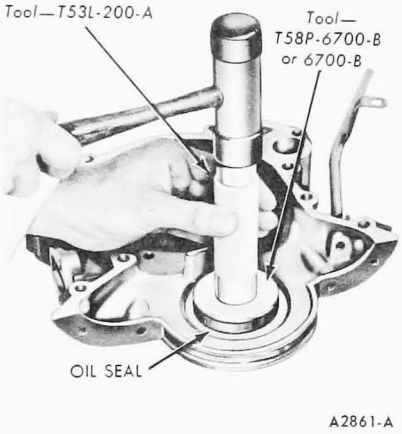

FIG. 27 Installing Crankshaft Front Oil Seal

Installation

1. Coat a new seal with grease, then install the seal in the cover (Fig. 27). Drive the seal in until it is fully seated in the recess.
2. Check the seal after installation to be sure the spring is properly positioned in the seal.
3. Install the cylinder front cover.

CAMSHAFT

The camshaft and related parts are shown in Fig. 28.

Removal

1. On Econoline vehicles, remove the grille.
2. Drain the cooling system. Disconnect the radiator upper and lower hoses. Disconnect the transmission oil cooler lines, if so equipped. Remove the radiator.
3. Remove the cylinder front cover and the timing chain, following the procedure under Cylinder Front Cover and Timing Chain Removal.
4. Disconnect the spark plug wires by hand only from the spark plugs and remove the wires from the ignition harness brackets on the valve rocker arm covers. Disconnect the coil high tension lead from the coil. Remove the distributor cap and spark plug wire assembly.
5. Disconnect the ignition coil wires from the coil.
6. Disconnect the distributor vacuum hoses from the carburetor and intake manifold. Remove the distributor hold-down bolt and clamp, then remove the distributor.
7. Disconnect the heater hose from the intake manifold.

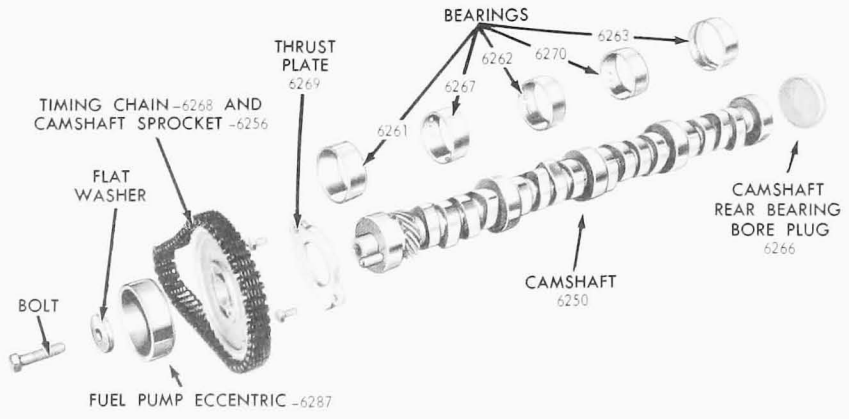

FIG. 28 Camshaft and Related Parts

8. Disconnect the accelerator rod and choke cable from the carburetor. Remove the accelerator retracting spring. Disconnect the automatic transmission kickdown rod at the carburetor and transmission vacuum line at the intake manifold (if so equipped).
9. Disconnect the water temperature sending unit wire from the sending unit and the engine ground strap at the engine.
10. Remove the crankcase ventilation regulator valve from the valve rocker arm cover. Remove the valve rocker arm covers. Loosen the valve rocker arm stud nuts and rotate the rocker arms to the side.
11. Remove the intake manifold and carburetor as an assembly. Remove the intake manifold gaskets and seals.
12. Remove the valve push rods in sequence so that they can be installed in their original positions.
13. Using Tool T70P-14151 shown in Fig. 19, remove the valve lifters and place them in a rack so that they can be installed in their original bores.
14. Remove the camshaft thrust plate. Carefully remove the camshaft by pulling toward the front of the engine. **Use caution to avoid damaging the camshaft bearings.**

Installation

1. Oil the camshaft journals and apply Lubriplate or equivalent to the lobes. Carefully slide the camshaft through the bearings. Lubricate the camshaft thrust plate with heavy engine oil SE and install the camshaft thrust plate with the groove toward the cylinder block.
2. Lubricate the lifters and lifter bore with heavy engine oil. Install the valve lifters in the bores from which they were removed, using Tool T70P-14151.
3. Lubricate the ends of the push rods with Lubriplate or equivalent and install the push rods in their original positions. Apply Lubriplate or equivalent to the valve stem tips. Lubricate the rocker arms and fulcrum seats with Lubriplate or equivalent and position the rocker arms over the push rods.
4. Install the intake manifold and related parts by following the steps under Intake Manifold Installation.
5. Connect the water temperature sending unit and the engine ground strap.
6. Connect the accelerator rod, choke cable and retracting spring. Connect the automatic transmission kickdown rod at the carburetor and transmission vacuum line at the intake manifold (if so equipped).
7. Connect the heater hose at the intake manifold. Position and connect the fuel line.
8. Replace the crankshaft front oil seal. Install the timing chain, cylinder front cover and related parts, following the steps under Cylinder Front Cover and Timing Chain Installation.
9. With No. 1 piston on TDC at the end of the compression stroke, position the distributor in the block with the rotor at the No. 1 firing position and the points just starting to open. Install the hold-down clamp.
10. Perform a valve clearance adjustment as outlined in this Part.
11. Clean the valve rocker arm covers and the cylinder head gasket surface. Place the new gaskets in the covers making sure that the tabs of the gasket engage the notches provided in the cover.
12. Position the covers on the cylinder heads. **Make sure the gasket seats evenly all around the cylinder head. Tighten the bolts to specifications in two steps. Two minutes later, tighten the bolts to the same specifications.**
13. Clean and install the crankcase ventilation system.
14. Connect the ignition coil wires.
15. Install the distributor cap. Position the spark plug wires in the harness brackets on the valve rocker arm covers and connect the wires to the plugs. Connect the high-tension lead at the coil.
16. Install the radiator and connect the hoses. Connect the oil cooler lines, if so equipped.
17. Fill and bleed the cooling system. Fill the crankcase with the proper grade and quantity of engine oil.
18. Start the engine, then check and adjust the ignition timing. Connect the distributor and intake manifold vacuum hoses.
19. Operate the engine at fast idle and check all hose connections and gaskets for leaks. Operate the engine until engine temperatures have stabilized, then adjust the engine idle speed and idle fuel mixture. Re-torque intake manifold bolts and nuts.
20. Install the air cleaner and intake duct assembly, including the crankcase ventilation hose.
21. On Econoline vehicles, install the grille.

FLYWHEEL

Removal

1. On a vehicle with a manual-shift transmission, remove the clutch pressure plate and disc following the procedures in Group 16.

On a vehicle with an automatic transmission, remove the transmission and converter housing following the procedure in Group 17.

2. To check flywheel face runout or to replace a flywheel ring gear for a manual-shift transmission, refer to Part 21-01.
3. Remove the flywheel attaching bolts and remove the flywheel.

Installation

1. Coat the threads of the flywheel attaching bolts with oil-resistant sealer. Position the flywheel on the crankshaft flange. Install and tighten the bolts in sequence across from each other to specifications.
2. On a vehicle with a manual-shift transmission, check the flywheel runout, following the procedure in Part 21-01. Install the clutch pressure plate, disc and the transmission, following the procedures in Group 16.

On a vehicle with an automatic transmission, check the flywheel runout, following the procedure in Part 21-01. Install the transmission and converter housing, following the procedure in Group 17.

CLUTCH PILOT BUSHING

Removal

1. Remove the clutch pressure plate and disc, following the procedures in Group 16.
2. Remove the pilot bushing as shown in Fig. 29.

Installation

1. Coat the pilot bushing bore in the crankshaft with a small quantity of wheel bearing lubricant. **Avoid using too much lubricant as it may be thrown onto the clutch disc when the clutch rotates.**
2. Install the pilot service bearing as shown in Fig. 30.
3. Install the clutch pressure plate, disc and the transmission, following the procedures in Group 16.

CAMSHAFT REAR BEARING BORE PLUG

Removal

1. Remove the transmission, clutch pressure plate and disc, following the procedures in Group 16.

On a vehicle with an automatic transmission, remove the transmission and converter housing following the procedure in Group 17.

2. Remove the flywheel attaching bolts and remove the flywheel. Remove the engine rear cover plate.
3. Replace the rear bearing bore plug as detailed in Part 21-01.

Installation

1. Coat the flywheel attaching bolts with oil-resistant sealer. Position the engine rear cover plate on the cylinder block dowels. Position the flywheel on the crankshaft flange. Install and tighten the attaching bolts in sequence, across from each other, to specifications.
2. On a vehicle with a manual-shift transmission, install the clutch pressure plate, disc and the transmission following the procedures in Group 16.
3. On a vehicle with an automatic transmission, install the transmission and converter housing, following the procedure in Group 17.

OIL PAN

F-100

Removal

1. Remove the oil dipstick.
2. Remove the bolts attaching the fan shroud to the radiator and position the shroud over the fan.
3. Remove the nuts and lock washers attaching the engine support insulators to the chassis bracket.
4. If equipped with an automatic transmission, disconnect the oil cooler line at the left side of the radiator.
5. Raise the engine and place wood blocks under the engine supports.
6. Drain the crankcase.
7. Remove the oil pan attaching bolts and lower the oil pan onto the crossmember.
8. Remove the two bolts attaching the oil pump pick-up tube to the oil pump. Lower the pick-up tube and screen into the oil pan.
9. Remove the oil pan from the vehicle.

Installation

1. Clean oil pan, inlet tube and gasket surfaces. Inspect the gasket sealing surface for damages and distortion due to overtightening of the bolts. Repair and straighten as required.
2. Position a new oil pan gasket and end seals to the cylinder block (Fig. 31).

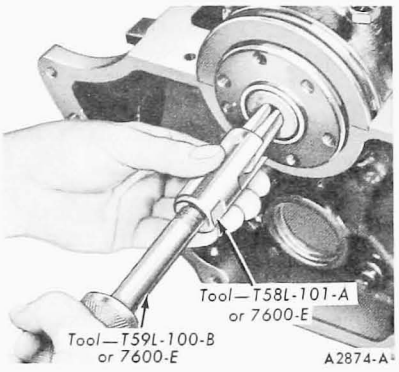

FIG. 29 Removing Clutch Pilot Bushing

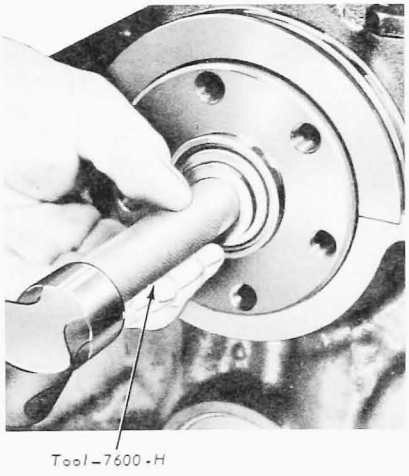

FIG. 30 Installing Clutch Pilot Bearing

3. Position the oil pick-up tube and screen to the oil pump, and install the lower attaching bolt and gasket loosely.
4. Place the oil pan on the crossmember. Install the upper pick-up tube bolt. Tighten the pick-up tube bolts to specifications.
5. Position the oil pan to the cylinder block and install the attaching bolts. Tighten to specifications.
6. Raise the engine and remove the wood blocks. Lower the engine and install the insulator-to-chassis bracket nuts and washers. Tighten the nuts to specifications.
7. If equipped with an automatic transmission, connect the oil cooler line at the radiator.
8. Install the fan shroud attaching bolts.
9. Fill the crankcase with the proper grade and quantity of engine oil. Install the oil dipstick. Start the engine and operate it until it reaches normal operating temperature, then check for leaks.

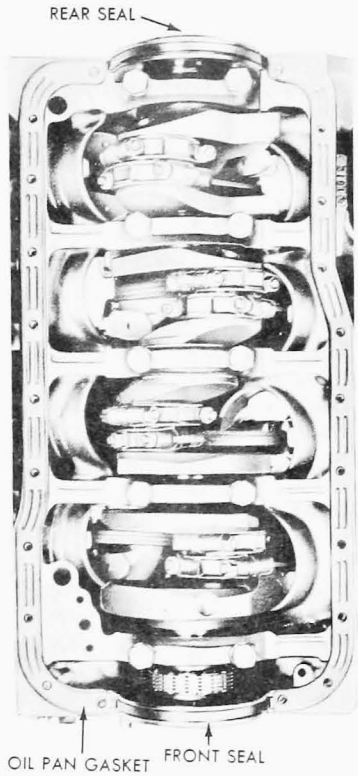

FIG. 31 Oil Pan Gaskets and Seals Installed

BRONCO

Removal

1. Remove the air cleaner, then remove the air cleaner duct. Remove the oil dipstick tube fastened to the exhaust manifold.
2. Drain crankcase and remove the oil pan attaching bolts. Remove the oil pan, seals and gasket.
3. Remove the oil pump pick-up tube and screen assembly.

Installation

1. Clean the oil pump pick-up tube and screen assembly. Inspect the gasket sealing surface for damages and distortion due to overtightening of the bolts. Repair and straighten as required.
2. Position new oil pan gasket and end seals to cylinder block (Fig. 31), then install the oil pump pick-up tube and screen assembly with the attaching bolts and nut.
3. Position the oil pan on the cylinder block, then install the attaching bolts.
4. Install the oil dipstick tube.
5. Install the air cleaner duct and air

cleaner. Start the engine and check for leaks.

ECONOLINE

Removal

1. Raise the vehicle on a hoist.
2. Remove the bolts fastening the oil dipstick tube to the exhaust manifold and oil pan. Position aside.
3. Drain the crankcase and remove the oil filter.
4. Disconnect steering rod end at idler arm.
5. Remove nuts and washers attaching engine front supports to engine support crossmember (Fig. 32).
6. Position a support jack under the damper and raise engine as required.
7. Remove nuts attaching engine support crossmember to side rails and frame. Remove engine support crossmember.
8. Position engine support tools (T68E-6038-A) to side rails and front engine supports. Install washers and nuts fastening support tools to side rails (Fig. 33). Lower support jack.
9. Remove oil pan bolts. Remove oil pan and inlet tube.

Installation

1. Clean oil pan, inlet tube and gasket surfaces. Inspect the gasket sealing surface for damages and distortion due to overtightening of the bolts. Repair and straighten as required.
2. Position a new oil pan gasket and end seals to cylinder block (Fig. 31), then install the oil pump inlet tube.
3. Position the oil pan to the cylinder block and install the attaching bolts and tighten to specifications.
4. Position a support jack under the damper and raise the engine as required.
5. Remove the engine support tools.
6. Position the engine support crossmember to side rails and frame. Install attaching bolts and nuts and tighten to specifications.
7. Lower engine and remove jack.
8. Install washers and nuts attaching engine supports to specifications.
9. Connect steering rod end at idler arm.
10. Connect the oil dipstick tube to the oil pan and exhaust manifold.
11. Install oil filter.
12. Lower vehicle and fill crankcase. Start the engine and check for leaks.

OIL PUMP

Removal

1. Remove the oil pan and related parts as outlined under Oil Pan Removal.
2. Remove the oil pump inlet tube and screen assembly.

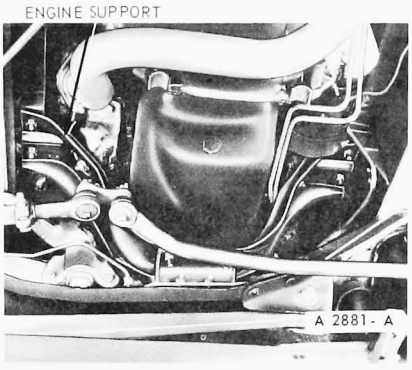

FIG. 32 Engine Support Crossmember—Econoline

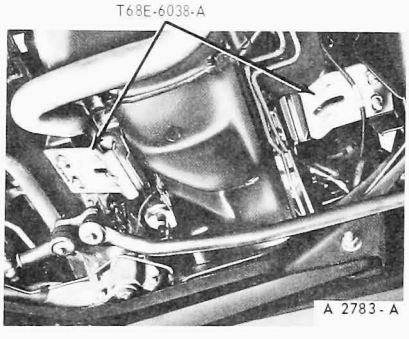

FIG. 33 Engine Support Tools Installed—Econoline

3. Remove the oil pump attaching bolts and remove the oil pump gasket and intermediate drive shaft.

Installation

1. Prime the oil pump by the inlet port with engine oil. Rotate the pump shaft to distribute the oil within the pump body.
2. Position the intermediate drive shaft into the distributor socket. With the shaft firmly seated in the distributor socket, the stop on the shaft should touch the roof of the crankcase. Remove the shaft and position the stop as necessary.
3. Position a new gasket on the pump housing. With the stop properly positioned, insert the intermediate drive shaft into the oil pump. Install the pump and shaft as an assembly. **Do not attempt to force the pump into position if it will not seat readily. The drive shaft hex may be misaligned with the distributor shaft. To align, rotate the intermediate drive shaft into a new position.** Tighten the oil pump attaching screws to specifications.
4. Clean and install the oil pump inlet tube and screen assembly.
5. Install the oil pan and related parts as outlined under Oil Pan Installation.

CRANKSHAFT REAR OIL SEAL

A split, lip-type crankshaft rear oil seal is used for replacement on 302 CID engines. **If replacement is necessary, this type of seal must be used. The complete seal can be replaced without removing the crankshaft.**

Removal

1. Remove the oil pan and the oil pump (if required).
2. Loosen all the main bearing cap bolts, thereby lowering the crankshaft slightly but not to exceed 1/32 inch.
3. Remove the rear main bearing cap, and remove the oil seal from the bearing cap and cylinder block. On the block half of the seal, use a seal removal tool or install a small metal screw in one end of the seal, and pull on the screw to remove the seal. **Exercise caution to prevent scratching or damaging the crankshaft seal surfaces.**
4. Remove the oil seal retaining pin from the bearing cap. **The pin is not used with the split, lip-type seal.**

Installation

1. Carefully clean the seal grooves in the cap and block with a brush and solvent.
2. Dip the split, lip-type seal halves in clean engine oil.
3. Carefully install the upper seal (cylinder block) into its groove with the undercut side of the seal toward the FRONT of the engine (Fig. 34), by rotating it on the seal journal of the crankshaft until approximately 3/8 inch protrudes below the parting surface.

Be sure no rubber has been shaved from the outside diameter of the seal by the bottom edge of the groove.

4. Tighten the remaining bearing cap bolts and torque to specifications.
5. Install the lower seal in the rear main bearing cap with the undercut side of the seal toward the FRONT of the engine (Fig. 34). Allow the seal to protrude approximately 3/8 inch above the parting surface to mate with the upper seal when the cap is installed.
6. Apply a thin coating of oil-resistant sealer to the rear main bearing cap at the rear of the top mating surface (Fig. 35). **Do not apply sealer to the area forward of the side seal groove.** Install the rear main bearing cap. Tighten the cap bolts to specifications.
7. Install the oil pump and oil pan. Fill

the crankcase with the proper amount and viscosity oil.
8. Operate the engine and check for oil leaks.

MAIN BEARING

The main bearing inserts are selective fit. Refer to the procedures under Fitting Main and Connecting Rod Bearings in Part 21-01.

Removal

1. Drain the crankcase. Remove the oil level dipstick. Remove the oil pan and related parts, following the procedure under Oil Pan Removal in this section.
2. Remove the oil pump inlet tube assembly and the oil pump.
3. **Replace one bearing at a time, leaving the other bearings securely fastened.** Remove the main bearing cap to which new bearings are to be installed.
4. Insert the upper bearing removal tool (tool 6331) in the oil hole in the crankshaft.
5. Rotate the crankshaft in the direction of engine rotation to force the bearing out of the block.
6. If the rear main bearing is being replaced, remove and discard the rear oil seal from the bearing cap.

Loosen all main bearing bolts, thereby lowering the crankshaft slightly but not to exceed 1/32 inch. Remove the block half of the rear oil seal. Use a seal removal tool or install a small metal screw in one end of the seal and pull on the screw to remove the seal. **Be careful not to burr the crankshaft seal rubbing surface.**

7. Clean the crankshaft journals. Inspect the journals and thrust faces (thrust bearing) for nicks, burrs or bearing pick-up that would cause premature bearing wear.

Installation

1. If the rear main bearing is being replaced, clean the rear oil seal groove in the block with a brush and solvent.

Carefully install the upper seal (split lip-type) into its groove with the undercut side of the seal toward the FRONT of the engine (Fig. 34) by rotating it on the seal journal of the crankshaft until approximately 3/8 inch protrudes below the parting surface.

Be sure no rubber has been shaved from the outside diameter of the seal by the bottom edge of the groove.

Tighten the bolts on main bearings 1, 2, 3 and 4, thereby raising the crankshaft to its original position. Tighten the bolts to specifications.

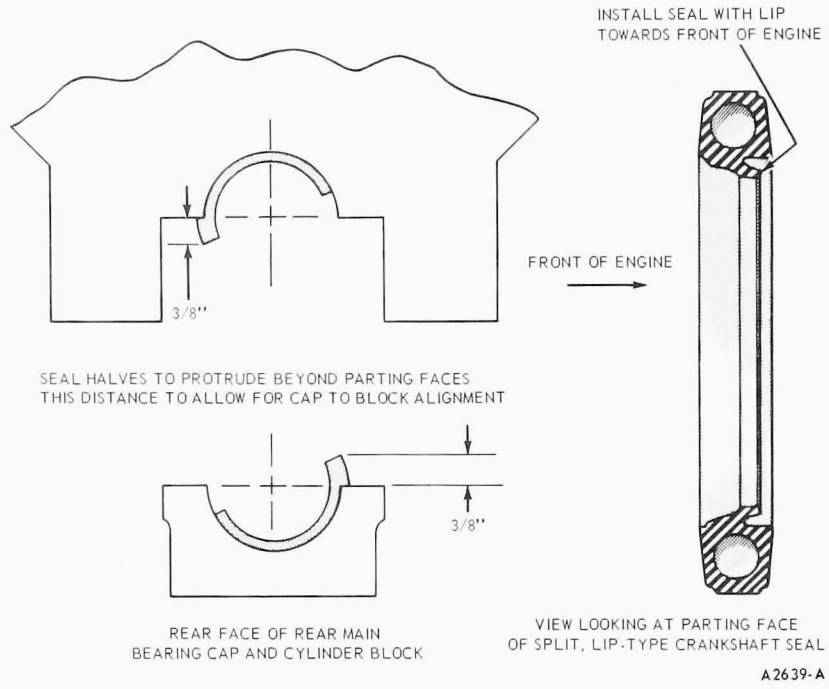

FIG. 34 Crankshaft Rear Oil Seal Installation

2. To install the upper main bearing, place the plain end of the bearing over the shaft on the locking tang side of the block and partially install the bearing so that tool 6331 can be inserted in the oil hole in the crankshaft. With tool 6331 positioned in the oil hole in the crankshaft, rotate the crankshaft in the opposite direction of engine rotation until the bearing seats itself. Remove the tool.
3. Install the bearing cap.
4. Select fit the bearing for proper clearance, following the procedures under Fitting Main and Connecting Rod Bearings in Part 21-01.
5. If the bearing is being replaced on journal number 1, 2 or 4, apply a coat of heavy engine oil SE to the journal and bearings and install the bearing cap. Tighten the cap bolts to specifications.
6. If the rear main bearing is to be replaced, remove the rear main oil seal retaining pin from the bearing cap seal groove. The pin is not used with the split, lip-type seal.

Clean the oil seal groove with a brush and solvent.

7. Install the lower seal in the rear main bearing cap with the undercut side of the seal toward the FRONT of the engine (Fig. 34). Allow the seal to protrude approximately 3/8 inch above the parting surface to mate with the upper seal when the cap is installed.

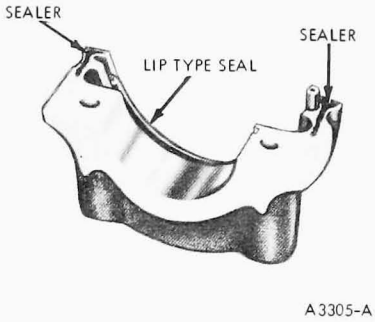

FIG. 35 Sealer on Rear Main Bearing Cap

8. Apply a thin coating of oil-resistant sealer to the rear main bearing cap at the rear of the top mating surface (Fig. 35). **Do not apply sealer to the area forward of the oil slinger groove.** Lubricate the journal with heavy engine oil SE and install the rear main bearing cap. Tighten the cap bolts to specifications.
9. If the thrust bearing cap (No. 3 main bearing) has been removed, install it as follows:

Lubricate the journal with heavy engine oil SE and install the thrust bearing cap with the bolts finger tight. Pry the crankshaft forward against the thrust surface of the upper half of the bearing. Hold the crankshaft cap to the rear. This will align the thrust surfaces

of both halves of the bearing. Retain the forward pressure on the crankshaft. Tighten the cap bolts to specifications (Fig. 36).

10. Clean the oil pump inlet tube screen. Prime the oil pump by filling the inlet opening with oil and rotating the pump shaft until oil emerges from the outlet opening. Install the oil pump and inlet tube assembly.
11. Position the oil pan gaskets on the oil pan. Position the oil pan front seal on the cylinder front cover. Position the oil pan rear seal on the rear main bearing cap. Install the oil pan and related parts, following the procedure under Oil Pan Installation in this section. Install the oil level dipstick.
12. Fill the crankcase. Start the engine and check for oil pressure. Operate the engine at fast idle and check for oil leaks.

CONNECTING ROD BEARINGS

The connecting rod bearings are selective fit. Refer to the procedures under Fitting Main and Connecting Rod Bearings in Part 21-01.

Removal

1. Drain the crankcase. Remove the oil level dipstick. Remove the oil pan and related parts, following the procedure under Oil Pan Removal.
2. Remove the oil pump inlet tube assembly and the oil pump.
3. Turn the crankshaft until the connecting rod to which new bearings are to be fitted is down. Remove the connecting rod cap. Remove the bearing inserts from the rod and cap.

Installation

1. Be sure the bearing inserts and the bearing bore in the connecting rod and cap are clean. Foreign material under the inserts will distort the bearing and cause a failure.
2. Clean the crankshaft journal.
3. Install the bearing inserts in the connecting rod and cap with the tangs fitting in the slots provided.
4. Pull the connecting rod assembly down firmly on the crankshaft journal.
5. Select fit the bearing, following procedures under Fitting Main and Connecting Rod Bearings in Part 21-01.
6. After the bearing has been fitted, clean and apply a coat of heavy engine oil SE to the journal and bearings. Install the connecting rod cap. Tighten the nuts to specifications.
7. Repeat the procedure for the remaining connecting rods that require new bearings.
8. Clean the oil pump inlet tube screen. Prime the oil pump by filling the inlet opening with oil and rotating the pump shaft until oil emerges from the outlet opening. Install the oil pump and inlet tube assembly.
9. Position the oil pan gaskets on the oil pan. Position the oil pan front seal on the cylinder front cover. Position the oil pan rear seal on the rear main bearing cap. Install the oil pan and related parts, following the procedure under Oil Pan Installation in this section. Install the oil level dipstick.
10. Fill the crankcase. Start the engine and check for oil pressure. Operate the engine at fast idle and check for oil leaks.

PISTONS AND CONNECTING RODS

Removal

1. Drain the cooling system and the crankcase. Remove the intake manifold, cylinder heads, oil pan and oil pump, following the procedures in this section.
2. Remove any ridges and/or deposits from the upper end of the cylinder bores as follows:

Turn the crankshaft until the piston to be removed is at the bottom of its travel, then place a cloth on the piston head to collect the cuttings. Remove the cylinder ridge with a ridge cutter. Follow the instructions furnished by the tool manufacturers. **Never cut into the ring travel area in excess of 1/32 inch when removing ridges.**

3. Make sure all connecting rod caps are marked so that they can be installed in their original positions.
4. Turn the crankshaft until the connecting rod being removed is down.
5. Remove the connecting rod nuts and cap.
6. Push the connecting rod and piston assembly out the top of the cylinder with the handle end of a hammer. **Avoid damage to the crankshaft journal or the cylinder wall when removing the piston and rod.**
7. Remove the bearing inserts from the connecting rod and cap.
8. Install the cap on the connecting rod from which it was removed.

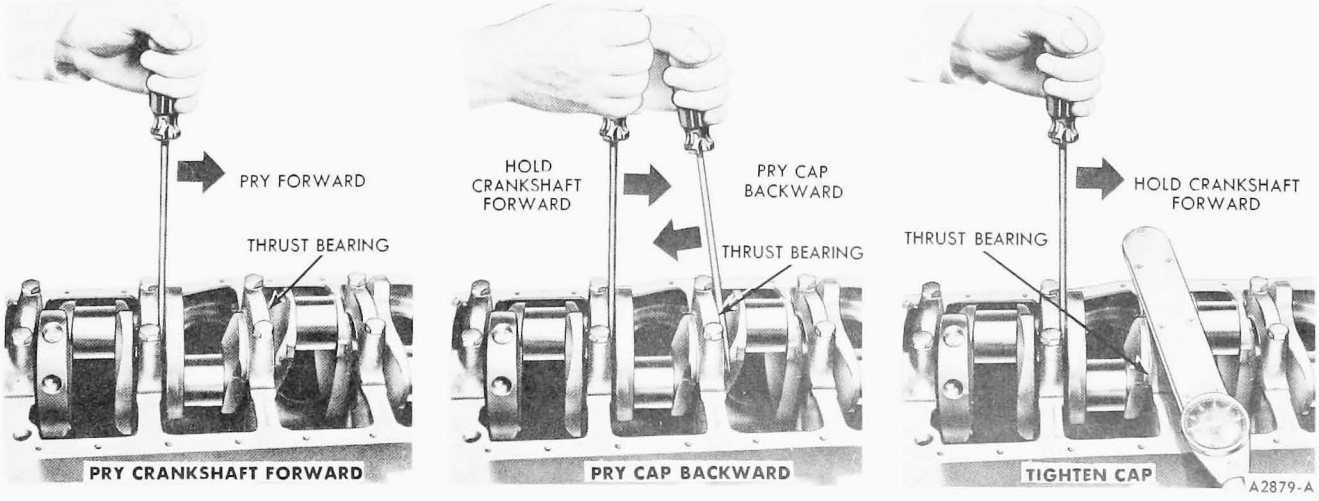

FIG. 36 Aligning Thrust Bearing

Installation

1. If new piston rings are to be installed, remove the cylinder wall glaze. Follow the instructions of the tool manufacturer.
2. Oil the piston rings, pistons and cylinder walls with heavy engine oil. **Be sure to install the pistons in the same cylinders from which they were removed or to which they were fitted. The connecting rod and bearing caps are numbered from 1 to 4 in the right bank and from 5 to 8 in the left bank, beginning at the front of the engine. The numbers on the connecting rod and bearing cap must be on the same side when installed in the cylinder bore. If a connecting rod is ever transferred from one block or cylinder to another, new bearings should be fitted and the connecting rod should be numbered to correspond with the new cylinder number.**

When installing the piston and connecting rod assembly, the largest chamfer at the bearing end of the rod should be positioned towards the crank pin thrust face of the crankshaft.

3. Make sure the ring gaps are properly spaced around the circumference of the piston (Fig. 37).
4. Install a piston ring compressor on the piston and push the piston in with a hammer handle until it is slightly below the top of the cylinder (Fig. 38). Be sure to guide the connecting rods to avoid damaging the crankshaft journals. **Install the piston with the indentation notch in the piston head toward the front of the engine.**
5. Check the clearance of each bearing, following the procedure under Fitting Main and Connecting Rod Bearings in Part 21-01.
6. After the bearings have been fitted, apply a light coat of engine oil to the journals and bearings.
7. Turn the crankshaft throw to the bottom of its stroke. Push the piston all the way down until the connecting rod bearing seats on the crankshaft journal.
8. Install the connecting rod cap. Tighten the nuts to specifications.
9. After the piston and connecting rod assemblies have been installed, check the side clearance between the connecting rods on each shaft journal (Fig. 39).

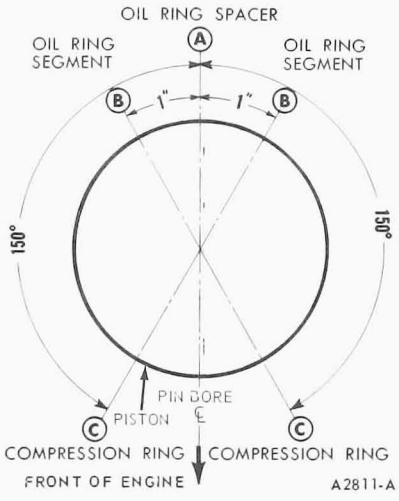

FIG. 37 Piston Ring Spacing

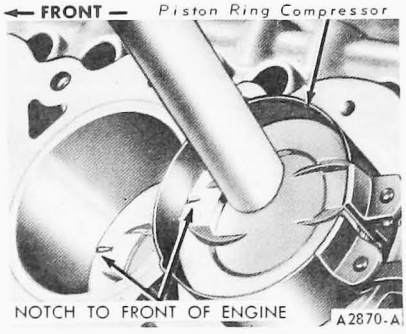

FIG. 38 Installing Piston

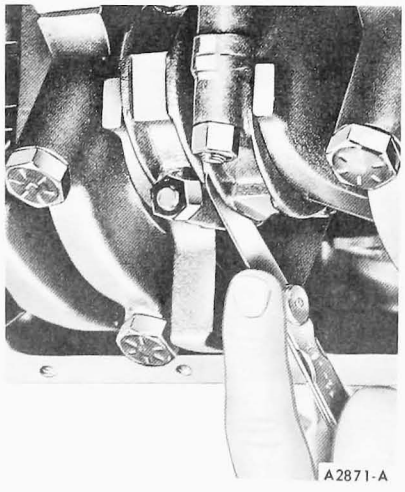

FIG. 39 Checking Connecting Rod Side Clearance

10. Disassemble, clean, and assemble the oil pump. Clean the oil pump inlet tube screen and the oil pan and block gasket surfaces.
11. Prime the oil pump by filling the inlet port with engine oil and rotating the pump shaft to distribute the oil within the housing. Install the oil pump and the oil pan, following the procedures under Oil Pan Installation in this section.
12. Install the cylinder heads, following the steps under Cylinder Head Installation.
13. Install the intake manifold, following the steps under Intake Manifold Installation.
14. Fill and bleed the cooling system. Fill the crankcase with the proper grade and quantity of engine oil.
15. Start the engine, then check and adjust the ignition timing. Connect the distributor vacuum hoses to the distributor.
16. Operate the engine at fast idle and check for oil and coolant leaks. Operate the engine until engine temperatures have stabilized, then adjust the engine idle speed and idle fuel mixture.
17. Install the air cleaner and intake duct assembly, including the crankcase ventilation hose.

CRANKSHAFT

The crankshaft and related parts are shown in Fig. 40.

Removal

1. Disconnect the spark plug wires at the spark plugs by hand only and remove the wires from the ignition harness brackets on the valve rocker arm covers. Disconnect the coil to distributor high-tension lead at the coil. Remove the distributor cap and spark plug wires as an assembly. Remove the spark plugs to allow easy rotation of the crankshaft.
2. Remove the fuel pump and oil filter. Slide the water pump by-pass hose clamp toward the water pump. Remove the alternator and mounting brackets.
3. Remove the crankshaft pulley from the crankshaft vibration damper. Remove the capscrew and washer from the end of the crankshaft. Install the puller on the crankshaft vibration damper (Figs. 20 and 21) and remove the damper.

4. Remove the cylinder front cover and water pump as an assembly.
5. Remove the crankshaft front oil slinger. Check the timing chain deflection, then remove the timing chain and sprockets by following steps under Cylinder Front Cover and Timing Chain Removal.
6. Invert the engine on the work stand. Remove the clutch pressure plate and disc (manual-shift transmission). Remove the flywheel and engine rear cover plate. Remove the oil pan and gasket. Remove the oil pump.
7. **Make sure all bearing caps (main and connecting rod) are marked so that they can be installed in their original locations.** Turn the crankshaft until the connecting rod from which the cap is being removed is down, and remove the bearing cap. Push the connecting rod and piston assembly up into the cylinder. Repeat this procedure until all the connecting rod bearing caps are removed.
8. Remove the main bearing caps.
9. Carefully lift the crankshaft out of the block so that the thrust bearing surfaces are not damaged. **Handle the crankshaft with care to avoid possible fracture or damage to the finished surfaces.**

To refinish journals, dress minor imperfections, etc., refer to Part 21-01.

Installation

1. Remove rear journal oil seal from the block and rear main bearing cap.
2. Remove the main bearing inserts from the block and bearing caps.
3. Remove the connecting rod bearing inserts from the connecting rods and caps.
4. If the crankshaft main bearing journals have been refinished to a definite undersize, install the correct undersize bearings. Be sure the bearing inserts and bearing bores are clean. Foreign material under the inserts will distort the bearing and cause a failure.
5. Place the upper main bearing inserts in position in bores with the tang fitting in the slot provided.
6. Install the lower main bearing inserts in the bearing caps.
7. Clean the rear journal oil seal groove and the mating surfaces of the block and rear main bearing cap. Remove the rear oil seal retainer pin from the rear main bearing cap seal groove. The pin is not used with the split, lip-type seal.
8. Dip the lip-type seal halves in clean engine oil. Install the seals in the bearing cap and block with the undercut side of the seal toward the FRONT of the engine as shown in Fig. 34.
9. Carefully lower the crankshaft into place. **Be careful not to damage the bearing surfaces.**
10. Check the clearance of each main bearing by following the procedure under Fitting Main and Connecting Rod Bearings in Part 21-01.
11. After the bearings have been fitted, apply a thin coating of oil-resistant sealer to the rear main bearing cap at the rear of the top mating surface (Fig. 35). **Do not apply sealer to the area forward of the oil slinger groove.**
12. Apply heavy engine oil SE to the journals and bearings.
13. Install all the bearing caps, except the thrust bearing cap (No. 3 bearing). **Be sure that the main bearing caps are installed in their original locations.** Tighten the bearing cap bolts to specifications.
14. Install the thrust bearing cap with the bolts finger-tight.
15. Pry the crankshaft forward against the thrust surface of the upper half of the bearing (Fig. 36).
16. Hold the crankshaft forward and pry the thrust bearing cap to the rear (Fig. 36). This will align the thrust surfaces of both halves of the bearing.
17. Retain the forward pressure on the crankshaft. Tighten the cap bolts to specification (Fig. 36).
18. Force the crankshaft toward the rear of the engine.
19. Check the crankshaft end play (Refer to Part 21-01).
20. Install new bearing inserts in the connecting rods and caps. Check the clearance of each bearing, following the procedure under Fitting Main and Connecting Rod Bearings in Part 21-01.
21. After the connecting rod bearings have been fitted, apply a light coat of engine oil SE to the journals and bearings.
22. Turn the crankshaft throw to the bottom of its stroke. Push the piston all the way down until the rod bearing seats on the crankshaft journal.
23. Install the connecting rod cap. Tighten the nuts to specifications.
24. After the piston and connecting rod assemblies have been installed, check the side clearance between the connecting rods on each connecting rod crankshaft journal (Fig. 39).
25. Install the timing chain and sprockets, cylinder front cover and crankshaft pulley and adapter, following steps under Cylinder Front Cover and Timing Chain Installation.
26. Coat the threads of the flywheel

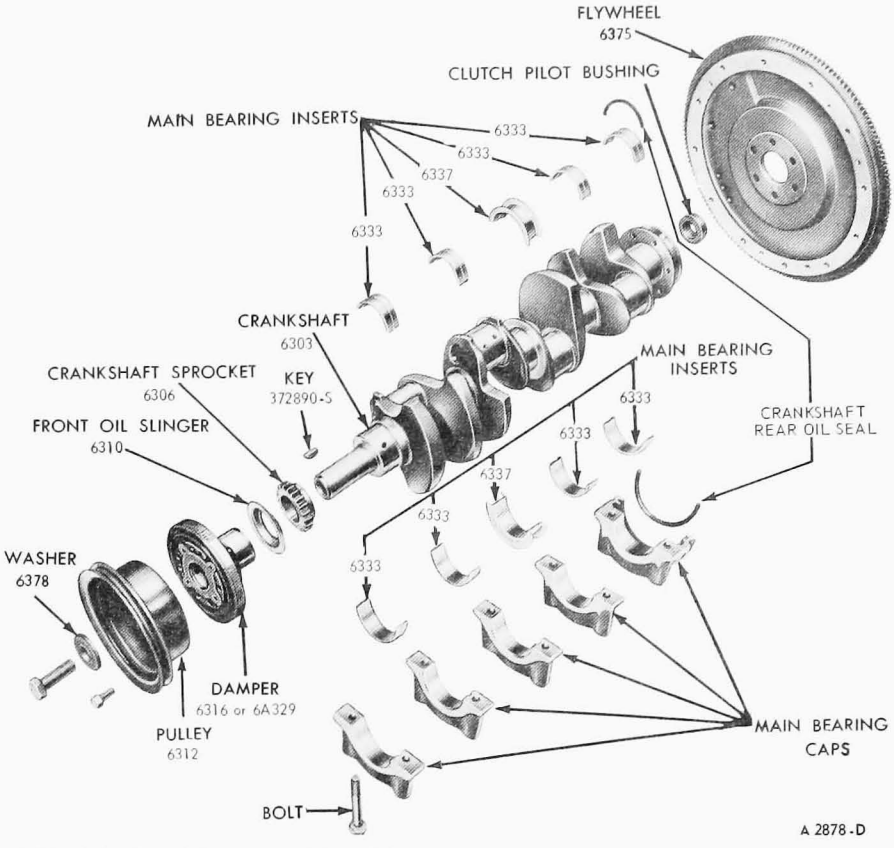

FIG. 40 Crankshaft and Related Parts

attaching bolts with oil-resistant sealer. Position the flywheel on the crankshaft flange. Install and tighten the bolts to specifications.

On a flywheel for manual-shift transmission, use Tool 6392-N to locate the clutch disc. Install the pressure plate. Tighten the attaching bolts.

27. Clean the oil pan, oil pump and oil pump screen. Prime the oil pump by filling the inlet port with engine oil and rotating the pump shaft to distribute oil within the housing. Install the oil pump and oil pan by following the procedures under Oil Pan and Oil Pump Installation.
28. Install the oil filter, fuel pump and connect the fuel lines. Install the alternator, shield and mounting bracket.
29. Install the spark plugs, distributor cap and spark plug wires. Connect the spark plug wires and high-tension lead.
30. Install the engine in the vehicle.

CAMSHAFT BEARINGS

Camshaft bearings are available pre-finished to size for standard and 0.015 inch undersize journal diameters. The bearings are not interchangeable from one bore to another.

Removal

1. Remove the camshaft, flywheel and crankshaft, following the appropriate procedures. Push the pistons to the top of the cylinders.
2. Remove the camshaft rear bearing bore plug as detailed in Part 21-01. Remove the camshaft bearings (Fig. 41).
3. Select the proper size expanding collet and back-up nut and assemble on the expanding mandrel. With the expanding collet collapsed, install the collet assembly in the camshaft bearing, and tighten the back-up nut on the expanding mandrel until the collet fits the camshaft bearing.
4. Assemble the puller screw and extension (if necessary) as shown and install on the expanding mandrel. Wrap a cloth around the threads of the puller screw to protect the front bearing or journal. Tighten the pulling nut against the thrust bearing and pulling plate to remove the camshaft bearing. Be sure to hold a wrench on the end of the puller screw to prevent it from turning.
5. Repeat the procedure for each bearing. To remove the front bearing, install the puller screw from the rear of the cylinder block.

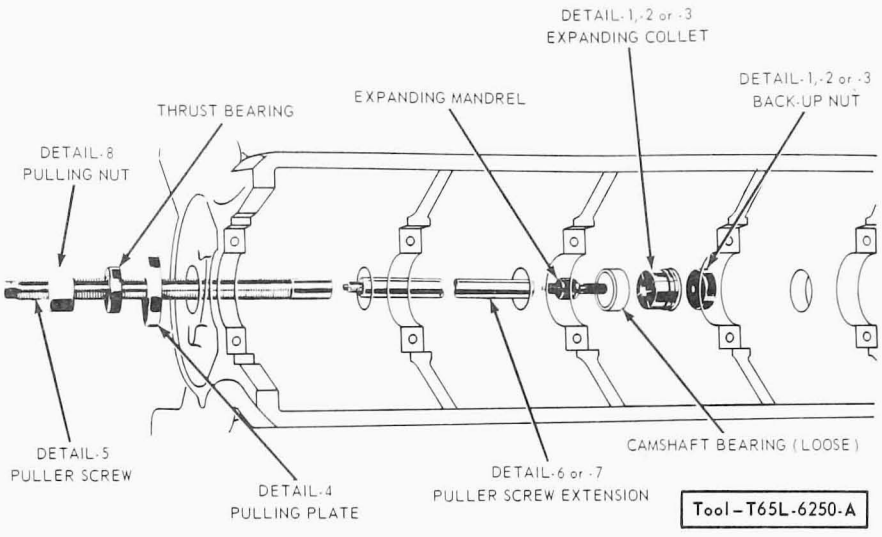

FIG. 41 Camshaft Bearing Replacement

Installation

1. Position the new bearings at the bearing bores with the oil holes aligned and press them in place with the tool shown in Fig. 41. Be sure to center the pulling plate and puller screw to avoid damage to the bearing. **Failure to use the correct expanding collet can cause severe bearing damage. Be sure the front bearing is installed the specified distance below the front face of the cylinder block (Fig. 42).**
2. Install a new rear bearing bore plug.
3. Install the camshaft, crankshaft, flywheel and related parts, following the appropriate procedures, except do not check connecting rod and main bearing clearances as a part of Camshaft Bearing Replacement. Install the engine in the vehicle.

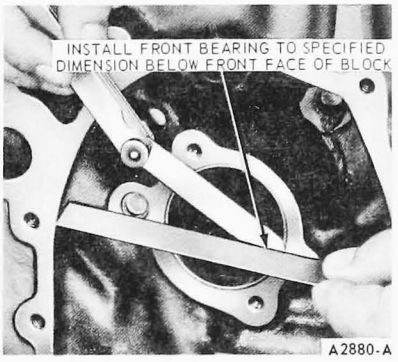

FIG. 42 Camshaft Front Bearing Replacement

OIL FILTER

The oil filter assembly is shown in Fig. 43.

Removal

1. Position a drip pan under the oil filter.
2. Unscrew the filter from the adpater fitting and clean the adapter fitting.

On Econolines equipped with power steering, be sure the wheels are fully to the right before removing the filter. Then unscrew the filter from the adapter fitting, turn it horizontal and let the excess oil drain off. Slide the oil filter towards the rear of the vehicle and remove as shown in Fig. 36. Some effort may be required to slide the oil filter between the engine crossmember and power steering hoses.

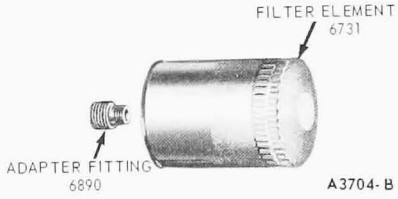

FIG. 43 Oil Filter Assembly

Installation

1. Coat the gasket on a new filter with oil. Place the new filter in position on the adapter fitting.

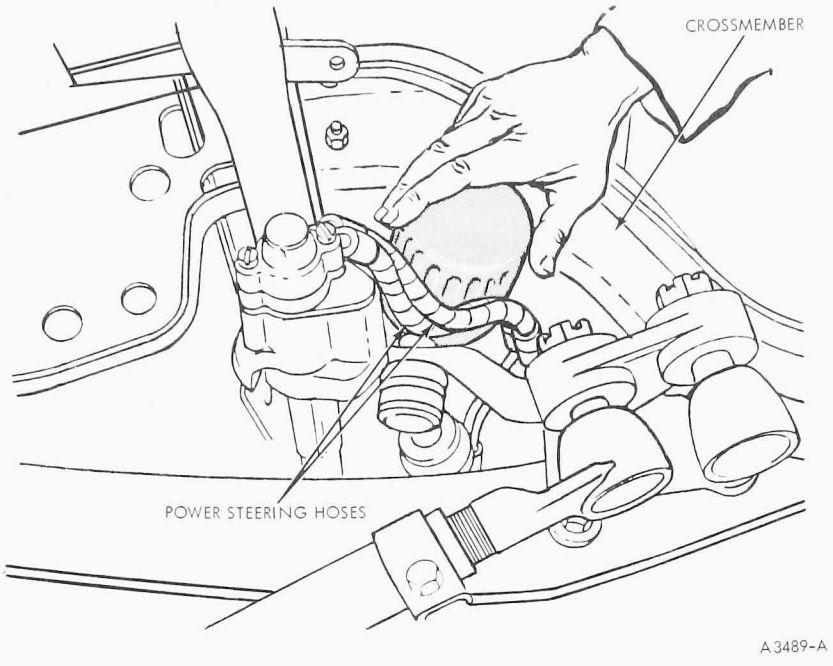

FIG. 44 Oil Filter Replacement—Econoline with Power Steering

On Econolines equipped with power steering, make sure that the wheels are turned fully to the right, then slide the oil filter between the crossmember and power steering hoses (Fig. 44) to position it on the adpater fitting.

2. Hand tighten the filter until the gasket makes contact and then advance it 1/2 turn.
3. Operate the engine at fast idle and check for oil leaks. If oil leaks are evident, perform the necessary repairs to correct the leakage. Remove the drip pan.
4. Check the oil level and fill the crankcase as necessary.

DISASSEMBLY AND ASSEMBLY

When installing nuts or bolts that must be tightened (Refer to torque specifications), oil the threads with light-weight engine oil. **Do not oil threads that require oil-resistant or water-resistant sealer.**

Refer to part 21-01 for the cleaning and inpsection procedures.

ENGINE ASSEMBLY

Disassembly

1. Install the engine on the work stand.
2. Remove the distributor cap, coil high-tension wire and spark plug wires as an assembly.
3. Remove the distributor vacuum hoses from the distributor. Remove the carburetor fuel inlet line. Remove the fuel pump outlet line and fuel filter. Remove the pump vacuum lines (Bronco only). Remove the fuel pump and discard the gasket. Remove the oil filter.
4. Slide the clamp on the water pump by-pass hose toward the water pump.
5. Remove the valve rocker arm covers and the crankcase ventilating system.
6. Remove the alternator mounting brackets. Remove the ignition coil. Remove the distributor hold-down bolt and remove the distributor.
7. Remove the intake manifold attaching bolts. Raise the manifold and carefully remove it from the engine. Discard the intake manifold gaskets and seals.
8. Loosen the valve rocker arm stud not so that the valve rocker arms can be rotated to the side. Remove the valve push rods in sequence and put them in a rack or holder so that they can be installed in their original position.
9. Remove the valve lifters and place them in a rack so that they can be installed in their original bores (Fig. 19).

The internal parts of each hydraulic valve lifter assembly are matched sets. Do not intermix the parts. Keep the assemblies intact until they are to be cleaned.

10. Remove the exhaust manifolds and the spark plug.
11. Install the cylinder head holding fixtures (Fig. 15). Remove the cylinder head bolts and lift the cylinder heads off the block. Discard the cylinder head gaskets.
12. Remove the crankshaft pulley from the crankshaft vibration damper. Remove the capscrew and washer from the end of the crankshaft. Install the pulley on the crankshaft vibration damper (Figs. 20 and 21) and remove the vibration damper.
13. Remove the oil pan-to-cylinder front cover attaching bolts. Remove the cylinder front cover attaching bolts. Remove the cylinder front cover and water pump as an assembly. Discard the gasket and remove the crankshaft front oil slinger.
14. Check the timing chain deflection and remove the timing chain and sprockets by following steps under Cylinder Front Cover and Timing Chain Removal. Remove the crankshaft sprocket key.
15. Remove any ridge and/or carbon deposits from the upper end of the cylinder bores. Move the piston to the bottom of its travel and place a cloth on the piston head to collect the cuttings. Remove the cylinder ridge with a ridge cutter. Follow the instructions furnished by the tool manufacturer. **Never cut into the ring travel area in excess of 1/32 inch when removing ridges.** After the ridge has been removed, remove the cutter from the cylinder bore.
16. On a flywheel for a manual-shift transmission, remove the clutch pressure plate and disc.
17. Remove the flywheel and rear cover

plate. Remove the clutch pilot bushing (Fig. 29).

18. Invert the engine. Remove the oil pan and discard the gaskets and seals.
19. Remove the oil pump and inlet tube as an assembly. Remove the intermediate drive shaft. Discard the oil pump gasket.
20. **Make sure all connecting rods and caps are marked so that they can be installed in their original locations. Turn the crankshaft until the connecting rod being removed is down. Remove the rod cap.**
21. Push the connecting rod and piston assembly out the top of the cylinder with the handle end of a hammer. **Avoid damage to the connecting rod journal or the cylinder wall when removing the piston and rod.**
22. Remove the bearing inserts from the connecting rods and caps. Install the rod caps on the connecting rods from which they were removed.
23. Remove the main bearing caps.
24. Carefully lift the crankshaft out of the cylinder block so that the thrust bearing surfaces are not damaged. **Handle the crankshaft with care to avoid possible fracture or damage to the finished surfaces.**
25. Remove the rear journal oil seal from the block and rear bearing cap.
26. Remove the main bearing inserts from the block and bearing caps. Install the main bearing caps in their original positions.
27. Remove the camshaft thrust plate. Carefully remove the camshaft by pulling it toward the front of the engine. Use caution to avoid damaging the journals and lobes.
28. Remove the camshaft rear bearing bore plug. Remove the camshaft bearings (Fig. 41).

Assembly

If the cylinder block is to be replaced, transfer the cylinder head dowels and cylinder block drain plugs to the new cylinder block and start the assembly procedures with step number 5.

1. If the original cylinder block is used, remove the glaze from the cylinder bores by following the instructions in Part 21-01.
2. Invert the engine on the work stand.
3. Position the new camshaft bearings at the bearing bores with the oil holes aligned and press them in place with the tool shown in Fig. 41. **Be sure the camshaft front bearing is installed the specified distance below the front face of the cylinder block (Fig. 42).**
4. Clean out the camshaft rear bearing bore plug recess thoroughly. Install the new bore plug as detailed in Part 21-01.
5. Oil the camshaft journals with heavy engine oil SE and apply Lubriplate or equivalent to all lobes, and then carefully slide it through the bearings. Install the camshaft thrust plate, with groove towards engine block, and then check camshaft end play as shown in Part 21-01.
6. Clean the rear journal oil seal groove and the mating surfaces of the block and rear main bearing cap. Remove the rear oil seal retainer pin from the rear main bearing cap seal groove. The pin is not used with the split, lip-type seal.
7. Dip the seal halves in clean engine oil SE. Install the seals in the bearing cap and block with the undercut side of the seal toward the FRONT of the engine as shown in Fig. 34.
8. If the crankshaft main bearing journals have been refinished to a definite undersize, install the correct undersize bearings. Be sure the bearing inserts and bearing bores are clean. Foreign material under the inserts will distort the bearing and cause a failure.

Place the upper main bearing inserts in position in the bore with the tang fitting in the slot provided.

9. Install the lower main bearing inserts in the bearing caps.
10. Carefully lower the crankshaft into place. **Be careful not to damage the bearing surfaces.**
11. Check the clearance of each main bearing, following the procedure under Fitting Main and Connecting Rod Bearings in Part 21-01.
12. After bearings have been fitted, apply a coat of heavy engine oil SE to the journals and bearings.
13. Apply a thin coating of oil-resistant sealer to the rear main bearing cap at the rear of the top mating surface (Fig. 35). **Do not apply sealer to the area forward of the oil slinger grooves.** Install the rear main bearing cap and the remainder of the caps, except the thrust bearing cap (No. 3 bearing). **Be sure that the main bearing caps are installed in the original positions.** Tighten the bearing cap bolts to specifications.
14. Install the thrust bearing cap and check crankshaft end play by following steps under Crankshaft Installation.
15. Turn the engine on the work stand so that the front end is up.
16. Install the pistons and connecting rods by following steps under Piston and Connecting Rod Installation.
17. Position the sprockets and timing chain on the camshaft and crankshaft (Fig. 23). Be sure the timing marks on the sprockets are positioned as shown in Fig. 22.
18. Lubricate the timing chain and sprockets with heavy engine oil SE.
19. Install the fuel pump eccentric, washer and camshaft sprocket capscrew. Tighten the sprocket capscrew to specifications. Apply heavy engine oil SE to the fuel pump eccentric. Install the crankshaft front oil slinger (Fig. 24).
20. Clean the cylinder front cover and the cylinder block gasket surfaces. Install a new crankshaft front oil seal (Fig. 27).
21. Coat the gasket surface of the block and cover and the cover bolt threads with oil-resistant sealer. Position a new gasket on the block.
22. Install the alignment pilot tool on the cylinder front cover so that the key in the pilot aligns with the key in the crankshaft. Position the cover (and water pump) and pilot over the end of the crankshaft and against the block (Fig. 25).
23. Install the cylinder front cover screw finger tight. While pushing in on the pilot, tighten the cover bolts to specifications. Remove the pilot.
24. Lubricate the crankshaft with a white lead and oil mixture and apply Lubriplate or equivalent to the oil seal rubbing surface of the vibration damper inner hub to prevent damage to the oil seal.
25. Line up the crankshaft vibration damper keyway with the key on the crankshaft, and then install the vibration damper on the crankshaft (Fig. 26). Install the damper capscrew and washer, then tighten the screw to specifications. Install the crankshaft pulley (power steering only).
26. Invert the engine on the work stand. Position the intermediate drive shaft into the distributor socket. With the shaft firmly seated in the distributor socket, the stop on the shaft should touch the roof of the crankcase. Remove the shaft and position the stop as necessary.
27. With the stop properly positioned, insert the intermediate drive shaft into the oil pump.
28. Prime the oil pump by filling the inlet port with engine oil. Rotate the pump shaft to distribute the oil within the pump body.
29. Position a new gasket on the pump housing and install the pump and shaft as an assembly. **Do not attempt to force the pump into position if it will not seat readily. The drive shaft hex may be misaligned with the distributor shaft. To align, rotate**

the intermediate shaft into a new position. Tighten the oil pump attaching bolt to specifications.

30. Clean the gasket surfaces of the block and oil pan. Coat the block surface and the oil pan gasket surface with sealer. Position new gaskets on the block and position a new seal on the cylinder front cover and rear main bearing cap. Make sure the tabs on the seal are over the oil pan gasket. Install the attaching bolts and tighten them from the center outwards to specifications (one screw secures the fuel line bracket).
31. Lubricate the fuel pump lever with heavy engine oil SE. Using a new gasket, install the fuel pump. Tighten the bolts alternately and evenly to specifications.
32. Turn the engine on the work stand so that the top of the engine is up.
33. Clean the cylinder head and block gasket surfaces. On the 302 V-8 engines, a specially treated composition gasket is used. **Do not apply sealer to a composition gasket. Install the head gaskets over the cylinder head dowels.**
34. Place the cylinder heads on the engine, then remove the holding fixtures. Oil the head bolt threads with heavy engine oil SE, then install the bolts.
35. The cylinder head bolt tightening procedure is performed in three progressive steps. Tighten the bolts in sequence (Fig. 16) to specifications.
36. Coat the cylinder head mating surfaces of the exhaust manifold with a light film of graphite grease.
37. Position the exhaust manifolds on the cylinder heads and install the attaching bolts and flat washers. Tighten the bolts to specifications, working from the center to the ends.
38. Install the spark plugs.
39. Use the hydraulic valve lifter leakdown tester (Part 21-01) to fill the lifters with test fluid. Lubricate the lifters and bores with heavy engine oil and install each lifter in the bore from which it was removed.
40. Lubricate the ends of the push rods with Lubriplate or equivalent and install the push rods in their original positions. Apply Lubriplate or equivalent over the valve stem tips. Lubricate the rocker arms and fulcrum seats with Lubriplate or equivalent and install the rocker arms over the push rods. Perform a valve clearance adjustment.
41. Clean the mating surfaces of the intake manifold, cylinder heads and cylinder block.
42. Coat the intake manifold and cylinder block seal surfaces with quick-setting adhesive.
43. Position new seals on the cylinder block and new gaskets on the cylinder heads with the gaskets interlocked with the seal tabs. Apply nonhardening sealer at the four junction points of the seals and gaskets. Be sure the holes in the gaskets are aligned with the holes in the cylinder heads.
44. Carefully lower the intake manifold on the cylinder block and cylinder heads. **After the intake manifold is in place, run a finger around the seal area to make sure the seals are in place. If the seals are not in place, remove the intake manifold and position the seals.**
45. Be sure the holes in the manifold gaskets and manifold are in alignment. Install the intake manifold attaching nuts and bolts. Tighten the intake manifold nuts and bolts in two steps (Fig. 13).

Tighten in sequence to specifications. **After completing the remaining assembly steps, operate the engine until it reaches normal operating temperature, then retighten the manifold nuts and bolts in sequence to specifications.**

46. Install the water pump by-pass hose on the coolant outlet housing. Slide the clamp into position and tighten the clamp.
47. Rotate the crankshaft until the No. 1 piston is on TDC after the compression stroke, then position the distributor in the block with the rotor at the No. 1 firing position and the points just start to open. Install the hold-down clamp.
48. Clean the valve rocker arm covers and the cylinder head gasket surface. Place the new gaskets in the covers making sure that the tabs of the gasket engage the notches provided in the cover.
49. Position the covers on the cylinder heads. Make sure the gasket seats evenly all around the head. Install the bolts. The cover is tightened in two steps. Tighten the bolts to specifications. Two minutes later, tighten the bolts to the same specifications.
50. Install the ignition coil. Position and install the alternator, shield and mounting brackets.
51. Install the crankcase ventilation system.
52. Install the distributor cap. Position the spark plug wires in the brackets on the valve rocker arm covers. Connect the spark plug wires and the coil wire.
53. Connect the carburetor fuel inlet line and fuel pump inlet line.
54. Install the oil filter adapter fitting. Clean the oil filter gasket surface. Coat the gasket on the filter with oil. Place the filter in position on the adapter fitting. Hand tighten the filter until the gasket contacts the adapter face; then, advance it 1/2 turn.
55. Install the clutch pilot service bearing (Fig. 30). Coat the threads of the flywheel attaching bolts with oil-resistant sealer. Position the rear cover plate on the block and the flywheel on the crankshaft flange. Install and tighten the bolts to specifications.

On a flywheel for a manual-shift transmission, use tool T58P-7563-A to locate the clutch disc. Install the pressure plate.

56. Install the engine in the vehicle. Fill and bleed the cooling system. Fill the crankcase with the proper grade and quantity of engine oil.
57. Operate the engine and check for oil and coolant leaks. Check and adjust the ignition timing. Connect the distributor vacuum hoses at the distributor. Retighten intake manifold bolts to specifications.
58. Adjust the engine idle speed, fuel mixture and anti-stall dashpot (if applicable). Adjust the transmission throttle linkage.

CYLINDER HEADS

Disassembly

1. Remove the exhaust manifolds and the spark plugs.
2. Clean the carbon out of the cylinder head combustion chambers before removing the valves.
3. Compress the valve spring (Fig. 45). Remove the spring retainer locks and release the spring.
4. Remove the spring retainer, sleeve, spring, stem seal and valve. Discard the valve stem seals. Identify all valve parts.
5. Clean, inspect and repair the cylinder head as required, or transfer all usable parts to a new cylinder head.

Assembly

1. Install each valve (Fig. 46) in the port from which it was removed or to which it was fitted. Install a new stem seal on the valve.

2. Install the valve spring over the valve, and then install the spring retainer and sleeve. Compress the spring (Fig. 45) and install the retainer locks (Fig. 46).
3. Measure the assembled height of the valve spring from the surface of the cylinder head spring pad to the underside of the spring retainer with dividers (Fig. 47). Check the dividers against a scale. If the assembled height is greater than specifications, install the necessary 0.030 inch thick spacer(s) between the cylinder head spring pad and the valve spring to bring the assembled height to the recommended height.

Do not install the spacers unless necessary. Use of spacers in excess of recommendations will result in overstressing the valve springs and overloading the camshaft lobes which could lead to spring breakage and worn camshaft lobes.

4. Install the exhaust manifolds and the spark plugs.

VALVE LIFTER

The internal parts of each hydraulic valve lifter assembly are matched sets. Do not intermix the parts. Keep the assemblies intact until they are to be cleaned.

The disassembly and assembly procedures for Types I and II valve lifters are different. Valve lifters should always be tested after assembly; refer to the test procedures covered in Part 21-01.

TYPE I

Disassembly

Disassemble and assemble each lifter separately. Keep the lifter assemblies in proper sequence so that they can be installed in their original bores.

1. Grasp the lock ring with needle nose pliers to release it from the groove. It may be necessary to depress the plunger to fully release the lock ring.
2. Remove the push rod cup, metering valve (disc), plunger and spring.
3. Remove the plunger assembly, the check valve and the check valve retainer and plunger spring. Carefully remove the plunger spring, the check valve retainer and, the check valve disc from the plunger.

Assembly

Type I hydraulic lifter assembly is shown in Fig. 48.

1. Place the plunger upside down on a clean work bench.
2. Place the check valve (disc or ball check) in position over the oil hole on the bottom of the plunger. Set the check valve spring on top of the check valve (disc or ball check).
3. Position the check valve retainer over the check valve and spring and push the retainer down into place on the plunger.
4. Place the plunger spring, and then the plunger (open end up) into the lifter body.
5. Position the metering valve (disc) in the plunger, and then place the push rod cup in the plunger.
6. Depress the plunger, and position the closed end of the lock ring in the groove of the lifter body. With the plunger still depressed, position the open ends of the lock ring in the groove. Release the plunger, and then depress it again to fully seat the lock ring.
7. Use the hydraulic valve lifter leakdown tester (Part 21-01) to fill the lifters with test fluid.

TYPE II

Disassembly

Each valve lifter is a matched assembly. If parts of one lifter are intermixed with those of another, improper valve operation may result. Disassemble and assemble each lifter separately. Keep the lifter assemblies in proper sequence so they can be installed in their original bores.

1. Grasp the lock ring with needle nose pliers to release it from the groove. It may be necessary to depress the plunger to fully release lock ring.
2. Remove the push rod cup.
3. Remove the plunger assembly, the check valve and the check valve retainer and plunger spring.

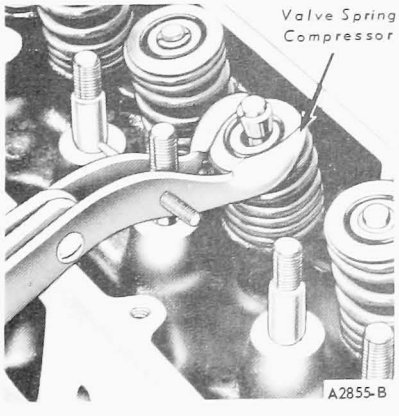

FIG. 45 Compressing Valve Spring On Bench

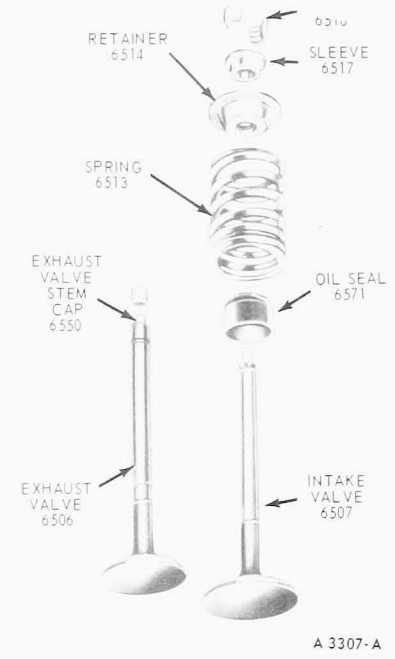

FIG. 46 Valve Assembly

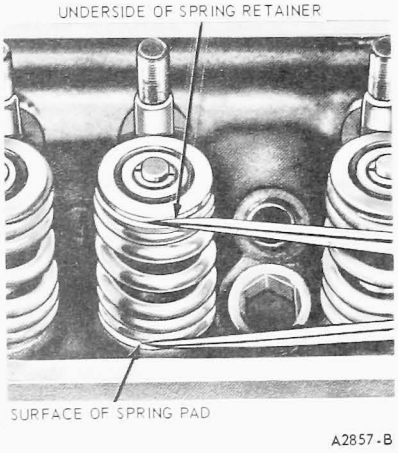

FIG. 47 Checking Valve Spring Assembled Height

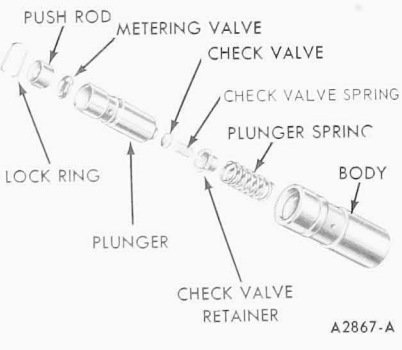

FIG.48 Type I Hydraulic Valve Lifter Assembly

Carefully remove the plunger spring, the check valve retainer and the check valve ball and spring from the plunger.

Assembly

Type II hydraulic lifter assembly is shown in Fig. 49.

1. Place the plunger on a clean work surface (table or bench) in an inverted position and center the check valve ball and spring on it. Carefully slide the check valve retainer over the ball and spring and down until it bottoms. **Use every precaution not to distort it in any way.** Place the plunger spring over the metering valve.
2. Leaving the assembly in the inverted position, slide the lifter body down over the spring until it slightly compresses the spring.
3. Position the combined assembly right side up on the work surface (table or bench).
4. Install the push rod cup. Depress the cup and install the lock ring.
5. Use the hydraulic valve lifter leakdown tester (Part 21-01) to fill the lifters with test fluid.

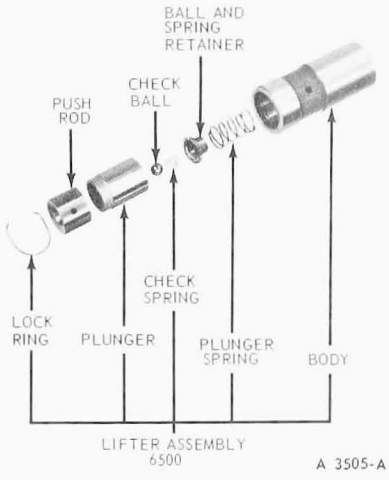

FIG. 49 Type II Hydraulic Valve Lifter Assembly

OIL PUMP

Disassembly

1. Remove the oil inlet tube from the oil pump and remove the gasket.
2. Remove the cover attaching bolts, then remove the cover. Remove the inner rotor and shaft assembly, then remove the outer race.
3. Drill a small hole and insert a self-threading sheet metal screw of the proper diameter into the oil pressure relief valve chamber cap and pull the cap out of the chamber. Remove the spring and plunger.

Assembly

The oil pump assembly is shown in Fig. 50.

1. Clean, inspect and oil all parts thoroughly.
2. Install the oil pressure relief valve plunger, spring and a new cap.
3. Install the outer race and the inner rotor and shaft assembly. **Be sure the dimple (identification mark) on the outer race is facing outward and on the same side as the identification mark on the rotor. The inner rotor and shaft and the outer race are serviced as an assembly. One part should not be replaced without replacing the other.** Install the cover and tighten the cover attaching bolts to specifications.
4. Position a new gasket and the oil inlet tube on the oil pump and install the attaching bolts.

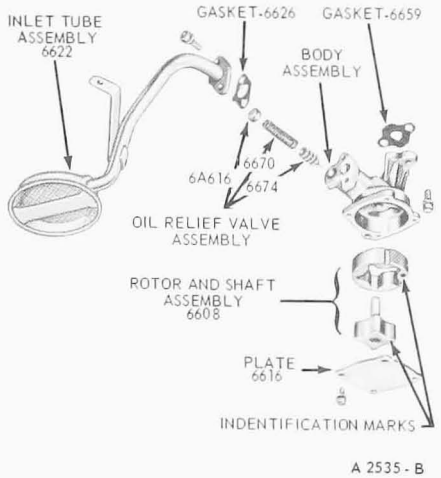

FIG. 50 Oil Pump—Disassembled

PISTONS AND CONNECTING RODS

Disassembly

1. Remove the bearing inserts from the connecting rod and cap.
2. Mark the pistons to assure assembly with the same rod and installation in the same cylinders from which they were removed.
3. Using an Arbor press and the tool shown in Fig. 51, press the piston pin from the piston and connecting rod. Remove the piston rings.

Assembly

The piston, connecting rod and related parts are shown in Fig. 52. Check the fit of a new piston in the cylinder bore before assembling the piston and piston pin to the connecting rod.

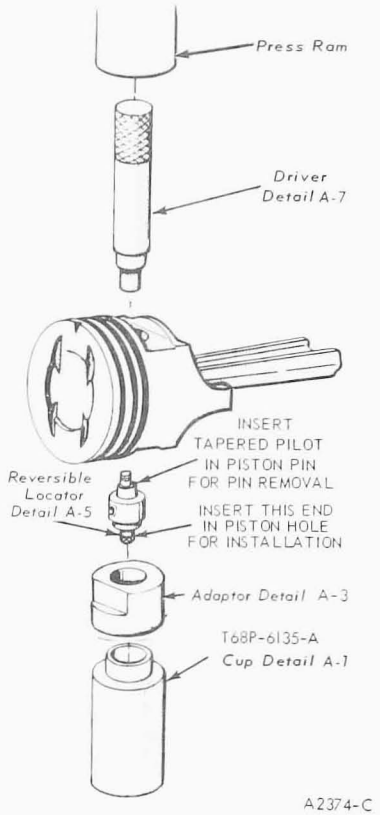

FIG. 51 Removing or Installing Piston Pin

The piston pin bore of a connecting rod and the diameter of the piston pin must be within specifications.

1. Apply a light coat of engine oil SE to all parts. **Assemble the piston to the connecting rod with the indentation in the piston positioned as shown in Fig. 53.**

On replacement connecting rods, install the large-chamfered side of the connecting rod bearing bore towards the crankshaft cheek; facing towards front of engine on the right bank rods, and facing towards rear of engine on left bank rods.

2. Start the piston pin in the piston and connecting rod (this may require a very light tap with a mallet). Using an Arbor Press, press the piston pin through the piston and connecting rod until the pin is centered in the piston (Fig. 51).
3. Check the end gap of all piston rings (Part 21-01). It must be within specifications. Follow the instructions contained on the piston ring package and install the piston rings.
4. Check the ring side clearance of the compression rings with a feeler gauge inserted between the ring and its lower land (Part 21-01). The gauge should slide freely around the

entire ring circumference without binding. Any wear that occurs will form a step at the inner portion of the lower land. **If the lower lands have high steps, the piston should be replaced.**

5. Be sure the bearing inserts and the bearing bore in the connecting rod and cap are clean. Foreign material under the inserts will distort the bearing and cause a failure. Install the bearing inserts in the connecting rod and cap with the tangs fitting in the slots provided.

CYLINDER ASSEMBLY

Disassembly

Follow steps 1 thru 9, 11 thru 13, and 16 thru 19 under Engine Disassembly. Remove the four cylinder head dowels from the cylinder block. Remove the cylinder block drain plugs, and remove the cylinder assembly from the work stand.

Assembly

Clean the gasket and seal surfaces of all parts and assemblies.

Install the replacement cylinder block assembly on a work stand. Install the cylinder block drain plugs and cylinder head dowels. Transfer all parts removed from the old cylinder assembly to the new cylinder assembly, following the procedures in steps 20 through 35 and 38 through 55 under Engine Assembly. Check all assembly clearances and correct as necessary.

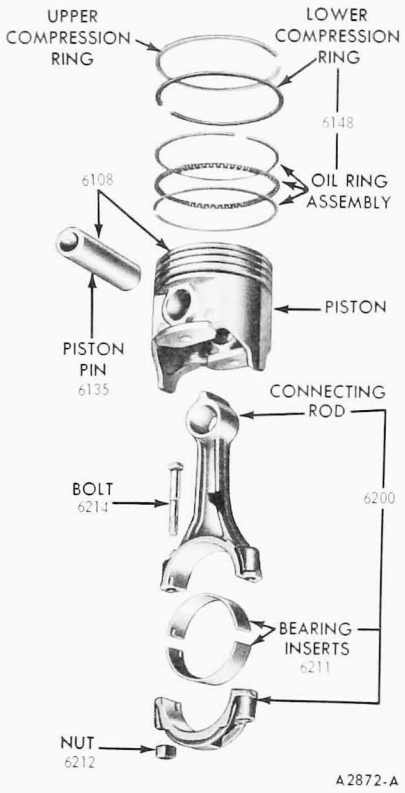

FIG. 52 Piston, Connecting Rod and Related Parts

CYLINDER BLOCK

Before replacing a cylinder block, determine if it is repairable, and make the necessary repairs following the procedures in Part 21-01.

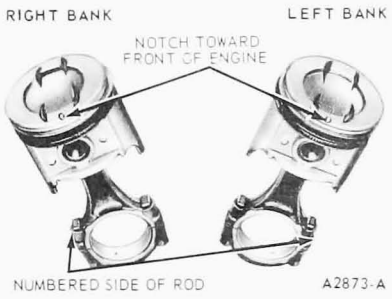

FIG. 53 Correct Piston and Rod Positions

Disassembly

Follow steps 1 through 9, 11 through 14, 16 through 24, 27 and 28 under Engine Disassembly. Remove the four cylinder head dowels and the cylinder block drain plugs from the cylinder block. Remove the cylinder block from the work stand.

Assembly

Install the replacement cylinder block on the work stand. Install the cylinder block drain plugs and cylinder head dowels. Transfer the parts removed from the old cylinder block to the new cylinder block by following steps 5 thru 36, 39 thru 58 under Engine Assembly. Check all assembly clearances and correct as necessary.

SPECIFICATIONS

GENERAL SPECIFICATIONS

Engine	Compression Ratio	Bore And Stroke	Compression Pressure (1)	Oil Pressure 2000 rpm	Firing Order	Belt Tension (2)
302 V-8	8.2:1	4.00 x 3.00		40-60 psi	1-5-4-2-6-3-7-8	New 140 Used 110

(1) Lowest reading must be within 75% of highest, to be within specifications.
(2) All belts. A used belt is one that has been in operation for 10 minutes.

CYLINDER HEAD

Engine	Combustion Chamber Volume–CC	Valve Guide Bore Dia–Standard Int and Exh	Valve Seat Width	Valve Seat Angle	Valve Seat Runout (Maximum)	Valve Arrangement Front to Rear	Rocker Arm Stud Bore Dia–Std	Gasket (1) Surfaces Flatness
302 V-8	56.7–59.7	0.3433–0.3443	Int 0.060–0.080 Exh 0.060–0.080	Int and Exh 45°	0.0015	RT I-E-I-E-I-E-I-E LT E-I-E-I-E-I-E-I	0.3680–0.3695	0.003 inch in any 6 inches or an overall of 0.006

(1) Head gasket surface finish RMS 60-150

VALVE ROCKER ARMS, PUSH RODS AND TAPPETS

Engine	Rocker Arm Lift Ratio	Valve Push Rod Maximum Runout	Valve Tappet or Lifter			Collapsed Tappet Gap	
			Standard Diameter	Clearance (1) To Bore	Hydraulic Leak-down Rate	Allowable	Desired
302 V-8	1.61:1	0.015	0.8740–0.8745	0.0007–0.0027	5-50 Seconds Max–Measured at 1/16 inch plunger travel	0.090–0.190	0.090–0.140

(1) Wear Limit – 0.005

VALVES

Engine	Valve Stem to Valve Guide Clearance		Valve Head Diameter		Valve Face Angle	Valve Face Runout (Maximum)
	Intake	Exhaust	Intake	Exhaust		
302 V-8	0.0010–0.0027 (1)	0.0015–0.0032 (1)	1.773–1.791	1.453–1.468	44°	0.0020

(1) Wear Limit 0.0055

VALVES (Continued)

Engine	Valve Stem Diameter							
	Standard		0.003 Oversize		0.015 Oversize		0.030 Oversize	
	Intake	Exhaust	Intake	Exhaust	Intake	Exhaust	Intake	Exhaust
302 V-8	0.3416–0.3423	0.3411–0.3418	0.3446–0.3453	0.3441–0.3448	0.3566-0.3573	0.3561–0.3568	0.3716–0.3723	0.3711–0.3718

VALVE SPRINGS

Engine	Valve Spring Pressure–Lbs @ Specified Length		Valve Spring Free Length (Approx)	Valve Spring Assembled Height (Pad to Retainer)	Valve Spring Out of Square (Max)
	Pressure	Wear Limit			
302 V-8	76-84 @ 1.69 190-210 @ 1.31	68 @ 1.69 171 @ 1.31	1.94	1-43/64–1-45/64	5/64 (0.078)

CAMSHAFT

Item	Bearing	302 V-8	Item	Bearing	302 V-8
Camshaft Journal Diameter–Standard (1)	(No. 1)	2.0805–2.0815	Camshaft Bearings Inside Diameter	(No. 1)	2.0825–2.0835
	(No. 2)	2.0655–2.0665		(No. 2)	2.0675–2.0685
	(No. 3)	2.0505–2.0515		(No. 3)	2.0525–2.0535
	(No. 4)	2.0355–2.0365		(No. 4)	2.0375–2.0385
	(No. 5)	2.0205–2.0215		(No. 5)	2.0225–2.0235
Camshaft bearing Location (2)	(No. 1)	0.0050–0.0200			

(1) Camshaft journal maximum runout ..... 0.005 Camshaft journal maximum out-of-round 0.005
(2) Distance in inches that the front edge of the bearing is installed towards the rear from the front face of the cylinder block.

CAMSHAFT DRIVE

MECHANISM–302 V-8

Crankshaft Sprocket Assembled Face Runout TIR (Maximum)	Timing Chain Deflection (Maximum)
0.006	0.500

CAMSHAFT

Engine	Lobe Lift (1)		Theoretical Valve Lift		Camshaft End Play (2)	Camshaft Journal To Bearing Clearance (3)
	Intake	Exhaust	Intake	Exhaust		
302 V-8	0.2303	0.2375	0.3707	0.3823	0.001–0.007	0.001–0.003

(1) Maximum allowable lobe lift loss (All Engines) 0.005 (2) Wear Limit 0.009 (3) Wear Limit 0.006

CA128B-B

CRANKSHAFT AND FLYWHEEL

Engine	Main Bearing Journal Diameter ①	Main Bearing Journal Runout-Maximum ②	Main Bearing Journal Thrust Face Runout	Main Bearing Journal Max. Taper	Thrust Bearing Journal Length	Main and Rod Bearing Journal Finish R.M.S. Max.	Main and Rod Bearing Journal Thrust Face Finish R.M.S.
302 V-8	2.2482–2.2490	0.0040	0.001	0.0003 Per Inch	1.137–1.139	12	35 Front–25 Rear

① Maximum Out-of-round 0.0004 ② Wear Limit 0.005

Engine	Connecting Rod Journal Diameter ①	Connecting Rod Bearing Journal Maximum Taper	Crankshaft Free End Play	Crankshaft to Rear Face of Block Runout TIR Max.	Flywheel Clutch Face Runout	Flywheel Ring Gear Lateral Runout	
						Standard Transmission	Automatic Transmission
302 V-8	2.1228–2.1236	0.0004 Per inch	0.004–0.008 ②	0.005	0.010	0.040	0.064

① Maximum Out-of-round.....0.0004 ② Wear Limit.....0.012

CRANKSHAFT BEARINGS

Engine	Connecting Rod Bearings			Main Bearings		
	To Crankshaft Clearance		Wall Thickness	To Crankshaft Clearance		Wall Thickness
	Desired	Allowable	–Standard ①	Desired	Allowable	–Standard ①
302 V-8	0.008–0.0015	0.0008–0.0026	0.0572–0.0577	No. 1 0.0001–0.0015 Others 0.0005–0.0015	No. 1 0.0001–0.0020 Others 0.0005–0.0024	NO. 1 0.0961–0.0966 Others 0.0957–0.0962

① 0.002 U.S. thickness.....Add 0.0010 to standard thickness

CONNECTING ROD

Engine	Piston Pin Bore or Bushing I.D.	Connecting Rod Bearing Bore Diameter ①	Connecting Rod Length Center to Center	Connecting Rod Alignment Max. Tot. Difference ②		Connecting Rod Assembly (Assembled to Crankshaft)
				Twist	Bend	Side Clearance ③
302 V-8	0.9104–0.9112	2.2390–2.2398	5.0885–5.0915	0.012	0.004	0.010–0.020

① Connecting rod bearing bore maximum out-of-round and taper.....0.0004
② Pin bushing and crankshaft bearing bore must be parallel and in the same vertical plane within the specified total difference at ends of 8-inch long bar measured 4 inches on each side of rod.
③ Wear Limit 0.023

PISTON

Engine	Diameter ①			Piston To Cylinder Bore Clearance	Piston Pin Bore Diameter	Ring Groove Width		
			0.003 Oversize			Compression		Oil
	Coded Red	Coded Blue				Top	Bottom	
302 V-8	3.9984–3.9990	3.9996–4.0002	4.0008–4.0014	0.0018–0.0026	0.9123–0.9126	0.0800–0.0810	0.0800–0.0810	0.1880–0.1890

① Measured 90° to pin centerline and at pin centerline height.

CYLINDER BLOCK

Engine	Cylinder Bore Diameter ①	Tappet Bore Diameter	Main Bearing Bore Diameter	Distributor Shaft Bearing Bore Diameter	Head Gasket Surface Flatness ②
302 V-8	4.0004–4.0036	0.8752–0.8767	2.4412–2.4420	0.4525–0.4541	0.003 inch in any 6 inches or 0.006 inch overall

① Maximum out-of-round.....0.001
Wear Limit.....0.005
Maximum taper.....0.001
Wear Limit.....0.010
① Cylinder bore surface finish RMS.....15–35
② Head gasket surface finish RMS.....60–150

PISTON RINGS

Engine	Ring Width		Side Clearance			Ring Gap		
	Compression Ring		Compression Ring		Oil Ring	Compression Ring		Oil Ring
	Top	Bottom	Top	Bottom		Top	Bottom	
302 V-8	0.077–0.078	0.0770–0.0780	0.002–0.004 ①	0.0020–0.0040	Snug	0.010–0.020	0.010–0.020	0.015-0.055 ②

① Wear Limit 0.002 Max. increase in total clearance. ② Steel rail.

PISTON PIN

Engine	Length	Standard	Diameter		To Piston Clearance	To Connecting Rod Bushing Clearance
			0.001 Oversize	0.002 Oversize		
302 V-8	3.010–3.040	0.9120–0.9123	0.9130–0.9133	–	0.0002–0.0004	Interference Fit

OIL PUMP

Engine	Relief Valve Spring Tension–Lbs @ Specified Length	Drive Shaft to Housing Bearing Clearance	Relief Valve Clearance	Rotor Assembly End Clearance (Pump Assembled)	Outer Race to Housing (Radial Clearance)
302 V-8	10.6–12.2 @ 1.704	0.0015–0.0029	0.0015–0.0029	0.001–0.004	0.001–0.013

CA1288 B1

TORQUE LIMITS 302 V-8

Note: All values given are in Ft-Lbs unless otherwise stated. Oil threads with lightweight engine oil unless the threads require oil-resistant or water resistant sealer.	
Item	Torque
Cylinder Head Bolts	
Step 1	50
Step 2	60
Step 3	65–72
Main Bearing Cap Bolts	60–70
Oil Pan to Cylinder Block 1/4–20	7–9
5/16–18	9–11
Oil Pan Drain Plug	15–20
Intake Manifold to Cylinder Head	23–25
Exhaust Manifold to Cylinder Head	12–16
Oil Pump to Cylinder Block	22–32
Oil Pump Cover Plate	6–14
Oil Pump Pick-Up Tube to Oil Pump	10–15
Oil Filter Insert to Cylinder Block	20–30

Note: All values given are in Ft-Lbs unless otherwise stated. Oil threads with lightweight engine oil unless the threads require oil-resistant or water resistant sealer.	
Item	Torque
Flywheel to Crankshaft	75–85
Exhaust Manifold to Muffler Inlet Pipe	25–35
Valve Rocker Arm Stud Nut	17–23 Ft-Lbs
Vibration Damper to Crankshaft	70–90
Pulley to Vibration Damper	35–50
Water Pump to Cylinder Block or Front Cover	12–15
Valve Rocker Arm Cover	3–5
Fuel Pump to Cylinder Front Cover	17–27
Connecting Rod Nuts	19–24
Cylinder Front Cover	12–15
Water Outlet Housing	12–15
Camshaft Sprocket to Camshaft	40–45
Camshaft Thrust Plate to Block	9–12
EGR Valve to Carburetor Spacer	10–15
Alternator Pivot Bolt	50–60

APPROXIMATE
OIL PAN CAPACITIES

	Crankcase Capacity (Quarts)	
Engine	U.S. Measure	Imperial Measure
302 V-8	6.00	5.00

TORQUE LIMITS FOR VARIOUS SIZE BOLTS–FT-LBS

Caution: If any of the torque limits listed in this table disagree with any of those listed in the preceding tables, the limits listed in the preceding tables prevail.						
Size (inches)	1/4–20	5/16–18	3/8–16	7/16–14	1/2–13	9/16–18
Torque (Ft-lbs)	6–9	12–18	22–32	40–55	55–80	85–120

CA1288-B2

PART 21-23 330, 360, 361, 390 and 391 CID V-8 Engines

COMPONENT INDEX	Page
CAMSHAFT	
Removal and Installation	23-16
CAMSHAFT BEARING	
Removal and Installation	23-23
CAMSHAFT REAR BEARING BORE PLUG	
Removal and Installation	23-17
CLUTCH PILOT BUSHING	
Removal and Installation	23-17
CONNECTING ROD BEARINGS	
Removal and Installation	23-20
CRANKCASE VENTILATION SYSTEM	
Description	23-02
Removal and Installation	23-09
CRANKSHAFT	
Removal and Installation	23-21
CRANKSHAFT REAR OIL SEAL	
Removal and Installation	23-18
CYLINDER ASSEMBLY	
Disassembly and Assembly	23-30
CYLINDER BLOCK	
Disassembly and Assembly	23-30
CYLINDER FRONT COVER AND TIMING CHAIN	
Removal and Installation	23-14
CYLINDER HEADS	
Disassembly and Assembly	23-27
Removal and Installation	23-12
ENGINE	
Description	23-02
Disassembly and Assembly	23-24
Removal and Installation	23-04
ENGINE FRONT SUPPORTS	
Removal and Installation	23-07
ENGINE REAR SUPPORTS	
Removal and Installation	23-09
EXHAUST EMISSION CONTROL SYSTEM	
Description	23-02
EXHAUST MANIFOLDS	
Removal and Installation	23-12
FLYWHEEL	
Removal and Installation	23-17
FRONT OIL SEAL	
Removal and Installation	23-16
INTAKE MANIFOLD	
Removal and Installation	23-10
MAIN BEARINGS	
Removal and Installation	23-19
OIL FILTER	
Removal and Installation	23-24
OIL PAN	
Removal and Installation	23-17
OIL PUMP	
Disassembly and Assembly	23-28
Removal and Installation	23-17
PISTON AND CONNECTING RODS	
Disassembly and Assembly	23-29
Removal and Installation	23-20
SPECIFICATIONS	23-31
VALVE CLEARANCE ADJUSTMENT	23-04
VALVE LIFTER	
Disassembly and Assembly	23-28
Removal and Installation	23-13
VALVE ROCKER ARM COVER AND ROCKER ARM	
Disassembly and Assembly	23-27
Removal and Installation	23-10
VALVE SPRING, RETAINER AND STEM SEAL	
Removal and Installation	23-12
WATER PUMP	
Removal and Installation	23-14

DESCRIPTION

ENGINES

MEDIUM AND HEAVY DUTY

The 330 MD V-8, 330 HD V-8, 361 HD V-8 and 391 HD V-8 engines (Fig. 1) have the same basic design. Refer to Part 21-01 for engine identification and application information.

The engines are available with either a standard mount fan or a high-mount fan for the B-, F-, LN-and LT-Series vehicles (Fig. 1). On C-Series vehicles, the fan is mounted on the crankshaft damper. The 330, 361 and 391 HD V-8 engines are equipped with exhaust valve seat inserts. The 361 and 391 CID engines are equipped with intake valve seat inserts.

LIGHT DUTY

The 360 and the 390 V-8 engines are of the same basic design. A typical engine is shown in Fig. 2.

EXHAUST EMISSION CONTROL SYSTEM

The Imco exhaust emission control system improves engine combustion to reduce contaminants normally emitted through the exhaust system. This is achieved by using a specially-calibrated carburetor and distributor. The Exhaust Gas Recirculation (EGR) System is covered in Volume VI of this Manual.

CRANKCASE VENTILATION SYSTEM

On a positive closed-type crankcase ventilation system (Fig. 3), the complete system is sealed and connected to the air cleaner by a hose. Thus, the crankcase receives air from the air cleaner. If the system becomes restricted, a back-flow condition may occur, thereby venting the crankcase gases into the air cleaner silencing chamber.

The amount of regulator valve opening or restriction is governed by intake manifold vacuum pressure.

During idle, the high intake manifold vacuum overcomes the spring pressure and moves the valve to the Low-Speed Operation position (Fig. 4). With the valve in this low flow position, the ventilating air passes between the valve (jiggle pin) and the outlet port. In this position there is minimum ventilation, but it never completely seals off the air flow.

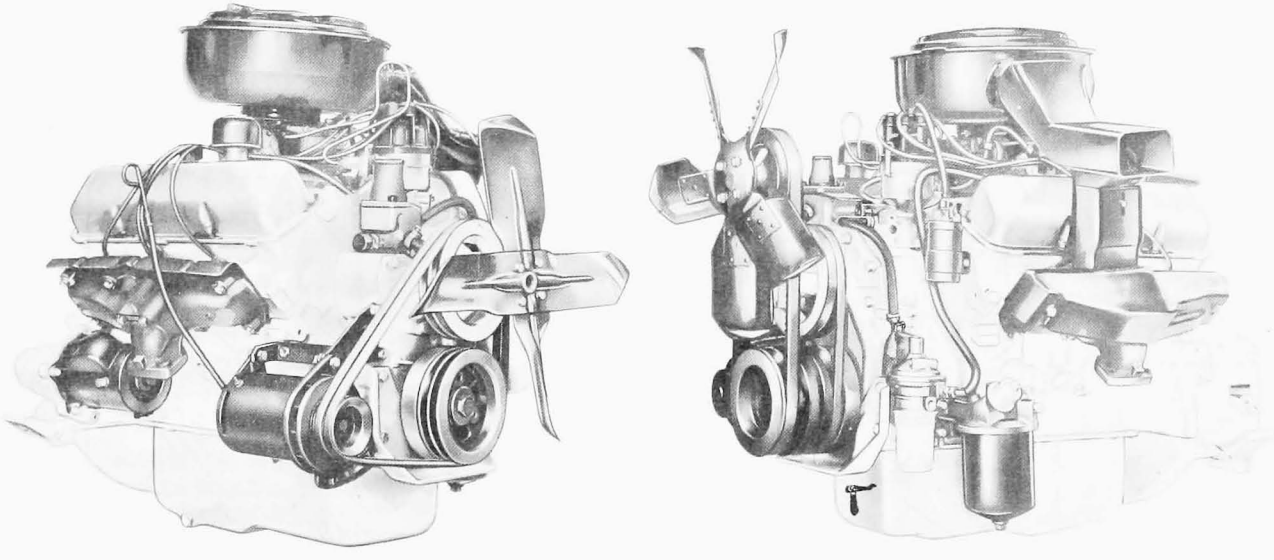

STANDARD MOUNT FAN

HIGH MOUNT FAN

A3088-B

FIG. 1 Typical 330, 361 and 391 Engines

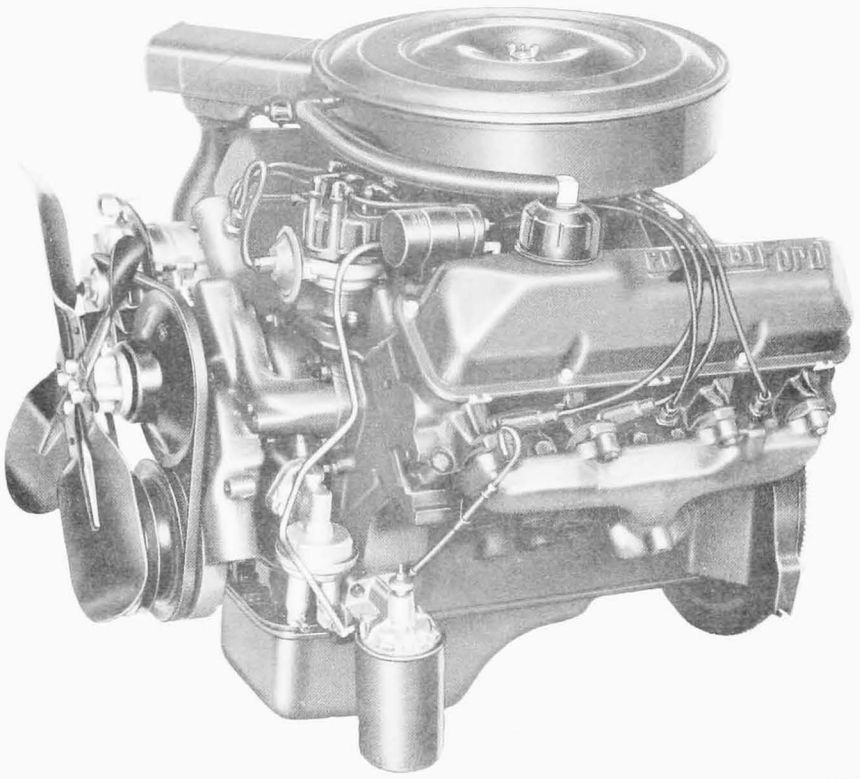

A2720-A

FIG. 2 Typical 360 or 390 Engine

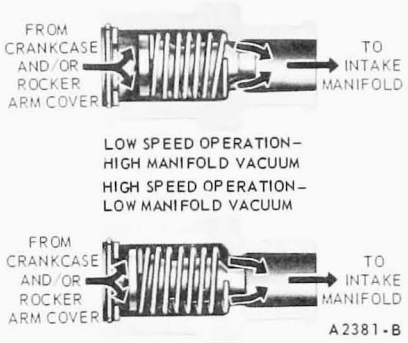

FIG. 4 Positive Closed-Type Crankcase Ventilation Regulator Valve Operation

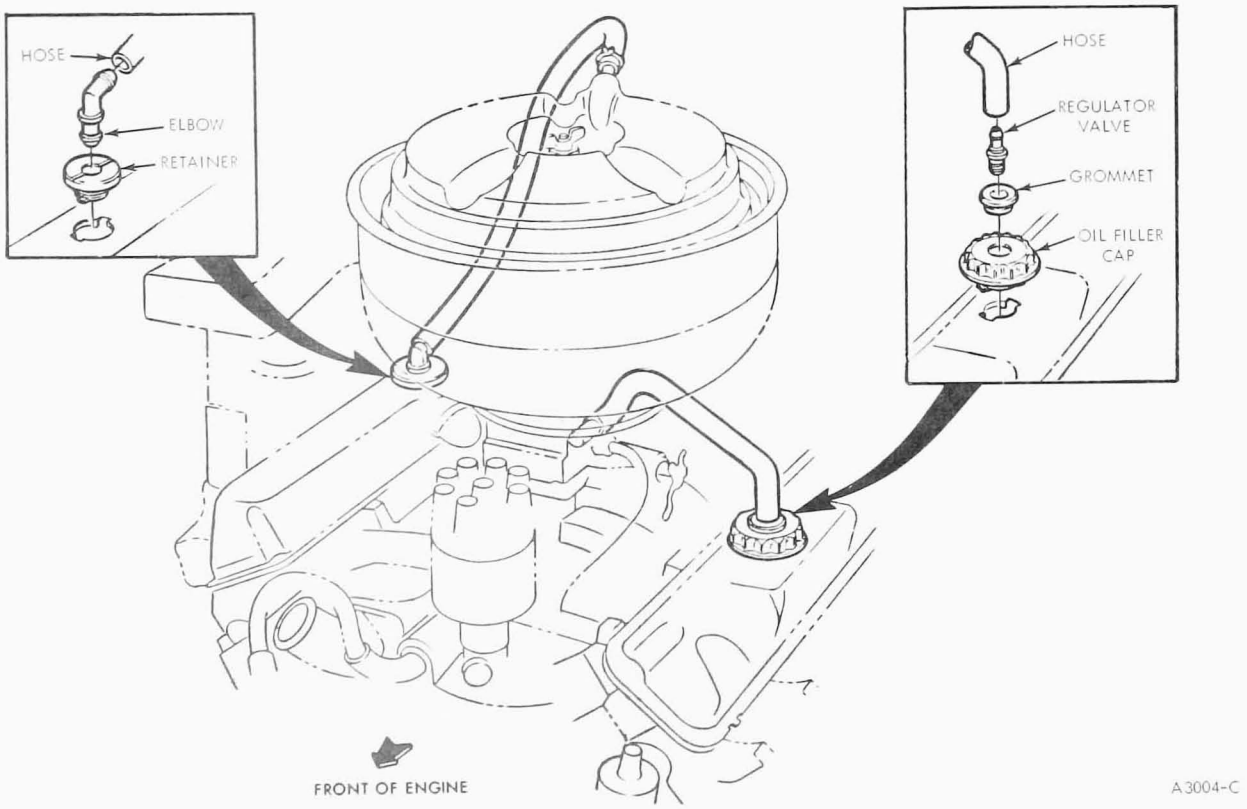

FIG. 3 Typical Crankcase Ventilation System

ADJUSTMENTS

VALVE CLEARANCE

The valve arrangement is E-I-E-I-I-E-I-E from front to rear on both cylinder banks.

A 0.060 inch longer and a 0.060 shorter than standard push rod is available for service to provide means of compensating for dimensional changes in the valve mechanism. Refer to the Master Parts List for the pertinent Part Number.

Valve stem to valve rocker arm clearance should be to the specified clearance with the hydraulic lifter completely collapsed. Repeated valve reconditioning operations (valve and/or valve seat refacing) will decrease the clearance to the point that if not compensated for, the hydraulic valve lifter will cease to function.

To determine whether a longer push rod is necessary, make the following check:

1. Install an auxiliary starter switch. Crank the engine with the ignition switch OFF.
2. **Position the crankshaft as outlined in steps 3 and 4.** Position a hydraulic lifter compressor tool on the rocker arm and slowly apply pressure to bleed down the hydraulic lifter until the plunger is completely bottomed (Fig. 5). Hold the lifter in the fully collapsed position and insert a low-limit (See Specifications) clearance gauge between the valve stem and the rocker arm of the valve being checked. If the gauge enters, the old push rod may be used. If a high-limit gauge enters, the operating range of the lifter is excessive which indicates severe wear has occurred at the push rod ends, rocker arm, or valve stem. In this case, it will be necessary to determine the area of discrepancy and the worn part(s) should be replaced. If all the valve train components except the push rod are within limits, install a 0.060-inch longer push rod.
3. Rotate the crankshaft until No. 1 piston is on TDC at the end of the compression stroke and check the following valves:
   No. 1 Intake-No. 1 Exhaust
   No. 3 Intake-No. 4 Exhaust
   No. 7 Intake-No. 5 Exhaust
   No. 8 Intake-No. 8 Exhaust
4. After these valves have been checked, rotate the crankshaft 360 degrees (one revolution) to position No. 6 piston on TDC and check the following valves:
   No. 2 Intake-No. 2 Exhaust
   No. 4 Intake-No. 3 Exhaust
   No. 5 Intake-No. 6 Exhaust
   No. 6 Intake-No. 7 Exhaust

To replace a push rod, it will be necessary to remove the valve rocker arm shaft assembly.

Upon replacement of a valve push rod and/or valve rocker arm shaft assembly, the engine should not be cranked or rotated until the hydraulic lifters have had an opportunity to leak down to their normal operating position. The leakdown rate can be accelerated by using the tool shown in Fig. 5 on the valve rocker arm and applying pressure in a direction to collapse the lifter.

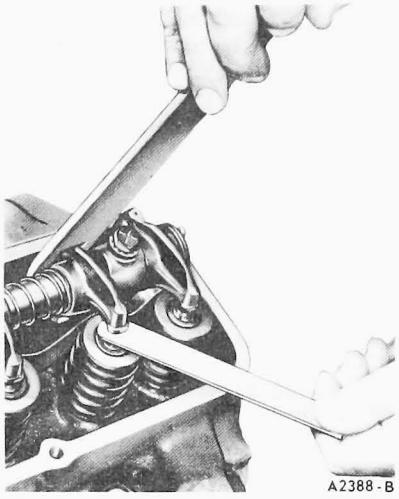

FIG. 5 Checking Valve Clearance

REMOVAL AND INSTALLATION

When installing nuts or bolts that must be torqued (refer to the pertinent section for torque specifications), oil the threads with light weight engine oil. **Do not oil threads that require oil-resistant or water resistant sealer.** Always Lubricate all bearing surfaces and/or mating surfaces with SE engine oil at assembly.

ENGINE ASSEMBLY

B, F AND LT-SERIES

Removal

1. Drain the cooling system and the engine crankcase.
2. Disconnect the ground cable from the battery.
3. Remove the hood from the vehicle.
4. Disconnect the radiator upper hose from the engine, and the lower hose from the water pump.
5. Remove the fan attaching bolts and remove the fan.
6. Remove the air cleaner and vent hose from the carburetor.
7. Remove the radiator attaching bolts. If the vehicle is equipped with an automatic transmission, disconnect the oil cooler lines from the radiator lower tank. Carefully lift the radiator and hoses from the engine compartment.
8. Disconnect the wires from the alternator and place them to one side.
9. Drain the air system and disconnect the air line at the compressor.
10. Disconnect the cable from the starter motor. Remove the three starter motor attaching bolts. Remove the starter.
11. Disconnect the muffler inlet pipe from each exhaust manifold.
12. Disconnect the body-to-engine ground strap from the engine.
13. Disconnect the accelerator linkage at the dash.
14. Disconnect the choke cable (manual choke) and the throttle cable from the carburetor.
15. Disconnect the tachometer cable from the distributor.
16. Disconnect the heater hose from the engine.
17. Disconnect the treadle valve air line.
18. Disconnect the fuel pump flex line from the fuel line. Cap the tank line.
19. Disconnect the wiring harness from the engine.
20. Remove the ignition coil and the

mounting bracket from the engine.
21. Disconnect the drive shaft center bearing retainer from the cross member to permit raising or lowering the transmission.
22. Position a jack under the transmission to support it.
23. Remove the cover from the lower end of the clutch housing.
24. Remove the attaching bolts from the lower half of the clutch housing.
25. Secure engine lifting brackets (Tool T58P-6000-A) to the cylinder heads.
26. Remove the nuts that secure the engine front support to the upper insulator.
27. Remove the remaining clutch housing attaching bolts.
28. Secure the lifting sling (Tool T53L-300-A) to the lifting brackets and raise the engine high enough to remove the bolts that attach the engine front support bracket to the upper insulator.
29. Carefully lift the engine away from the transmission and out of the chassis.
30. Install the engine on a workstand.

Installation

1. Install the engine lifting brackets (Tool T58P-6000-A) on the engine and attach the hoist and lifting sling (Tool T53L-300-A). Remove the engine from the workstand.
2. Lower the engine into the chassis. Align the clutch hub splines with those on the transmission input shaft. Push the engine into place against the clutch housing and install the attaching bolts.
3. Remove the jack from under the transmission.
4. Lower the engine to align the engine front support bracket with the upper insulator, then install the attaching bolts and nuts. Remove the engine lifting sling and brackets from the engine. Torque the nuts to specifications.
5. Secure the drive shaft center bearing support to the frame crossmember.
6. Install the cover on the lower end of the clutch housing.
7. Position a new gasket on each exhaust manifold flange. Secure the muffler inlet pipes to the exhaust manifolds.
8. Position the starter motor to the clutch housing and secure it with the attaching bolts and lock washers. Connect the cable to the starter.
9. Connect the alternator wires to their respective terminals.
10. Secure the coil and the bracket to the left cylinder head.
11. Connect the fuel pump flex line to the fuel line.
12. Connect the accelerator linkage to the linkage at the dash panel.
13. Connect the treadle valve air line.
14. Connect the choke cable (manual choke) and the throttle cable to the carburetor and adjust both.
15. Connect the tachometer cable to the distributor.
16. Connect the engine wiring harness to the respective connectors.
17. Connect the body-to-engine-ground strap to the rear of the engine.
18. Connect the heater hoses to the outlets on the engine.
19. Connect the main air line to the compressor.
20. Position the fan in the radiator shroud.
21. Carefully position the radiator (with hose) into place. Install the radiator attaching bolts.
22. Position the fan on the water pump pulley (or high mount), and secure it in place with the attaching bolts.
23. Connect the radiator upper hose to the outlet on the engine and the lower hose to the water pump.
24. Fill and bleed the cooling system.
25. Install the hood.
26. Fill the crankcase to the proper level with the recommended oil.
27. Connect the battery cables.
28. Adjust the clutch as required.
29. Start the engine and check for oil and water leaks.
30. Install the air cleaner and vent hose.

C-AND CT-SERIES

Removal

1. Release the cab lock and tilt the cab forward. Drain the cooling system and the crankcase.
2. Disconnect the ground cable from the battery.
3. Remove the clamps holding the throttle, choke and tachometer cables. Remove the clamps securing the heater hoses to the radiator.
4. Remove the air cleaner. Disconnect the accelerator rod, throttle cable and choke cable (manual choke) from the carburetor and position out of the way. Disconnect the tachometer cable from the distributor.

   On a vehicle with an air compressor, remove the compressor belt.
5. Remove the fan from the crankshaft damper and lay it inside the fan shroud.

   On a vehicle with an automatic transmission, disconnect the transmission oil cooler inlet and outlet lines at the radiator lower tank.
6. Disconnect the radiator upper hose at the water outlet housing and the lower hose at the radiator.
7. Disconnect and remove the vent line between the radiator and the supply tank and the hose between the water outlet housing and the supply tank.
8. Remove the radiator attaching bolts and insulators from the top brackets and the nuts and insulators from the bottom support rods. Remove the radiator, shroud and fan as an assembly.
9. Disconnect the heater hoses at the water pump and intake manifold and position out of the way.
10. Disconnect the tachometer cable from the distributor and position out of the way. Remove the ignition coil.
11. Remove the radiator supply tank from the cab rear support.
12. Disconnect the flexible fuel line from the tank line. Cap the tank line.
13. Disconnect the windshield wiper and vacuum brake hoses from the intake manifold.

    On a vehicle with an air compressor, release the air pressure and disconnect the main air line from the compressor.
14. Disconnect the wires from the alternator and the engine wires at the junction block.
15. Remove the clutch return spring. Remove the hydraulic clutch slave cylinder attaching bolts.
16. Remove the left and right muffler inlet pipe attaching bolts from the exhaust manifolds and disengage the inlet pipes.
17. Disconnect the starter cable from the starter. Remove the starter attaching bolts and remove the starter (ground strap is held by one starter bolt).

    On a vehicle with power steering, remove the power steering pump and reservoir and position it out of the way.
18. Position a floor jack under the transmission.
19. Remove the flywheel housing inspection cover attaching bolts and remove the cover. Remove the flywheel housing-to-engine attaching bolts.
20. Remove the nuts and bolts from the engine front support and upper insulator.
21. Attach the lifting brackets (Tool T58P-6000-A) to the engine.
22. Using a hoist and lifting sling (Tool T53L-300-A), remove the engine from the chassis.
23. Install the engine on a workstand.

Installation

1. Attach lifting brackets (Tool T58P-6000-A) and lifting sling (Tool T53L-300-A) to the engine. Remove the engine from the workstand.
2. Position the engine in the chassis, using a floor crane. Engage the

clutch hub splines with the transmission input shaft and slide the engine back against the transmission.

3. Install the flywheel housing-to-engine attaching bolts and tighten to specifications. Install the flywheel housing inspection cover. Remove the jack from under the transmission.
4. Lower the engine to align the front support bracket with the upper insulator, and install the bolts and nuts. Torque to specifications. Remove the engine lifting sling and lifting brackets.

On a vehicle with power steering, install the power steering unit.

5. Install the starter, positioning the ground strap under one of the attaching bolts. Tighten the attaching bolts to specifications. Attach the starter cable to the starter.
6. Install the left and right muffler inlet pipes to the exhaust manifolds, using new gaskets. Tighten the bolts to specifications.
7. Install the hydraulic clutch slave cylinder to the flywheel housing. Attach the clutch return spring.
8. Connect the alternator wires to their respective terminals. Connect the engine wires to the junction block.

On a vehicle with an air compressor, connect the main air line.

9. Connect the brake hose to the intake manifold vacuum connections.
10. Remove the cap from the fuel line and connect it to the flexible line on the fuel pump.
11. Install the radiator supply tank to the cab rear support.
12. Install the ignition coil to the left bank cylinder head. Connect the tachometer cable to the distributor.
13. Connect the heater hoses to the water pump and to the intake manifold.
14. Install the radiator, shroud and fan (loose, inside shroud) in the chassis. Secure the radiator with insulators and nuts to the bottom support rods and insulators and belts to the top brackets.
15. Connect the radiator-to-supply tank vent tube, the radiator lower hose to the radiator and the radiator upper hose to the water outlet housing.
16. Install and connect the water outlet housing-to-supply tank hose. On a vehicle with an automatic transmission, connect the transmission oil cooler inlet and outlet lines to the radiator.
17. Install the fan on the crankshaft damper and torque the bolts to specifications.

On a vehicle with an air compressor, install the air compressor belt and adjust belt tension to specifications.

18. Connect the accelerator rod, throttle cable and choke cables (manual choke) to the carburetor. Install the air cleaner.
19. Attach the heater hoses, throttle cable, choke cable and tachometer cable.
20. Connect the ground cable to the battery.
21. Fill the crankcase and cooling systems with the specified lubricant and coolant.
22. Operate the engine at fast idle and check for oil and water leaks.
23. Lower the cab and lock it in position.

LN-AND LNT-SERIES

Removal

1. Position a suitable support in front of the truck to hold the hood and fender assembly when it is fully forward.
2. Raise the hood and fender assembly. Disconnect and remove the battery.
3. Drain the cooling system and the crankcase.
4. Disconnect the check cable assemblies and allow the hood to swing forward out of the way, resting on the previously positioned support.
5. Remove the radiator-to-cowl support rod.
6. On a vehicle with power steering, disconnect the power steering pressure line from the pump reservoir and return line from the pump housing. Drain the oil into a suitable container. Loosen and remove the power steering drive belt.
7. Disconnect the radiator upper hose from the thermostat housing and the lower hose from the water pump.
8. Refer to the disconnect points for this radiator shown in Group 27 and remove the radiator.
9. Remove the bolts attaching the fan blade to the water pump hub (or high-mount fan hub).
10. On a vehicle with an air compressor, release the air pressure from the system. Disconnect the main air line from the air compressor. Disconnect the main air line from the treadle valve.
11. Remove the air cleaner.
12. Disconnect the heater hoses from the engine.
13. Disconnect the flexible fuel line (fuel pump to fuel tank) at the fuel tank line and install a cap on the tank line.
14. Disconnect the choke control cable (manual choke) and the throttle control cable at the carburetor. Disconnect the accelerator linkage.
15. Disconnect the tachometer cable from the distributor, remove the tachometer cable retaining brackets, and position the cable out of the way. Remove the ignition coil.
16. Disconnect the vacuum line from the engine intake manifold.
17. Disconnect the engine wiring harness from the engine.
18. Disconnect the wires from the alternator.
19. Remove the flywheel housing cover. Remove the flywheel housing lower attaching bolts.
20. Disconnect the starter cable from the starter. Remove the starter attaching bolts and remove the starter motor, dust cover and engine ground strap.
21. Remove the left and right muffler inlet pipe attaching nuts from the manifold and disengage the inlet pipes.
22. Remove the drive shaft center bearing retainer to permit raising and lowering of the drive shaft and transmission. Position a jack under the transmission.
23. Remove the flywheel housing to engine upper bolts.
24. Remove the bolt(s) attaching the engine front mounting plate to the engine front mount.
25. Attach the engine lifting brackets (Tool T58P-6000-A) to the cylinder heads. Attach a hoist and lifting sling (Tool T53L-300-A) to the engine lifting brackets.
26. Raise the engine just enough to remove the front support bracket-to-upper insulator bolts and nuts.
27. Remove the engine from the engine compartment, and install it on a workstand.

Installation

1. Install the engine lifting brackets (Tool T58P-6000-A) to the cylinder heads. Attach hoist and lifting sling (T53L-300-A) to the lifting brackets and remove the engine from the work stand.
2. Position the engine to align the front support bracket with the upper insulator. Install the bolts and nuts, then torque to specifications.
3. Install the flywheel housing-to-engine bolts and torque to specifications.
4. Lower the engine and remove the transmission jack. Remove the engine lifting brackets.

5. Install the bolt(s) attaching the engine mounting plate to the engine front mount and tighten the bolts to specifications.
6. Install the drive shaft center bearing retainer.
7. Install the flywheel housing cover attaching bolts.
8. Place new gaskets on the end of the muffler inlet pipes and position in the right and left exhaust manifolds. Install the attaching bolts and tighten to specifications.
9. Position the starter in the starter opening. Install the engine ground strap and starter attaching bolts, then tighten the bolts to specifications. Connect the starter cable to the starter.
10. Connect the wires to the alternator.
11. Position the engine wiring harness to the engine and connect the four connectors.
12. Connect the vacuum line to the intake manifold.
13. Position the tachometer cable on the engine, attach the two attaching clamps, and connect the tachometer cable to the distributor. Install the ignition coil.
14. Connect the choke cable (manual choke) and the throttle cable to the carburetor. Connect the accelerator linkage.
15. Remove the cap from the fuel tank line. Connect the flexible line to the fuel tank line.
16. Connect the heater hoses to the engine.
17. Install the carburetor air cleaner.
18. On a vehicle with air brakes, connect the main air line to the compressor and the air line to the treadle valve.
19. Install the fan blade on the hub. Tighten the bolts to specifications.
20. Install the radiator.
21. Connect the radiator lower hose to the water pump and the radiator upper hose to the thermostat housing.

On a vehicle with power steering, install and tighten the drive belt. Connect the power steering pressure line to the pump housing and the return line to the pump reservoir.

22. Position the radiator support rod to the cowl and radiator and install attaching nuts. Tighten the nuts to specifications.
23. Fill the crankcase with the recommended oil. Fill the cooling system.
24. Raise the hood and connect the check cables.
25. Install and connect the battery.
26. Start the engine and check for leaks.
27. Close the hood and fender assembly.

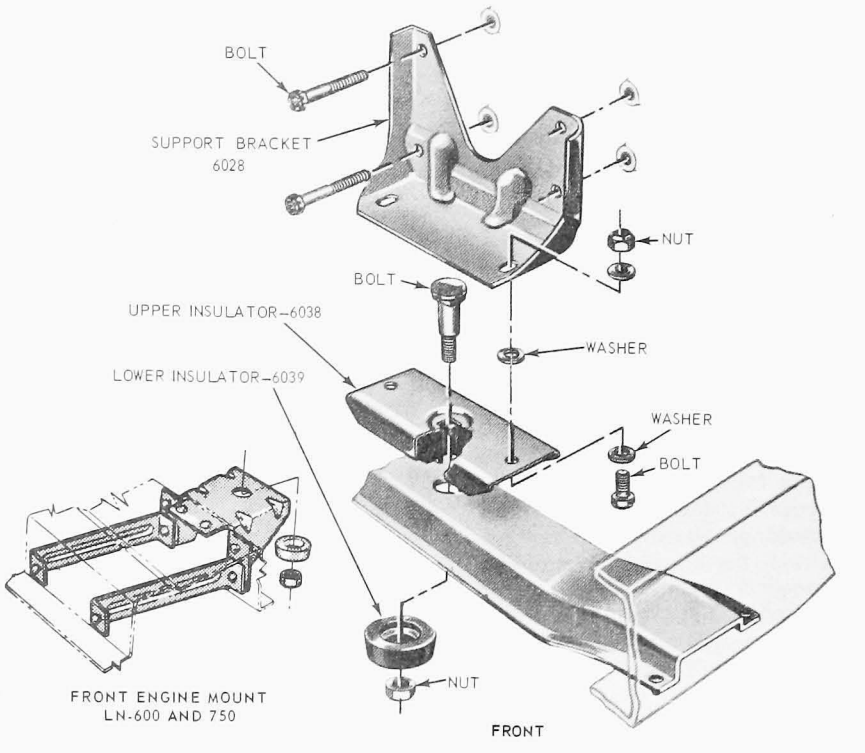

FIG. 6 Engine Front Supports — C-600-800, CT-800-F, B-500-750, LN-600-750

ENGINE FRONT SUPPORTS

When installing engine supports, be sure that the engine is correctly aligned on the supports and that the attaching bolts and/or nuts are torqued to specifications.

The various engine front supports are shown in Figs. 6 through 9.

SINGLE FRONT TYPE

Removal

1. Remove the insulator-to-frame attaching nut(s) and the lower insulator(s).
2. Remove the upper insulator-to-support bracket nuts, washers (and bolts, if so equipped).
3. Loosen the engine rear support insulator nuts approximately 1/4 turn.
4. Raise the engine about 1 inch with a jack and a block of wood placed under the oil pan; then, remove the insulator. On models shown in Fig. 7, remove the bolt from the upper insulator.
5. To remove the support bracket from the engine, remove the attaching bolts.

Installation

1. If the support bracket was removed from the engine, position it on the cylinder front cover, and install the attaching bolts. Torque the bolts to specifications.
2. On models shown in Fig. 7, install the upper insulator center bolt in the insulator. Position the upper insulator assembly on the support bracket, and install the bolts, washers and nuts, fingertight. On models shown in Fig. 7, install the nuts and washers fingertight.
3. Lower the engine and install the lower insulator(s) and attaching nut(s). Torque all the nuts to specification.
4. Torque the engine rear support nuts to specifications.

DOUBLE FRONT TYPE

Removal

1. Remove the insulator-to-support bracket nut and lock washer (Figs. 8 and 9). **If only one insulator is being removed, loosen the other insulator.**
2. Check for possible interference between the fan and fan shroud or engine accessories when the engine is raised for insulator removal. Using a jack and wood block placed under the oil pan, raise the engine just enough to allow clearance for removal of the insulator(s).

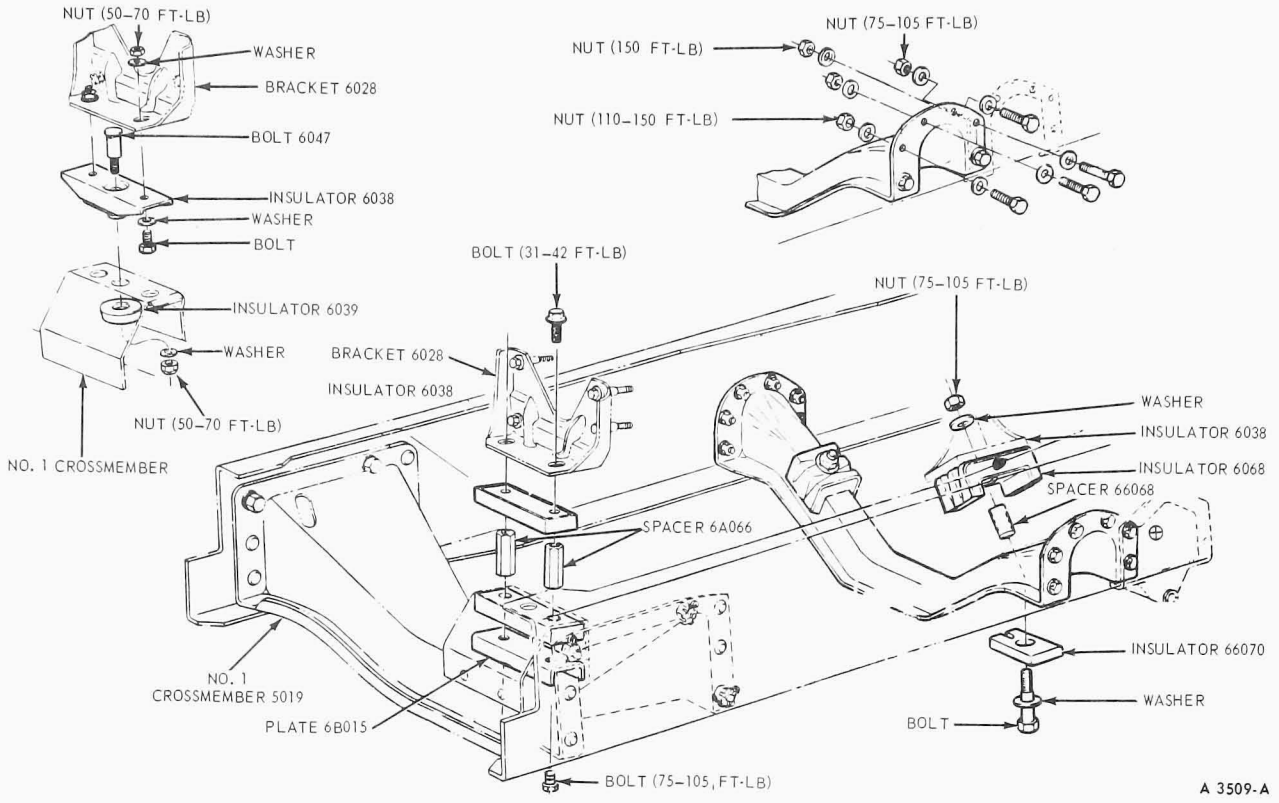

FIG. 7 Engine Supports — L, LT, LTS, LN, LNT-800

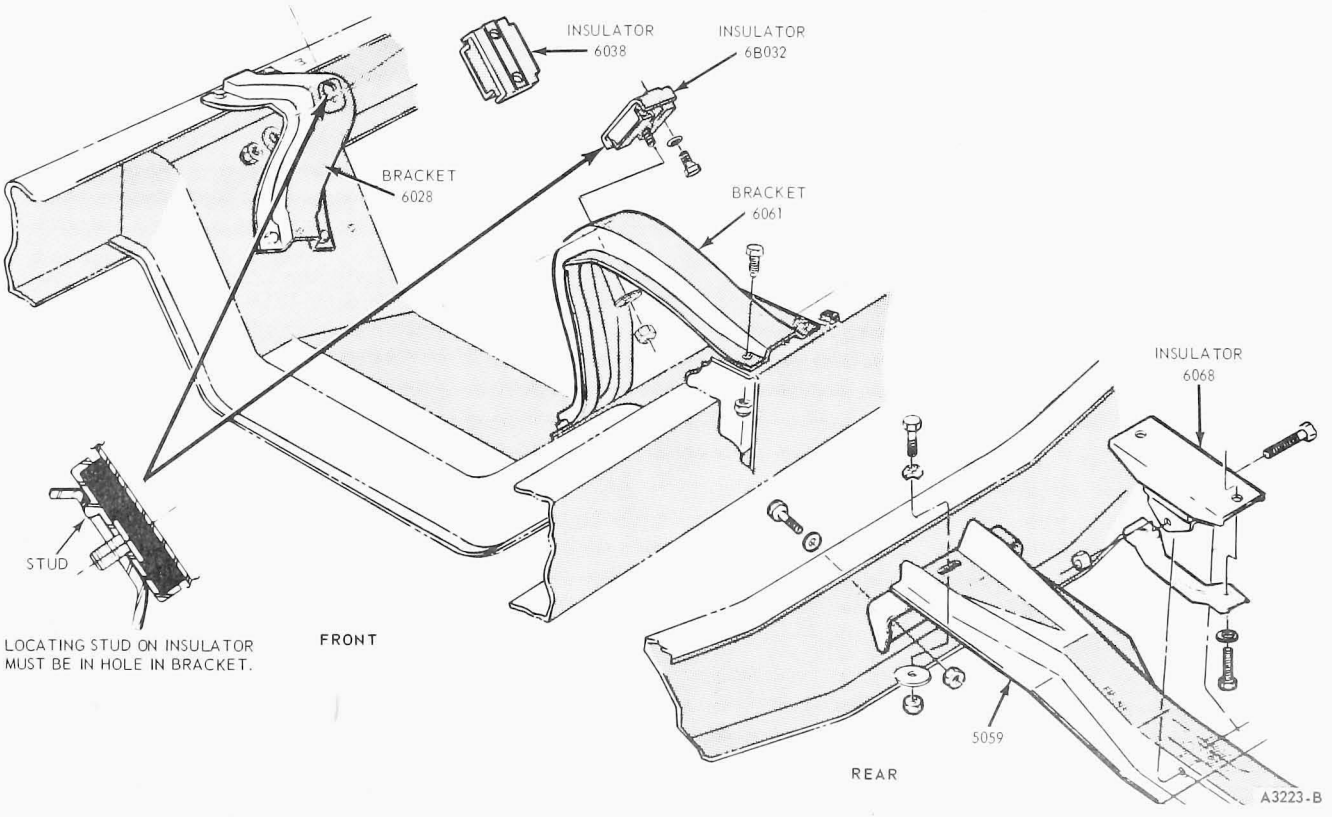

FIG. 8 Engine Supports — F350

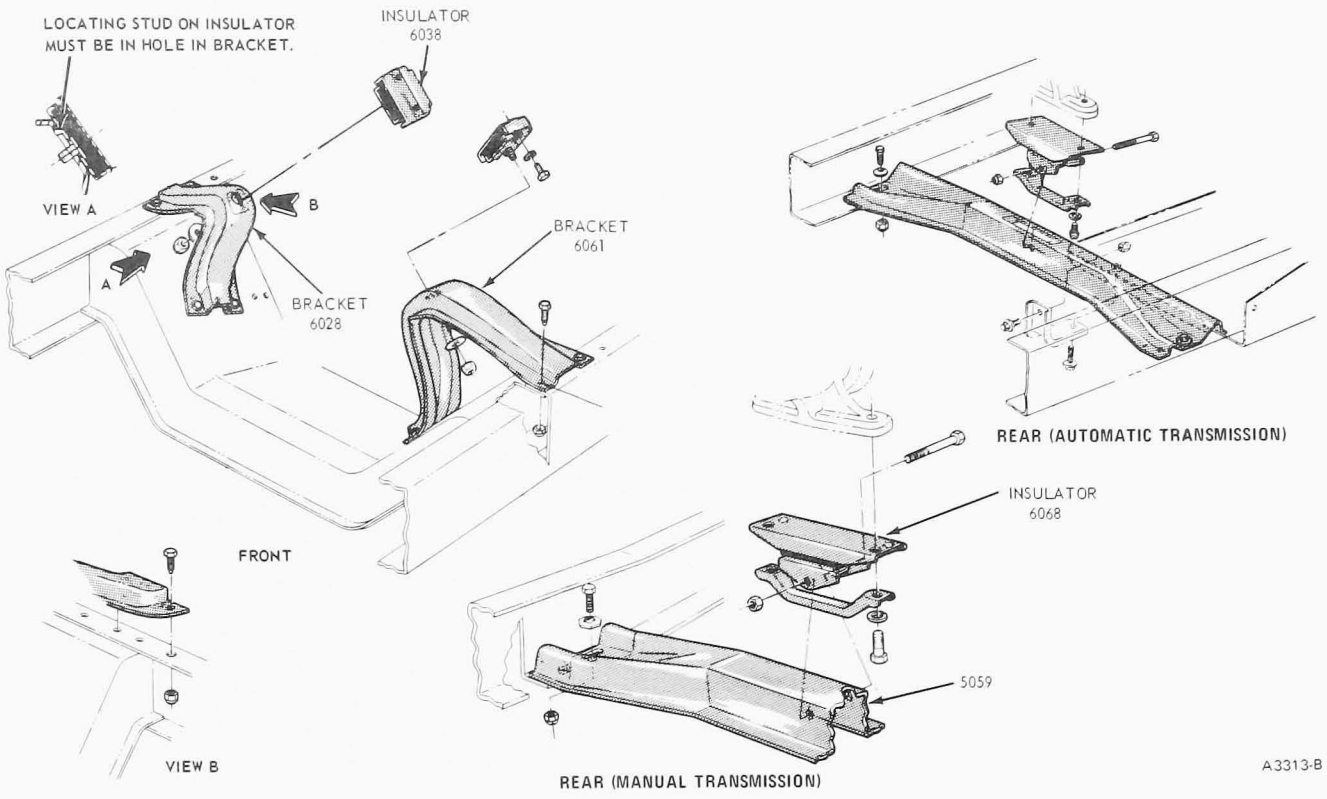

FIG. 9 Engine Supports — F-100-250

3. Remove the insulator-to-engine bolts and lock washers. Remove the insulator.

Installation

1. Position the insulator on the engine. Install the insulator-to-engine bolts and lock washers and torque to specifications.
2. Lower the engine carefully to make sure the insulator stud enters the support bracket mounting hole squarely and that the special locating stud is centered in the hole provided in the support bracket (Figs. 8 and 9).
3. Install the nut and lock washer on the insulator stud and torque the nut to specifications.

ENGINE REAR SUPPORTS

DOUBLE REAR TYPE

Typical engine rear supports are shown in Figs. 7 and 10.

Removal

1. Remove the nut, bolt, washers, lower insulator and spacer from each engine rear support.
2. Raise the rear of the engine with a jack and wood block placed under the transmission.
3. Remove the upper insulator from each rear support.

Installation

1. Position the upper insulators on the frame crossmember.
2. Lower the engine until the engine rear supports almost touch the upper insulators. Align the insulators with the supports. Install the spacers, lower insulators, bolts, nuts and washers, if used.
3. Lower the engine and remove the jack. Torque the nuts to specifications.
4. On all except the 330 MD engine, safety-wire the crossmember-to-clutch housing bolts.

SINGLE REAR TYPE

Removal

1. Remove the attaching bolts, nut and washer (Figs. 8 and 9).
2. Raise the transmission slightly to provide clearance, then remove the insulator and insulator retainer.

Installation

1. Position the insulator and retainer (Figs. 8 and 9) and install the insulator-to-extension housing bolts and lock washers.
2. Lower the transmission and install the insulator-to-frame crossmember bolt. Torque the nut and bolts to specifications.

CRANKCASE VENTILATION SYSTEM

Removal

1. Loosen or remove the hose clamps, and remove the vent hose from the air cleaner, if so equipped. Remove the air cleaner.
2. Grasp the crankcase ventilation regulator valve and pull it straight up and out of the grommet in the valve rocker arm cover fitting or oil filler cap.
3. In the same manner, remove the crankcase vent hose and elbow out of the other valve rocker arm cover. Remove the crankcase vent hose from the carburetor spacer. Separate the hoses from the regulator valve and elbow.

Refer to Part 21-01 for the Cleaning and Inspection procedures for the hoses, elbow, carburetor spacer and oil filler cap. **Do not clean the regulator valve. It should be replaced at the specified interval.**

Installation

1. Install the crankcase vent hose on the regulator valve. Install the hose

on the carburetor spacer inlet nipple.

2. Install the crankcase ventilation regulator valve in the valve rocker arm cover or oil filler cap. Be sure the grommet is properly seated around the regulator valve and valve rocker arm cover fitting on oil filler cap.
3. Install the hose on the elbow and insert the elbow into the retainer in the valve rocker arm cover.
4. Install the air cleaner and connect the crankcase vent hose.

VALVE ROCKER ARM COVER AND ROCKER ARM

Removal

1. Remove the air cleaner.
2. Disconnect the spark plug wires at the spark plugs. Remove the wires from the bracket on the valve rocker arm cover(s) and position the wires out of the way.

Remove the crankcase ventilation regulator valve and hose(s) from the valve rocker arm covers.

3. Remove the valve rocker arm cover(s).

If the left cover is removed, position the wiring harness to one side.

4. Starting at the No. 4 cylinder, loosen the right valve rocker arm shaft support bolts in sequence, two turns at a time. After the bolts are all loosened, remove the valve rocker arm shaft assembly and the oil baffle plate. Starting at the No. 5 cylinder, follow the same procedure on the left valve rocker arm shaft support bolts. **This procedure must be followed to avoid damage to the valve rocker arm shaft.**

Installation

1. Apply Lubriplate to the pad end of the rocker arms, to the tip of the valve stems, and to both ends of the push rods.
2. Crank the engine until the No. 1 piston is on TDC at the end of the compression stroke.
3. Rotate the crankshaft damper an additional 45 degrees.
4. Position the baffle plate and the valve rocker arm shaft assembly on the cylinder heads with the valve push rods in place and the rocker shaft support bolts fingertight. **Be sure the shaft is positioned so that the oil holes are to the bottom. Also, the identification notch on the end of the shaft (Fig. 11) must be face down and toward the front on the right bank, or toward the rear on the left bank.**
5. Starting at the No. 4 cylinder, tighten the bolts in sequence, two turns at a time, until the supports fully contact the cylinder head. Torque the bolts in sequence to specifications.
6. Starting at the No. 5 cylinder, follow the same procedure for the left valve rocker arm shaft support bolts. The additional time consumed in this procedure will permit the hydraulic lifters to leak down. This will minimize the possibility of bending the push rods, valves, or the rocker arms. **Be sure that the hydraulic lifters have leaked down to their normal operating position before cranking the engine. This is necessary in order to avoid possible damage to the valves, push rods, or valve rocker arms.**
7. Check the valve to rocker arm clearances and correct, as necessary, if any part of the valve train has been replaced (Part 21-01).
8. Clean the valve rocker arm cover(s). Place the new gaskets in the covers making sure that the tabs of the gasket engage the notches provided in the cover.
9. Position the cover(s) on the cylinder head(s). Make sure the gasket seats evenly all around the head. Install the bolts (and the wiring harness clamps on the left cover). The cover is tightened in two steps. First, torque the bolts to specifications. Two minutes later, torque the bolts to the same specifications.

Install the crankcase ventilation regulator valve and hose(s) on the valve rocker arm covers.

10. Connect the spark plug wires. Install the air cleaner and connect the crankcase vent hose.

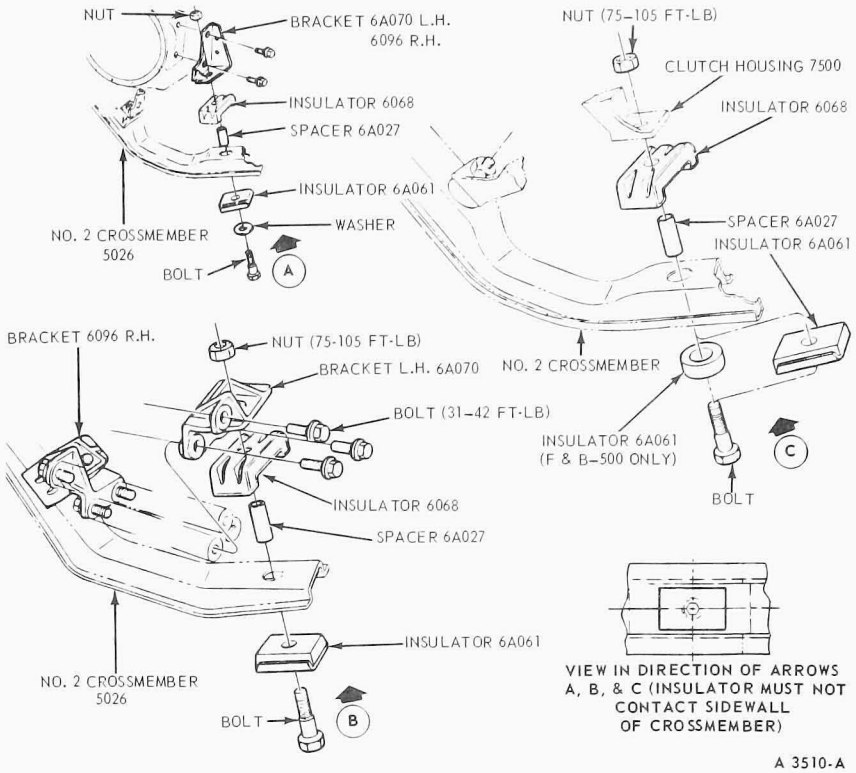

FIG. 10 Engine Rear Supports — F & B 500-750, C & LN-600-750, C & CT-800

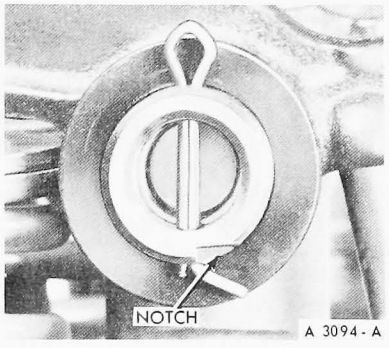

FIG. 11 Typical Installation Identification Mark — Rocker Arm Shaft Assembly

INTAKE MANIFOLD

Removal

1. Drain the cooling system. Remove

the air cleaner and crankcase vent hose(s).
2. Disconnect the accelerator rod at the carburetor. If applicable, remove the accelerator cross shaft bracket from the intake manifold and position it out of the way.
3. Remove the carburetor fuel inlet line. Disconnect the distributor vacuum line at the carburetor.
4. Disconnect the coil high-tension lead, and the coil wires at the coil. Disconnect the oil pressure sending unit wire at the sending unit. Remove the wiring harness from the retaining clips on the left valve rocker arm cover and position it out of the way.
5. Disconnect the spark plug wires at the spark plugs and remove the wires from the ignition harness brackets on the valve rocker arm covers.
6. Remove the distributor cap and spark plug wire assembly. Disconnect the distributor vacuum line at the distributor and remove the line.
7. Remove the distributor hold-down bolt and clamp. Remove the distributor.
8. Disconnect the radiator upper hose(s) at the water outlet housing. On a C-Series vehicle, disconnect the coolant supply tank hose at the water outlet housing. Disconnect the water temperature sending unit wire at the sending unit. Disconnect the heater hoses and position the hoses out of the way.
9. Disconnect the water pump by-pass hose(s) at the water pump.
10. Remove the valve rocker arm covers and crankcase vent hoses.
11. Refer to the procedures under Valve Rocker Arm Shaft Assembly Removal and remove the valve rocker arm shaft assembly.
12. Remove the valve push rods in sequence so that they can be installed in their original positions.
13. Remove the intake manifold attaching bolts.
14. Install standard eye bolts with 5/16-18 threads in the left front and right rear rocker arm cover threaded holes. Attach the engine lifting sling (Fig. 12).
15. Carefully remove the intake manifold. Remove the intake manifold gaskets and seals.
16. If the manifold is to be disassembled, remove the water pump by-pass hose(s), and the water outlet housing. Remove the carburetor, spacer and gasket. Remove the water temperature sending unit.

Refer to Part 21-01 for the cleaning and inspection procedures.

Installation

The intake manifold is shown in Fig. 13.

1. If the intake manifold was disassembled, install the carburetor, spacer and gasket making sure that the EGR spacer gasket is installed correctly. Install the water temperature sending unit, using electrical-conductive sealer. Coat the thermostat gasket with water-resistant sealer. Position the thermostat gasket on the intake manifold or on the water outlet housing. Install the thermostat and/or water outlet housing. Torque the bolts to specifications. Install the water pump by-pass hose.
2. Clean the mating surfaces of the intake manifold, cylinder heads and cylinder block. Use a suitable solvent to remove all traces of oil.
3. Coat the cylinder block seal surfaces with a quick-setting seal adhesive. Apply a non-hardening oil-resistant sealer to the mating lines of the cylinder heads and cylinder block.
4. Position new seals on the cylinder block and new gaskets on the cylinder heads. **Be sure the seals are properly positioned during installation as the adhesive sticks immediately on contact.** Position the manifold gasket slots over the end tabs on the seals (360 and 390 CID). Coat these four connections with a non-hardening sealer. Be sure the holes in the gaskets are aligned with the holes in the cylinder heads.
5. Install the eye bolts in the intake manifold, attach the engine lifting sling and carefully lower the intake manifold on the engine (Fig. 12).
6. Position the intake manifold by temporarily inserting the distributor in place. After the intake manifold is in place, run a finger around the seal area to make sure the seals are in place. If the seals are not in place, remove the intake manifold and reposition the seals.
7. Be sure the holes in the manifold gaskets and manifold are in alignment. Coat the underside of all attaching bolt heads with non-hardening oil-resistant sealer. Install the manifold attaching bolts and torque them to specifications in sequence as shown in Fig. 14. After the engine has been operated and reaches normal operating temperature, retorque the manifold bolts to specification.
8. Remove the distributor and the engine lifting sling and eye bolts.

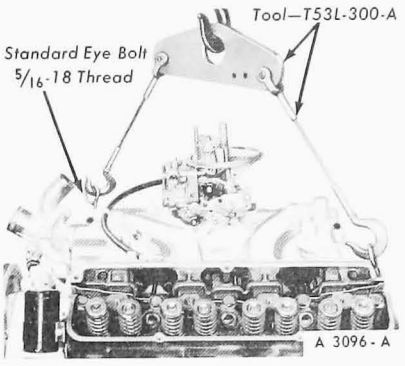

FIG. 12 Removing or Installing Intake Manifold — Typical

9. Connect the water pump by-pass hose to the water pump.
10. Connect the water temperature sending unit, and the radiator upper hose. On a C-Series vehicle, connect the coolant supply tank hose. Connect the heater hoses.
11. Apply Lubriplate to both ends of the push rods. Install the push rods in their original bores, positioning the lower ends of the rods in the lifter cups. Refer to the procedure under Valve Rocker Arm Shaft Assembly Installation and install the valve rocker arm shaft assembly.
12. Rotate the crankshaft damper until the No. 1 piston is on TDC at the end of the compression stroke. Position the distributor in the block with the rotor at the No. 1 firing position and the points open. Install the distributor hold-down clamp.
13. Clean the valve rocker arm covers. Place the new gaskets in the cover making sure that the tabs of the gasket engage the notches provided in the cover.
14. Install the valve rocker arm covers. The cover is tightened in two steps. First, torque the bolts to specifications. Two minutes later, torque the bolts to the same specifications.
15. Connect the crankcase ventilation hoses.
16. Install the carburetor fuel inlet line and the distributor vacuum line to the carburetor.
17. Install the distributor cap. Connect the spark plug wires. Install the wiring harness in the retaining clips on the left valve rocker arm cover.
18. Connect the oil pressure sending unit wire, the coil high-tension lead, and the coil primary wire.
19. If applicable, install the accelerator cross shaft bracket. Connect the accelerator rod.
20. Fill and bleed the cooling system.

21. Install the air cleaner and vent hose; then start the engine and check and adjust the ignition timing. Connect the distributor vacuum line to the distributor. Operate the engine until engine temperatures have stabilized and adjust the engine idle speed and idle fuel mixture. Retorque the manifold bolts to specification.

EXHAUST MANIFOLDS

Removal

1. Remove the air cleaner. Disconnect the exhaust manifold(s) at the muffler pipe(s).
2. Disconnect the power steering pump bracket from the cylinder block and move it out of the way. Position the pump so that the oil will not drain out.
3. Remove the dipstick and tube assembly.
4. Remove the attaching bolts and tab washers, then remove the exhaust manifolds.

Installation

1. Refer to Part 21-01 for the cleaning and inspection procedures; then clean the mating surfaces of the exhaust manifold and cylinder head. Scrape the gasket material from the mounting flange of the exhaust manifold and muffler inlet pipe.
2. Apply graphite grease to the mating surface of the exhaust manifold.
3. Position the exhaust manifold on the cylinder head and install the attaching bolts and tab washers. Working from the center to the ends, torque the bolts to specifications. Lock the bolts by bending one tab of the washer over a flat on the bolt.
4. Install the dipstick and tube assembly.
5. Position the power steering pump bracket on the cylinder block and install the attaching bolts. Adjust the belt tension. Position the hoses and install the power steering hose bracket.
6. Position a new gasket on the muffler inlet pipe and connect the exhaust manifold to the inlet pipe. Install and torque the attaching nuts to specifications.
7. Install the air cleaner.

CYLINDER HEADS

Removal

1. Remove the intake manifold and carburetor as an assembly, following the procedure under Intake Manifold Removal.
2. Disconnect the exhaust manfolds at the muffler inlet pipes.

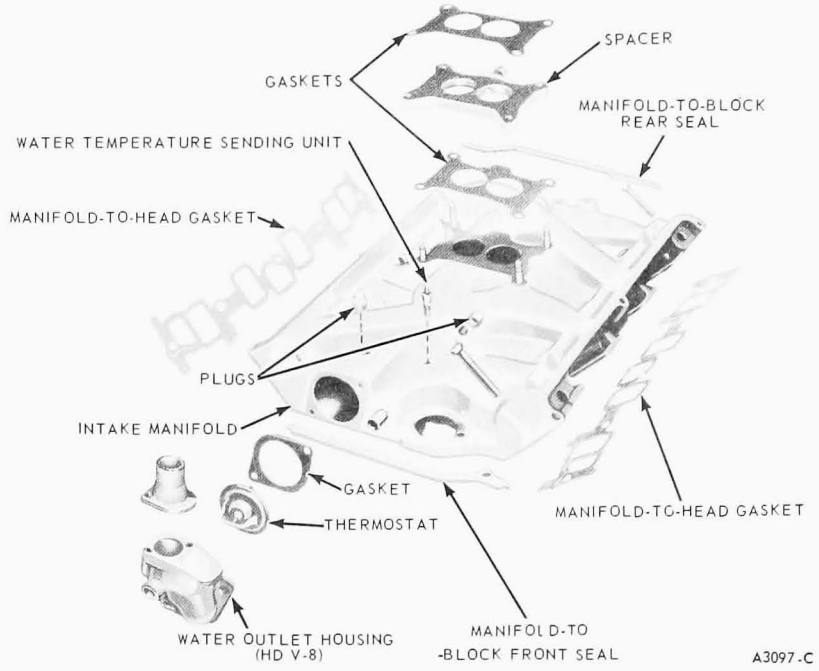

FIG. 13 Typical Intake Manifold Assembly

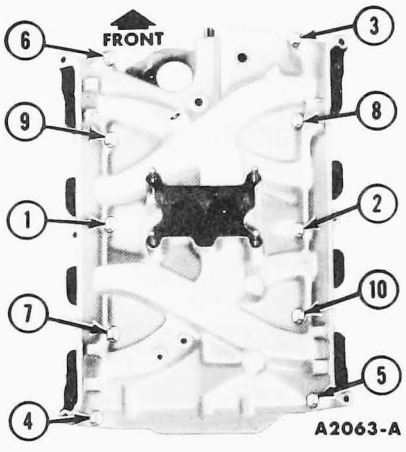

FIG. 14 Intake Manifold Torque Sequence

If the left cylinder head is to be removed, remove the ignition coil.

3. Remove the cylinder head bolts and lift the cylinder heads off the block. **Do not pry between the head and the block.** Remove and discard the cylinder head gasket.

Installation

1. Clean the cylinder head and cylinder block gasket surfaces.
2. Check the flatness of the cylinder head and block gasket surfaces (Part 21-01).
3. Guided by the word **front** on the gasket, install the gasket over the cylinder head dowels.
4. Place the cylinder head on the engine.
5. Oil the threads of the cylinder head bolts, and install the bolts. The cylinder head bolts are tightened in three progressive steps. Torque all the bolts in sequence (Fig. 15) to specifications. When the cylinder head bolts have been tightened, as detailed in this procedure, it is not necessary to retorque the bolts after extended operation.
6. Position new gaskets on the muffler inlet pipes. Connect the exhaust manifolds to the muffler inlet pipes. Torque the nuts to specifications.
7. Install the intake manifold and related parts, following the procedure under Intake Manifold Installation.

VALVE SPRING, RETAINER AND STEM SEAL

Broken valve springs, or worn valve stem seals and retainers may be replaced without removing the cylinder head, providing damage to the valve or valve seat has not occured.

Removal

1. Remove the air cleaner. Remove the valve rocker arm cover(s), following the procedure under Valve Rocker Arm Shaft Assembly Removal.
2. Loosen the valve rocker arm support bolts evenly and alternately, two turns at a time, until the valve spring tension has been released. Remove the push rods of the cylinder to be serviced.

3. Tighten the valve rocker arm support bolts evenly and alternately, two turns at a time, until they are snug. Push the rocker arm to one side and secure it in this position (Fig. 16). If an end valve is to be worked on, it will be necessary to remove the rocker arm from the shaft.
4. Install an air adapter to the spark plug hole and connect the air supply hose to the adapter. Turn on the air supply. **Air pressure may turn the crankshaft until the piston reaches the bottom of its stroke.**
5. Compress the valve spring and remove the valve retainer locks from the valve (Fig. 16). **If air pressure fails to hold the valve in the closed position during this operation, it can be presumed that the valve is not seating or is damaged. If this condition occurs, remove the cylinder head for further inspection.**
6. Remove the valve spring and related parts. Remove the valve stem oil seal (Fig. 17). **If air pressure had forced the piston to the bottom of the cylinder, any removal of air pressure will allow the valve(s) to fall into the cylinder. A rubber band, tape or string wrapped around the end of the valve stem will prevent this condition and still allow enough travel to check the valve for binds.**
7. Remove the air supply hose (or bleed the air pressure), and inspect the valve stem for damage. Rotate the valve and check the valve stem tip for eccentric movement during rotation. Move the valve up and down through normal travel in the valve guide and check the stem for binds. **If the valve has been damaged, it will be necessary to remove the cylinder head for repairs.**
8. If the condition of the valve is satisfactory, hold the valve in the closed position and apply air pressure within the cylinder.

Installation

1. Oil the valve stem and install a new seal. Do not install the O-ring type seal on the exhaust valve at this time (330, 361 HD and 391 HD only).
2. Install the valve spring over the valve.

LD engines use a damper spring in conjunction with the valve spring. Use a positive rotating spring retainer on the exhaust valves of all MD and HD engines.

3. Compress the spring (Fig. 16). If working on a HD engine, apply SE engine oil to the O-ring type seal, then install it on the exhaust valve. Make sure the seal is seated in the groove to avoid damage when the valve spring is released. Install the retainer locks and remove the spring compressor.

Tap the valve stem tip with a soft mallet to make certain that the retainer locks are properly seated.

4. Remove the air line and adapter. Install the spark plug. Remove the wire securing the valve rocker arm and slide the rocker arm into position. Install the end rocker arm(s), if they were removed.
5. Loosen the valve rocker arm support bolts evenly and alternately, two turns at a time, until spring tension is removed. Apply Lubriplate to the pad end of the rocker arm, the tip of the valve stem and to both ends of the push rod. Position the push rod within the rocker arm socket and the valve lifter seat.
6. Tighten the rocker arm shaft support bolts evenly and alternately, two turns at a time, until they are snug. Torque the bolts to specifications.
7. Install the high-tension lead wire in the ignition coil terminal. Install the spark plug wires.
8. Install the valve rocker arm cover(s), following the procedure under Valve Rocker Arm Shaft Assembly Installation.
9. Install the air cleaner.



A2068-A

FIG. 15 Cylinder Head Bolt Torque Sequence

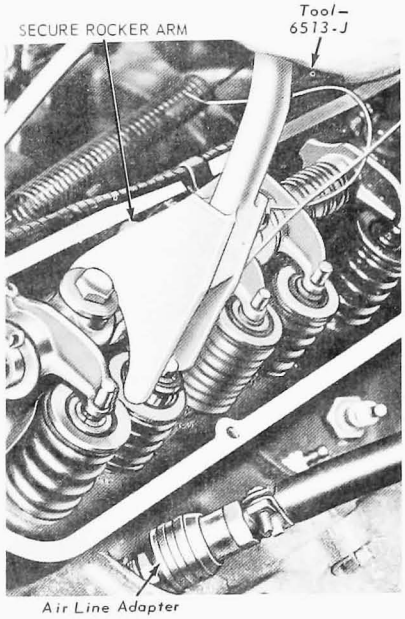

A 3099-A

FIG. 16 Compressing Valve Spring — In Chassis

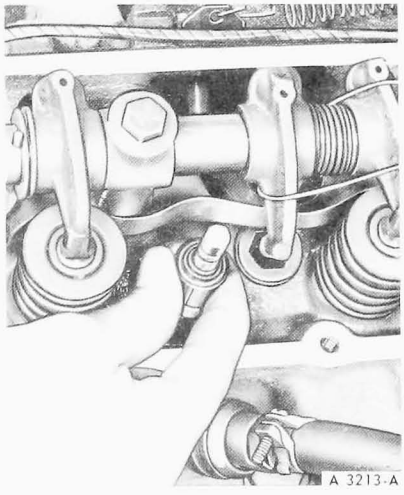

A 3213-A

FIG. 17 Removing Intake Valve Stem Seal

VALVE LIFTER

The following procedure is applicable for removing one or all of the valve lifters. Before replacing a hydraulic valve lifter for noisy operation, be sure the noise is not caused by improper valve clearance or by worn rocker arms or push rods.

Removal

1. Refer to Valve Rocker Arm Shaft Assembly Removal, and remove the valve rocker arm covers and valve rocker arm shaft assemblies.
2. Remove the lifters with tool T70P-14151 through the push rod

openings (Fig. 18). In some cases, it will be necessary to transfer the lifter to an adjoining opening in order to remove it. Place the lifters in a rack so that they can be installed in their original positions.

The internal parts of each hydraulic valve lifter assembly are matched sets. Do not intermix the parts. Keep the assemblies intact until they are to be cleaned.

Installation

1. Lubricate the new (or cleaned) hydraulic valve lifters with heavy SE engine oil and install them through the push rod openings with the lifter removal tool (Fig. 18). Install the push rods in their original positions.
2. Refer to Valve Rocker Arm Shaft Assembly Installation and install the valve rocker arm shaft assemblies, and rocker arm covers.

WATER PUMP

330 MD, 360 AND 390 CID ENGINES

Removal

1. Drain the cooling system. Loosen the alternator adjusting arm bolt and remove the drive belt(s).
2. Remove the fan, spacer and pulley.
3. Disconnect the radiator lower hose, heater hose and the water by-pass hose at the water pump.
4. Remove the bolts attaching the water pump to the block; then remove the pump and gaskets.

Installation

Before a water pump is reinstalled, check it for damage. If it is damaged and requires repair, replace it with a new pump or install a rebuilt pump obtained from a Ford-Authorized Reconditioner.

1. Clean the gasket surfaces of the water pump and cylinder block.
2. Apply water-resistant sealer to both sides of new gaskets and position the gaskets on the water pump outlets.
3. Position the pump body on the block and install the pump attaching bolts. Torque the bolts to specifications.
4. Install the fan, spacer and pulley. Install the drive belt(s) and adjust the tension to specifications. Connect the radiator lower hose, heater hose and water by-pass hose to the water pump. Fill and bleed the cooling system. Operate the engine and check for coolant leaks.

330 HD, 361 AND 391 CID ENGINES

Removal

1. Drain the cooling system. Loosen and remove the drive belt(s).
2. On engines with water-pump mounted fans, remove the fan, spacer and pulley. Let the fan blade rest down in the shroud. On high-fan engines, remove the fan and bracket assembly. On low-fan engines, remove the bolts securing the fan assembly to the crankshaft damper. Remove the fan assembly.

On a vehicle with an air compressor, remove the attaching bolts and position the compressor on the frame rail. Remove the air compressor mounting bracket.

On vehicles with power steering, remove the power steering pump and position it to one side, leaving the hoses attached.

3. Disconnect the radiator lower hose, heater hose and the water by-pass hose at the water pump.
4. Remove the bolts attaching the pump to the cylinder block; then remove the pump and gasket.

Installation

Before a water pump is reinstalled, check it for damage. If it is damaged and requires repair, replace it with a new pump or install a rebuilt pump obtained from an authorized reconditioner.

1. If a new pump is to be installed, remove the fittings from the old pump and install them on the new pump. Clean the gasket surfaces of the water pump and cylinder block.
2. Coat both sides of the new gaskets with water-resistant sealer and position them on the block. Install the water pump and torque the attaching bolts to specifications.
3. Connect the radiator lower hose, heater hose and the water by-pass hose to the water pump.

On a vehicle with an air compressor, install the air compressor bracket and air compressor.

On vehicles with power steering, position the power steering pump to the engine and install the attaching bolts.

4. Install the fan, spacer and pulley. On high-fan engines, install the fan and bracket assembly. On low-fan engines, install the fan assembly on the crankshaft damper. Install the drive belt(s) and adjust the tension to specifications.
5. Fill and bleed the cooling system. Operate the engine until normal operating temperature is reached. Check the coolant level in the radiator. Check for coolant leaks.

CYLINDER FRONT COVER AND TIMING CHAIN

Removal

If the cylinder front cover is being removed to replace the gasket or to replace the fuel pump drive eccentric, it is not necessary to check the timing chain deflection. For cylinder front cover gasket replacement, it is not necessary to remove the timing chain and sprockets.

1. Drain the cooling system and the crankcase. Remove the air cleaner. Disconnect the battery ground cable, and disconnect the distributor vacuum line.
2. Disconnect the radiator upper hose at the water outlet housing. Disconnect the radiator lower hose at the water pump.
3. Disconnect the transmission oil cooler lines, if so equipped. Remove the radiator and support as an assembly. If equipped with an automatic radiator shutter, leave it attached to the radiator assembly.
4. Disconnect the heater hose at the water pump. Remove the water pump by-pass hose(s).

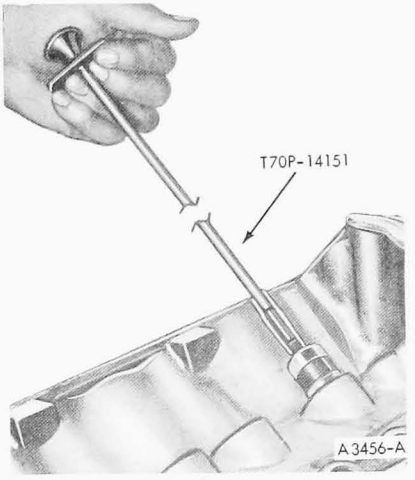

FIG. 18 Removing Valve Lifter

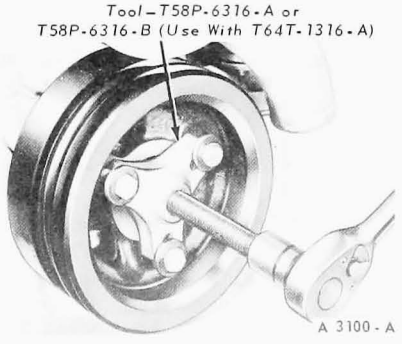

FIG. 19 Removing Crankshaft Damper

On a high-fan installation, remove the cooling fan and drive belt.

5. Remove the power steering pump and position it to one side, leaving the hoses attached.
6. If equipped with an air compressor, disconnect the air lines, and remove the air compressor.
7. Remove the alternator adjusting arm bolt at the alternator. Remove the drive belts. Disconnect the wires and remove the alternator from the support bracket. Remove the water pump and cooling fan drive belts. Remove the water pump and fan as an assembly. On a C-Series vehicle, remove the cooling fan from the crankshaft damper.
8. Remove the cap screw and washer from the end of the crankshaft. Install the puller on the crankshaft damper (Fig. 19) and remove the damper.
9. Disconnect the carburetor fuel inlet line at the fuel pump.
10. Remove the fuel pump attaching bolts and lay the pump to one side with the flexible fuel line still attached.
11. Remove the crankshaft sleeve as shown in Fig. 20.
12. Remove the bolts that attach the cylinder front cover to the cylinder block and to the oil pan. Using a thin blade knife, cut the oil pan gasket flush with the cylinder block face prior to separating the cover from the block. Remove the cylinder front cover, alternator support bracket and adjusting arm bracket and the engine front support bracket.
13. Discard the cylinder front cover gasket. Remove the oil slinger.
14. Check the timing chain deflection by following the procedure in Part 21-01.
15. Check the camshaft end play, following the procedure in Part 21-01.
16. Crank the engine until the timing marks on the sprockets are positioned as shown in Fig. 21.
17. Remove the camshaft sprocket cap screw and the fuel pump eccentric.
18. Slide both sprockets and the timing chain forward, and remove the sprockets and timing chain as an assembly (Fig. 22).

Installation

1. Refer to Part 21-01 for the cleaning and inspection procedures. Clean the crankshaft damper, following the referenced procedures.
2. Position the sprockets and timing chain on the camshaft and crankshaft (Fig. 22). Be sure the timing marks on the sprockets are positioned as shown in Fig. 21.
3. Install the fuel pump eccentric and the camshaft sprocket cap screw (Fig. 23). Torque the sprocket cap screw to specifications. **If a new thrust plate was installed on the camshaft to bring end play within specifications, check the end play (Part 21-01).** Install the crankshaft front oil slinger.
4. Clean all oil pan and cylinder block-to-front cover gasket surfaces.
5. Coat the gasket surface of the oil pan with sealer. Cut and position the required section of a new gasket on the oil pan. Apply sealer at the corners.
6. Coat the gasket surfaces of the block and cover with sealer, and position a new gasket on the block.
7. Position the cylinder front cover on the cylinder block. **Use care when installing the cover to avoid sealer damage or possible gasket mislocation.**
8. Install the cylinder front cover-to-seal alignment tool into proper position. It may be necessary to force the cover downward to slightly compress the pan gasket. This operation can be facilitated by using a suitable tool at the cover attaching hole locations in the cylinder block (Fig. 24). Position the engine front support bracket and alternator mounting bracket and adjusting arm bracket on the cylinder front cover. Install the screws.
9. While pushing in on the pilot, align the oil pan gasket surfaces of the cylinder front cover and cylinder block, and torque the screws to specifications. Remove the pilot.
10. Clean the oil seal rubbing surface on the crankshaft sleeve with solvent and polish with crocus cloth. Examine for grooves, nicks and burrs which could damage the seal. Lubricate the seal rubbing surface with grease and install the crankshaft sleeve.
11. Lubricate the damper hub and line up the damper keyway with the key on the crankshaft. Install the damper on the crankshaft (Fig. 25).
12. Install the damper cap screw and washer, and torque the screw to specifications.
13. Install the power steering pump pulley on the damper. Torque the screws to specifications.
14. Clean the water pump gasket surfaces. Coat new gaskets with water-resistant sealer and position the gaskets on the cylinder block. Install the water pump and fan assembly. Torque the attaching bolts to specifications.

    On a C-Series vehicle, install the

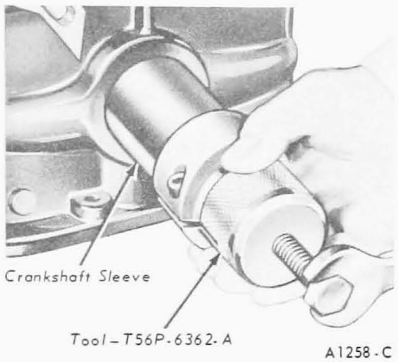

FIG. 20 Removing Crankshaft Sleeve

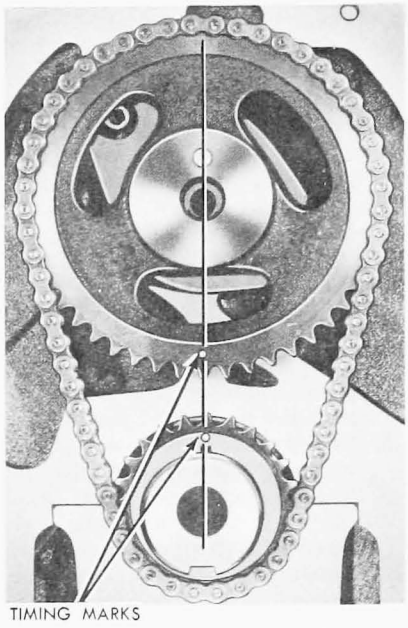

FIG. 21 Aligning Timing Marks

cooling fan on the crankshaft damper.

15. Install and adjust the alternator and water pump drive belt(s).
16. Install the power steering pump and drive belt. Adjust the drive belt tension.

If equipped with an air compressor, install the compressor and connect the air lines. Install the drive belt and adjust the tension to specifications.

On a high-fan installation, install the fan and drive belt and adjust the tension to specifications.

17. Install the fuel pump, using a new gasket.
18. Connect the carburetor fuel inlet line. Connect the heater hose to the water pump. Install the water pump by-pass hose and tighten the hose clamps.
19. Install the radiator, radiator support, and shutter (if so equipped) as an assembly. Connect the radiator lower hose at the water pump and the radiator upper hose at the coolant outlet housing. Connect the battery ground cable. Connect transmission oil cooler lines, if so equipped.
20. If any of the coolant has entered the oil pan when separating the cylinder front cover from the block, the crankcase oil should be drained and refilled with the proper grade and quantity of engine oil before starting the engine.
21. Fill and bleed the cooling system.
22. Install the air cleaner and operate the engine at fast idle to check for coolant and oil leaks. Adjust the ignition timing and connect the distributor vacuum line.

FRONT OIL SEAL

It is good practice to replace the oil seal each time the cylinder front cover is removed.

Removal

1. Remove the cylinder front cover.
2. Drive out the old seal with a pin punch. Clean out the recess in the cover.

Installation

1. Coat a new seal with grease, then position the seal in the cylinder front cover.
2. Position the seal installer and drive the seal into the cover until it is fully seated in the recess (Fig. 26).
3. Check the seal after installation to be sure that the spring is properly positioned in the seal.

CAMSHAFT

The camshaft and related parts are shown in Fig. 27.

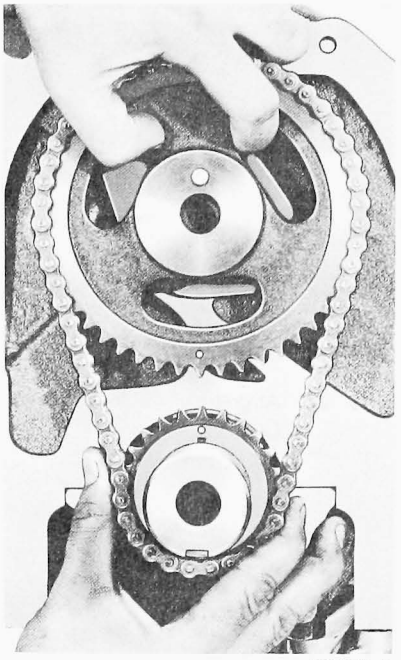

A2075-A

FIG. 22 Removing or Installing Timing Chain

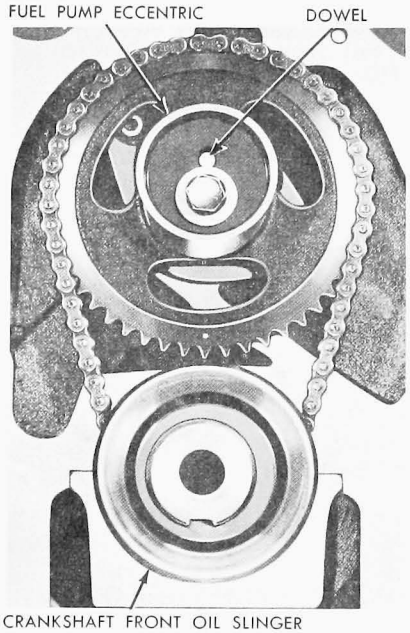

A2076-A

FIG. 23 Fuel Pump Eccentric

Removal

1. Remove the cylinder front cover, following the steps under Cylinder Front Cover and Timing Chain Removal.
2. Refer to Valve Rocker Arm Shaft Assembly Removal and remove the valve rocker arm covers and the valve rocker arm shaft assemblies.
3. Remove the intake manifold and baffle plate, following the procedures under Intake Manifold Removal.
4. Remove the valve lifters in sequence and place them in a rack so that they can be installed in their original locations.
5. Remove the timing chain and sprockets, following the procedures under Cylinder Front Cover and Timing Chain Removal.
6. Remove the camshaft thrust plate. Carefully remove the camshaft by pulling it toward the front of the engine. **Use caution to avoid damaging the camshaft bearing.**

Refer to Part 21-01 for the cleaning and inspection procedures.

Installation

1. Oil the camshaft bearing journals and apply Lubriplate to the lobes. Carefully slide the camshaft through the bearings. Install the thrust plate (Fig. 28).
2. Position the sprockets and timing chain on the camshaft and crankshaft (Fig. 22) with the timing marks on the sprockets aligned as shown in Fig. 21.
3. Install the fuel pump eccentric and the camshaft sprocket cap screw (Fig. 23). Torque the sprocket cap screw to specifications. Install the front oil slinger.
4. **Check the camshaft end play as outlined in Part 21-01. If the end play is excessive,** replace the thrust plate.
5. Replace the crankshaft front oil seal. Install the cylinder front cover, crankshaft damper, and related parts following the procedure under Cylinder Front Cover and Timing Chain Installation.
6. Lubricate the valve lifters with heavy SE engine oil and install them in the bores from which they were removed. Lubricate each end of the push rods with Lubriplate or equivalent and install them in their original positions.
7. Install the intake manifold and baffle plate, following the procedures under Intake Manifold Installation.
8. Refer to Valve Rocker Arm Shaft Assembly Installation and install the valve rocker arm shaft assembly.
9. With the No. 1 piston on TDC at the end of the compression stroke, position the distributor in the block with the rotor at the No. 1 firing position and the points open. Install the hold-down clamp.
10. Install the distributor cap. Connect the coil high-tension lead.
11. Fill and bleed the cooling system.

12. Start the engine, then check and adjust the ignition timing. Connect the distributor vacuum line. Operate the engine at fast idle and check all hose connections and gaskets for leaks.

FLYWHEEL

Removal

1. Disconnect the transmission from the engine and slide it to the rear as outlined in Group 16 (standard transmission) or Group 17 (automatic transmission).
2. Remove the flywheel attaching bolts and remove the flywheel.

Refer to Part 21-01 for the cleaning and inspection procedures.

To check flywheel face runout or replace flywheel ring gear, refer to Part 21-01.

Installation

1. Install the flywheel on the crankshaft flange, apply oil-resistant sealer to the threads and install the attaching bolts. Torque the bolts, in sequence across from each other, to specifications.
2. Check the flywheel runout, following the procedure in Part 21-01.
3. Connect the transmission to the engine as outlined in Group 16 (standard transmission) or Group 17 (automatic transmission).

CLUTCH PILOT BUSHING

Inspection procedures are outlined under Crankshaft Cleaning and Inspection in Part 21-01.

Removal

1. Disconnect the transmission from the engine and slide it to the rear as outlined in Group 16.
2. Remove the pressure plate and cover assembly and the clutch disc as outlined in Group 16.
3. Remove the pilot bushing (Fig. 29).

Installation

1. Coat the pilot bushing bore in the crankshaft with a small quantity of wheel bearing lubricant. Avoid using too much lubricant as it may be thrown onto the clutch disc when the clutch rotates.
2. Install the pilot service bearing (Fig. 30).
3. Install the clutch disc and the pressure plate assembly as outlined in Group 16.
4. Connect the transmission to the engine as outlined in Group 16.

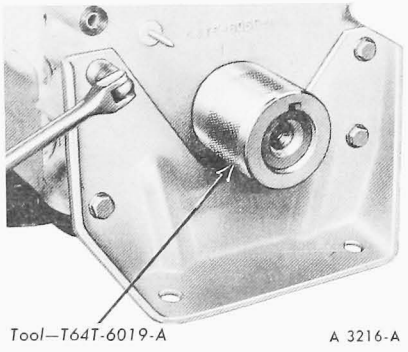

FIG. 24 Aligning Cylinder Front Cover

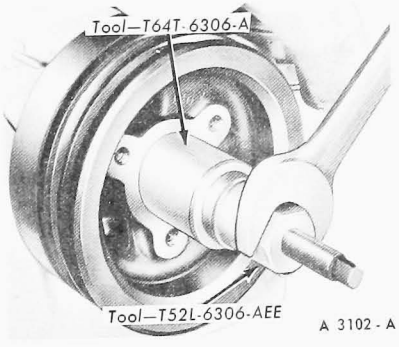

FIG. 25 Installing Crankshaft Damper

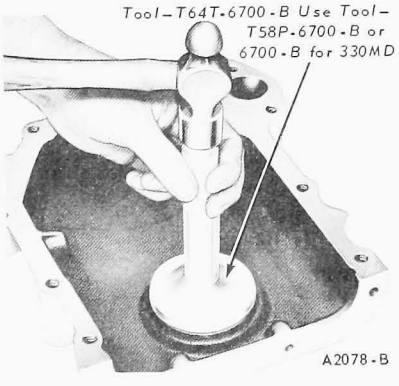

FIG. 26 Installing Front Oil Seal

CAMSHAFT REAR BEARING BORE PLUG

Removal

1. Remove the transmission, following the procedure in Group 16 (standard transmission) or Group 17 (automatic transmission).
2. Remove the flywheel housing. Remove the flywheel attaching bolts and remove the flywheel. Remove the engine rear cover plate.
3. Follow the instructions in Part 21-01 under Core Plug Replacement to install the plug.

Installation

1. Install the engine rear cover plate. Install the flywheel. Install the flywheel housing.
2. Install the transmission, following the procedures in Group 16 (standard transmission) or Group 17 (automatic transmission).

OIL PAN AND OIL PUMP

Removal

1. Drain the crankcase and remove the oil level dipstick and the dipstick tube.
2. Remove the oil pan attaching bolts and lower the oil pan to the axle. Position the crankshaft so that the counterweight will clear the oil pan.
3. Remove the oil pump and the inlet tube attaching bolts. Place the oil pump, inlet tube screen and intermediate drive shaft in the oil pan. Remove the oil pan and oil pump.

Refer to Part 21-01 for the cleaning and inspection procedures.

Installation

1. Clean the oil pan and block gasket surfaces. Position a new gasket on the oil pan.
2. Remove the inlet tube screen from the oil pump. Clean the oil pump and inlet tube screen. Position a new oil pump inlet tube gasket on the oil pump and install the inlet tube. Prime the oil pump by filling the inlet port with engine oil. Rotate the pump shaft to distribute the oil within the pump body.
3. Place the oil pump in the oil pan and position the oil pan on the crossmember. Position a new oil pump gasket on the cylinder block. Insert the intermediate drive shaft into the oil pump housing and install the oil pump and shaft as an assembly (Fig. 31). **Do not attempt to force the pump into position if it will not seal readily. The drive shaft hex may be misaligned with the distributor shaft.** To align, rotate the intermediate shaft into a new position. Torque the oil pump and inlet tube attaching bolts to specifications.
4. Hold the oil pan in place against the cylinder block and install an

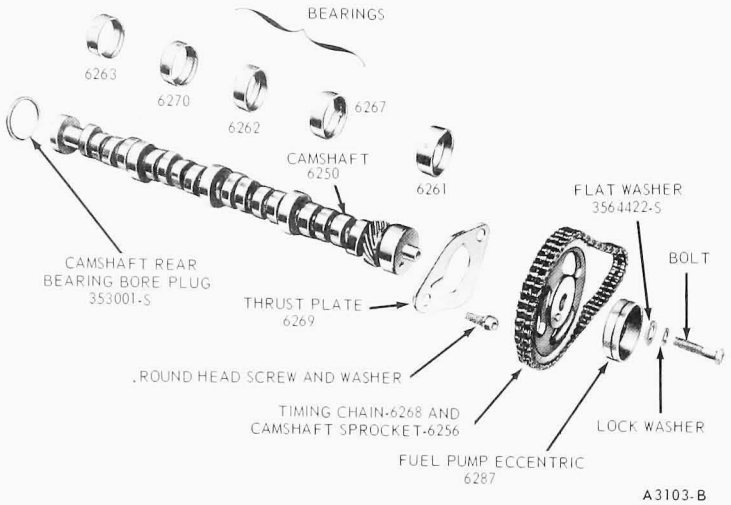

FIG. 27 Camshaft and Related Parts

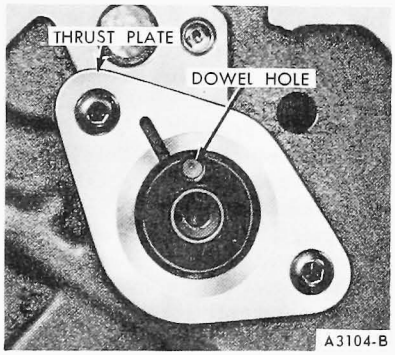

FIG. 28 Camshaft Thrust Plate Installed

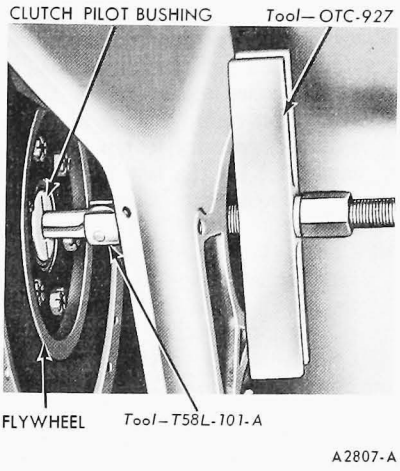

FIG. 29 Removing Clutch Pilot Bushing

attaching bolt on each side of the oil pan. Install the remaining screws, and torque them, from the center outward, to specifications. Install the dipstick tube and dipstick.

5. Replace the engine oil filter element. Fill the crankcase with the proper grade and quantity of engine oil. Operate the engine and check for leaks.

CRANKSHAFT REAR OIL SEAL

Replacement of a crankshaft rear oil seal to correct for oil leaks requires replacement of both the upper and lower seals, as follows:

Removal

1. Remove the oil pan and oil pump (as required), following the procedures in this Section.
2. Loosen all the main bearing cap bolts, thereby lowering the crankshaft slightly but not to exceed 1/32 inch.
3. Remove the rear main bearing cap, and remove the oil seal from the bearing cap and cylinder block. On the block half of the seal, install a small metal screw in one end of the seal and pull on the screw to remove the seal. **Exercise caution to prevent scratching or damaging the crankshaft seal surfaces.**

Installation

1. Carefully clean the seal grooves in the cap and block with a brush and solvent.
2. Dip the seal halves in clean engine oil.
3. Carefully install the upper seal (cylinder block) into its groove with the lip of seal toward the FRONT of the engine (Fig. 32), by rotating it on the seal journal of the crankshaft until the seal protrudes approximately 3/8 inch below the parting surface.

Be sure no rubber has been shaved from the outside diameter of the seal by the bottom edge of the groove.

4. Tighten the remaining bearing cap bolts and torque to specifications.
5. Install the lower seal in the rear main bearing cap with undercut side of seal toward the FRONT of the engine (Fig. 32). Allow the seal to protrude approximately 3/8 inch

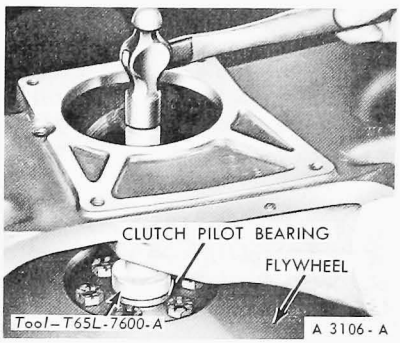

FIG. 30 Installing Clutch Pilot Bearing

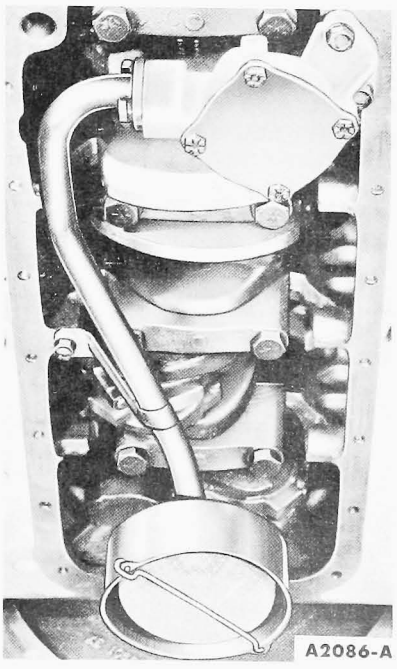

FIG. 31 Oil Pump and Inlet Tube Installed—Typical

above the parting surface to mate with the upper seal when the cap is installed.

6. Apply a thin coating of oil-resistant sealer to the rear main bearing cap at the rear of the top mating surface. **Do not apply sealer to the area forward of the side seal groove. Install the rear main bearing cap. Torque the cap bolts to specifications.**
7. Dip the side seals in light engine oil, then immediately install them in the grooves. Do not use sealer on the side seals. **The seals are designed to expand when dipped in oil. Using sealer may retard this expansion.** It may be necessary to tap the seals into place for the last 1/2 inch of travel. Do not cut the seal projecting ends.
8. Check the retainer side seals for leaks by squirting a few drops of oil into the parting lines between the rear main bearing cap and the cylinder block from the outside. Blow compressed air against the seals from the inside of the block. If air bubbles appear in the oil, it indicates possible oil leakage. **This test should not be performed on newly installed seals until sufficient time has been allowed for the seals to expand into the seal grooves.**
9. Install the oil pump and oil pan. Install the oil level dipstick. Fill the crankcase with the proper amount and viscosity oil.
10. Operate the engine and check for oil leaks.

MAIN BEARING

The main bearing inserts are selective fit. Refer to the procedures under Fitting Main and Connecting Rod Bearings in Part 21-01.

Removal

1. Drain the crankcase. Remove the oil level dipstick. Remove the oil pan and oil pump. Remove the spark plugs to allow easy rotation of the crankshaft.
2. **Replace one bearing at a time leaving the other bearings securely fastened.** Remove the main bearing cap to which new bearings are to be installed.
3. Insert the upper bearing removal tool (Tool 6331-E) in the oil hole in the crankshaft.
4. Rotate the crankshaft in the direction of engine rotation to force the bearing out of the block.
5. Clean the crankshaft journal and bearing inserts. Refer to Part 21-01 for the recommended cleaning and inspection procedures.

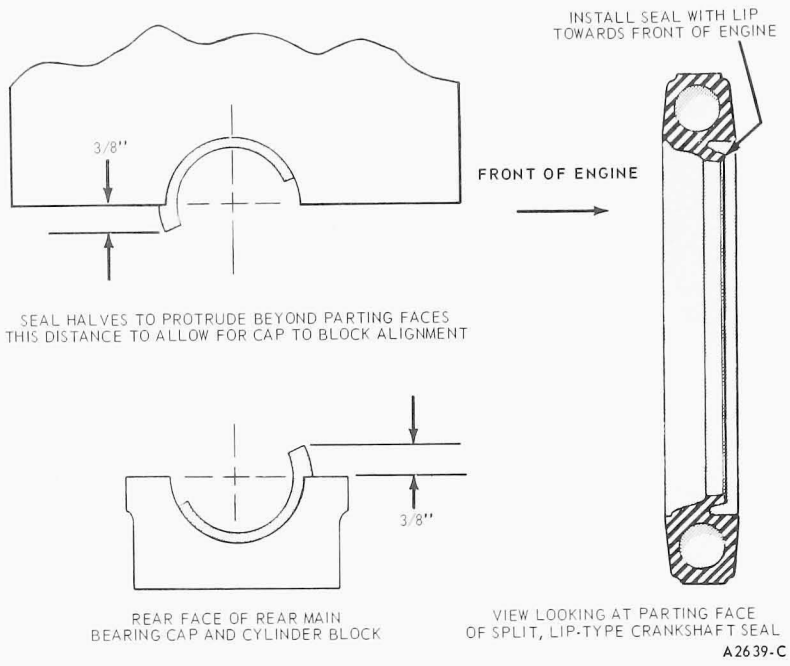

FIG. 32 Installing Crankshaft Rear Seal

Installation

1. Place the plain end of the bearing over the shaft on the locking tang side of the block and partially install the bearing so that tool 6331-E can be inserted in the oil hole in the crankshaft. With tool 6331-E positioned in the oil hole in the crankshaft, rotate the crankshaft in the opposite direction of engine rotation until the bearing seats itself. Remove the tool.
2. Replace the bearing cap. Select-fit the bearing for proper clearance,following procedure given under Fitting Main and Connecting Rod Bearings in Part 21-01.
3. After the bearing has been checked and found to be satisfactory, apply a light coat of SE engine oil to the journal and bearings, then install the bearing cap. Torque the cap bolts to specifications.
4. Repeat the procedure for the remaining bearings that require replacement. If the thrust bearing (No. 3) is being replaced, install the bearing cap with the bolts fingertight. Pry the crankshaft forward against the thrust surface of the upper half of the bearing (Fig. 33). Hold the crankshaft forward and pry the thrust bearing cap to the rear. This will align the thrust surfaces of both halves of the bearing. Retain the forward pressure on the crankshaft. Torque the cap bolts to specifications.
5. If the rear main bearing is replaced, remove the rear main bearing cap. Remove and discard the rear seal and side seals.
6. Clean the rear journal oil seal grooves in the block and cap.
7. Install a new rear oil seal in the rear main bearing cap and block, following the procedures under Crankshaft Rear Oil Seal Replacement.
8. Apply a thin coating of oil-resistant sealer to the rear main bearing cap at the rear of the top mating surface. **Do not apply sealer to the area forward of the side seal groove. Install the rear main bearing cap. Torque the cap bolts to specifications.**
9. Dip the side seals in light engine oil, then immediately install them in the grooves. **Do not use sealer on the side seals. The seals are designed to expand when dipped in oil. Using sealer may retard this expansion.** It may be necessary to tap the seals into place for the last 1/2 inch of travel. Do not cut the seal projecting ends.
10. Check the retainer side seals for leaks by squirting a few drops of oil into the parting lines between the rear main bearing cap and the cylinder block from the outside. Blow compressed air against the seals from the inside of the block. If air bubbles appear in the oil, it indicates possible oil leakage. **This test should not be performed on newly installed seals until sufficient time has been allowed for the seals to expand into the seal grooves.**

11. Disassemble, clean and assemble the oil pump if necessary. Clean the oil pump screen.
12. Prime the pump by pouring oil into the inlet opening and rotating the shaft until the pump is full. Install the oil pump and oil pan. Install the oil level dipstick. Fill the crankcase with the proper amount and viscosity of oil. Install the spark plugs.
13. Operate the engine and check for oil leaks.

CONNECTING ROD BEARINGS

The connecting rod bearings are selective fit. Refer to the procedures under Fitting Main and Connecting Rod Bearings in Part 21-01.

Removal

1. Drain the crankcase and remove the oil level dipstick. Remove the oil pan and oil pump. Remove the spark plugs to allow easy rotation of the crankshaft.
2. Turn the crankshaft until the connecting rod to which new bearings are to be fitted is down.
3. Remove the connecting rod cap. Push the connecting rod up into the cylinder and remove the bearing insert from the rod and cap.
4. Clean the crankshaft journal, rod bearing inserts and cap. Refer to Part 21-01 for the recommended cleaning and inspection procedures.

Installation

1. Install the new bearings in the connecting rod and cap. Pull the connecting rod assembly down firmly on the crankshaft journal. Select-fit the bearing for proper clearance, following procedures given under Fitting Main and Connecting Rod Bearings in Part 21-01.
2. After the bearing clearance has been checked and found to be satisfactory, apply a light coat of SE engine oil to the journal and bearings. Install the connecting rod cap.
3. Repeat the procedure for the remaining connecting rods that require new bearings.
4. Follow steps 11, 12 and 13 under Main Bearing Replacement.

PISTONS AND CONNECTING RODS

Removal

1. Drain the cooling system and the crankcase. Remove the intake manifold, cylinder heads, oil pan and oil pump following the procedures in this Section.
2. Remove any ridge and/or deposits from the upper end of the cylinder bores as follows:

Turn the crankshaft until the piston to be removed is at the bottom of its travel and place a cloth on the piston head to collect the cuttings. Remove any ridge and/or deposits from the upper end of the cylinder bores. Remove the cylinder ridge with a ridge cutter. Follow the instructions furnished by the tool manufacturer. **Never cut into the ring travel area in excess of 1/32 inch when removing ridges.**

3. Make sure all connecting rod caps are marked so that they can be installed in their original locations.
4. Turn the crankshaft until the connecting rod being removed is down.
5. Remove the connecting rod cap.
6. Push the connecting rod and piston assembly out the top of the cylinder with the handle end of a hammer. **Avoid damage to the crankshaft journal or the cylinder wall when removing the piston and rod.**
7. Remove the bearing inserts from the connecting rod and cap.
8. Install the cap on the connecting rod from which it was removed.

Installation

1. If new piston rings are to be installed in used bores, remove the cylinder wall glaze (Part 21-01). Follow the instructions of the tool manufacturer. After performing the cylinder bore repairs, clean the bore(s), following the procedure in Part 21-01.
2. Oil the piston rings, pistons and cylinder walls with light engine oil. Be sure to install the pistons in the same cylinders from which they were removed, or to which they were fitted. The connecting rod and bearing cap are numbered from 1 to 4 in the right bank and from 5 to 8 in the left bank, beginning at the front of the engine. The numbers on the connecting rod and bearing cap must be on the same side when installed in the cylinder bore. If a connecting rod is ever transferred from one block or cylinder to another, new bearings should be fitted and the connecting rod should be numbered to correspond with the new cylinder number.
3. Turn the crankshaft throw to the bottom of its stroke.
4. Make sure the ring gaps are properly spaced around the circumference of the piston (Fig. 34 or 35).
5. Install a piston ring compressor on the piston and push the piston in with a hammer handle until it is slightly below the top of the cylinder (Fig. 36). Be sure to guide the connecting rods to avoid damaging the crankshaft journals. Install the

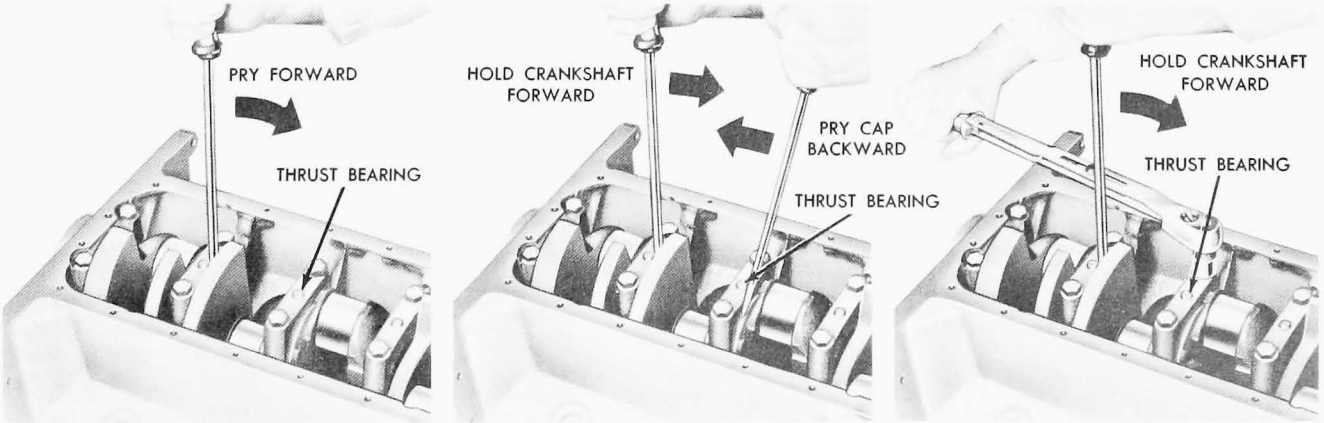

FIG. 33 Aligning Thrust Bearing

piston with the identification in the piston head toward inside of engine V.

6. Check the clearance of each bearing, following the procedure under Connecting Rod Bearing Replacement.
7. After the bearings have been fitted, apply a light coat of SE engine oil to the journals and bearings.
8. Push the piston all the way down until the connecting rod bearing seats on the crankshaft journal. Install the connecting rod cap. Torque the nuts to specifications.
9. After the piston and connecting rod assemblies have been installed, check the side clearance between the connecting rods on each crankshaft journal (Fig. 37).
10. Disassemble, clean and assemble the oil pump. Clean the oil pump inlet tube screen and the oil pan and block gasket surfaces.
11. Prime the oil pump by pouring oil into the inlet opening and rotating the shaft until the pump is full. Install the oil pump and the oil pan.
12. Install the cylinder heads by following the procedures under Cylinder Head Installation.
13. Refer to Intake Manifold Installation and install the intake manifold.
14. Fill and bleed the cooling system. Fill the crankcase with the proper grade and quantity of engine oil.
15. Install the air cleaner, operate the engine and check for oil and coolant leaks. Check and adjust the ignition timing.
16. Connect the distributor vacuum line. When engine temperatures become stabilized, adjust the engine idle speed and fuel mixture.

CRANKSHAFT

The crankshaft and related parts are shown in Fig. 38.

Removal

1. Remove the alternator. Remove the spark plugs to allow easy rotation of the crankshaft.
2. Remove the fuel pump. Remove the oil filter. Remove the water pump by-pass hose. On standard-mount fans, remove the water pump and fan as an assembly.

On high-mount fans, remove the fan and hub assembly, then remove the water pump.

3. On low-mount fans, remove the fan from the crankshaft damper. Remove the crankshaft damper cap screw and washer. Install the puller on the damper (Fig. 19) and remove the damper.
4. Loosen the cylinder front cover bolts, then remove the engine front support bracket and alternator brackets.
5. Remove the cylinder front cover.
6. Remove the crankshaft front oil slinger. Check the timing chain deflection, then remove the timing chain and sprockets by following the applicable steps under Cylinder Front Cover Removal.
7. Invert the engine on the work stand. Remove the flywheel. Remove the engine rear cover plate. Remove the oil pan and gasket. Remove the oil pump.
8. **Make sure all bearing caps (main and connecting rod) are marked so that they can be installed in their original locations.** Remove the connecting rod bearing caps. Turn the crankshaft until the connecting rod from which the cap is being removed is down and remove the cap. Push the connecting rod and piston assembly up into the cylinder.
9. Remove the main bearing caps.
10. Carefully lift the crankshaft out of the block so that the thrust bearing surfaces are not damaged. **Handle the crankshaft with care to avoid possible fracture or damage to the finished surfaces.**

Refer to Part 21-01 for the cleaning and inspection procedures.

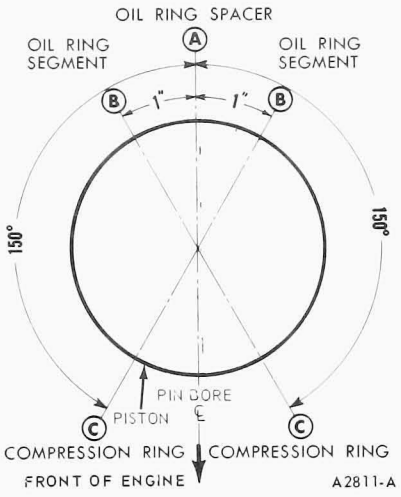

FIG. 34 Piston Ring Gap Spacing — Light Duty

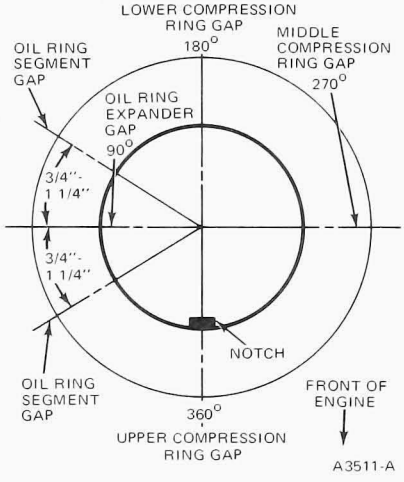

FIG. 35 Piston Ring Gap Spacing — Heavy Duty

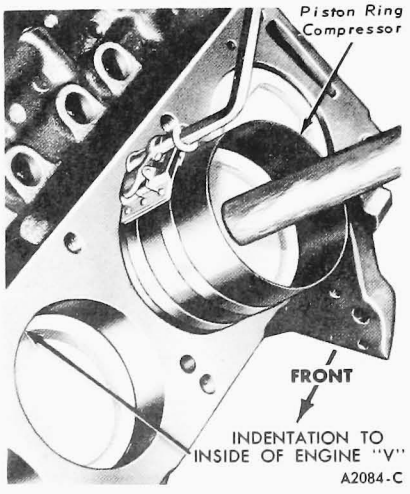

FIG. 36 Piston Installation

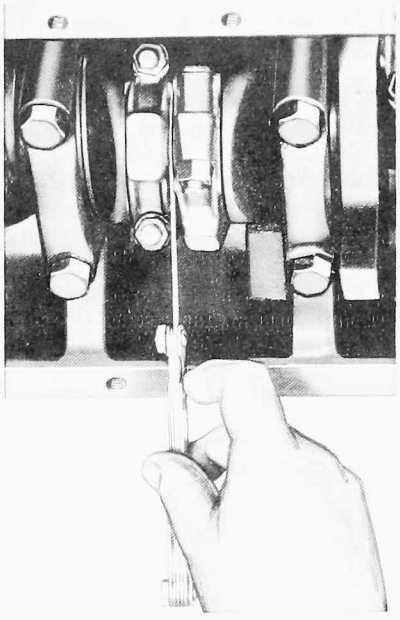

FIG. 37 Checking Connecting Rod Side Clearance

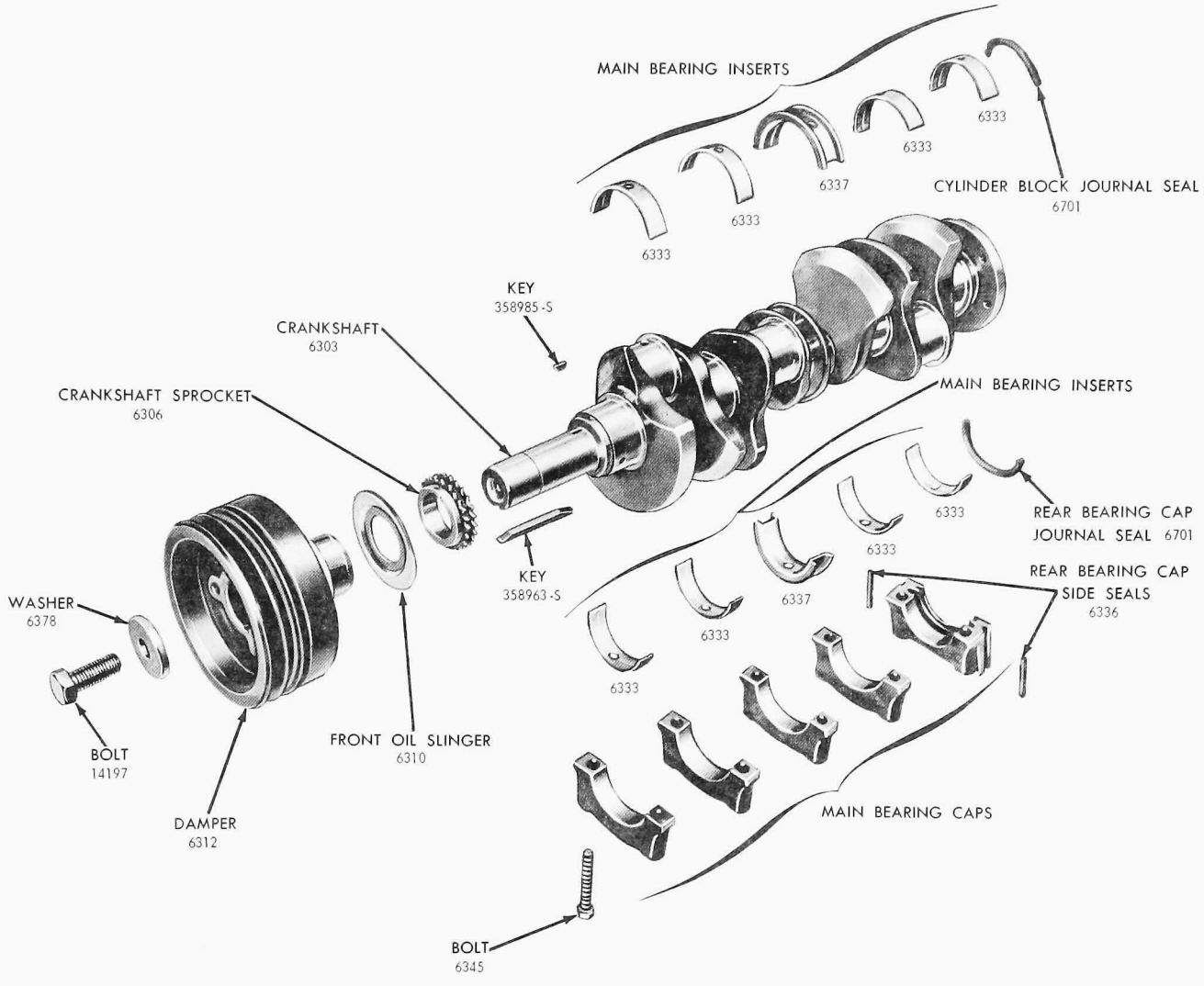

FIG. 38 Crankshaft and Related Parts — Typical

To refinish journals, dress minor imperfections, etc., refer to Part 21-01.

Installation

1. Remove the rear journal oil seal from the block and rear main bearing cap. Remove the rear main bearing cap-to-block side seals.
2. Remove the main bearing inserts from the block and bearing caps.
3. Remove the connecting rod bearing inserts from the connecting rods and caps.
4. If the crankshaft main bearing journals have been refinished to a definite undersize, install the correct undersize bearings. Be sure the bearing inserts and bearing bores are clean. Foreign material under the inserts will distort the bearing and cause a failure.
5. Place the upper main bearing inserts in position in the bores with the tang fitting in the slot provided.

If the oil hole does not line up with the cylinder block oil passage, check the holes with a rod corresponding to the following diameters.

No. 1 Bearing — 7/64 inch
No. 2 Bearing — 9/64 inch
No. 3 Bearing — 9/32 inch
No. 4 Bearing — 5/32 inch
No. 5 Bearing — 9/32 inch

If the rod passes through the bearing and block, sufficient lubrication is assured.

6. Install the lower main bearing inserts in the bearing caps.
7. Dip the seal halves in clean engine oil. Carefully install the upper seal (cylinder block) into its groove with the undercut side of seal toward the FRONT of the engine so that approximately 3/8 inch protrudes above the parting surface.
8. Carefully lower the crankshaft into place. **Be careful not to damage the bearing surfaces.**
9. Select-fit the bearings for proper clearance, following procedures given under Fitting Main and Connecting Rod Bearings in Part 21-01.
10. After the bearings have been fitted, apply a light coat of SE engine oil to the journals and bearings.

Install the lower seal in the rear main bearing cap with the seal lip toward the FRONT of the engine (Fig. 32). Allow the seal to protrude approximately 3/8 inch above the parting surface to mate with the upper seal when the cap is installed.

11. Install all the bearing caps, except the thrust bearing cap (No. 3 bearing). Be sure that the main bearing caps are installed in the original locations. Torque the bearing cap bolts to specifications.

12. Dip the side seals in light engine oil, then immediately install them in the grooves. **Do not use sealer on the side seals. The seals are designed to expand when dipped in oil. Using sealer may retard this expansion.** It may be necessary to tap the seals into place for the last 1/2 inch of travel. Do not cut the seal projecting ends.
13. Check the retainer side seals for leaks by squirting a few drops of oil into the parting lines between the rear main bearing cap and the cylinder block from the outside. Blow compressed air against the seals from the inside of the block. If air bubbles appear in the oil, it indicates possible oil leakage. **This test should not be performed on newly installed seals until sufficient time has been allowed for the seals to expand into the seal grooves.**
14. Install the thrust bearing cap with the bolts fingertight.
15. Pry the crankshaft forward against the thrust surface of the upper half of the bearing (Fig. 33).
16. Hold the crankshaft forward and pry the thrust bearing cap to the rear (Fig. 33). This will align the thrust surfaces of both halves of the bearing.
17. Retain the forward pressure on the crankshaft. Torque the cap bolts to specifications.
18. Check the crankshaft end play by following the procedure in Part 21-01.
19. Install new bearing inserts in the connecting rods and caps. Check the clearance of each bearing, following the procedure under Main Bearing Replacement.
20. After the connecting rod bearings have been fitted, apply a light coat of engine oil to the journals and bearings.
21. Turn the crankshaft throw to the bottom of its stroke. Push the piston all the way down until the rod bearing seats on the crankshaft journal.
22. Install the connecting rod cap. Torque the nuts to specifications.
23. After the piston and connecting rod assemblies have been installed, check the side clearance between the connecting rods on each connecting rod crankshaft journal (Fig. 37).
24. Clean the oil pan, oil pump and oil pump screen. Prime the oil pump by pouring oil into the inlet opening and rotating the shaft until the pump is full. Install the oil pump and oil pan.

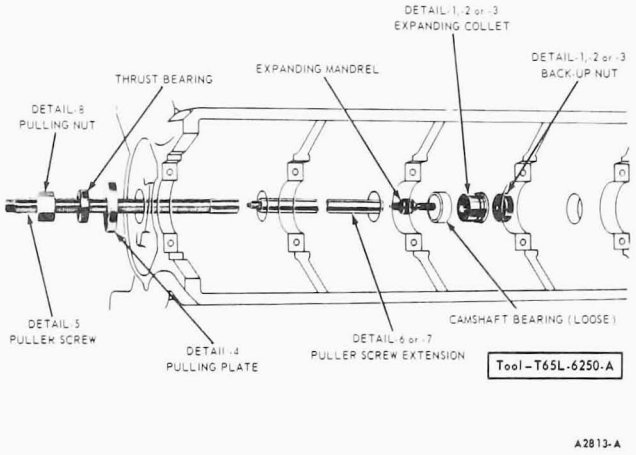

FIG. 39 Replacing Camshaft Bearing

25. Install the engine rear cover plate. Position the flywheel on the crankshaft. Install the attaching bolts. Torque the bolts to specifications.
26. Install the timing chain and sprockets, cylinder front cover and crankshaft damper, following the applicable steps under Cylinder Front Cover Installation.
27. Install the oil filter, fuel pump and carburetor fuel inlet line. Install the alternator. Install the spark plugs.
28. Install the engine in the vehicle.

CAMSHAFT BEARING

Camshaft bearings are available prefinished to size for standard and 0.015-inch undersize journal diameters. The bearings are not interchangeable from one bore to another.

Removal

1. Remove the camshaft, the flywheel and the crankshaft. Push the pistons to the top of the cylinders.
2. Remove the camshaft rear bearing bore plug. Remove the camshaft bearings (Fig. 39).

If the camshaft bearings are being removed with the tool shown in Fig. 39, the following procedure will apply. Select the proper size expanding collet and back-up nut and assemble on the expanding mandrel. With the expanding collet collapsed, install the collet assembly in the camshaft bearing, and tighten the back-up nut on the expanding mandrel. Tighten the pulling nut against bearing. Assemble the puller screw and extension (if necessary) as shown and install on the expanding mandrel. Tighten the pulling nut against the thrust bearing and pulling plate to remove the camshaft bearing. Repeat the procedure for each bearing. To remove the front bearing, install the puller screw from the rear of the cylinder block.

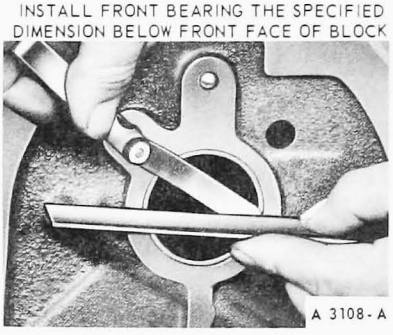

FIG. 40 Measuring Camshaft Front Bearing

Installation

1. Position the new bearings at the bearing bores, and press them in place with the tool shown in Fig. 39. Be sure to center the pulling plate and the puller screw to avoid damage to the bearing. Wrap a cloth around the threads of the puller screw to protect the front bearing or journal. **Failure to use the correct**

expanding collet can cause severe bearing damage. Align the oil holes in the bearings with the oil holes in the cylinder block when the bearings are installed. **Be sure the front bearing is installed the specified distance below the front face of the cylinder block (Fig. 40).**

2. Install the camshaft rear bearing bore plug as detailed in Part 21-01.
3. Install the camshaft, crankshaft, flywheel and related parts. Install the engine in the vehicle.

OIL FILTER

SPIN-ON TYPE

The spin-on type oil filter assembly is shown in Fig. 41.

Removal

1. Place a drip pan under the filter.
2. Unscrew the filter from the adapter fitting. Clean the adapter filter recess.

Installation

1. Coat the gasket on the new filter with oil. Place the filter in position on the adapter. Hand tighten the filter until the gasket contacts the adapter face. Then advance it 1/2 turn.
2. Operate the engine at fast idle and check for leaks. If oil leaks are evident, perform the necessary repairs to correct the leakage. Check the oil level and fill the crankcase if necessary.

CARTRIDGE-TYPE

The replaceable cartridge-type filter is shown in Fig. 42.

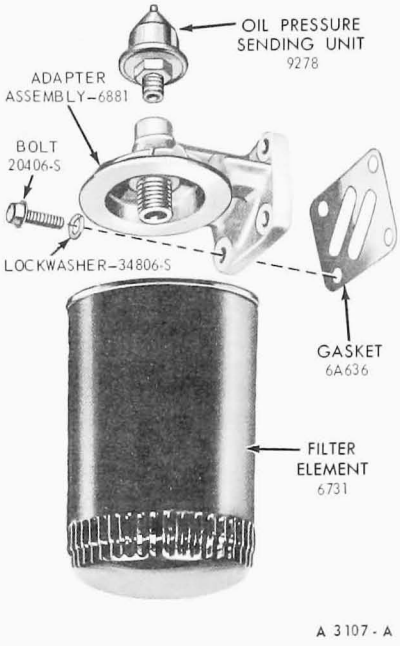

FIG. 41 Typical Oil Filter Assembly — Light Duty

Removal

1. Place a drip pan under the filter. Remove the filter center bolt and remove the filter assembly.
2. Remove the large gasket from filter mounting adapter.
3. Remove the small upper gasket, the replaceable cartridge, and the small lower gasket from the inside of the filter.
4. Remove the center bolt from the filter case, and remove the fiber gasket from the bolt.

Installation

1. Clean the mounting adapter recess, apply grease to a new gasket and position the gasket in the adapter recess.
2. Clean the filter case in solvent and wipe it dry. Position a new fiber gasket on the center bolt and position the bolt in the filter case.
3. Position the new lower gasket, filter cartridge and upper gasket in the filter case.
4. Install the filter assembly and torque the center bolt to specifications.
5. Operate the engine at fast idle and check for leaks. If oil leaks are evident, perform the necessary repairs to correct the leakage. Check the oil level and fill the crankcase if necessary.

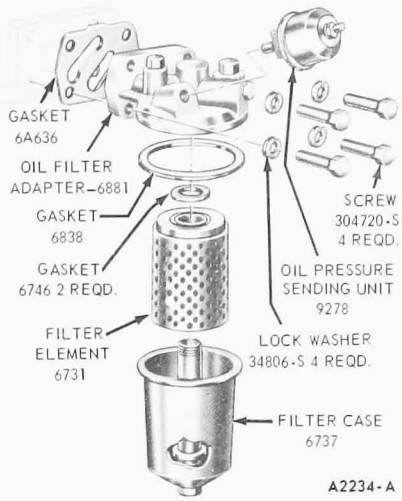

FIG. 42 Cartridge-Type Oil Filter and Adapter Mounting — Heavy Duty

DISASSEMBLY AND ASSEMBLY

When installing nuts or bolts (refer to torque specifications), oil the threads with lightweight engine oil. **Do not oil threads that require oil-resistant or water-resistant sealer.**

ENGINE ASSEMBLY

Disassembly

1. Remove the distributor cap and spark plug wire assembly.
2. Disconnect the distributor vacuum line at the distributor. Remove the carburetor fuel inlet line. Remove the fuel pump and discard the gasket.
3. Remove the water pump by-pass hose Remove the crankcase ventilation regulator valve and exhaust tube assembly. Remove the valve rocker arm covers.

Starting at the No. 4 cylinder, loosen the right rocker arm shaft support bolts in sequence, two turns at a time. After the bolts are all loosened remove the valve rocker arm shaft assembly and the oil baffle plate. Starting at the No. 5 cylinder, follow the same procedure on the left valve rocker arm shaft support bolts.

4. Remove the valve push rods in sequence and put them in a rack so that they can be installed in their original bores.
5. Remove the distributor hold-down bolt and clamp and remove the distributor.
6. Remove the intake manifold attaching bolts.
7. Install standard eye bolts with 5/16-18 threads in the left front and right rear rocker arm cover holes and attach the engine lifting sling (Fig. 12).
8. Raise the intake manifold and carefully remove it from the engine. Discard the intake manifold gaskets and seals.
9. Remove the baffle plate from the valve push rod chamber floor by prying up on the baffle with a screw driver (Fig. 43).
10. Using Tool T70P-14151, lift the

valve lifters from the cylinder block and place them in a rack so that they can be installed in their original bores (Fig. 18). The internal parts of each hydraulic valve lifter assembly are matched sets. Do not intermix the parts. Keep the assemblies intact until they are to be cleaned.

11. Remove the exhaust manifolds and the spark plugs.
12. Loosen the cylinder head bolts in sequence: remove them and install the cylinder head holding fixtures.
13. Lift the cylinder heads off the block. **Do not pry between the head and the block.** Discard the cylinder head gaskets.
14. Remove the oil filter. Remove the oil filter adapter assembly and oil pressure sending unit as an assembly. Discard the gasket.
15. Remove the alternator and drive belts.
16. Remove the water pump and fan.
17. Remove the crankshaft damper (Fig. 19) and the crankshaft sleeve (Fig. 20).
18. Loosen the cylinder front cover attaching bolts, then remove the engine front support bracket and alternator brackets.
19. Remove the cylinder front cover. Discard the gasket. Remove the crankshaft front oil slinger.
20. Check the timing chain deflection by following the procedure in Part 21-01.
21. Remove the camshaft sprocket cap screw and the fuel pump eccentric. Remove the crankshaft sprocket key. Remove the sprockets and timing chain as an assembly (Fig. 22).
22. Remove any ridge and/or carbon deposits from the upper end of the cylinder bores. Move the piston to the bottom of its travel and place a cloth on the piston head to collect the cuttings. Remove the cylinder ridge with a ridge cutter. Follow the instructions furnished by the tool manufacturer. **Never cut into the ring travel area in excess of 1/32 inch when removing ridges.** After the ridge has been removed, remove the cutter from the cylinder bore.
23. Remove the flywheel. Remove the engine rear cover plate.
24. Invert the engine. Remove the oil pan. Discard the gasket.
25. Remove the oil pump and inlet tube as an assembly. Remove the oil pump drive shaft. Discard the oil pump gasket.
26. **Make sure all connecting rods and caps are marked so that they can be installed in the original locations. Turn the crankshaft until the connecting rod being removed is down. Remove the rod cap.**
27. Push the connecting rod and piston assembly out of the top of the cylinder with the handle end of a hammer. Avoid damage to the crankpin or the cylinder wall when removing the piston and rod.
28. Remove the bearing inserts from the connecting rods and caps. Install the rod caps on the connecting rods from which they were removed.
29. Remove the main bearing caps.
30. Carefully lift the crankshaft out of the cylinder block so that the thrust bearing surfaces are not damaged. **Handle the crankshaft with care to avoid possible fracture or damage to the finished surfaces.**
31. Remove the rear journal oil seal from the block and rear bearing cap, and remove the cap-to-block side seals.
32. Remove the main bearing inserts from the block and bearing caps. Install the main bearing caps in their original positions.
33. Remove the camshaft thrust plate and spacer. Carefully remove the camshaft by pulling it toward the front of the engine. Use caution to avoid damaging the journals and lobes.
34. Remove the camshaft rear bearing bore plug. Remove the camshaft bearings.

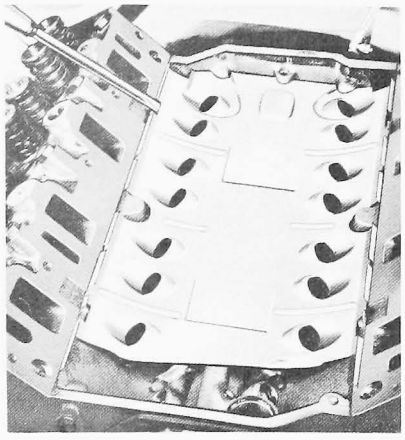

A3160-A

FIG. 43 Removing Baffle Plate

For cleaning and inspection procedures, refer to Part 21-01.

Assembly

Many of the procedures given here are condensed from other sections of this Group. For more detailed steps, refer to the index at the beginning of this part or Part 21-01. These indexes will show the pages on which more detailed instructions can be found.

If the cylinder block is to be replaced, transfer the cylinder head dowels and cylinder block drain plugs to the new cylinder block. Also, omit steps 1 thru 6 below, if a new cylinder block is used.

1. Remove the glaze from the cylinder bores (Part 21-01).
2. Invert the engine on the work stand.
3. Position the new camshaft bearings at the bearing bores, and press them in place. Align the oil holes in the cylinder block when the bearings are installed. **Be sure the camshaft front bearing is installed 0.005-0.020 inch below the front face of the cylinder block (Fig. 40).**
4. Clean out the camshaft rear bearing bore plug recess thoroughly.
5. Coat the flange of a new plug with oil-resistant sealer and install it with the flange facing inward.
6. Drive the plug in until it is flush or slightly below the casting surface.
7. Oil the crankshaft journals and apply Lubriplate to all lobes, then carefully install the camshaft and thrust plate following the procedure under Camshaft Installation.
8. Clean the rear journal oil seal groove and the mating surfaces of the block and rear main bearing cap. Dip the seal halves in clean engine oil. Carefully install the upper seal (cylinder block) into its groove with the undercut side of seal toward the FRONT of the engine (Fig. 32), and approximately 3/8 inch protrudes above the parting surface.
9. If the crankshaft main bearing journals have been refinished to a definite undersize, install the correct undersize bearings. Be sure the bearing inserts and bearing bores are clean. Foreign material under the inserts will distort the bearing and cause a failure.

Place the upper main bearing inserts in position in the bore with the tang fitting in the slot provided.

10. Install the lower main bearing inserts in the bearing caps.
11. Carefully lower the crankshaft into place. **Be careful not to damage the bearing surfaces.**
12. Check the clearance of each main bearing, following the procedure under Main Bearing Replacement.
13. After the bearings have been fitted, apply a light coat of engine oil to the journals and bearings.
14. Be sure that the oil seal grooves in the rear main bearing cap are clean. Install the lower seal in the rear main bearing cap with the seal lip toward the FRONT of the engine (Fig. 32). Allow the seal to protrude approximately 3/8 inch above the

parting surface to mate with the upper seal when the cap is installed. Apply a thin coating of oil-resistant sealer to the rear of the top mating surface. **Do not apply sealer to the area forward of the side seal groove. Install the rear main bearing cap and the remainder of the caps, except the thrust bearing cap (No. 3 bearing).** Be sure that the main bearing caps are installed in their original locations. **Torque the bearing cap bolts to specifications.**

15. Dip the side seals in light SE engine oil, then immediately install them in the grooves. **Do not use sealer on the side seals. The seals are designed to expand when dipped in oil. Using sealer may retard this expansion.** It may be necessary to tap the seals into place for the last 1/2 inch of travel. Do not cut the seal projecting ends.

Check the retainer side seals for leaks by squirting a few drops of oil into the parting lines between the rear main bearing cap and the cylinder block from the outside. Blow compressed air against the seals from the inside of the block. If air bubbles appear in the oil, it indicates possible oil leakage. **This test should not be performed on newly installed seals until sufficient time has been allowed for the seals to expand into the seal grooves.**

16. Install the thrust bearing cap and check crankshaft end play by following the applicable steps under Crankshaft Installation.
17. Turn the engine on the work stand so that the front end is up.
18. Install the pistons and connecting rods, following the recommended procedure under Piston and Connecting Rod Installation.
19. Position the sprockets and timing chain on the camshaft and crankshaft (Fig. 22). Be sure the timing marks on the sprockets are positioned as shown in Fig. 21.
20. Lubricate the timing chain and sprockets with engine oil.
21. Install the fuel pump eccentric (Fig. 23) and the camshaft sprocket cap screw. Torque the sprocket cap screw to specifications. Install the crankshaft front oil slinger.
22. Clean the cylinder front cover and the cylinder block gasket surfaces. Install a new crankshaft front oil seal (Fig. 26).
23. Coat the gasket surface of the block and cylinder front cover and the cover bolt threads with oil-resistant sealer. Position a new gasket on the block.
24. Install the alignment pilot tool on the cylinder front cover so that the keyway in the pilot aligns with the key in the crankshaft. Position the cover and pilot over the end of the crankshaft and against the block (Fig. 24).
25. Position the engine front support bracket and alternator brackets on the cylinder front cover. Install the cylinder front cover bolts fingertight. Align the oil pan gasket surfaces on the cylinder block and front cover. While pushing in on the pilot tool, torque the cover bolts to specifications. Remove the pilot.
26. Lubricate the crankshaft with a white lead and oil mixture and lubricate the oil seal rubbing surface with grease.
27. Line up the damper keyway with the key on the crankshaft, and install the damper on the crankshaft (Fig. 25). Install the damper cap screw and washer, and torque the screw to specifications.
28. Clean the water pump gasket surfaces and apply sealer. Position new gaskets on the pump and install the water pump and fan as an assembly.
29. On a high-mount fan, install the fan and hub after the water pump is installed.
30. On a low-mount fan, install it on the crankshaft damper.
31. Using a new gasket, install the fuel pump. Install the alternator and drive belts.
32. Turn the engine on the work stand so that the top of the engine is up.
33. Clean the cylinder head and block gasket surfaces. Guided by the word FRONT on the gasket install the head gasket over the cylinder head dowels.
34. Place the cylinder head on the engine, and remove the holding fixtures. Oil the head bolt threads and install the bolts.
35. The cylinder head bolt tightening procedure is performed in three progressive steps. Torque the bolts in sequence (Fig. 15) to specifications. When the cylinder head bolts have been tightened by this procedure, it is not necessary to retorque the bolts after extended operation.
36. Coat the mating surfaces of the exhaust manifolds with a light film of graphite grease.
37. Position a new gasket over the muffler inlet pipe studs of the exhaust manifolds.
38. Position the exhaust manifolds on the cylinder heads and install the retaining bolts and tab washers. Torque the retaining bolts to specifications, working from the center to the end. Lock the bolts by bending one tab of the washer over a flat on the bolt.
39. Install the spark plugs.
40. Use the hydraulic valve lifter leakdown tester (Part 21-01) to fill the lifters with test fluid. Coat the outside of each valve lifter with engine oil to provide initial lubrication. Place each lifter in the bore from which it was removed.
41. Install the baffle plate in the valve push rod chamber. Position one side of the baffle plate and press the other side into place.
42. Clean the mating surfaces of the intake manifold, cylinder heads and cylinder block.
43. Coat the cylinder block seal surfaces with quick setting contact adhesive.
44. Position new seals on the cylinder block and new gaskets on the cylinder heads. Position the gasket slots in the end tabs over the ribs on the seals. Be sure the holes in the gaskets are aligned with the holes in the cylinder heads. The correct installation of the gaskets and seals is shown in Fig. 13. Follow the procedure as described under Intake Manifold Installation.
45. Install the eye bolts in the intake manifold and attach the engine lifting sling and carefully lower the intake manifold on the engine (Fig. 12).
46. Position the intake manifold by temporarily inserting the distributor in place. **After the intake manifold is in place, run a finger around the seal area to make sure the seals are in place. If the seals are not in place, remove the intake manifold and position the seals.**
47. Install the water pump by-pass hose on the intake manifold and on the water pump.
48. Be sure the holes in the manifold gaskets and manifold are in alignment. Install the manifold attaching bolts and torque them to specifications, in sequence as shown in Fig. 14.
49. Remove the distributor and the engine lifting sling and eye bolts.
50. Refer to Valve Rocker Arm Shaft Assembly Installation and install the valve rocker arm shaft assemblies.
51. Rotate the crankshaft damper until the No. 1 piston is on TDC at the end of the compression stroke, then position the distributor in the block with the rotor at the No. 1 firing position and the points open. Install the hold-down clamp.

52. Install the distributor cap. Install the valve rocker arm covers.
53. Install the crankcase ventilation regulator valve in the valve rocker arm cover or oil fill cap and connect the hose.
54. Connect the spark plug wires. Connect the carburetor fuel inlet line and the distributor vacuum line at the carburetor.
55. Invert the engine on the work stand. Position the oil pump drive shaft into the distributor socket. With the shaft firmly seated in the distributor socket, the stop on the shaft should touch the roof of the crankcase. Remove the shaft and position the stop as necessary.
56. With the stop properly positioned, insert the oil pump drive shaft into the oil pump.
57. Prime the oil pump by filling the inlet port with the engine oil. Rotate the pump shaft to distribute the oil within the pump body.
58. Position a new gasket on the pump housing and install the pump and shaft as an assembly. **Do not attempt to force the pump into position if it will not seal readily. The drive shaft hex may be misaligned with the distributor shaft. To align, rotate the intermediate shaft into a new position.**
59. Position a new gasket on the oil pan and place the oil pan assembly on the block. Install the attaching screws and torque them from the center outward to specifications.
60. Install the engine rear cover plate. Position the flywheel on the crankshaft and install the attaching bolts. Torque the bolts alternately to specifications.
61. Clean the oil filter adapter gasket surfaces. Apply sealer to a new adapter gasket, and install the adapter assembly and gasket.
62. Clean the adapter filter recess. Place the filter in position and install it on the adapter. Tighten the center bolt to specification. On 330 MD engines install the spin-on filter by hand tightening until the gasket contacts the adapter face. Then advance it 1/2 turn.
63. Install the engine in the vehicle. Install the air cleaner and operate the engine and check for oil and coolant leaks. Check the ignition timing. Connect the distributor vacuum line to the distributor. Adjust the engine idle speed and idle fuel mixture.

VALVE ROCKER ARM

The valve rocker arm shaft assembly is shown in Fig. 44.

Disassembly

1. Remove the cotter pins from each end of the valve rocker arm shaft. Remove the flat washer and spring washer from each end of the shaft.
2. Slide the rocker arms, spring and supports off the shaft. Be sure to identify all the parts.
3. If it is necessary to remove the plugs from each end of the shaft, drill or pierce one plug. Insert a steel rod through the drilled plug and knock out the plug on the opposite end. Working from the open end, knock out the remaining plug.

Refer to Part 21-01 for the cleaning, inspection and repair procedures.

Assembly

1. Oil all the moving parts with engine oil. Apply Lubriplate to the pad of the valve rocker arms.
2. If the plugs were removed from the ends of the shaft, use a blunt tool or large diameter pin punch and install a plug, cup side out, in each end of the rocker arm shaft.
3. Install the rocker arms, supports, and springs in the order shown in Fig. 44. **Be sure the oil holes in the shaft are facing downward.** When properly assembled, the identification notch (Fig. 11) on the end of the shaft must be downward and toward the front on the right bank and toward the rear on the left bank. Complete the assembly by installing the remaining flat washers and the spring washer, then install the cotter pin.

CYLINDER HEADS

Disassembly

1. Clean the carbon out of the cylinder head combustion chambers before removing the valves.
2. Compress the valve spring (Fig. 45). Remove the spring retainer locks and release the spring.
3. Remove the sleeve, spring retainer, spring, stem oil seal and valve. Discard the valve stem seals. Identify all valve parts.

Refer to Part 21-01 for the cleaning and inspection procedures.

Cylinder head repair procedures and checks such as valve and valve seat refacing, cylinder head flatness checks, etc., are covered in Part 21-01.

Assembly

1. Oil each stem and install each valve in the port from which it was removed or to which it was fitted. Install a new oil seal on the valve stem (Figs. 46 and 47).

Do not install the O-ring type seal

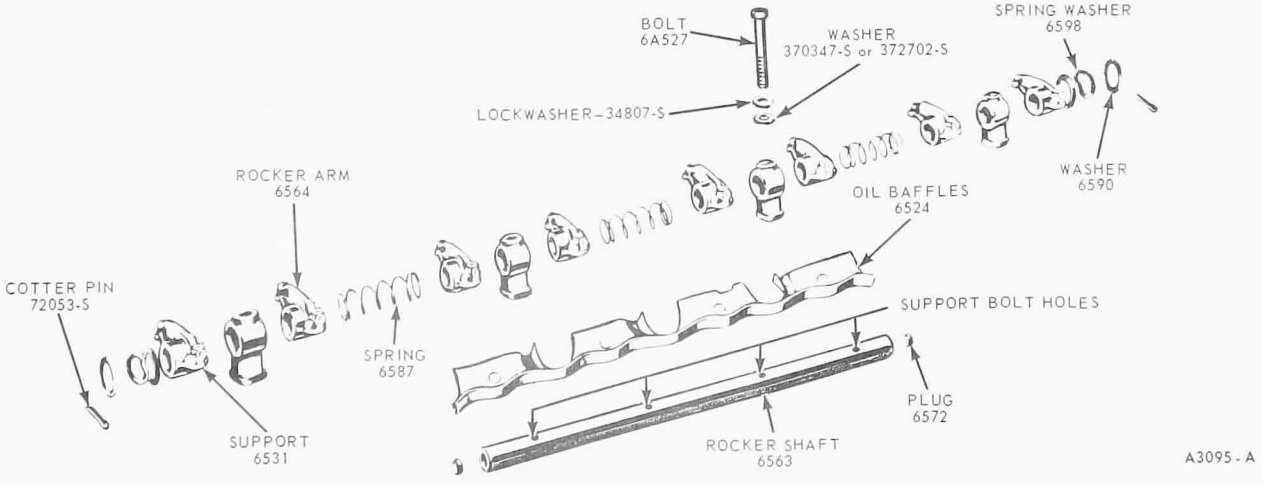

FIG. 44 Valve Rocker Arm Shaft Assembly

on the exhaust valve (Fig. 47) at this time.

2. Install the valve spring over the valve.

LD engines use a damper spring in conjunction with the valve spring (Fig. 47). Use a positive rotating spring retainer on the exhaust valves of all MD and HD engines (Fig. 46).

3. Compress the spring (Fig. 45). If working on a MD or HD engine, apply SE engine oil to the O-ring type seal, then install it on the exhaust valve. Install the retainer locks.
4. Measure the assembled height of the valve spring from the surface of the cylinder head spring pad to the underside of the spring retainer with dividers (Fig. 48). Check the dividers against a scale. If the assembled height is greater than specifications, install the necessary 0.030-inch thick spacer(s) between the cylinder head spring pad and the valve spring to bring the assembled height to the recommended height.

Do not install spacers unless necessary. Use of spacers in excess of recommendations will result in overstressing the vavle springs and overloading the camshaft lobes which could lead to spring breakage and worn camshaft lobes.

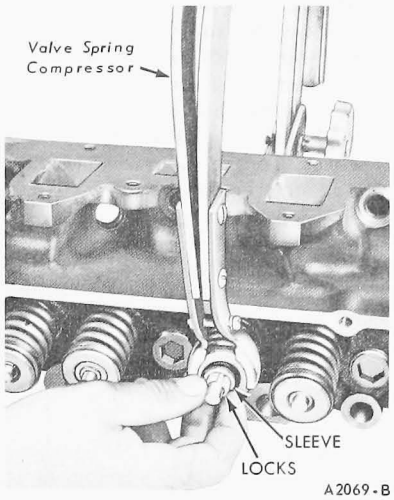

FIG. 45 Compressing Valve Spring — On Bench

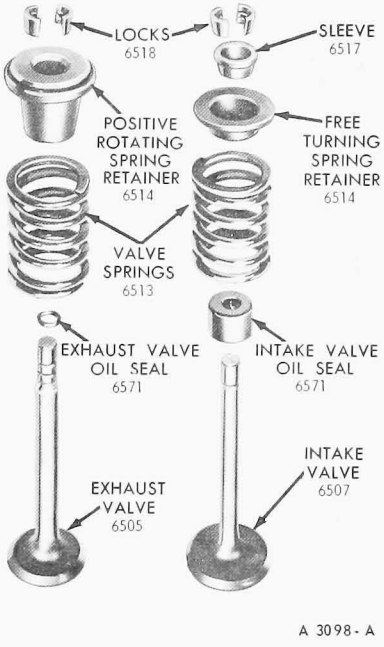

FIG. 46 Valve Assemblies — MD and HD Engines

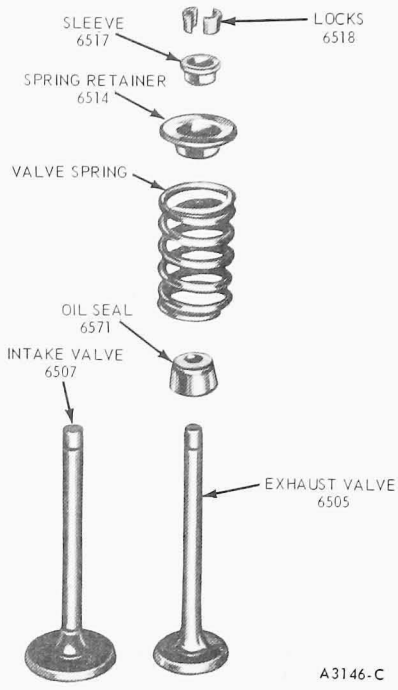

FIG. 47 Valve Assemblies — LD Engines

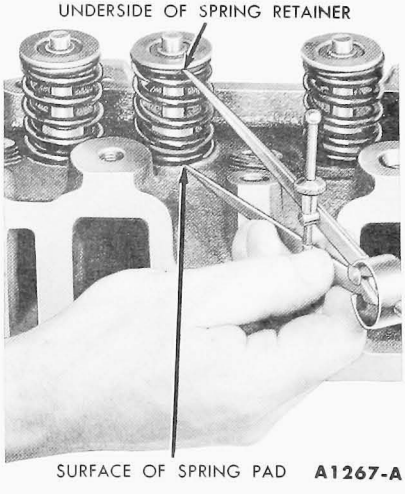

FIG. 48 Checking Valve Spring Assembled Height

VALVE LIFTER

A typical hydraulic valve lifter assembly is shown in Fig. 49.

Each valve lifter is a matched assembly. If the parts of one lifter are intermixed with those of another improper valve operation may result. Disassemble and assemble each lifter separately. Keep the lifter assemblies in proper sequence so that they can be installed in their original bores.

Disassembly

1. Grasp the lock ring with needle nose pliers to release it from the groove. It may be necessary to depress the plunger to fully release the lock ring.
2. Remove the push rod cup, plunger (Fig. 50), and spring.
3. Invert the plunger assembly and remove the disc valve retainer by carefully prying up on it with a screwdriver. Remove the disc valve and spring.

Refer to Part 21-01 for the cleaning, inspection and test procedures.

Assembly

1. Place the plunger upside down on a clean work bench.
2. Place the disc valve in position over the oil hole on the bottom of the plunger. Set the disc valve spring on top of the disc.
3. Position the disc valve retainer over the disc and spring, and push the retainer down into place on the plunger.
4. Place the plunger spring, and then the plunger (open end up) into the lifter body.
5. Place the push rod seat in the plunger.
6. Push the plunger and push rod cup into the body and install the lock ring (Fig. 51). Release the plunger, then depress it again to fully seat the lock ring.

OIL PUMP

A typical oil pump assembly is shown in Fig. 52.

Disassembly

1. Remove the oil inlet tube from the oil pump and remove the gasket.
2. Remove the cover attaching bolts then remove the cover. Remove the inner rotor and shaft assembly and the outer race.
3. Drill a small hole in the relief valve plug, then insert a self-threading sheet metal screw of the proper

diameter into the oil pressure relief valve chamber plug and pull the plug out of the chamber. Remove the spring and plunger.

Refer to Part 21-01 for the cleaning and inspection procedures.

Assembly

1. Oil all parts thoroughly.
2. Install the oil pressure relief valve plunger, spring and a new plug.
3. Install the outer race, and the inner rotor and shaft assembly. **Be sure the dimple (identification mark) on the outer race is facing outward and on the same side as identification mark on the rotor. The inner rotor and shaft and the outer race are serviced as an assembly. One part should not be replaced without replacing the other.** Install the cover. Torque the cover attaching bolts to specifications.
4. Position a new gasket and the oil inlet tube on the oil pump and install the attaching bolts.

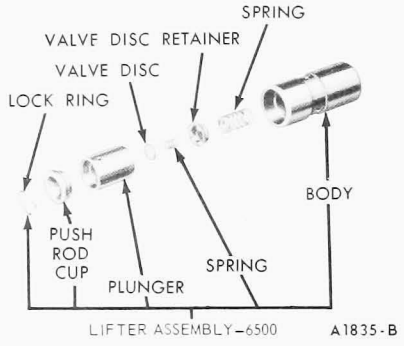

FIG. 49 Typical Hydraulic Valve Lifter Assembly

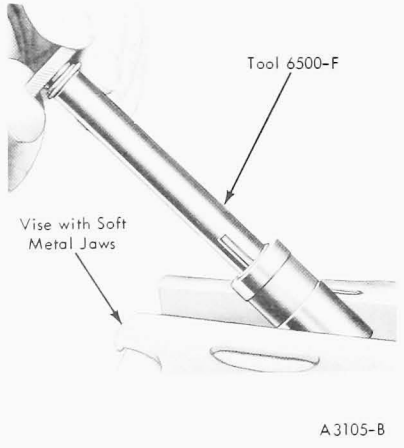

FIG. 50 Removing Lifter Plunger

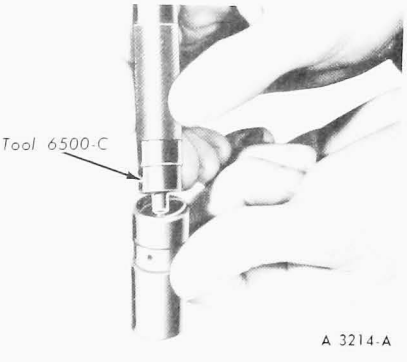

FIG. 51 Installing Valve Lifter Lock Ring

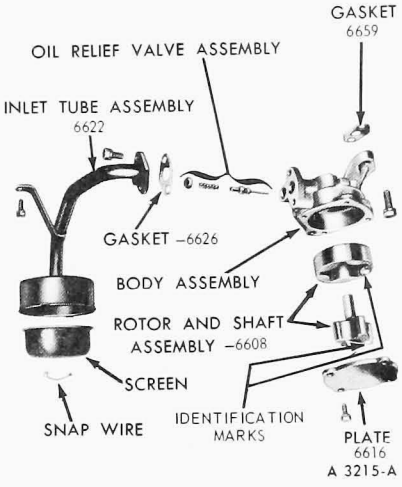

FIG. 52 Oil Pump Assembly — Typical

PISTON AND CONNECTING ROD ASSEMBLY

The piston, connecting rod and related parts are shown in Fig. 53.

Disassembly

1. Mark the pistons and pins to assure assembly with the same rod and installation in the same cylinder from which they were removed.
2. Remove the piston rings. Remove the piston pin retainers. Drive the pin out of the piston and connecting rod (Fig. 54). Discard the retainers.

Refer to Part 21-01 for the cleaning, inspection and repair procedures.

Assembly

1. Lubricate all parts with light engine oil. Position the connecting rod in the piston and push the pin into place. Assemble the piston and connecting rod as shown in Fig. 55.
2. Insert new piston pin retainers into the piston. Follow the instructions contained on the piston ring package and install the piston rings. Be sure the piston ring gaps are properly spaced (Figs. 34 or 35).
3. Check the ring side clearance of the compression rings with a feeler gauge (refer to Part 21-01).
4. Be sure the bearing inserts and the bearing bore in the connecting rod and cap are clean. Foreign material

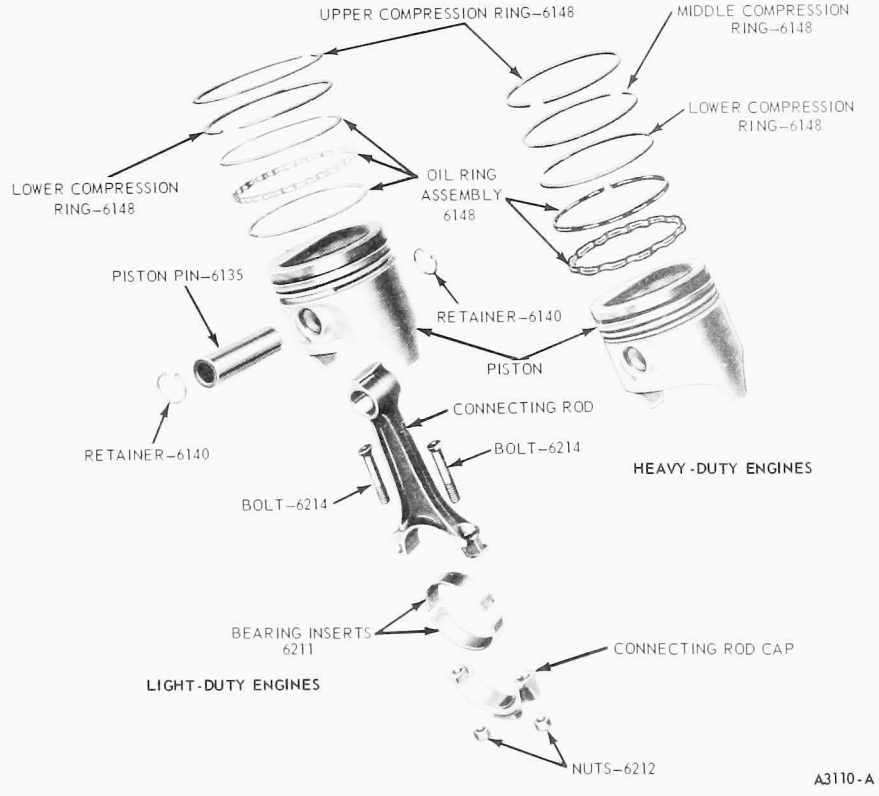

FIG. 53 Piston, Connecting Rod and Related Parts

under the inserts will distort the bearing and cause a failure. Install the bearing inserts in the connecting rod and cap with the tangs fitting in the slots provided.

CYLINDER ASSEMBLY

Disassembly

Follow steps 1 thru 11, 13 thru 20, and 24 thru 26 under Engine Disassembly. Remove the cylinder head dowels from the cylinder block. Remove the cylinder block drain plugs and remove the cylinder assembly from the workstand.

Clean the gasket and seal surfaces of all parts and assemblies (refer to Part 21-01).

Assembly

Install the replacement cylinder block assembly on a workstand. Install the cylinder block drain plugs and cylinder head dowels. Transfer all parts removed from the old cylinder assembly to the new cylinder assembly and check all assembly clearances and correct as required, following the procedures in steps 22 thru 39 and 41 thru 63 under Engine Assembly.

CYLINDER BLOCK

Before replacing a cylinder block, determine if it is repairable, and make the necessary repairs by following the procedures in Part 21-01.

Disassembly

Follow steps 1 thru 34 under Engine Disassembly. Remove the cylinder head dowels and cylinder block drain plugs. Remove the intake and exhaust manifolds and cylinder head as an assembly. Remove the cylinder block from the workstand.

Clean the gasket and seal surfaces of all parts and assemblies (Part 21-01).

Assembly

Install the replacement cylinder block on a workstand. Install the cylinder block drain plugs and cylinder head dowels. Transfer all parts removed from the old cylinder block to the new cylinder block and check all assembly clearances and correct as required, following steps 7 thru 62 under Engine Assembly. Install the manifolds and cylinder head as an assembly.

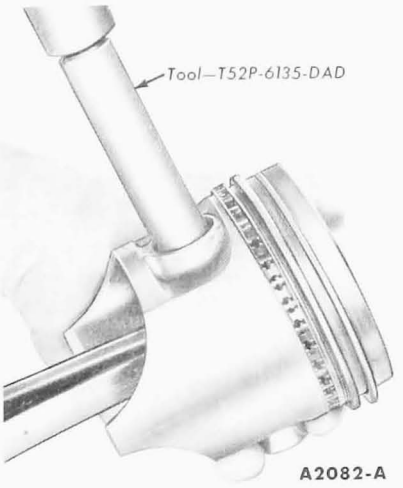

FIG. 54 Removing Piston Pin

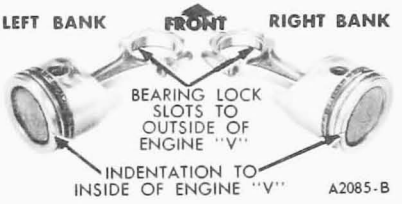

FIG. 55 Connecting Rod and Piston

SPECIFICATIONS

GENERAL SPECIFICATIONS

Engine	Compression Ratio	Bore And Stroke	Compression Pressure	Oil Pressure 2000 rpm	Firing Order	Engine Governed Speed (RPM)			
						Manual Trans.		Automatic Trans.	
						Full Load	No Load	Full Load	No Load
330 MD V-8 (2V)	①	3.87 x 3.50	When checking compression, take the highest compression reading and compare it to the lowest reading. The lowest reading must be within 75% of the highest.	35-60	1-5-4-2-6-3-7-8	3600	3900	3600	3900
330 HD V-8 (2V)				35-75		3600	3800	3600	3800
360 V-8 (2V)	①	4.05 x 3.50		35-60		–	–	–	–
361 V-8 (2V)	①			35-75		3600	3800	3600	3800
390 V-8 (2V)	①	4.05 x 3.78		35-60		–	–	–	–
391 V-8 (4V)	①	4.05 x 3.79		35-75		3600	3800	3600	3800

① Not available

CYLINDER HEAD

Engine	Combustion Chamber Volume–CC	Valve Guide Bore Dia.–Standard Int. and Exh.	Valve Seat Width	Valve Seat Angle	Valve Seat Runout (Maximum)	Valve Arrangement Front to Rear	Valve Seat Insert Bore Diameter–Standard ②	Gasket Surface Flatness ③
360,390 V-8	68.1-71.1	0.3728-0.3738	Int. 0.060-0.080 Exh. 0.070-0.090	Int. and Exh. 45°	0.002	E-I-E-I-I-E-I-E	Exh. 1.626-1.627 ④ Int. 1.812-1.813 ⑤	0.003 Inch in any 6 Inches or an overall of 0.006
330 MD V-8	78.5-81.5		Int. 0.070-0.090 Exh. 0.090-0.110					
330 HD, 361,391		①	Int. 0.070-0.090 Exh. 0.095-0.110					

① Intake 0.3728–0.3738, Exhaust 0.4368–0.4378.
② Valve seat insert to bore interference fit-standard (intake and exhaust 0.003–0.004). The valve seat insert diameter–standard minimum and standard maximum is 0.003 larger than the insert bore diameter.
③ Head gasket surface finish RMS 60-150.
④ 361 and 391 V-8, 330 HD
⑤ 361–391

VALVE ROCKER ARMS, ROCKER ARM SHAFT, PUSHRODS AND TAPPETS

Engine	Rocker Arm Shaft O.D.	Rocker Arm To Rocker Shaft Clearance	Rocker Arm Bore Diameter	Rocker Arm Lift Ratio	Valve Push Rod (Maximum Runout)	Valve Tappet or Lifter			Collapsed Tappet Gap	
						Standard Diameter	Clearance To Bore ②	Hydraulic Lifter Leakdown Rate	Allowable	Desired
360,390	0.839-0.840	0.0020-0.0050 ①	0.8425-0.8440	1.73:1	0.015	0.8740-0.8745	0.0005-0.0020	10-50 Seconds Maximum-Measured at 1/16 inch plunger travel	0.119-0.219	0.119-0.169
330,361,391		0.0020-0.0050 ①	0.8425-0.8440						0.080-0.180	0.100-0.150

① Wear limit – 0.0065 ② Wear limit – 0.005

VALVE SPRINGS

Engine	Valve Spring Pressure Lbs @ Specified Length		Valve Spring Free Length (Approx)	Valve Spring Assembled Height (Pad to Retainer)	Valve Spring Out of Square (Max)
	Pressure	Wear Limit			
330 MD	94-104 @ 1.820 180-198 @ 1.420	85 @ 1.820 162 @ 1.420	2.20	1-13/16–1-27/32	5/64 (.078)
330 HD, 361,391 360-390 F-100 Exh. Only	76-84 – 1.670 175-194 @ 1.240	69 @ 1.670 163 @ 1.240	2.00	1-21/32–1-11/16	
360, 390 F-100 Int. Only F-250-350 Int. and Exh.	85-95 @ 1.820 209-231 @ 1.38	77 @ 1.820 186 @ 1.38	2.12	1-13/16–1-27/32	

VALVES

Engine	Valve Stem to Valve Guide Clearance		Valve Head Diameter		Valve Face Angle	Valve Face Runout (Maximum)
	Intake ①	Exhaust ①	Intake	Exhaust		
330 MD	0.0010-0.0027	0.0020-0.0037	1.745-1.760	1.500-1.515	44°	0.002
330 HD		0.0020-0.004				
360,390		0.0015-0.0032	2.022-2.040	1.551-1.566		
361,391		0.0020-0.004	1.745-1.760	1.500-1.510		

① Wear limit 0.0055

VALVES (Continued)

ENGINE	VALVE STEM DIAMETER							
	Standard		0.003 Oversize		0.015 Oversize		0.030 Oversize	
	Intake	Exhaust	Intake	Exhaust	Intake	Exhaust	Intake	Exhaust
330 MD	0.3711-0.3718	0.3701-0.3708	0.3741-0.3748	0.3731-0.3738	0.3861-0.3868	0.3851-0.3858	0.4011-0.4018	0.4001-0.4008
330 HD 361,391		0.4338-0.4348		0.4368-0.4378		0.4488-0.4498		0.4638-0.4648
360,390		0.3706-0.3713		0.3736-0.3743		0.3856-0.3863		0.4006-0.4013

CAMSHAFT

ENGINE	Lobe Lift ①		Theoretical Valve Lift		Camshaft		Camshaft Journal to Bearing Clearance ②
	Intake	Exhaust	Intake	Exhaust	End Play	Wear Limit	
330	0.2446	0.233	0.423	0.403	0.001–0.007	0.009	0.001–0.003
360, 390	0.2470	0.2490	0.427	0.430			
361,391	0.2446	0.233	0.423	0.403			

① Maximum allowable lobe lift loss (All Engines) 0.005 ② Wear Limit – 0.006

CAMSHAFT (Continued)

Item	Bearing	Engine		Item	Bearing	Engine	
		360,390	330,361,391			360,390	330,361,391
Camshaft Journal Diameter Standard ①	(No. 1)	2.1238-2.1248	2.1238-2.1248	Camshaft Bearings Inside Diameter	(No. 1)	2.1258-2.1268	2.1258-2.1268
	(No. 2)				(No. 2)		
	(No. 3)				(No. 3)		
	(No. 4)				(No. 4)		
	(No. 5)				(No. 5)		
Camshaft Bearings Location ②	(No. 1)	0.005-0.020	0.005-0.020				

① Camshaft Journal maximum runout All engines – 0.005
Camshaft journal maximum out-of-round – 0.0005

② Distance in inches that the front edge of the bearing is installed towards the rear from the front face of the cylinder block.

CAMSHAFT DRIVE MECHANISM

Engine	Timing Chain Deflection (Maximum)
330	0.680
360,390	0.500
361,391	0.680

APPROXIMATE OIL PAN CAPACITIES ①

	ENGINE	
	330,361 and 391 V-8	360,390 V-8
U. S. Measure	8.00	5.00
Imperial Measure	6.75	4.25

① Add one quart extra when changing oil filter

CYLINDER BLOCK

Engine	Cylinder Bore Diameter ①	Tappet Bore Diameter	Main Bearing Bore Diameter	Distributor Shaft Bearing Bore Diameter	Head Gasket Surface Flatness ②	Crankshaft to Rear Face of Block Runout TIR Max
330 MD	3.8750-3.8786	0.8752-0.8767	2.9417-2.9425	0.5155-0.5165	0.003 inch in any 6 inches or 0.006 inch overall	0.005
330 HD				0.4525-0.4535		
360, 390	4.0500-4.0536			0.5155-0.5165		
361, 391						

① Maximum out-of-round 0.001
Wear Limit 0.005
Maximum taper 0.001
Wear Limit 0.010
Cylinder bore surface finish RMS 15-35

② Head gasket surface finish RMS 60-150

CRANKSHAFT AND FLYWHEEL

Engine	Main Bearing Journal Diameter ①	Main Bearing Journal Runout-Maximum ②	Main Bearing Journal Thrust Face Runout	Main Bearing Journal Max. Taper	Thrust Bearing Journal Length	Main and Rod Bearing Journal Finish R M S Max	Main Bearing Journal Thrust Face Finish R M S
330 MD	2.7484-2.7492	0.002	0.001	0.0003 Per Inch	1.124-1.126	12	20 Front – 10 Rear
360,390							35 Front – 25 Rear
330 HD,361	2.7479-2.7487						20 Front – 10 Rear
391							

① Maximum Out-of-round 0.0004 ② Wear limit 0.005

CRANKSHAFT AND FLYWHEEL (Continued)

Engine	Connecting Rod Journal Diameter ①	Connecting Rod Bearing Journal Max. Taper	Crankshaft Free End Play	Flywheel Clutch Face Runout	FLYWHEEL O.D. RUNOUT	
					Standard Trans.	Automatic Trans.
330 MD	2.4380-2.4388	0.0004 Per Inch	0.004-0.010 ②	0.010	0.030	0.075
360,390		0.0003 Per Inch			0.030	0.075
330 HD,361 391	2.4377-2.4385	0.0004 Per Inch			0.030	0.075

① Maximum Out-of-round 330 HD, 361 and 391 0.0005 ② Wear limit 0.014

CRANKSHAFT BEARINGS

Engine	CONNECTING ROD BEARINGS			MAIN BEARINGS		
	To Crankshaft Clearance		Wall Thickness -Standard ①	To Crankshaft Clearance		Wall Thickness -Standard ①
	Desired	Allowable		Desired	Allowable	
330	0.0008-0.0015	0.0008-0.0025	0.0755-0.0760	0.001-0.0015	0.001-0.0029	0.0954-0.0957
360,390	0.0008-0.0015	0.0008-0.0025		0.0005-0.0015	0.0005-0.0025	
361 391	0.001-0.0015	0.001-0.0029		0.001-0.0015	0.001-0.0029	0.0955-0.0960

① 0.002 U.S. thickness. Add 0.0010 to standard thickness

CONNECTING ROD

Engine	Piston Pin Bore or Bushing I.D. ①	Connecting Rod Bearing Bore Diameter ②	Connecting Rod Length Center to Center	CONNECTING ROD ALIGNMENT MAX. TOT. DIFFERENCE ③		CONNECTING ROD ASSEMBLY (ASSEMBLED TO CRANKSHAFT)	
				Twist	Bend	Side Clearance	Wear Limit
330, 360	0.9752-0.9755	2.5907-2.5915	6.5380-6.5420	0.012	0.004	0.010-0.020	0.030
361, 390, 391			6.4860-6.4900			0.008-0.025 (360 & 390)	

① Piston pin bushing or bore
Maximum out-of-round
360,390 ..... 0.0003
330,361,391 ..... 0.0003
Maximum taper
330 MD 0.0004
330 HD, 360, 361, 390, 391 ..... 0.0003

② Connecting rod bearing bore maximum out-of-round and taper (All Engines) 0.0004

③ Pin bushing and crankshaft bearing bore must be parallel and in the same vertical plane within the specified total difference at ends of 8-inch long bar measured 4 inches on each side of rod.

PISTON

Engine	Diameter ①			Piston To Cylinder Bore Clearance ②	Piston Pin Bore Diameter	Ring Groove Width			Oil
	Coded Red	Coded Blue	0.003 Oversize			Top	Compression Inter med.	Bottom	
330 MD	3.8724-3.8730	3.8736-3.8742	3.8748-3.8754	0.0025-0.0033	0.9754-0.9757	0.0805-0.0815	–	0.097-0.098	0.188-0.189
330 HD	3.8724-3.8730	3.8736-3.8742	3.8738-3.8754	0.0025-0.0033	0.9754-0.9757				
360-390	4.0484-4.0490	4.0496-4.0502	4.0508-4.0514	0.0015-0.0023	0.9752-0.9755	0.0801-0.0811	–	0.0960-0.0970	0.188-0.190
361 HD	4.0474-4.0480	4.0486-4.0492	4.0498-4.0504	0.0025-0.0033	0.9754-0.9757	0.097-0.098	0.081-0.082	0.081-0.082	0.189-0.190
391 HD									

① Measured 90° to pin centerline and at pin centerline height.
② Refer to Part 21-01 for the proper procedures for measuring piston to bore clearance.

PISTON RINGS

Engine	RING WIDTH			SIDE CLEARANCE			RING GAP		
	Compression Ring		Oil Ring	Compression Ring		Oil Ring	Compression Ring		Oil Ring
	Top	Bottom		Top	Bottom		Top	Bottom	
330 MD 330 HD	0.078-0.077	0.0930-0.0940	–	0.0024-0.0040 ①	0.003-0.005 ②	Snug	0.010-0.015	0.010-0.015	0.015-0.055
360,390	0.0774-0.0781	0.0770-0.0780	–	0.002-0.004 ①	0.0020-0.0040 ①	Snug	0.015-0.023	0.010-0.020	0.015-0.055
361, 391 ③ ④ ⑤	0.0930-0.0935	0.077-0.078	0.1859-0.1866	0.0035-0.0050	0.0035-0.0050	0.0036-0.0046	0.015-0.023	0.010-0.020	0.015-0.025

① Wear Limit 0.002 Max. Increase in Total Clearance
② Wear Limit 0.007
③ Intermediate ring width 361-391 ..... 0.077-0.078
④ Intermediate ring gap 361, 391 ..... 0.010-0.020
⑤ Intermediate ring side clearance 361, 391 ..... 0.0035-0.0050

PISTON PIN

Engine	Length	DIAMETER			To Piston Clearance	To Connecting Rod Bushing Clearance
		Standard	0.001 Oversize	0.002 Oversize		
330, 361, 391	3.150-3.170	0.9750–0.9753	0.9760–0.9763	0.9770–0.9773	0.0003–0.0005	0.0001-0.0003
360, 390					0.0001–0.0003	

OIL PUMP

Engine	Relief Valve Spring Tension–lbs Specified Length	Drive Shaft To Housing Bearing Clearance	Relief Valve Clearance	Rotor Assembly End Clearance– (Pump Assembled)	Outer Race To Housing (Radial Clearance)
330 MD	11.1-11.8 @ 1.560	0.0015–0.0029	0.0015–0.0029	0.001-0.004	0.001-0.013
330 HD	11.1–11.8 @ 1.560				
360, 390	8.7-9.5 @ 1.560				
361, 391	11.1–11.8 @ 1.560				

TORQUE LIMITS

NOTE: All values given are in Ft-Lbs unless otherwise stated. Oil threads with lightweight engine oil unless the threads require oil resistant or water-resistant sealer.

Item	Engines Applicable	Torque
Cylinder Head Bolts Step 1	330,360,361,390,391	70
Cylinder Head Bolts Step 2	330,360,361,390,391	80
Cylinder Head Bolts Step 3	330,360,361,390,391	80-90
Main Bearing Cap Bolts	330,360,361,390,391	95-105
Exhaust Manifold to Cylinder Head	330,361,391	18-24
	360,390	12-18
Oil Pump to Cylinder Block	330,360,361,390,391	17-27
Oil Pump Cover Plate	330,361,391	9-14
Oil Filter Center Bolt	330HD, 361,391	20-25
Damper or Pulley to Crankshaft	330MD,360,390	70-90
	330HD,361,391	150-175
Valve Rocket Shaft Support to Cylinder Head	330,360,361,390,391	40-45
Water Pump to Cylinder Block or Front Cover	360,390	20-25
	330,361,391	17-27
Oil Pick-Up Tube To Oil Pump	330,361,391	10-15
Cylinder Front Cover	330,361,390-3/8-16	26-34
	360-390-5/16-18	13-21
Water Outlet Housing	360,390	12-15
	All Other Engines	10-15

Item	Engines Applicable	Torque
Oil Pan to Cylinder Block	360,390	8-10
	330,361,391	4-7
Oil Pan Drain Plug	All Engines	15-25
Intake Manifold to Cylinder Head	330,360,361,390,391	40-45
Flywheel to Crankshaft	All Engines	75-85
Exhaust Manifold to Muffler Inlet Pipe	Light Trucks	25-35
	Medium and Heavy Duty Trucks	25-30
Oil Filter Adapter to Cylinder Block	330,360,361,390,391	14-19
Valve Rocker Arm Cover	330,360,361,390,391	4-7
Fuel Pump to Cylinder Block or Cylinder Front Cover	All Engines	22-25
Connecting Rod Nuts	330,360,361,390,391	30-45
Camshaft Sprocket or Gear to Camshaft	330,360,361,390,391	34-45
Oil Filter Insert to Adapter	330HD, 361, 391	50-60
Camshaft Thrust Plate to Block	All Engines	12-15
Alternator Pivot Bolt	330 MD, 360-390	45-57
	330 HD, 361-391	65-75

LIGHT TRUCK ENGINE SUPPORT TORQUE LIMITS

TRUCK	FRONT SUPPORTS		
	Application	Engine	Thread Size and Torque (Ft-Lbs)
F-100,250, 350	Engine Front Bracket to Frame Assembly	360,390 V-8	3/8-16 30-35
	Front Insulator Stud to Frame Bracket		7/16-14 40-60
	Engine Front Insulator to Cylinder Block	360,390 V-8	7/16-14 45-55
F-100-250	No. 2 Crossmember to Frame		7/16-14 35-45

TRUCK	FRONT SUPPORTS		
	Application	Engine	Thread Size and Torque (Ft-Lbs)
F-100,250, 350	Engine Rear Support to Frame Assembly or Bracket	360,390 V-8	1/2-13 40-60
F-250 4x4 F-350	Engine Rear Support Bracket to Frame	360,390 V-8	7/16-14 30-40
F-100,250, 350	Rear Engine Insulator to Transmission Extension		1/2-13 55-65

MEDIUM AND HEAVY TRUCK ENGINE SUPPORT TORQUE LIMITS

Supports	Engine	Application	Thread Size	Torque Ft-Lbs
Front	330, 361 and 391 V-8	Insulator to Engine Front Mount or Support	9/16–18	50–70
		Insulator Assembly to Engine Front Mounting Bracket	7/16–14	50–70
		Engine Front Mounting Bracket to Engine Cover	3/8–16	31–42
		Insulator to Spacer	7/16–14	31–42
		Insulator to Spacer	1/2–13	75–105
Rear	330, 361 and 391 V-8	Crossmember to Clutch Housing	9/16–18	75–105

PART 21—26 401,477 and 534 CID Super Duty V-8 Engines

COMPONENT INDEX	Page
CAMSHAFT	
Removal and Installation	26-14
CAMSHAFT BEARING BORE PLUG	
Removal and Installation	26-15
CAMSHAFT BEARINGS	
Removal and Installation	26-19
CLUTCH PILOT BUSHING	
Removal and Installation	26-15
CONNECTING ROD BEARING	
Removal and Installation	26-17
CRANKCASE VENTILATION REGULATOR VALVE	
Removal and Installation	26-09
CRANKSHAFT	
Removal and Installation	26-17
CRANKSHAFT REAR OIL SEAL	
Removal and Installation	26-15
CYLINDER FRONT COVER AND TIMING GEARS	
Removal and Installation	26-13
CYLINDER HEAD	
Disassembly and Assembly	26-22
Removal and Installation	26-11
ENGINE	
Description	26-02
Disassembly and Assembly	26-20
Removal and Installation	26-04
ENGINE FRONT SUPPORTS	
Removal and Installation	26-09
ENGINE REAR SUPPORTS	
Removal and Installation	26-09
EXHAUST MANIFOLD	
Removal and Installation	26-11

COMPONENT INDEX	Page
FLYWHEEL	
Removal and Installation	26-15
FRONT OIL SEAL	
Removal and Installation	26-14
INTAKE MANIFOLD	
Removal and Installation	26-10
MAIN BEARING	
Removal and Installation	26-15
OIL COOLER	
Removal and Installation	26-09
OIL FILTER	
Removal and Installation	26-20
OIL PAN	
Removal and Installation	26-15
OIL PUMP	
Disassembly and Assembly	26-23
Removal and Installation	26-15
PISTON AND CONNECTING ROD	
Disassembly and Assembly	26-23
Removal and Installation	26-17
SPECIFICATIONS	26-26
VALVE CLEARANCE ADJUSTMENT	26-04
VALVE LIFTERS	
Removal and Installation	26-12
VALVE ROCKER ARM COVER AND ROCKER ARM	
Disassembly and Assembly	26-22
Removal and Installation	26-10
VALVE SPRING, RETAINER AND STEM SEAL	
Removal and Installation	26-12
WATER PUMP	
Removal and Installation	26-12

DESCRIPTION

ENGINE

The differences between the engine models and the vehicle model applications are listed in Fig. 1. The 401, 477 and 534 SD (Super Duty) V-8 engines (Figs. 2 and 3) have the same basic design.

The engines are equipped with a positive crankcase ventilation system.

On a closed-type crankcase ventilation system, the oil filler caps are sealed and connected to the air cleaner (L-LT-C-and CT-Series) (Fig. 4). Thus, the crankcase receives air from the air cleaner. If the system becomes restricted, a backflow condition will occur, thereby venting the crankcase gases into the air cleaner.

Rating Plate Identification	Engines	Piston Displacement (Cu. In.)	Bore (Inches)	Stroke (Inches)	Compression Ratio	Carburetor	Governor	Distributor	Vehicle Model Application
H	401 SD V-8	401	4.125	3.75	7.5:1	4-V	Mechanical-Centrifugal	'Centrifugal and Vacuum	L-900,LN-900,C-900 LT-900,LNT-900,CT-900, LTS-900
K	477 SD V-8	477	4.500	3.75	7.5:1	4-V	Mechanical-Centrifugal	Centrifugal and Vacuum	L-900,LN-900,C-900 LT-900,LNT-900,CT-900, LTS-900
L	534 SD V-8	534	4.500	4.20	7.5:1	4-V	Mechanical-Centrifugal	Centrifugal and Vacuum	L-900,LN-900,C-900 LT-900,LNT-900,CT-900, LTS-900

CA 1086-B

FIG. 1 Engine Applications

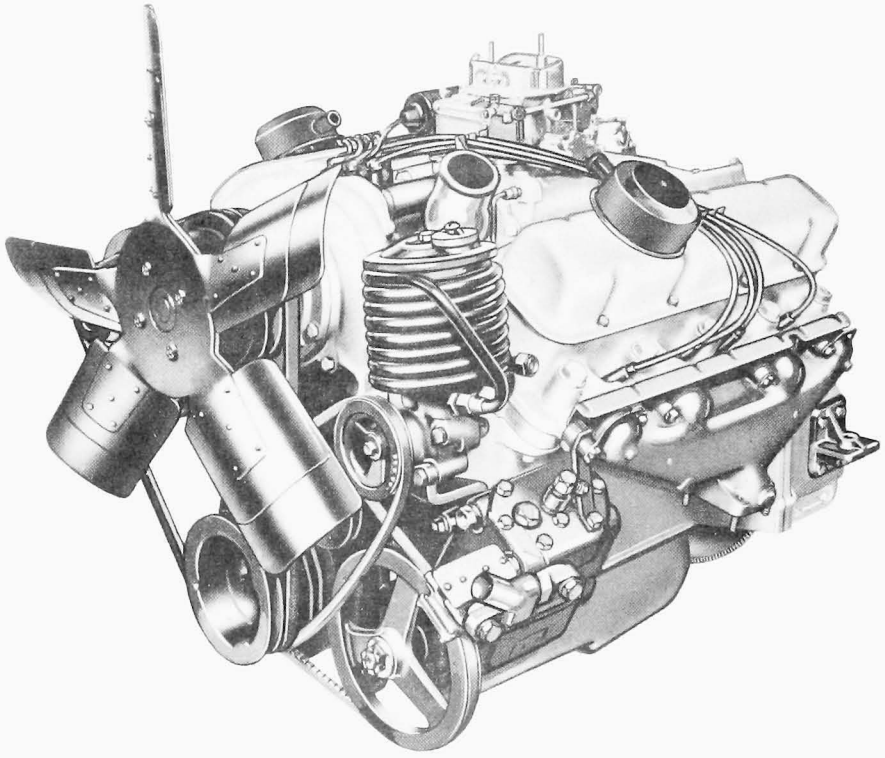

A3023 - B

FIG. 2 SD V-8 Engine—Typical

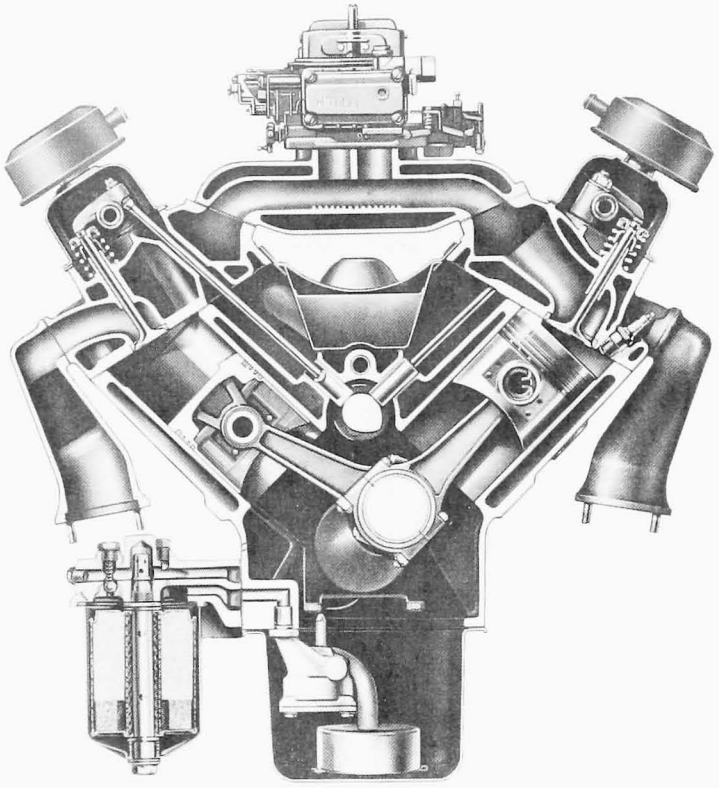

FIG. 3 SD V-8 Engine Sectional View—Typical

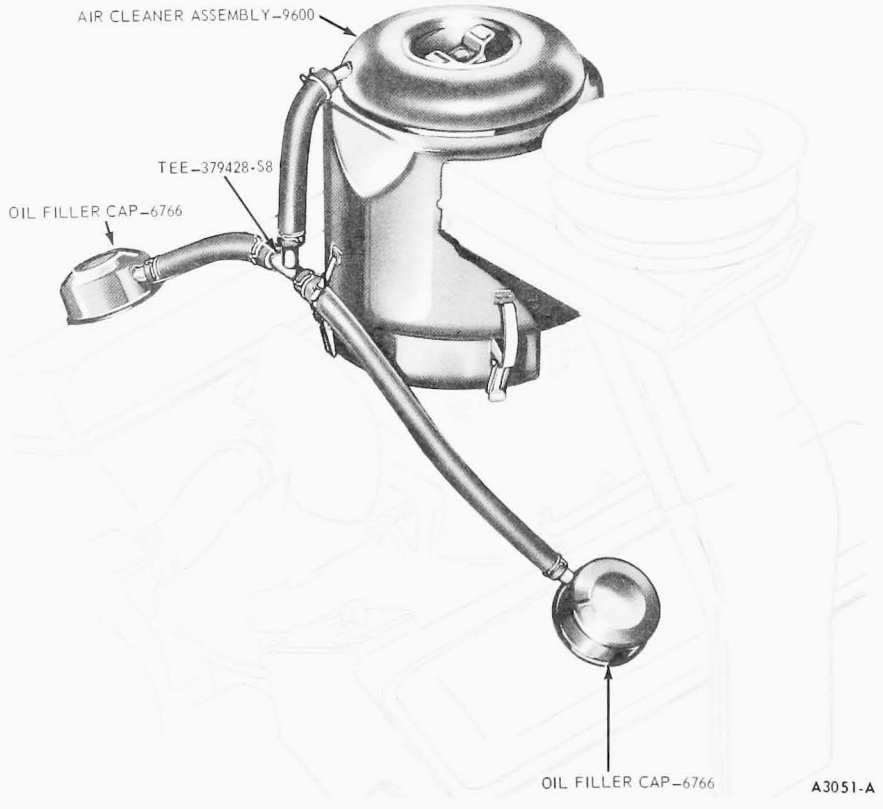

FIG. 4 Crankcase Ventilation System—L-, LT-, C-and CT-Series—Typical

ADJUSTMENTS

VALVE CLEARANCE

It is important that the valve lash be held to the correct specifications. If the lash is set too close, the valve will open too early and close too late, resulting in rough engine idle. Burning and warping of the valves will occur also because the valves cannot make firm contact with the seats long enough to cool properly. If the lash is excessive, it will cause the valve to open too late and close too early, causing valve bounce. In addition, damage to the camshaft lobe is likely because the tappet foot will not follow the pattern of the camshaft lobe, causing a shock contact between these two parts.

PRELIMINARY (COLD) ADJUSTMENT

If some component of the valve train has been replaced; i.e., rocker arm, push rod, camshaft, etc., it will be necessary to make a preliminary (cold) valve lash adjustment before starting the engine. If the valve lash adjustment is made for an engine tune-up, follow the final (hot) adjustment procedure.

On V-8 engines, the cylinders are numbered from front to rear: right bank, 1-2-3-4-; left bank, 5-6-7-8. On the 401, 477 and 534 V-8 engines, the valves are arranged from front to rear on both banks, E-I-E-I-I-E-I-E.

1. Install an auxiliary starter switch. **Crank the engine with the ignition switch OFF.**
2. On the 401-477 and 534 V-8 engines, make three chalk marks on the crankshaft damper (Fig. 5). Space the marks approximately 90 degrees apart so that with the timing marks the damper is divided into four equal parts (90 degrees represents 1/4 of the distance around the damper circumference). Set the intake and exhaust valve lash (Fig. 6) to specifications with a step-type feeler gauge (go and no go).

Rotate the crankshaft until No. 1 piston is near TDC at the end of the compression stroke. Loosen the lock nut and turn the adjusting screw to adjust the following valves, and tighten the lock nut to specifications:

No. 1 Exhaust No. 1 Intake
No. 4 Exhaust No. 2 Intake
No. 5 Exhaust No. 7 Intake

Rotate the crankshaft 180 degrees or 1/2 turn in the direction shown in Fig. 5 (this puts No. 4 piston on TDC). Adjust the following valves:

No. 6 Exhaust No. 4 Intake
No. 8 Exhaust No. 5 Intake

Rotate the crankshaft another 3/4 turn in the same direction (this puts No. 3 piston on TDC). Adjust the following valves:

No. 2 Exhaust No. 3 Intake
No. 3 Exhaust No. 6 Intake
No. 7 Exhaust No. 8 Intake

FINAL (HOT) ADJUSTMENT

1. Be sure the engine is at normal operating temperature before attempting to set the valve lash.
2. With the engine idling, set the valve lash (Fig. 6) using a step-type feeler gauge only (go and no go). The final (hot) intake and exhaust valve lash settings are listed in the specifications.

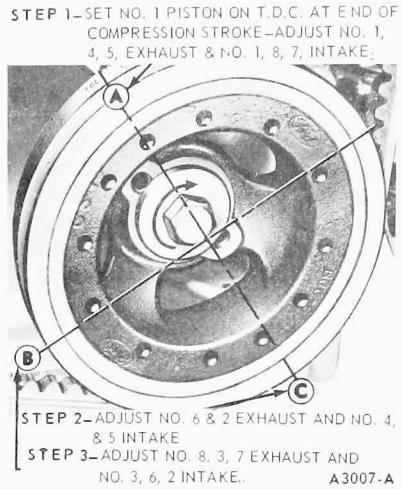

FIG. 5 Preliminary (Cold) Valve Clearance Adjustment

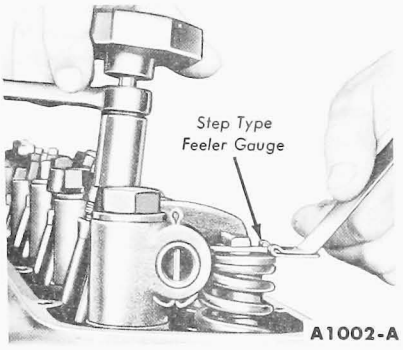

FIG. 6 Final (Hot) Valve Clearance Adjustment

REMOVAL AND INSTALLATION

When installing nuts or bolts that must be torqued (refer to the end of this Part for torque specifications), oil the threads with light weight engine oil. **Do not oil threads that require oil-resistant or water-resistant sealer.** Lubricate all bearing and/or mating surfaces with engine oil.

ENGINE

The engine removal and installation procedures are for the engine only without the transmission attached.

L, LT AND LTS-SERIES

Removal

1. Support the hood and fenders in a vertical position.
2. Drain the cooling system and the crankcase.
3. Disconnect the battery ground strap. Disconnect the crankcase ventilation system hose. Remove the carburetor air cleaner.
4. Remove the fan, radiator shutter, and the fan shroud.

Disconnect the vacuum assist brake line at the intake manifold.

On a vehicle with power steering, disconnect the power steering return line and the pump pressure line at the bracket on the frame left side member. Drain the oil into a suitable container. Disconnect the power steering return line at the pump steering return line at the pump reservoir and the pressure line at the pump housing.

On a vehicle with an air compressor, loosen the outlet line at the air compressor and allow the air to escape,

then disconnect the line. Disconnect the air compressor governor line at the air compressor.

5. Disconnect the heater hose at the water pump and at the intake manifold.
6. Disconnect the wires at the coil, and the oil pressure and temperature sending unit wires at the sending units. Remove the wiring harness from the clip at the coil and on the intake manifold, then position the wiring harness on the dash panel.
7. Disconnect the choke cable at the carburetor and position it on the dash panel.
8. Disconnect the oil pressure safety switch wires at the switch.
9. Disconnect the fuel filter inlet line at the flexible hose and remove the retaining clamp at the intake manifold.
10. Disconnect the tachometer drive cable at the governor.
11. Remove the accelerator retracting spring, and remove the accelerator linkage retaining clip at the carburetor.
12. Remove the hand throttle cable from the carburetor and position it on the dash panel. Disconnect the engine ground strap at the dash panel.
13. Disconnect the wiring harness at the alternator.
14. Remove the oil filter.
15. Disconnect the right and left muffler inlet pipes at the exhaust manifolds.
16. Place a jack under the front bumper at the right side and raise the right front of the vehicle. Remove the starter shield and starter, then lower the vehicle and remove the jack.
17. Install the engine lifting eye bolts and sling (Fig. 7).
18. Remove the engine front support to frame attaching bolts, nuts, and washers. Remove the flywheel housing dust cover.
19. Position a jack under the transmission and remove the flywheel housing to engine attaching bolts.
20. Remove the engine from the chassis and install it on a work stand (Fig. 8).

Installation

1. Install guide pins in the two flywheel housing lower bolt holes in the engine.
2. Place new muffler inlet pipe gaskets over the exhaust manifold studs.
3. Attach the engine lifting eye bolts and sling (Fig. 7) and remove the engine from the work stand.
4. Carefully lower the engine into the chassis. Make sure the exhaust manifolds are properly aligned with the muffler inlet pipes and that the guide pins in the cylinder block engage the holes in the flywheel housing.
5. Install two flywheel housing bolts and remove the guide pins. Install the remaining bolts, then tighten all the bolts to speicifcations.
6. Remove the jack from transmission. Install the flywheel housing dust cover.
7. Install the engine front support bolts, washers, and nuts; then tighten them to specifications. Install the oil filter. Connect the muffler inlet pipes.
8. Place a jack under the front bumper at the right side and raise the right front of the vehicle. Install the starter and starter shield; then lower the vehicle and remove the jack.
9. Remove the engine lifting eyes and sling. Connect the ignition wires.

Connect the vacuum assist brake line at the intake manifold.

On a vehicle with an air compressor, connect the governor line and the outlet at the air compressor.

On a vehicle with power steering, connect the power steering return line to the pump reservoir and the pressure line at the pump housing. Connect the return line and pressure line to the bracket on the frame left side member.

10. Connect the hand throttle cable, accelerator linkage and retaining clip, and the accelerator return spring.
11. Connect the fuel inlet line and connect the retaining clamp to the intake manifold. Position the wiring harness in the retaining clip at the left rear corner of the intake manifold.
12. Connect the ignition coil wires, the alternator wires, the choke control cable, the tachometer drive cable, the oil pressure and engine temperature sending unit wires, and the oil pressure safety switch wires.
13. Connect the heater return hose to the water pump and the heater inlet hose at the engine.
14. Position the fan shroud in the engine compartment; then install the radiator and radiator shutter. Install the fan blade assembly, then install the fan shroud. Connect the radiator inlet and outlet hoses.
15. Connect the battery ground strap.
16. Fill and bleed the cooling system. Fill the crankcase with the proper grade and quantity of engine oil.

On a vehicle with power steering, fill the power steering pump following the recommended procedure.

17. Operate the engine at fast idle and check all gaskets and hose connections for leaks.
18. Install the air cleaner and connect the closed crankcase ventilation system hose. Secure the hood and fenders in the locked position.

C-AND CT-SERIES

Removal

1. Release the cab lock and tilt the cab forward.
2. Drain the cooling system and the crankcase.
3. Disconnect the battery ground cable at the battery. Disconnect the crankcase ventilation hose, and remove the carburetor air cleaner. Remove the oil level dipstick.
4. Disconnect the oil filler hose at the valve rocker arm cover. Disconnect the radiator supply tank tube at the front thermostat housing. Disconnect the cab latch anti-rattle springs, then remove the bracket and tank assembly.
5. Disconnect the resistor, tachometer and distributor wires from the coil. Disconnect the oil pressure and engine temperature wires at the

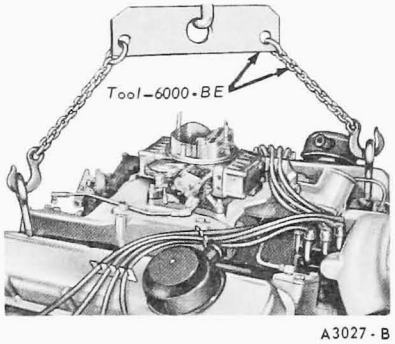

A3027-B

FIG. 7 Engine Lifting Sling—Typical

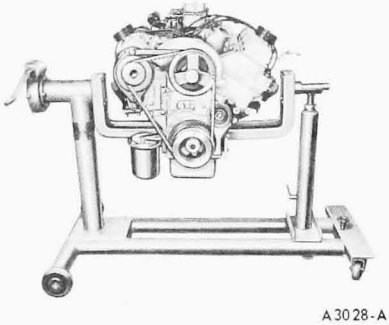

A3028-A

FIG. 8 Engine Mounted on Work Stand—Typical

sending units. Disconnect the choke control cable at the carburetor.
6. Disconnect the oil pressure safety switch wires at the switch. Disconnect the heater hoses at the engine and remove the hose retaining bracket from the intake manifold. Remove the heater return hose adapter from the water pump.
7. Disconnect the radiator outlet hose at the water pump and slide the hose downward.
8. Disconnect the wires at the alternator. Loosen the alternator mounting bolts and the adjusting arm bolts, then remove the two drive belts. Remove the oil filter.
9. Remove the starter shield and starter.
10. Disconnect the hand throttle control cable and the accelerator cable at the carburetor. Remove the accelerator cable bracket and the accelerator return spring.
11. Remove the bracket that secures the choke and throttle cables to the radiator bracket. Remove the accelerator cable retaining bracket from the radiator bracket and air deflector.
12. Disconnect the fuel line at the flex line, then remove the line. Disconnect the tachometer drive cable at the governor.
13. Remove the radiator inlet hose. Remove the fan assembly attaching bolts.
14. Remove the radiator shutter assembly, radiator, fan, and shroud.

On a vehicle with conventional brakes, disconnect the vacuum assist brake line at the intake manifold.

On a vehicle with power steering, disconnect the power steering return line at the pump reservoir and the pressure line at the pump housing. Drain the oil into a suitable container. Loosen the pump assembly and remove the drive belt.

On a vehicle with an air compressor, loosen the outlet line at the air compressor and allow the air to escape; then disconnect the line. Disconnect the air compressor governor line at the air compressor. Loosen the air compressor idler pulley and remove the drive belt. Remove the air compressor pulley.

15. Install the engine lifting eye bolts and sling (Fig. 7).
16. Disconnect the muffler inlet pipes at the exhaust manifold.
17. Remove the oil pan. Position a floor jack under the transmission with no pressure applied. Remove the flywheel housing dust cover and the flywheel housing-to-engine bolts.
18. Disconnect the parking brake clevis pin. Disconnect the engine front support at the frame crossmember.
19. Raise the engine approximately one inch and support the transmission with the jack.
20. Remove the engine from the chassis and install it on a work stand (Fig. 8).

Installation

1. Install guide pins in the two lower bolt holes in the cylinder block.
2. Place a new gasket over the exhaust manifold studs.
3. Attach the engine lifting eye bolts and sling (Fig. 7) and remove the engine from the work stand.
4. Carefully lower the engine into the chassis. Make sure the exhaust manifolds are properly aligned with the muffler inlet pipes and the guide pins in the cylinder block engage the holes in the flywheel housing.
5. Install two flywheel housing-to-engine bolts and remove the guide pins. Install the remaining bolts, then tighten all the bolts to specifications.
6. Install the engine front support bolts, washers, and nuts, then tighten them to specifications.
7. Remove the jack from the transmission. Install the flywheel housing dust cover and the parking brake clevis pin.
8. Install the starter. The engine ground strap is retained by the starter mounting at the starter shield bolt.
9. Connect the muffler inlet pipes to exhaust manifold. Install oil pan and the oil filter.
10. Remove the engine lifting eye bolts and sling.
11. Connect the fuel line to the flex line.

Connect the vacuum assist brake line at the intake manifold.

On a vehicle with an air compressor, install the air compressor pulley and the drive belt. Adjust the belt tension, then tighten the idler pulley. Connect the air compressor governor line and outlet at the air compressor.

On a vehicle with power steering, install the drive belt. Adjust the belt tension, then tighten the pump assembly. Disconnect the power steering return line at the pump housing, and connect the lines at the bracket on the frame left side member.

12. Install the alternator drive belts. Adjust the tension of the belts, then tighten the alternator mounting bolts and the adjusting arm bolts. Connect the alternator wires.
13. Install the oil pressure safety switch. Connect the oil pressure safety switch wires, the choke control cable, and the oil pressure and engine temperature sending unit wires.
14. Install the radiator and shroud assembly in the chassis with the fan positioned in the shroud.
15. Install the fan on the crankshaft damper. Install the radiator shutter assembly.
16. Connect the radiator outlet hose at the water pump and the radiator inlet hose at the intake manifold. Install the radiator drain cock.
17. Apply sealer to the heater return hose adapter and install the adapter in the water pump.
18. Connect the heater hose and install the retaining bracket on the intake manifold.
19. Install the radiator supply tank and bracket (with the coil). The cab lock release spring bracket is retained by the radiator supply tank upper bolt. Connect the radiator supply tank tube to the front thermostat housing. Connect the oil filter hose at the valve rocker arm cover. Connect the cab latch anti-rattle springs.
20. Connect the resistor, tachometer and distributor wires to the coil. Install the oil level dipstick.
21. Install the accelerator cable retaining bracket on the radiator bracket and air deflector. Install the bracket for the choke and throttle cable and tachometer wire on the radiator bracket. Install the accelerator retracting spring.
22. Connect the hand throttle control cable and the accelerator cable at the carburetor. Connect the tachometer drive cable.
23. Connect the battery ground strap.
24. Fill and bleed the cooling system. Fill the crankcase with proper grade and quantity of engine oil.

On a vehicle with power steering, fill the power steering pump following the recommended procedure.

25. Operate the engine at fast idle and check all gaskets and hose connections for leaks.
26. Install the air cleaner. Connect the closed positive crankcase ventilation hose, if so equipped. Lower and lock the cab.

LN AND LNT-SERIES

Removal

1. Support the hood and fender in a vertical position.
2. Disconnect the battery ground strap at the battery.
3. Drain the cooling system and the crankcase.
4. Disconnect the radiator upper hose

at the intake manifold and the radiator lower hose at the water pump.
5. Disconnect the crankcase ventilation system hose at the air cleaner, and remove the air cleaner assembly.
6. Remove two nuts attaching the radiator support rods to the radiator.
7. Bleed the air system and disconnect the lines from the shutterstat. Disconnect the power steering lines, if so equipped. Drain the oil into a suitable container.
8. Remove the bolts attaching the fan blade to the water pump hub. Remove the fan blade, pulley and belts.
9. Remove the nuts attaching the radiator support to frame crossmember.
10. Remove the bolts attaching the regulator to radiator support and position the regulator aside.
11. Remove the shutter, radiator and support assembly from the vehicle.
12. Disconnect the heater hoses at the water pump and at the intake manifold.
13. Disconnect the accelerator linkage at the pedal extension.
14. Disconnect the choke control and throttle control cables at the carburetor.
15. Disconnect the tachometer cable at the governor.
16. Disconnect the flex fuel line at the tank line.
17. Disconnect the fuel cut-off switch and the oil pressure sending unit wires.
18. Disconnect the temperature and safety switch wires fron the sending units.
19. Disconnect the coil secondary high tension wire from the coil and remove the bolt attaching the wiring harness to the intake manifold. Disconnect the coil primary wire from the coil. Position the harness out of the way.
20. Remove the nut attaching the alternator-ground wire to the alternator. Disconnect alternator lead wires.
21. Remove the nuts attaching the right exhaust inlet pipe to the exhaust manifold. Remove the pipe.
22. Remove the nuts attaching the left exhaust inlet pipe to the exhaust manifold. Remove the pipe.
23. Disconnect the starter cable at the starter and remove the starter shield and starter.
24. Remove the bolts attaching the flywheel housing cover to the engine and flywheel housing.
25. On a vehicle equipped with an air compressor, loosen the outlet line at the air compressor and allow the air to escape, then disconnect the line. Disconnect the air compressor governor line at the air compressor.
26. Remove the engine front support attaching bolts, nuts and washers.
27. Remove the accelerator retracting spring and the fuel inlet line from the carburetor.
28. Disconnect the distributor vacuum line at the carburetor and the governor control rod from the carburetor.
29. Remove the nuts and washers attaching the carburetor to the intake manifold and remove the carburetor.
30. Install eye bolts in the left front and right rear cylinder head tapped holes. Attach lifting tool 6000-BE.
31. Position the floor crane to the engine and attach the chain to the lifting tool.
32. Position a floor jack under the transmission and raise it approximatley 1/2 inch.
33. Remove the bolts attaching the engine to the flywheel housing.
34. Remove the engine from the vehicle.

Installation

1. Attach the engine lifting eye bolts and sling and remove the engine from the work stand.
2. Carefully lower the engine into the chassis. Make sure the exhaust manifolds are properly aligned with the muffler inlet pipes, and that the clutch disc is properly centered (Group 16).
3. Install the bolts that attach the engine to the flywheel housing and tighten to specifications.
4. Remove the lifting sling and eye bolts from the engine.
5. Remove the jack from under the transmission.
6. Install the engine front support bolts, washers, and nuts, then tighten them to specifications.
7. Position the carburetor to intake manifold gasket on the manifold, and install the carburetor with the washers and nuts.
8. Connect the governor control rod to the carburetor.
9. Connect the distributor vacuum line and fuel inlet line to the carburetor.
10. Connect the tachometer cable to the governor.
11. Connect the throttle cable and choke to the carburetor. Connect the accelerator retracting spring.
12. Connect the accelerator linkage to pedal extension.
13. Connect the lead wires and ground wire to the alternator.
14. Position the wiring harness to the engine and connect the temperature sending unit, safety switch, and coil. Install a ground bolt to the intake manifold. Connect the coil secondary high tension wire to the coil.
15. On a vehicle equipped with an air compressor, connect the outlet line and governor line to the compressor. On a vehicle equipped with power steering, connect the power steering lines.
16. Connect the fuel line to the tank line.
17. Position the starter gasket and install the starter to the engine with one bolt, washer, and nut. Do not tighten.
18. Install the starter shield and tighten the starter attaching nuts and bolts.
19. Connect the starter cable to the starter.
20. Install the flywheel housing cover and attaching bolts.
21. Position the left exhaust manifold to muffler inlet pipe gasket and connect the pipe to the manifold.
22. Position the right exhaust manifold to muffler inlet pipe gasket and connect the pipe to the manifold.
23. Position the radiator shutter, radiator, and support assembly in the vehicle.
24. Install the washers and nuts attaching the radiator support to the crossmember.
25. Install the water pump pulley, drive belts and fan.
26. Connect the radiator lower hose to the water pump and the upper hose to the intake manifold.
27. Connect the heater hose to the water pump and the intake manifold.
28. Adjust the belt tension.
29. Connect the radiator support rods to the radiator support.
30. Connect the lines to the shutterstat.
31. Install the air cleaner assembly. Connect the crankcase ventilation system hose to the air cleaner.
32. Install the regulator on the radiator support.
33. Fill and bleed the cooling system.
34. Fill the crankcase with the proper grade and quantity of engine oil.

On a vehicle with power steering, fill the power steering pump following the recommended procedure.

35. Connect the battery ground strap to the battery.
36. Operate the engine at fast idle and check all gaskets and hose connections for leaks. Make necessary adjustments.
37. Close the hood and fenders and lock in place.

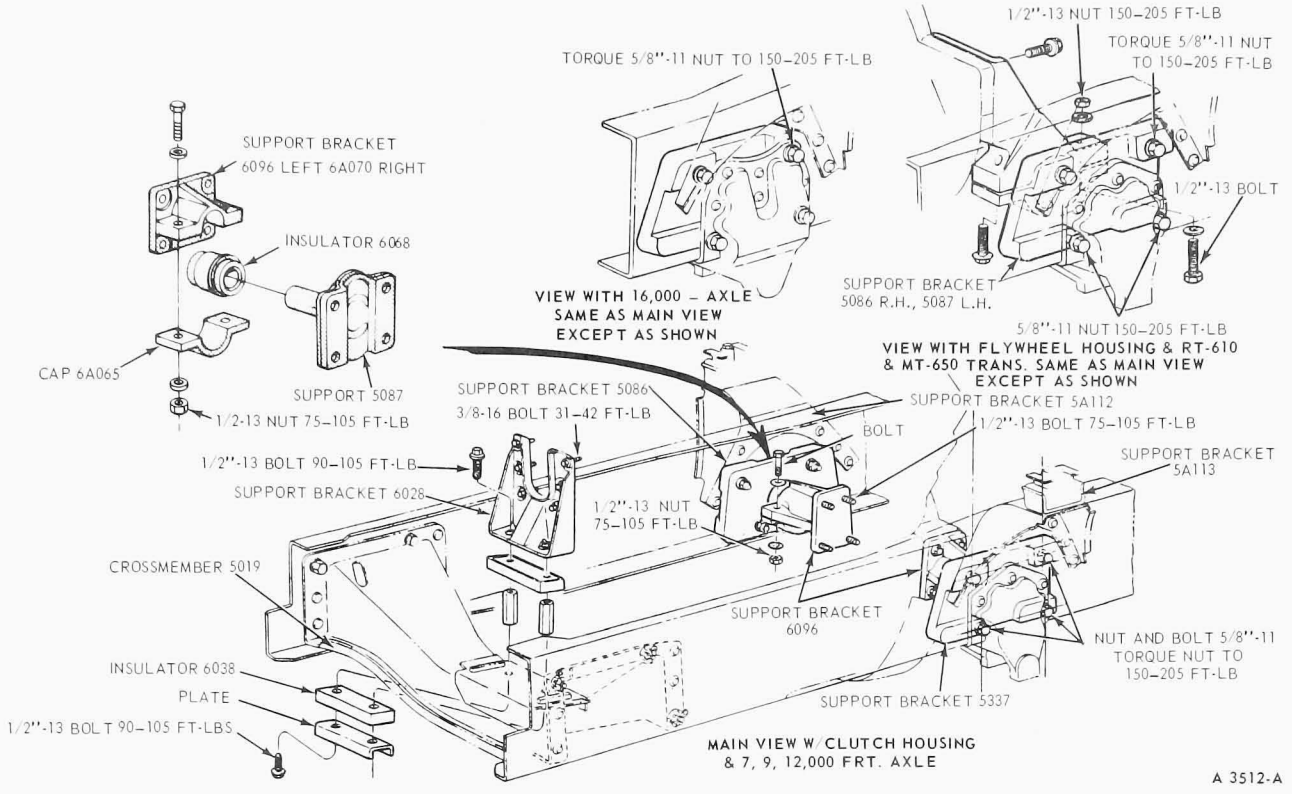

FIG. 9 Engine Supports—L, LT, LTS, LN and LNT-Series

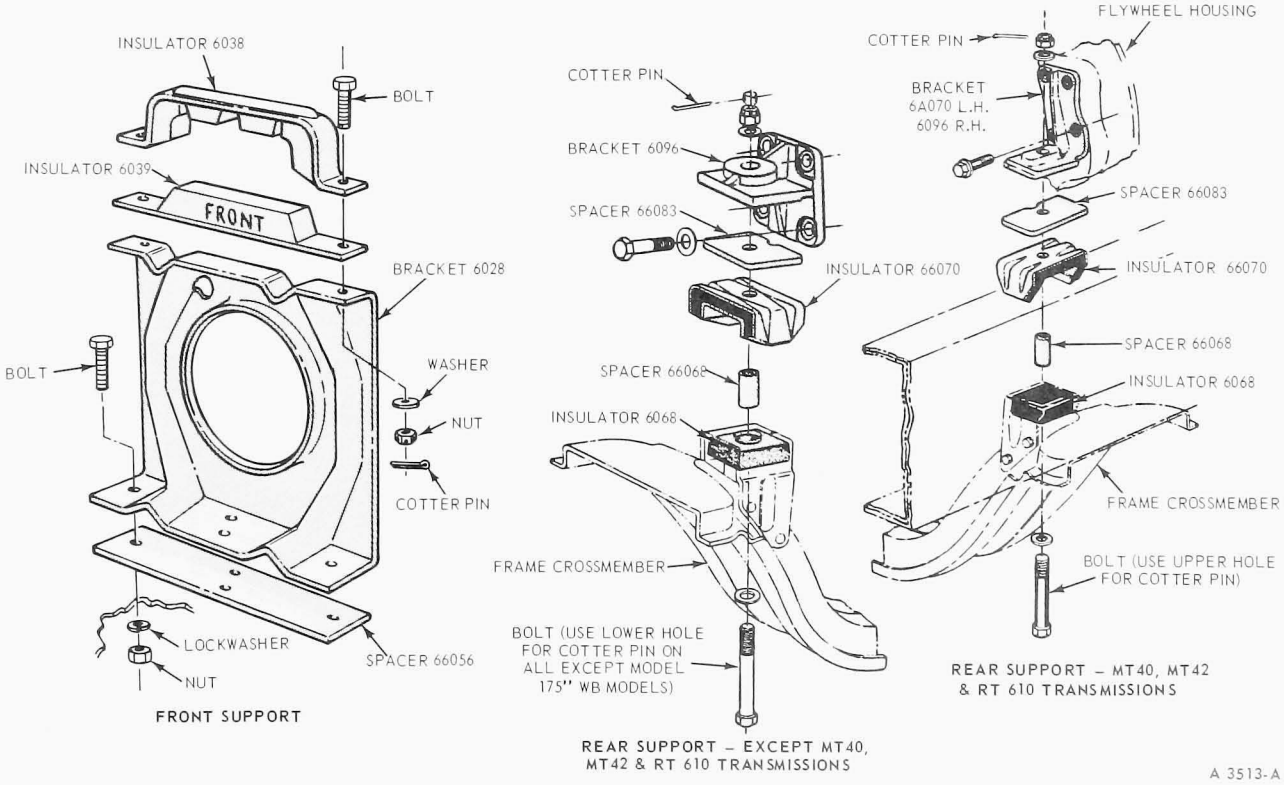

FIG. 10 Engine Supports—C and CT-Series

ENGINE FRONT SUPPORTS

The engine is supported at the front and on each side at the rear of the crankcase (Figs. 9 and 10).

L, LT, LTS, LN AND LNT-SERIES

Removal

1. Remove the two upper insulator attaching bolts (Fig. 9).
2. Remove the two lower insulator attaching bolts and remove the lower insulator, spacers and plate.
3. Place a wood block on a jack, then raise the engine high enough to remove the upper insulator.

Installation

1. Torque the engine support bracket-to-crossmember attaching bolts to specification.
2. Position a new upper insulator on the support bracket (Fig. 9).
3. Lower the engine enough to start the attaching bolts and washers in the spacers, then remove the jack.
4. Secure the lower insulator and plate to the support bracket with the attaching bolts and washers. Torque the four insulator attaching bolts to specification.

C AND CT-SERIES

Removal

1. Disconnect the alternator adjusting arm at the engine front support insulator and remove the air compressor idler pulley.
2. Remove the front support insulators to front support bracket cotter pins, attaching nuts, flat washers and bolts (Fig. 10).
3. Position a jack and wood block under the oil pan and raise the engine slightly.
4. Remove the upper and lower insulators.

Installation

1. Position the upper and lower insulators on the front support bracket.
2. Install, but do not tighten, the front support insulator bolts, flat washers, and nuts.
3. Lower the engine and remove the jack and wood block. Tighten the nuts and attaching bolts to specifications and insert new cotter pins.
4. Connect the alternator adjusting arm and install the air compressor idler pulley.
5. Adjust the drive belts.

ENGINE REAR SUPPORTS

L, LT, LTS, LN AND LNT-SERIES

Removal

1. Remove the two capscrews from the engine rear support bracket and remove the cap.
2. Place a wood block on a jack and raise the rear of the engine just enough to remove the weight from the rear supports.
3. Remove the four bolts that attach the engine rear support to the frame side rail and remove the support and insulator.

Installation

1. Position a new insulator on the engine rear support (Fig. 9). Position the support and insulator to the frame side rail. Install and torque the attaching bolts to specification.
2. Lower the engine and remove the jack.
3. Install and torque the capscrews in each engine rear support bracket and cap.

C AND CT-SERIES

Removal

1. Remove the cotter pin from the engine rear mount bolt, then remove the mounting bolt, lower insulator, and spacer (Fig. 10).
2. Position a jack under the transmission and raise the rear of the engine.
3. Remove the upper insulator.

Installation

1. Position the upper insulator.
2. Lower the rear of the engine and remove the jack.
3. Align the rear of the engine with a drift pin and position the lower insulator and spacer.
4. Install the engine mounting bolt and nut and tighten them to specifications.
5. Install a new cotter pin in the mounting bolt. Be sure the cotter pin is in the correct hole in the bolt according to the vehicle model. The hole nearest the end of the mounting bolt is used for 175 inch wheel base. The other hole is used for the remainder of the vehicle series.

OIL COOLER

Removal

1. Drain the cooling system.
2. Remove the oil cooler cover and gasket and the oil cooler and gasket.
3. Remove the relief valve plug and gasket; then remove the spring and plunger. The oil cooler assembly is shown in Fig. 11.

Installation

1. Install the relief valve plunger (with the open chamber up), spring, gasket and plug in the cover.
2. Place a new cooler gasket, with sealer on both sides, on the block. Position the oil cooler in the block.
3. Place a new cover gasket on the cover with sealer on both sides and install the cover, then tighten the cover bolts to specifications.
4. Open the air bleed valve at the front of the intake manifold and fill and bleed the cooling system.

CRANKCASE VENTILATION REGULATOR VALVE

Removal

1. Remove the crankcase ventilation exhaust tube by disconnecting the exhaust tube from the crankcase ventilation outlet and from the regulator valve in the intake manifold (Fig. 12).
2. Remove the regulator valve assembly and the rubber connection.

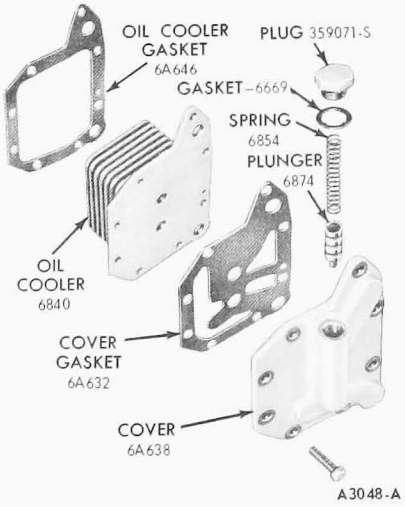

FIG. 11 Oil Cooler Assembly

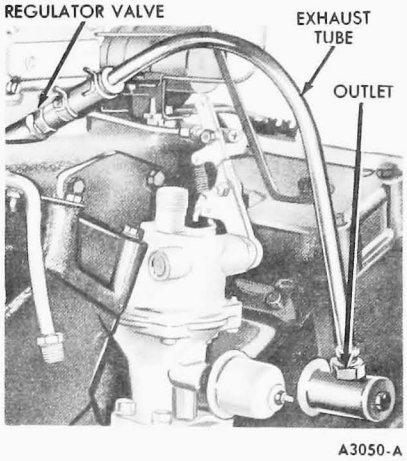

FIG. 12 Crankcase Ventilation System Regulator Valve Installed

Installation

1. Install the regulator valve in the intake manifold.
2. Position and install the rubber connection and exhaust tube on the engine.

VALVE ROCKER ARM COVER AND ROCKER ARM

Removal

Because five cylinder head bolts also serve to retain the pedestals for the valve rocker arm shaft assembly, each time the valve rocker arm shaft assembly is removed, the cylinder head gasket must be replaced.

1. Follow steps 1 thru 4 under Cylinder Head Removal.
2. Release the spring tension on the valve rocker arms by loosening the adjusting screws.
3. Remove the valve rocker arm shaft assembly and the oil baffle plate.
4. Follow steps 7 thru 10 under Cylinder Head Removal.

Installation

1. Follow steps 1 thru 7 under Cylinder Head Installation.
2. Position the oil baffle plate and the valve rocker arm shaft assembly on the cylinder head. Install the bolts and flat washers but do not tighten.
3. Follow steps 9 thru 17 under Cylinder Head Installation.

INTAKE MANIFOLD

Removal

1. Drain the cooling system. Disconnect the radiator upper hose at the water pump.
2. Remove the clamp retaining the radiator shutter air lines to the cross braces. Remove the cross braces.
3. Disconnect the air tubes at the carburetor air duct, then remove the air duct assembly.

On a tilt cab, unclamp the oil filler hose at the valve rocker arm cover, then remove the oil filler hose and radiator supply tank, brackets, and hoses. Disconnect the hose at the air cleaner and remove the air cleaner and brackets.

4. Disconnect the coil secondary high tension lead and the distributor primary wire at the coil.
5. Remove the distributor cap and spark plug wires as an assembly.
6. Remove the cooling system air vent lines.
7. Disconnect the heater hoses at the engine and the radiator inlet and outlet hoses.
8. Remove the coil bracket attaching bolts and washers and disconnect the wire at the temperature sending unit, then position the coil assembly and sending unit wire out of the way.
9. Disconnect the choke control cable at the carburetor and the governor control rod at the governor. Disconnect the vacuum assist brake line and the positive crankcase ventilation exhaust tube at the intake manifold.
10. Disconnect the accelerator linkage at the accelerator assembly and the hand throttle control cable at the carburetor. Remove the accelerator retracting spring.
11. Disconnect the oil pressure safety switch wires.
12. Disconnect the carburetor fuel inlet line and remove the retaining clamps from the manifold.
13. Slide the clamp on the intake manifold coolant outlet hose toward the water pump.
14. Disconnect the tachometer cable at the governor and position the cable out of the way.
15. Remove the intake manifold attaching bolts, then remove the intake manifold and carburetor as an assembly.

Installation

The intake manifold assembly is shown in Fig. 13.

1. Clean the intake manifold gasket surfaces. Apply sealer to the intake manifold gaskets and position them on the cylinder heads.
2. Position the intake manifold and carburetor as an assembly on the cylinder heads. Install the bolts and lock washers, then tighten the bolts to specifications.
3. Connect the crankcase ventilation exhaust tube.
4. Connect the carburetor inlet line and retaining clamps. Connect the oil pressure safety switch wires.
5. Install the accelerator retracting spring. Connect the hand throttle control cable, the accelerator linkage and the tachometer cable.
6. Connect the choke control cable, the governor and control rod, the heater hoses, and the radiator hoses.
7. Install the coil and connect the temperature sending unit wire. Connect the distributor primary wire and coil high tension lead at the coil. Connect the vacuum assist brake line.
8. Install the cooling system air vent lines, and the distributor cap and spark plug wire assembly. Connect the radiator upper hose.
9. Install the cross braces and the clamp retaining the radiator shutter air lines.

On a tilt cab, install the air cleaner and brackets. Install the radiator support tank, bracket, and hoses. Connect the oil filler hose to the valve rocker arm cover.

10. Open the air bleed valve at the front of the intake manifold. Fill the cooling system. When coolant is discharged at the bleed valve, close it finger tight. Operate the engine at fast idle and check for coolant leaks.
11. Install the carburetor air duct assembly and connect the air tubes. Connect the hose to the air cleaner.

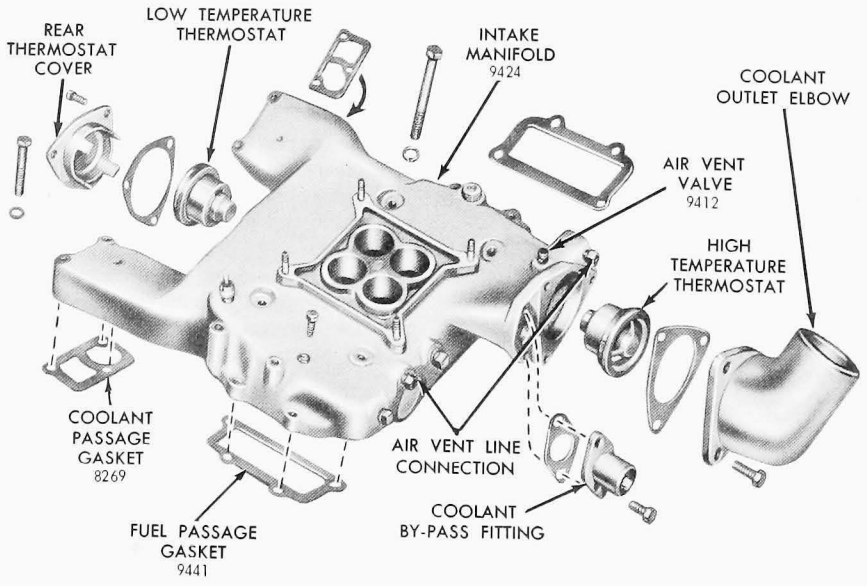

FIG. 13 Intake Manifold Assembly

EXHAUST MANIFOLDS

Removal

1. Disconnect the exhaust manifold(s) at the muffler inlet pipe(s).
2. Straighten the lock tab on the washers. Remove the exhuast manifold attaching bolts and remove the exhaust manifold and heat shield.

Installation

1. Clean the mating surfaces of the exhaust manifold and cylinder head. Scrape the gasket material from the mounting flange of the exhaust manifold and muffler inlet pipe. Position a new muffler inlet pipe gasket over the studs of the exhaust manifolds.
2. Apply graphite grease to the mating surface of the exhaust manifold. Position the heat shield and exhaust manifold on the cylinder head. Connect the exhaust manifold to the muffler inlet pipe. Install the exhaust manifold tab washers and attaching bolts. Torque the bolts to specifications, working from the center to the ends. Lock the bolts by bending one tab on the washer over a flat on the bolt. Install the muffler inlet pipe lock washers and attaching nuts. Torque the nuts to specifications.

CYLINDER HEADS

Removal

1. Remove the intake manifold assembly following the procedure under Intake Manifold Removal.
2. Remove the air cleaner and support bracket. Disconnect the oil pressure sending unit wire and tachometer cable at the governor. Remove the governor.
3. Remove the valve push rod cover and valve rocker arm covers.
4. Disconnect the muffler inlet pipes at the exhaust manifolds.
5. Release the spring tension on the valve rocker arm by loosening the adjusting screws.
6. Remove the valve rocker arm shaft assembly and the oil baffle plate.
7. Remove the valve push rods in sequence (Fig. 14).
8. Install standard eye bolts with 5/8-18 threads in he cylinder head and attach the engine lifting sling (Fig. 15).
9. Remove the remaining cylinder head bolts. Raise the cylinder head and remove it from the engine. Remove and discard the cylinder head gasket.
10. Place the cylinder head on a work bench and remove the exhaust manifold and heat shield. Install the holding fixtures.

Installation

1. Clean the cylinder head and cylinder block gasket surfaces. Coat the threads of the cylinder head bolts with engine oil.
2. Remove the cylinder head holding fixtures and install the heat shield and the exhaust manifold. Install the spark plugs.
3. Install standard eye bolts with 5/8-18 threads in the cylinder head and attach the engine lifting sling.
4. Guided by the word TOP on the gasket, install the gasket over the cylinder head dowels. **Gasket sealer must not be used on the cylinder head gasket.**
5. Position the cylinder head on the engine (Fig. 15). **Slide the flat washers on the cylinder head bolts.**
6. Install the five outside bolts with the flat washers but do not tighten. Remove the lifting sling and eye bolts.
7. Apply Lubriplate or equivalent to both ends of the push rods. Install the push rods in their proper sequence making sure the lower ends are positioned in the tappet socket.
8. Position the oil baffle plate and the valve rocker arm shaft assembly on the cylinder head. Install the remaining five cylinder head bolts with flat washers but do not tighten.
9. The cylinder head bolt tightening procedure is performed in three progressive steps. Follow the sequence shown in Fig. 16. Tighten the bolts to specification. When the cylinder head bolts have been tightened following this procedure it is not necessary to retorque them after extended operation. They may, however, be checked and retorqued if desired.
10. Perform a preliminary valve clearance adjustment. Install the governor. Connect the tachometer cable and oil pressure sending unit wire.
11. Coat one side of the valve push rod cover gasket with oil-resistant sealer. Lay the cemented side of the gasket in place on the block and cylinder head. Position the cover making sure that the gasket seats evenly all around the block. Install the bolts with new washers. Be sure the washers are installed with the rubber side toward the cover. Tighten the bolts following the sequence in Fig. 17.
12. Install the intake manifold and related parts following steps 1 thru 8 under Intake Manifold Installation.

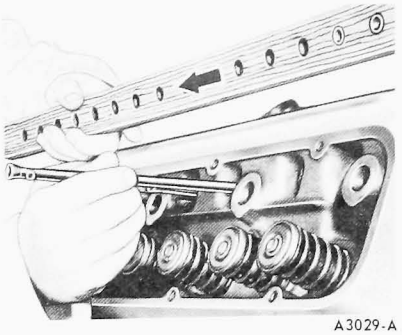

FIG. 14 Removing Push Rod

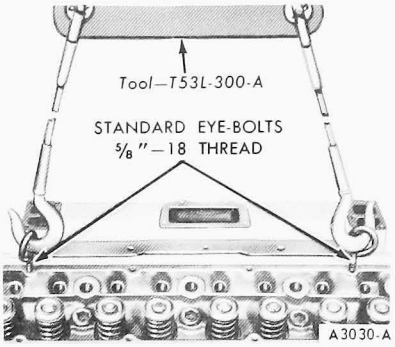

FIG. 15 Removing or Installing Cylinder Head

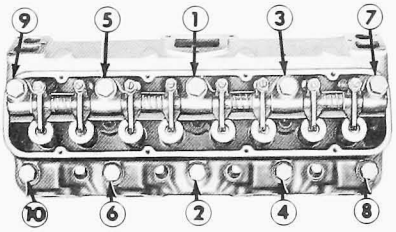

FIG. 16 Cylinder Head Bolt Tightening Sequence

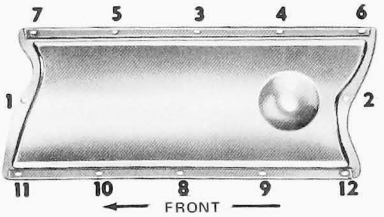

FIG. 17 Valve Push Rod Cover Bolt Tightening Sequence

13. Connect the muffler inlet pipes to the exhaust manifolds.
14. Open the air bleed valve at the front of the intake manifold and fill and bleed the cooling system. Operate the engine until the engine temperatures have stabilized. Check the valve clearance when engine temperatures are stabilized with the engine idling and adjust it if necessary.
15. Check all hose connections and gaskets for leaks. Coat one side of the valve rocker arm cover gaskets with oil-resistant sealer, and lay the cemented side of the gaskets in place in the covers.
16. Install the valve rocker arm covers, making sure that the gaskets seat evenly all around the head. Install the attaching screws and tighten them to specifications. Install the air cleaner and support brackets.
17. Adjust the engine idle speed and fuel mixture.

VALVE SPRING, RETAINER AND STEM SEAL

Broken valve springs or leaking or damaged valve stem seals and retainers may be replaced without removing the cylinder head, provided damage to the valve or valve seat has not occurred.

Removal

1. Remove the air cleaner and the valve rocker arm cover.
2. Remove the applicable spark plug. Install an auxiliary starter switch. **Crank the engine with the ignition switch off.**
3. Crank the engine until the applicable piston is on TDC after the compression stroke. Be sure that both valves are closed. **Be sure that the piston is on TDC to prevent the crankshaft from turning when the air is applied.**
4. Backout the adjustment screw and remove the push rod. Install an air line with an adapter in the spark plug hole.
5. Push the rocker arm to one side and secure it in this position.
6. Turn on the air supply. Using the valve spring compression tool (tool K-D915), compress the valve and remove the valve spring retainer locks, the sleeve, spring retainer, and the valve spring.
7. Remove the valve stem seal.

Installation

1. Install a new valve stem seal. Place the spring in position over the valve. Install the spring retainer and sleeve. Compress the valve spring and install the valve spring retainer lock.
2. Apply Lubriplate or equivalent to both ends of the push rod. Install the push rod, making sure the lower end of the rod is positioned in the tappet push rod cup.
3. Remove the wire securing the valve rocker arm and slide the rocker arm into position. Turn off the air and remove the air line and adapter. Install the spark plug and spark plug wire.
4. Perform a preliminary valve clearance adjustment (Part 21-01).
5. Temporarily install the valve rocker arm cover and connect the spark plug wires.
6. Start the engine, and after engine temperatures are stabilized, perform a hot valve clearance adjustment (Part 21-01).
7. Install the air cleaner.

VALVE LIFTERS

Removal

1. Drain the cooling system.
2. Remove the intake manifold and valve push rod cover following the procedure outlined in this section.
3. Remove the valve rocker arm covers.
4. Back off the valve clearance adjusting screws, turning the crankshaft damper as necessary to follow the firing order and remove the valve push rods keeping them in order so that they can be installed in their original locations.
5. Remove and replace one tappet at a time. If the tappets are difficult to remove, use the tool shown in Fig. 18. Apply Lubriplate or equivalent to each tappet foot. Then coat the remainder of each tappet and tappet bore with heavy engine oil before installation.

Installation

1. Install the valve push rod cover by following step 11 under Cylinder Head Installation.
2. Lubricate each end of the push rods with Lubriplate or equivalent. Install the valve push rods (in sequence) and the intake manifold following the procedure under Intake Manifold Installation.
3. Perform a preliminary valve clearance adjustment (Part 21-01). Install the distributor cap and connect the spark plug wires and the coil secondary high tension lead.
4. Open the air bleed valve at the front of the intake manifold and fill and bleed the cooling system. Start the engine. Adjust the ignition timing. Check the hose connections and gaskets for leaks.
5. Operate the engine until the engine temperatures have stabilized. Check and adjust the valve clearance. Install the air cleaner. Adjust the engine idle speed and fuel mixture.

WATER PUMP

Removal

1. Drain the cooling system. Disconnect the radiator lower hose, heater hose, and the water by-pass hose at the water pump. Remove the fan belt(s).

On L-and LT-Series vehicles, remove the fan and pulley and lower them into the bottom of the radiator shroud. Remove the bolts attaching the water pump to the water pump housing and remove the water pump and gaskets.

On C-Series vehicles, remove the water pump attaching bolts and remove the water pump, pulley, and gaskets as an assembly.

Installation

Before a water pump is re-installed, check it for damage. If it is damaged and requires repair, replace it with a new pump or install a rebuilt pump obtained from a Ford-Authorized Reconditioner.

1. Position new gaskets coated on both sides with water-resistant sealer, on the water pump housing, then install the water pump. Install the attaching bolts and torque them to specifications. Install the fan and pulley on the hub, then install the fan belt(s). Adjust the belt tension.

On C-Series vehicles, install the water pump, pulley, and gaskets as an assembly.

2. Connect the radiator lower hose, heater hose, and water by-pass hose to the water pump. Open the air bleed valve at the front of the intake manifold and fill and bleed the cooling system, warm up the engine, and check for leaks.

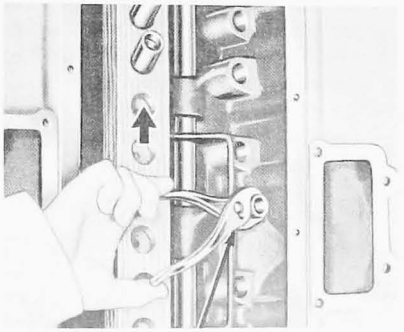

FIG. 18 Removing Tappet

CYLINDER FRONT COVER AND TIMING GEARS

Removal

1. Drain the cooling system and the crankcase.
2. Remove the fan, shroud, radiator and radiator shutter.
3. Remove the alternator, power steering pump, and air compressor drive belts.

On the L-or LT-Series vehicles, remove the upper front support insulator attaching bolts. Lift the front of the engine approximately one inch with a floor jack to allow removal of the damper.

4. Remove the damper capscrew and washer. Install the removal tool and remove the damper (Fig. 19).
5. Remove the air compressor idler pulley and disconnect the alternator adjusting arm at the cylinder front cover.
6. Remove the water pump and housing as an assembly.
7. Remove the engine front support bracket, and the oil level dipstick.
8. Remove the bolts fastening the cylinder front cover to the block and to the oil pan. Using a thin bladed knife cut the oil pan gasket flush with cylinder block face prior to separating the cover from the cylinder block. Remove the cylinder front cover.
9. Discard the cylinder front cover gasket.
10. Remove the crankshaft front oil slinger.
11. Check the backlash between the camshaft gear and the crankshaft gear with a dial indicator. Hold the gear firmly against the block while making the check. Refer to the specifications for the backlash limits.
12. Check the camshaft and crankshaft gear runout with a dial indicator. If the gear runout is excessive, replace the gear or gears.
13. Align the timing marks on the timing gears (Fig. 20). Remove the camshaft gear attaching bolts, then remove the camshaft gear.
14. To remove the crankshaft gear, install the tool shown in Fig. 21 and pull the gear off the shaft.

Installation

1. Install the crankshaft gear (Fig. 22) and the camshaft gear with the timing marks aligned (Fig. 20), then install the camshaft gear attaching bolts. **The bolts are unequally spaced. Tighten the bolts to specifications.**
2. Install the crankshaft front oil slinger.
3. Clean all oil pan and cylinder block-to-front cover gasket surfaces.
4. Coat the gasket surface of the oil pan with sealer, cut and position the required section of a new gasket on the oil pan, apply sealer at the corners.
5. Coat the gasket surfaces of the block and cover with sealer, and position a new gasket on the block.
6. Position the cylinder front cover on the cylinder block. **Use care when installing the cover to avoid seal damage or possible gasket mislocation.**
7. Install the cylinder front cover-to-seal alignment tool into proper position. It may be necessary to force the cover downward in a manner to slightly compress the pan gasket. This operation can be facilitated by using a suitable tool at the cover attaching bolt hole locations in the cylinder block.
8. Coat the threads of the attaching bolts with oil-resistant sealer. While

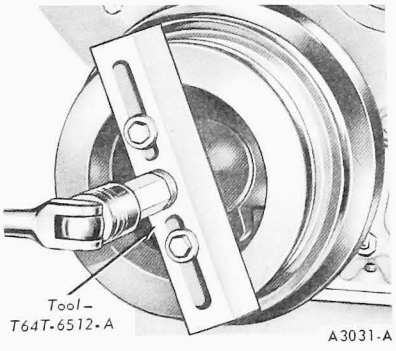

FIG. 19 Removing Damper

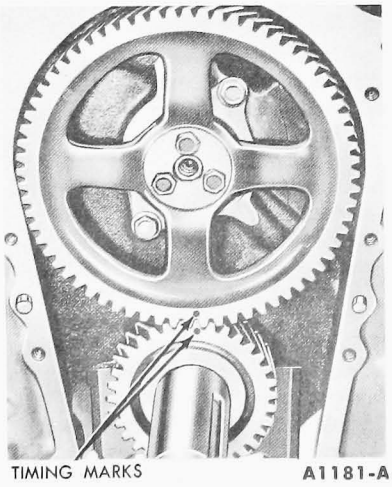

FIG. 20 Timing Mark Alignment

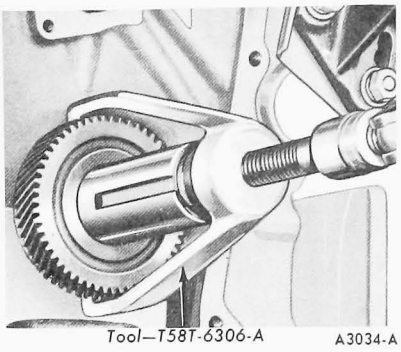

FIG. 21 Removing Crankshaft Gear

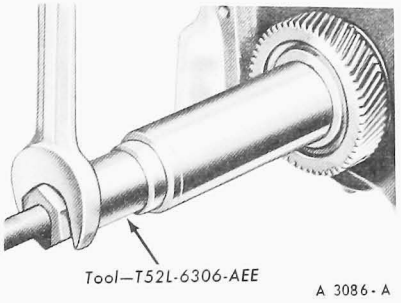

FIG. 22 Installing Crankshaft Gear

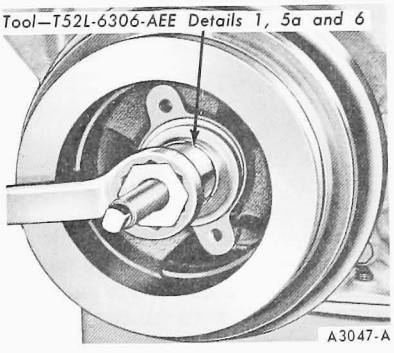

FIG. 23 Installing Damper

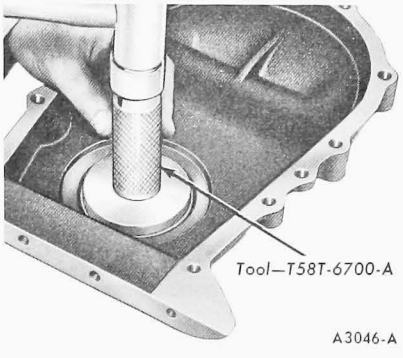

FIG. 24 Installing Oil Seal

pushing in on the pilot, install and torque the oil pan-to-cover attaching bolts to specifications. Install and torque the cover attaching bolts to specification. Remove the pilot.
9. Install the engine front support bracket.
10. Apply sealer to the water pump housing gasket and position it on the block; then install the water pump and housing assembly.
11. Install the air compressor idler pulley and the alternator adjusting arm on the cylinder front cover.
12. Lubricate the crankshaft with a white lead and oil mixture and lubricate the oil seal rubbing surface with grease.
13. Clean and inspect the oil sealing surface on the crankshaft damper hub, following the procedures in Part 21-01. Apply Lubriplate or equivalent to this surface. Align the damper keyway with the key on the crankshaft, then install the damper (Fig. 23).
14. Install and adjust the drive belts.
15. Install the fan, shroud, radiator and radiator shutter.
16. Fill and bleed the cooling system.
17. Fill the crankcase with the proper grade and quantity of engine oil.

FRONT OIL SEAL

It is good practice to replace the oil seal each time the cylinder front cover is removed.
1. Drive out the old seal with a pin punch.
2. Clean out the recess in the cover.
3. Coat a new seal with grease (Fig. 24). Drive the seal in until it is fully seated in the recess. Check the seal after installation to be sure the spring is properly positioned in the seal.

CAMSHAFT

Removal
1. Following the procedures outlined in their respective sections, remove the intake manifold and the cylinder front cover.
2. Turn the crankshaft as necessary to follow the firing order, then back off the valve clearance adjustment screw. Slide the rocker arm to one side and remove the valve push rods in sequence.
3. Remove the distributor and governor. Remove the push rod cover.
4. Remove the valve tappets keeping them in order so that they can be replaced in their original position (Fig. 18).
5. Remove the crankshaft front oil slinger. Align the timing marks on the camshaft and crankshaft timing gears (Fig. 20).
6. Remove the camshaft thrust plate attaching bolts. Remove the camshaft gear, spacer, thrust plate and camshaft as an assembly (Fig. 25).

Installation

The camshaft and related parts are shown in Fig. 26.

If a new camshaft is to be installed, remove the gear, spacer, and thrust plate from the old camshaft and install them on the new camshaft. Apply a coating of Lubriplate or equivalent to each camshaft lobe. Apply heavy engine oil to each camshaft bearing journal and to each bearing in the cylinder block.
1. Oil the camshaft bearing journals and apply Lubriplate or equivalent to all the lobes as detailed above then carefully slide it through the bearings. Be sure the camshaft is installed so that the timing mark on the camshaft gear is aligned with the timing mark on the crankshaft gear (Fig. 20).

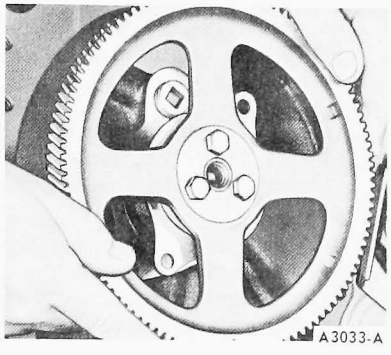

FIG. 25 Removing or Installing Camshaft

2. Install the thrust plate attaching bolts and torque them to specifications. Check the camshaft end play and gear backlash.
3. Install the crankshaft front oil slinger. Install the cylinder front cover and related parts and the crankshaft damper following the procedure under Cylinder Front Cover and Timing Gears Installation.
4. Apply Lubriplate or equivalent to the foot of each tappet. Coat the tappet bore and the remainder of each tappet with heavy engine oil. Install the valve tappets in sequence.
5. Lubricate the ends of each push rod with Lubriplate or equivalent. Install the push rods in sequence.
6. Perform a preliminary valve clearance adjustment.
7. Install the valve push rod chamber gasket and cover by following step 11 under Cylinder Head Installation. Install the governor.
8. Install the water pump, and the oil level dipstick.
9. Crank the engine until No. 1 piston is on TDC.
10. Install the governor and position the distributor in the block with the rotor at the No. 1 firing position with the breaker points open. Install the distributor hold-down clamp.
11. Install the intake manifold assembly and related parts following the procedure under Intake Manifold Installation.
12. Install the distributor cap and connect the spark plug wires and the coil secondary high tension lead.
13. Install the radiator shutter, fan, shroud, and radiator.
14. Open the air bleed valve at the front of the intake manifold. Fill the cooling system. When coolant is

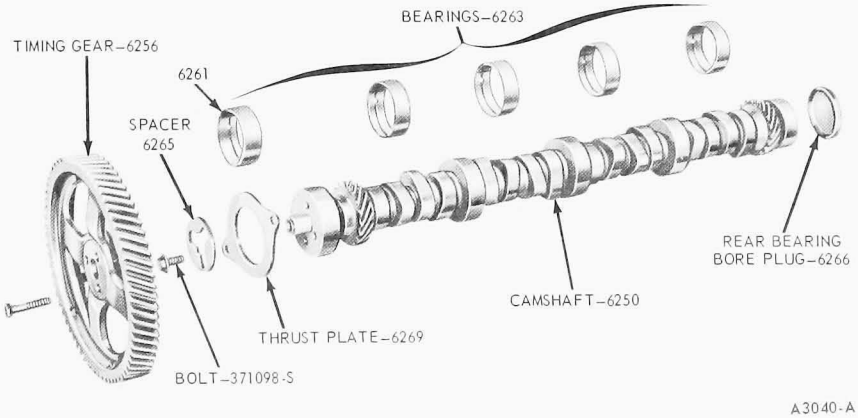

FIG. 26 Camshaft Assembly

discharged at the bleed valve, close it finger tight.

15. Start the engine. Adjust the ignition timing. Check all hose connections and gaskets for leaks.
16. Operate the engine until the engine temperatures have stabilized, then check and adjust the valve clearance.
17. Install the valve rocker arm covers and the air cleaner.

FLYWHEEL

Removal

1. Remove the transmission from the flywheel housing (Group 16).
2. Remove the clutch from the flywheel (Group 16). After these components are removed, remove the flywheel attaching bolts and remove the flywheel through the bottom of the housing.

Installation

1. Install the flywheel on the crankshaft flange, then tighten the attaching bolts to specifications.
2. To check flywheel face runout or replace flywheel ring gear for manual-shift transmissions, refer to Part 21-01.
3. Install the clutch (Group 16) and the transmission (Group 16). Install the flywheel housing dust cover.

CLUTCH PILOT BUSHING

Removal

1. Disconnect the transmission from the engine and slide it to the rear as outlined in Group 16.
2. Remove the pressure plate and the clutch disc.
3. Remove the pilot bushing.
4. Coat the pilot bushing bore in the crankshaft with a small quantity of wheel bearing lubricant. Avoid using too much lubricant because it may be thrown onto the clutch disc when the clutch rotates.

Installation

1. Install the replacement bushing.
2. Install the clutch disc and the pressure plate assembly.
3. Connect the transmission to the engine (Group 16).

CAMSHAFT BEARING BORE PLUG

Removal

1. Slide the transmission to the rear and remove the clutch pressure plate and disc.
2. Remove the flywheel attaching bolts and remove the flywheel.
3. Follow the instructions in Part 21-01, Core Plug Replacement to install the plug.

Installation

1. Install the flywheel.
2. Install the clutch pressure plate and disc, and install the transmission.

OIL PAN AND OIL PUMP

Removal

1. Drain the oil from the crankcase and remove the oil level dipstick. Remove the oil pan and discard the gasket.
2. If the oil pump is to be removed, remove the oil pump and pick-up tube assembly. Discard the oil pump gasket. Remove the intermediate drive shaft from the engine.

Installation

1. Insert the oil pump drive shaft (intermediate shaft) into the oil pump.
2. Position a new gasket on the pump housing, prime the pump by filling the inlet opening with oil and rotate the pump shaft until oil emerges from the outlet opening. Install the oil pump, shaft, and pick-up tube as an assembly (Fig. 27). **Do not attempt to force the pump into position if it will not seat readily. The drive shaft hex may be misaligned with the distributor shaft. To align, rotate the intermediate shaft into a new position.**
3. Tighten the oil pump attaching bolts to specifications. Remove the oil gasket from the oil pan and block gasket surfaces. Position a new gasket on the oil pan.
4. Hold the oil pan in place against the cylinder block and install two of the attaching bolts on each side of the pan. Install the remaining bolts and tighten them from the center outward to specifications.
5. Fill the crankcase and install the oil level dipstick. Operate the engine and check for oil leaks.

CRANKSHAFT REAR OIL SEAL

To correct an oil leakage condition both the upper and lower crankshaft rear seals must be replaced. Remove the engine; then, remove the crankshaft and replace the seals, following the procedure under Crankshaft Removal and Installation.

If only the main bearings are being replaced while the engine is in the vehicle, it is generally only necessary to replace the lower seal.

MAIN BEARING

The main and connecting rod bearing inserts are selective fit. **Do not file or lap bearing caps or use shims to obtain the proper bearing clearance. Bearings are available for service in standard sizes, 0.001 and 0.002 inch undersize. Refer to the Parts Catalog for other available undersize bearings. Undersized bearings are available for use on journals that have been refinished. Bearings should be checked and fitted to the crankshaft with Plastigage as detailed in Part 21-01 prior to final installation in the engine.**

Removal

1. Drain the crankcase. Remove the oil pan following the procedures under Oil Pan and Oil Pump Removal.
2. **Replace one bearing at a time, leaving the other bearing securely fastened.** Remove the main bearing cap to which new bearings are to be installed.
3. Insert the upper bearing removal tool (Tool 6331E) in the oil hole in the crankshaft journal.
4. Rotate the crankshaft slowly in the direction of engine rotation to force the bearing out of the block.

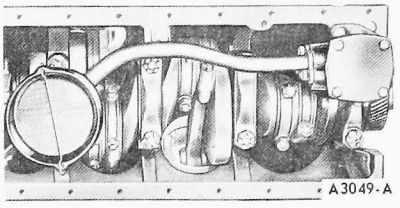

FIG. 27 Oil Pump and Pick-Up Tube Installed

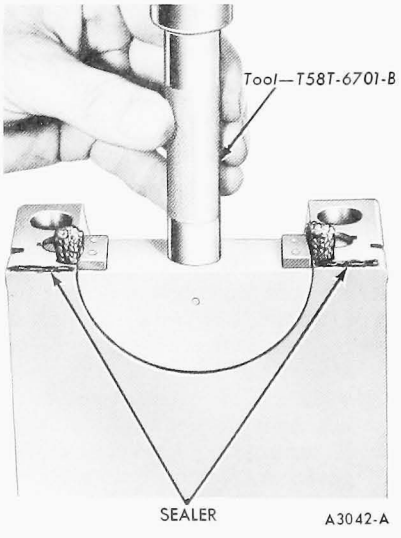

FIG. 28 Installing Seal in Rear Bearing Cap

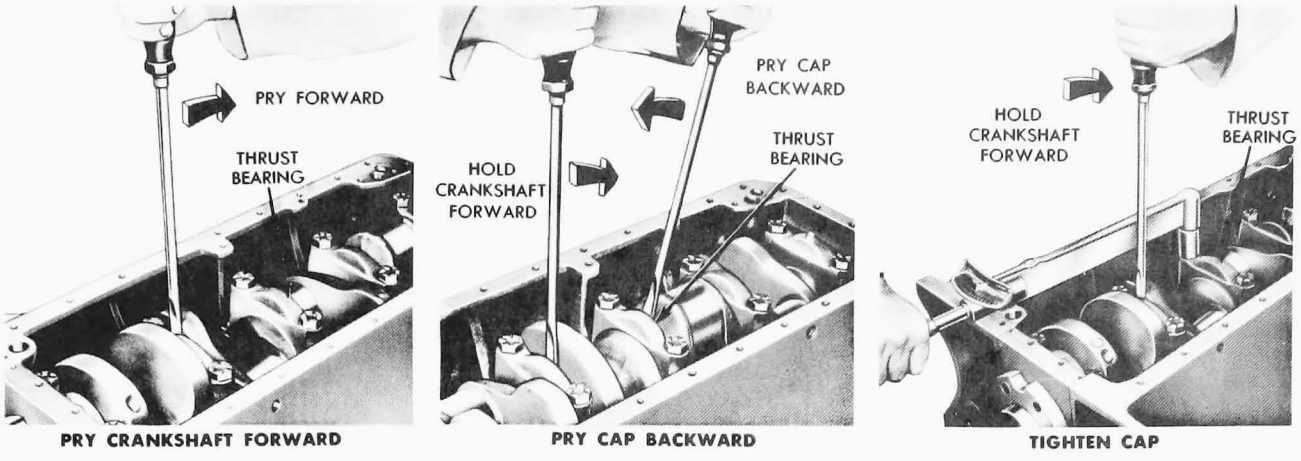

FIG. 29 Aligning Thrust Bearing

5. Clean the crankshaft journal and bearing inserts.

Installation

1. To install the upper main bearing, place the plain end of the bearing over the shaft on the locking tang side of the block. Using Tool 6331E in the oil hole in the crankshaft journal, rotate the crankshaft slowly in the opposite direction of engine rotation until the bearing seats itself. Remove the tool.
2. After the bearing has been checked with Plastigage and found to be satisfactory, apply a light coat of heavy engine oil to the journal and bearings, then install the bearing cap. Torque the cap bolts to specifications.
3. Repeat the procedure for the remaining bearings that require replacement.
4. If the rear main bearing is replaced, replace the lower seal and side seals in the rear main bearing cap. Remove and discard the rear seal and side seals.
5. Preform the new seal by hand to the approximate radius of the cap. Insert the seal in the oil seal groove, seating the center of the oil seal first and allowing the seal to extend equally on both ends. Press the seal down firmly with the thumb at the center of the seal, and then press both ends of the seal into the groove, working from the ends to the center.

Position the seal forming tool as shown in Fig. 28 and complete the seal installation. After installation, cut the ends of the seal 0.015 inch above the cap mounting surface.

6. Apply a thin coating of oil-resistant sealer to the rear main bearing cap at the rear of the top mating surface. **Do not apply sealer to the area forward of the side seal groove. Sealer should be applied up to but not past the side seal.** Install the rear main bearing cap. Torque the main bearing cap bolts to specifications.
7. Dip the side seals in light engine oil, then immediately install them in the grooves. **Do not use sealer on the side seals. The seals are designed to expand when dipped in oil. Using sealer may retard this expansion.** It may be necessary to tap the seals into place for the last 1/2 inch of travel. Do not cut the seal projecting ends.
8. Check the side seals for leaks by squirting a few drops of oil into the parting lines between the retainer and the cylinder block from the outside. Blow compressed air against the seals from the inside of the block. If air bubbles appear in the oil, it indicates possible oil leakage. **This test should not be performed on newly installed seals until sufficient time has been allowed for the seals to expand into the grooves.**
9. If the thrust bearing (No. 3) is replaced, install the thrust bearing cap with the bolts finger tight.
10. Pry the crankshaft forward against the thrust surface of the upper half of the bearing (Fig. 29).
11. Hold the crankshaft forward and pry the thrust bearing cap to the rear. This will align the thrust surfaces of both halves of the bearing.
12. Retain the forward pressure on the crankshaft. Torque the cap bolts to specifications.
13. Force the crankshaft toward the rear of the engine.

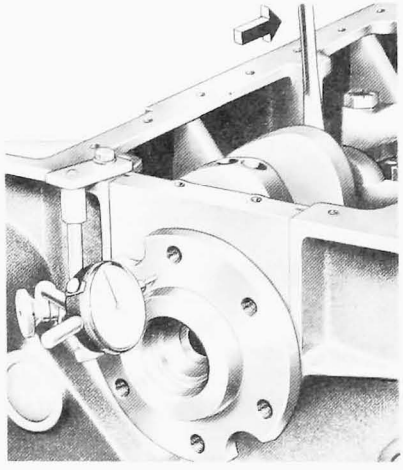

FIG. 30 Checking Crankshaft End Play

14. Install a dial indicator so the contact point rests against the crankshaft flange and the indicator axis is parallel to the crankshaft axis (Fig. 30).
15. Zero the dial indicator. Push the crankshaft forward and note the reading on the dial.

If the end play exceeds the wear limit, replace the thrust bearing. If the end play is less than the minimum limit, inspect the thrust bearing faces for scratches, burrs, nicks, or dirt. If the thrust faces are not damaged or dirty, they probably require alignment. Install the thrust bearing and align the faces following the recommended procedure (steps 19 thru 22) then check the end play.

16. Install the oil pan following the procedures under Oil Pan and Oil Pump Installation.

17. Fill the crankcase with the proper amount and viscosity oil.
18. Operate the engine and check for oil leaks.

CONNECTING ROD BEARINGS

Removal

1. Follow step 1 under Main Bearing Replacement.
2. Remove the cap from the connecting rod to which a new bearing is to be fitted.
3. Follow step 5 under Main Bearing Replacement.

Installation

1. Install the new bearings in the connecting rod and cap.
2. Pull the connecting rod assembly down firmly on the crankshaft journal.
3. After the bearings have been fitted as detailed in Part 21-01, apply a light coat of heavy engine oil to the journal and bearings, then install the connecting rod cap. Torque the nuts to specifications.
4. Repeat the procedure for the remaining connecting rods that require new bearings.

PISTONS AND CONNECTING RODS

Removal

1. Drain the cooling system and the crankcase. Remove the valve rocker arm shaft assemblies, intake manifold, cylinder heads, oil pan, and oil pump following the procedures in this section.
2. Turn the crankshaft until the piston to be removed is at the bottom of its travel. Place a cloth on the piston head to collect the cuttings. Remove any ridge and/or deposits from the upper end of the cylinder bore with Tool T64L-6011-EA or its equivalent. Follow the instructions furnished by the tool manufacturer. **Never cut into the ring travel area in excess of 1/32 inch when removing ridges.**
3. Make sure all connecting rod caps are marked so that they can be installed in their original locations.
4. Turn the crankshaft until the connecting rod being removed is down.
5. Remove the connecting rod cap.
6. Push the connecting rod and piston assembly out the top of the cylinder with the handle end of a hammer. **Avoid damaging the crankshaft journal or the cylinder wall with the connecting rod studs when removing the piston and connecting rod.**
7. Remove the bearing inserts from the connecting rod and cap.
8. Install the cap on the connecting rod from which it was removed.

Installation

1. If new piston rings are to be installed, remove the cylinder wall glaze (Part 21-01, Cylinder block). Follow the instructions of the tool manufacturer. After performing cylinder bore repairs clean the bore(s), following the procedure in Part 21-01.
2. Oil the piston rings, pistons, and cylinder walls with heavy engine oil before installation.

Be sure to install the pistons in the same cylinders from which they were removed, or to which they were fitted. The connecting rod and bearing caps are numbered from 1 to 4 in the right bank, and from 5 to 8 in the left bank, beginning at the front of the engine. The numbers on the connecting rod and bearing cap must be on the same side when installed in the cylinder bore. If a connecting rod is ever transposed from one block or cylinder to another, new bearings should be fitted, and the connecting rod should be numbered to correspond with the new cylinder number.

3. Make sure the ring gaps are properly spaced around the circumference on the piston (Fig. 31).
4. Install a piston ring compressor on the piston and push the piston in with a hammer handle until it is slightly below the top of the cylinder (Fig. 32). Be sure to guide the connecting rods to avoid damaging the crankshaft journals. **Install the piston with the step toward the inside of the engine V.**
5. Check the clearance of each bearing following the procedure in Part 21-01, Fitting Bearings with Plastigage.
6. After the bearings have been fitted, apply a light coat of engine oil to the journal and bearings.
7. Turn the crankshaft throw to the bottom of its stroke; then push the piston all the way down until the rod bearing seats on the crankshaft journal.
8. Install the connecting rod cap. Torque the nuts to specifications.
9. After the piston and connnecting rod assemblies have been installed, check the side clearance between the connecting rods on each connecting rod crankshaft journal (Fig. 33).
10. Clean the oil pump inlet tube screen and the oil pan and block gasket surface. Prime the oil pump and install the pump, oil pan, cylinder heads, valve rocker arm shaft assemblies, and intake manifold following the procedures in this section.
11. Open the air bleed valve at the front of the intake manifold and fill and bleed the cooling system. Close the air bleed valve when the coolant comes out. Fill the crankcase with the proper amount and viscosity oil.
12. Operate the engine and check for oil and coolant leaks. Perform a final (hot) valve clearance adjustment. Adjust the engine idle speed and fuel mixture. Install the valve rocker arm covers. Install the air cleaner.

CRANKSHAFT

The crankshaft and related parts are shown in Fig. 34.

Removal

1. Remove the alternator adjusting arm attaching bolt and spacer from the cylinder front cover. Loosen the alternator mounting bolts and pivot the alternator toward the engine and remove the drive belts.
2. Remove the power steering pump and drive belts.

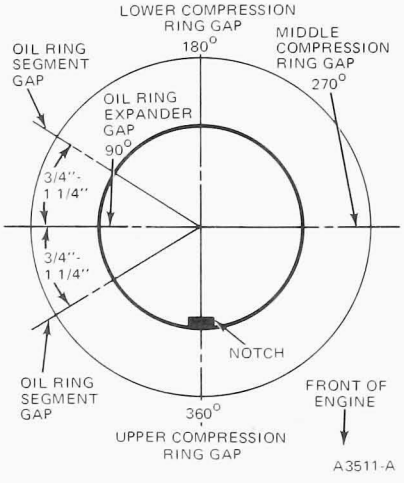

FIG. 31 Piston Ring Gap Spacing

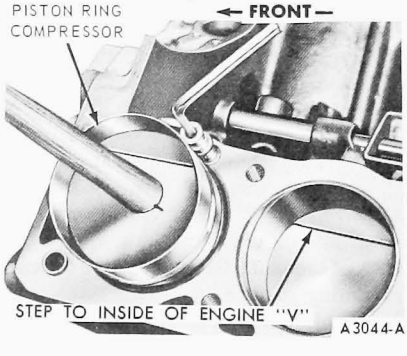

FIG. 32 Installing Piston

3. Remove the air compressor idler pulley and drive belt.
4. Remove the crankshaft damper attaching nut, then remove the crankshaft damper (Fig. 19).
5. Remove the key from the crankshaft. Remove the cylinder front cover.
6. Remove the oil slinger. If it is necessary to remove the crankshaft gear, remove the gear at this time with the tool shown in Fig. 16.
7. Invert the engine on the workstand. Remove the clutch pressure plate and disc. Remove the flywheel. Remove the oil pan and gasket. Remove the oil pump.
8. **Make sure all bearing caps (main and connecting rod) are marked so that they can be installed in the original locations.** Remove the connecting rod bearing caps. Turn the crankshaft until the connecting rod from which the cap is being removed is at the bottom of its stroke. After the cap is removed, push the connecting rod and piston assembly up in the cylinder.
9. Remove the main bearing caps.
10. Carefully lift the crankshaft out of the block so that the thrust bearing surfaces are not damaged. **Handle the crankshaft with care to avoid damage to the finish surfaces.**

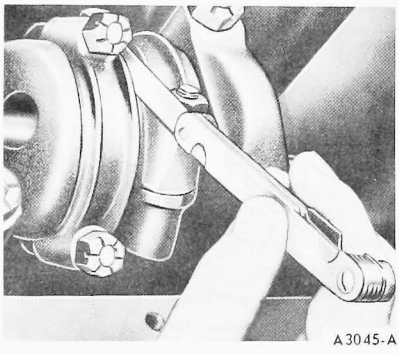

FIG. 33 Checking Connecting Rod Side Clearance

Installation

1. Remove the rear journal oil seal from the block and rear main bearing cap. Remove the side seals.
2. Remove the main bearing inserts from the block and bearing caps.
3. Remove the connecting rod bearing inserts from the connecting rods and caps.
4. Clean the rear journal oil seal groove and the mating surfaces of the block and rear main bearing cap. Preform the new seal by hand to the approximate radius of the cap.

Insert the seal in the oil seal groove, seating the center of the seal first and allowing the seal to extend equally on both ends. Press the seal down firmly with the thumb at the center of the seal, and then press both ends of the seal into the groove, working from the ends to the center. Position the seal forming tool as shown in Fig. 28 and complete the seal installation. After installation, cut the ends of the seals 0.015 inch above the cap mounting surface.

This prevents rough edges which may project from the groove and lodge between the bearing cap and cylinder block.

5. If the crankshaft main bearing journals have been refinished to a definite undersize, install the correct undersize bearings. Be sure the bearing inserts and bearing bores are clean. Foreign material under the inserts will distort the bearing and cause a failure.
6. Place the upper main bearing inserts in position in the bores with the tang fitting in the slot provided.
7. Install the lower main bearing inserts in the bearing caps.
8. Carefully lower the crankshaft into place. **Be careful not to damage the bearing surfaces.** Align the timing mark on the crankshaft gear with the mark on the camshaft gear as the gears are meshed.
9. Check the clearances of each main bearing as detailed in Part 21-01.
10. After the bearings have been fitted, apply a coat of heavy engine oil to the journals and bearings. Install all the bearing caps, except the thrust bearing cap (No. 3 bearing). **Be sure that the main bearing caps are installed in the original locations. Torque the bearing cap bolts to specifications.**
11. Install the thrust bearing cap with the bolts finger tight.
12. Pry the crankshaft forward against the thrust surface of the upper half of the bearing (Fig. 32).

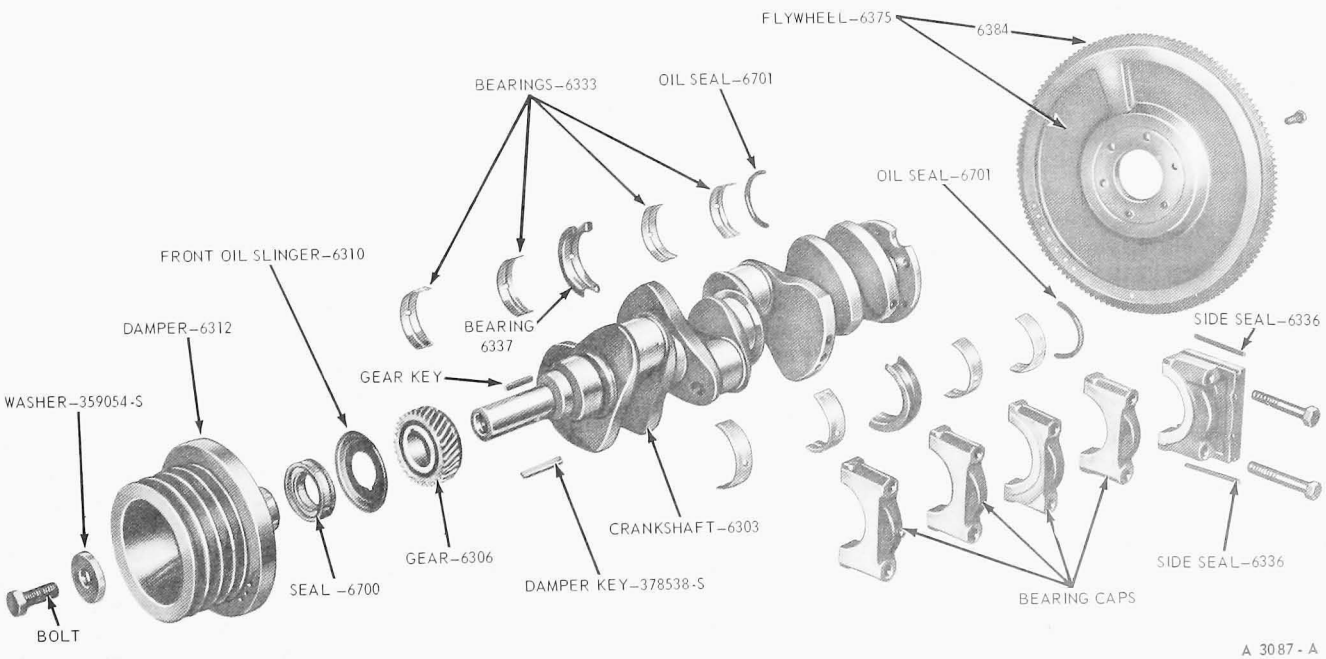

FIG. 34 Crankshaft Assembly

13. Hold the crankshaft forward and pry the thrust bearing cap to the rear. This will align the thrust surfaces of both halves of the bearing.
14. Retain the forward pressure on the crankshaft. Torque the cap bolts to specifications.
15. Force the crankshaft toward the rear of the engine.
16. Install a dial indicator so the contact point rests against the crankshaft flange and the indicator axis is parallel to the crankshaft axis (Fig. 30).
17. Zero the dial indicator. Push the crankshaft forward and note the reading on the dial.

If the end play exceeds the wear limit, replace the thrust bearing. If the end play is less than the minimum limit, inspect the thrust bearing faces for scratches, burrs, nicks, or dirt. If the thrust faces are not damaged or dirty, they probably need alignment. Install the thrust bearing and align the faces following the recommended procedure (steps 11 thru 14), then check the end play.

18. Install the rear main bearing cap oil seal and side seals; then check the seals for leaks by following steps 16 thru 19 under Main Bearing Replacement.
19. Turn the crankshaft throw to the bottom of its stroke. Push the piston all the way down until the rod bearing seats on the crankshaft journal.
20. Install new bearing inserts in the connecting rods and caps. Check the clearance of each bearing following the procedure under Connecting Rod Bearing Replacement.
21. After the bearings have been fitted, apply a light coat of engine oil to the journals and bearings.
22. Install the connecting rod cap. Torque the nuts to specifications.
23. After the piston and connecting rod assemblies have been installed, check the side clearance between the connecting rods on each connecting rod crankshaft journal (Fig. 33).
24. Clean the oil pan, oil pump, and oil pump screen.
25. Position the flywheel on the crankshaft. Install the attaching bolts. Torque the bolts to specifications.

Use Tool 7653 to center the clutch disc. Install the pressure plate.

If the crankshaft gear was removed, install it on the crankshaft with the tool shown in Fig. 22 with timing marks on the camshaft gear and crankshaft gear in alignment (Fig. 20).

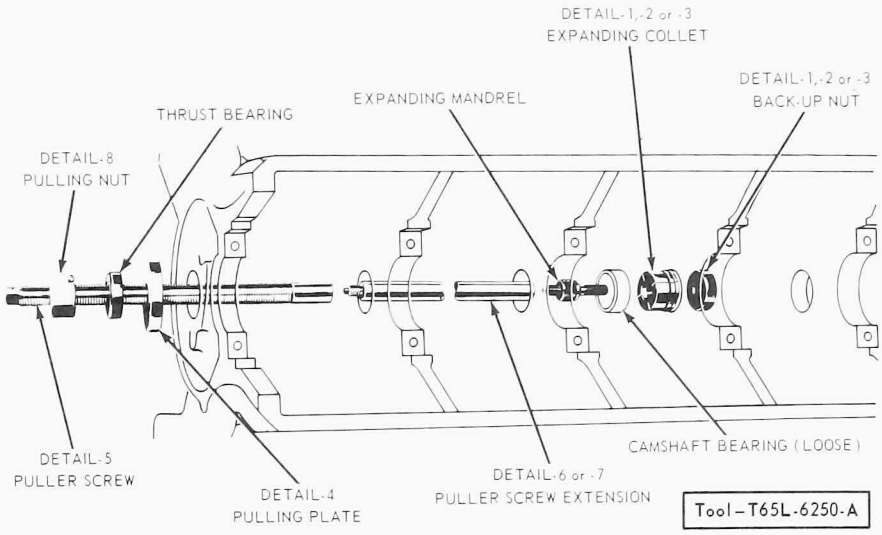

FIG. 35 Replacing Camshaft Bearing

26. Install the oil slinger. Install the cylinder front cover and related parts and the crankshaft damper following the procedure under Cylinder Front Cover and Timing Gears Installation.
27. Prime the oil pump and install the oil pump and the oil pan.
28. Install the air compressor idler pulley and drive belt. Adjust the drive belt tension. Position the alternator adjusting arm and spacer on the cylinder front cover. Install the drive belt and adjust the tension. Tighten the alternator attaching bolts.

CAMSHAFT BEARINGS

Camshaft bearings are available prefinished to size for standard and 0.015 inch undersize journal diameters. The No. 1 camshaft bearing is not interchangeable with the other bearings.

Removal

1. Remove the flywheel, crankshaft and camshaft.
2. Push the pistons to the top of the cylinders to move the connecting rods out of the way.
3. Remove the camshaft rear bearing bore plug.
4. Remove the camshaft bearings.

If the camshaft bearings are being removed with the tool shown in Fig. 35 the following procedure will apply. Select the proper size expanding collet and back-up nut and assemble on the expanding mandrel. With the expanding collet collapsed, install the collet assembly in the camshaft bearing, and tighten the back-up nut on the expanding mandrel until the collet fits the camshaft bearing. Assemble the puller screw and extension (if necessary) as shown and install on the expanding mandrel. Tighten the pulling nut against the thrust bearing and pulling plate to remove the camshaft bearing. Be sure to hold a wrench on the end of the puller screw to prevent it from turning. Repeat the procedure for each bearing. To remove the front bearing, install the

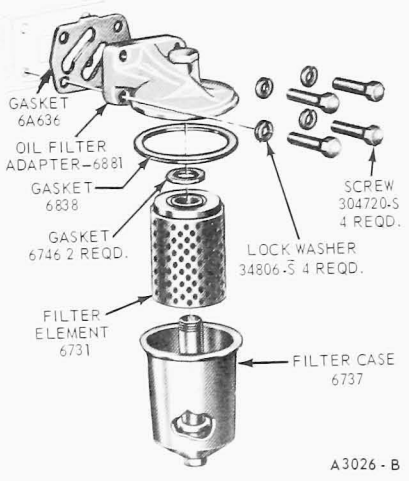

FIG. 36 Oil Filter Assembly

puller screw from the rear of the cylinder block.

Installation

1. Position the new bearing at the bearing bores, and press them in place with the tool shown in Fig. 35. Be sure to center the pulling plate and the puller screw to avoid damage to the bearing. Wrap a cloth around the threads of the puller screw to protect the front bearing or journal. **Failure to use the correct expanding collet can cause severe bearing damage.** Align the oil holes in the bearings with the oil holes in the cylinder block when the bearings are installed. Particular care should be taken with the No. 2 and 4 bearings because they supply oil to the valve rocker arms. Be sure the front bearing is installed below the front face of the cylinder block to specifications.
2. Install the camshaft rear bearing bore plug as detailed in Part 21-01.
3. Clean and install the camshaft, crankshaft, flywheel, and related parts. Install the engine in the vehicle.

OIL FILTER

The oil filter assembly is shown in Fig. 36.

Removal

1. Place a drip pan under the filter. Remove the filter center bolt, then remove the filter assembly and gasket.
2. Remove the filter element, neoprene gasket, spring and retainer.
3. Remove the center bolt from the container and the fiber gasket from the bolt. Discard the filter element.
4. Wash all parts in solvent. Make sure all the openings in the center bolt are clean.

Installation

1. Install the new filter element in the housing following the instructions furnished with the new element.
2. Clean the filter adapter recess, then install a new gasket. Place the filter assembly in position, and thread the center bolt into the adapter finger tight.
3. Rotate the filter assembly slightly, in each direction to make sure the gasket is seated evenly. Tighten the center bolt to specifications. **Do not overtighten the center bolt.**
4. Add oil to the crankcase as necessary; then operate the engine at fast idle, and check for leaks.

DISASSEMBLY AND ASSEMBLY

When installing nuts or bolts (refer to the torque specifications at end of this Part), oil the threads with light weight engine oil. **Do not oil threads that require oil-resistant or water-resistant sealer.**

ENGINE

Disassembly

1. Remove the distributor cap and spark plug wires as an assembly.
2. Remove the cooling system air vent lines.
3. Remove the coil.
4. Disconnect the governor control rod at the governor.
5. Remove the carburetor fuel inlet line. Remove the crankcase ventilation regulator valve and exhaust tube.
6. Slide the clamp on the intake manifold coolant outlet hose toward the water pump.
7. Remove the intake manifold attaching bolts; then remove the intake manifold.
8. Remove the intake manifold coolant outlet hose elbow and gasket from the intake manifold and remove the front thermostat.
9. Remove the rear thermostat housing cover and gasket; then remove the rear thermostat.
10. Remove the distributor.
11. Remove the governor.
12. Remove the valve push rod cover attaching screws, then remove the cover. Discard the cover gasket.
13. Remove the spring tension on the valve rocker arms by loosening the adjusting screws.
14. Remove the valve rocker arm shaft assembly and the oil baffle plate.
15. Remove the valve push rods in sequence (Fig. 14).
16. Install standard eye bolts with 5/8-18 threads in the cylinder head and attach the engine lifting sling (Fig. 15).
17. Remove the remaining cylinder head bolts. Raise the cylinder head and carefully remove it from the engine.
18. Place the cylinder head on a work bench and remove the exhaust manifold and heat shield, then install the holding fixtures. The flat washers can be reused.
19. Loosen the oil filter center bolt; then remove the filter assembly and gasket.
20. Remove the oil filter adapter and discard the gasket.
21. Remove the oil cooler cover, gasket, oil cooler, and gasket.
22. Remove the relief valve plug and gasket; then remove the spring and plunger.
23. Invert the engine on the work stand.
24. Remove the oil pan. Discard the gasket.
25. Remove the oil pump. Discard the gasket. Remove the intermediate drive shaft from the engine.
26. Remove the clutch from the flywheel.
27. Remove the flywheel.
28. Remove the drive belts.
29. Remove the damper capscrew and washer. Install the removal tool and remove the damper (Fig. 19).
30. Remove the alternator and adjusting arm as an assembly.
31. Remove the air compressor.
32. Remove the water pump and housing as an assembly and the engine front support bracket.
33. Remove the cylinder front cover. Discard the gasket.
34. Remove the valve tappets keeping them in order so that they can be installed in their original position (Fig. 18).
35. Remove the camshaft gear, spacer, thrust plate and camshaft as an assembly (Fig. 25).
36. Remove the crankshaft front oil slinger.
37. Remove the crankshaft gear (Fig. 21).
38. Turn the engine on the workstand so that the front is up.
39. Remove any ridge and/or deposits from the upper end of the cylinder bores with Tool T64L-6011-EA, or equivalent. Turn the crankshaft until the piston to be removed is at the bottom of its travel. Place a cloth on the piston heads to collect the cuttings. Remove any ridge and/or deposits from the upper end of the cylinder bore. Remove the cylinder ridge with a ridge cutter. Follow the instructions furnished by the tool manufacturer. **Never cut into the ring travel area in excess of 1/32 inch when removing ridges.**
40. Make sure all bearing caps (main and connecting rod) are marked so

that they can be installed in the original locations.

41. Turn the crankshaft until the connecting rod being removed is down.
42. Remove the nuts from the connecting rod bolts, then pull the cap off the rod.
43. Push the connecting rod and piston assembly out the top of the cylinder with the handle end of a hammer. **Avoid damage to the crankshaft journal or the cylinder wall when removing the pistons and rod.**
44. Remove the bearing inserts from the connecting rod and caps.
45. Remove the main bearing caps.
46. Carefully lift the crankshaft out of the cylinder block so that the thrust bearing surfaces are not damaged. **Handle the crankshaft with care to avoid possible damage to the finished surfaces.**
47. Remove the rear journal oil seal from the block and rear main bearing cap. Remove the rear bearing cap to block side seals.
48. Drill a 1/2 inch hole in the crankshaft rear bearing bore plug and use Tools T59L-100-B and T58-L-101-A to remove the plug.
49. Remove the camshaft bearings (Fig. 35).

Assembly

Many of the procedures given here are condensed from other sections of this group. For more detailed steps, refer to the index at the beginning of this part or Part 21-01. These indexes will show the pages on which more detailed instructions can be found.

1. Position the new camshaft bearing at the bearing bore, and align the oil holes in the bearings with the oil holes in the cylinder block. Press each bearing into place as shown in Fig. 35. **Be sure the camshaft front bearing is installed below the front face of the cylinder block to specifications.**
2. Check the oil passage that feeds the rocker arm shafts for obstructions by squirting oil into the opening on each cylinder bank and observing the flow through the oil holes at No. 4 camshaft bearing for the left bank and No. 2 camshaft bearing for the right bank.
3. Install a new camshaft rear bearing bore plug as detailed in Part 21-01.
4. If a new camshaft is to be installed, remove the gear, spacer, and thrust plate from the old camshaft and install them on the new camshaft, then install the camshaft.
5. Apply heavy oil on the camshaft bearing journals, camshaft gear and bearings. Apply Lubriplate or equivalent to all camshaft lobes. Carefully slide it through the bearings with the gear, spacer, and thrust plate attached (Fig. 25). Be sure the camshaft is installed so that the timing mark on the camshaft gear is aligned with the center of the crankshaft front bearing bore.
6. Install the thrust plate attaching bolts and tighten them to specifications. Check camshaft end play.
7. Be sure that the rear journal oil seal grooves are clean. Install a new rear journal oil seal in the block. Preform the new seal by hand to the approximate radius of the cap.

Insert the seal in the oil seal groove, seating the center of the seal first and allowing the seal to extend equally on both ends. Press the seal down firmly with the thumb at the center of the seal, and then press both ends of the seal into the groove, working from the ends to the center. Position the seal forming tool as shown in Fig. 28 and complete the seal installation. After installation, cut the ends of the seal 0.015 inch above the cap mounting surface.

8. If the crankshaft main bearing journals have been refinished to a definite undersize, install the correct undersize bearings. Be sure the bearing inserts and bearing bores are clean.

Place the upper main bearing inserts in position in the bores with the tang fitting in the slot provided.

10. Carefully lower the crankshaft into place so that the timing mark on the gear is aligned with the timing mark on the camshaft gear (Fig. 20). **Be careful not to damage the bearing surfaces.**
11. Check the clearance of each main bearing following the procedure in Part 21-01 Fitting Bearings with Plastigage.
12. After the bearings have been fitted, apply a light coat of heavy engine oil to the journals and bearings, then install all the bearing caps except the thrust bearing cap (No. 3 bearing). Install the rear main bearing cap oil seal and side seals, then check the side seals for leaks by following steps 16 thru 19 under Main Bearing Replacement. Torque the bearing cap bolts to specifications.
13. Install the thrust bearing cap and check crankshaft end play by following steps 11 thru 17 under Crankshaft Installation. Check the camshaft gear backlash (Part 21-01).
14. Turn the engine on the workstand so that the front end is up.
15. Install the pistons and connecting rods by following steps 1 thru 8 under Piston and Connecting Rod Installation.
16. Clean the cylinder front cover, water pump, and the cylinder block gasket surfaces. Install a new front oil seal.
17. Coat the gasket surface of the cover and block and the cover bolt threads with sealer.
18. Position a new gasket on the block; then install the cylinder front cover.
19. Install the engine front support bracket. Clean, inspect and polish the oil seal rubbing surface on the crankshaft damper hub (Part 21-01). Install the crankshaft damper (Fig. 23).
20. Refer to Fig. 11 for the oil cooler assembly. Install the relief valve plunger (with the open end up), spring, gasket and plug in the cover. Place a new oil cooler gasket with sealer on both sides on the block. Position the oil cooler in the block. Place a new gasket on the cover with sealer on both sides of the gasket. Install the cover. Tighten the cover bolts to specifications.
21. Apply water-resistant sealer to the water pump housing gaskets and position them on the block. Install the water pump and housing assembly.
22. Install the alternator.
23. Install the air compressor. Install the air compressor idler arm pulley on the cylinder front cover.
24. Install and adjust the drive belts. Install the fan.
25. Invert the engine on the workstand.
26. Insert the oil pump drive shaft into the oil pump.
27. Position a new gasket on the oil pump housing, prime the pump, and install the oil pump, shaft, and pick-up tube as an assembly (Fig. 27). Tighten the oil pump attaching screws to specifications.
28. Remove old gasket sealer from the oil pan and block gasket surfaces.
29. Position a new gasket on the oil pan. Hold the oil pan in place against the cylinder block and install two of the attaching screws on each side of the pan. Install the remaining screws and tighten them from the center outward to specifications.
30. Position the flywheel on the crankshaft and install the attaching bolts. Tighten the bolts to specifications.
31. Install the clutch on the flywheel.
32. Clean the oil filter adapter gasket surfaces. Apply oil-resistant sealer to a new adapter gasket, and install the adapter assembly and gasket.

Install the oil filter assembly following the procedure under Oil Filter Replacement.

33. Clean the old gasket from the cylinder head and block gasket surfaces. Coat the threads of the cylinder head bolts with engine oil.
34. Remove the cylinder head holding fixtures.
35. Install the gaskets and the exhaust manifolds and the spark plugs.
36. Install standard eye bolts with 5/8-18 threads in the cylinder head and attach the engine lifting sling.
37. Guided by the word TOP on the gasket, install the gasket over the cylinder head dowels. **Gasket sealer must not be used on the cylinder head gasket.**
38. Position the cylinder head on the engine (Fig. 15). Slide the flat washers on the cylinder head bolts. Install the five outside bolts with the flat washers but do not tighten. Remove the lifting sling and eye bolts.
39. Dip the tappet foot in Lubriplate or equivalent. Coat the remainder of each tappet and tappet bore with heavy engine oil. Install the tappets in their original bore.
40. Apply Lubriplate or equivalent to both ends of the push rods. Install the push rods in their proper sequence, making sure the lower ends are positioned in the tappet socket.
41. Position the oil baffle plate and the valve rocker arm shaft assembly on the cylinder head.
42. Install the remaining five cylinder head bolts and flat washers but do not tighten.
43. The cylinder head bolt tightening procedure is performed in three progressive steps. Follow the sequence shown in Fig. 16. Tighten the bolts to specifications. When the cylinder head bolts have been tightened as detailed in this procedure, it is not necessary to retorque them after extended operation.
44. Perform a preliminary valve clearance adjustment (Part 21-01). The final valve clearance adjustment is made with the engine installed in the vehicle.
45. Coat one side of the valve push rod cover gasket with oil-resistant sealer. Lay the cemented side of the gasket in place on the block and cylinder head. Install the cover by following step 11 under Cylinder Head Installation.
46. Using a new gasket, position the governor assembly on the cylinder block and install the washers and attaching nuts.
47. Crank the engine until No. 1 piston is on TDC at the end of the compression stroke.
48. Inspect the distributor 0-ring seal and replace it if it is damaged. Position the distributor in the block with the rotor at the No. 1 firing position and the breaker points just start to open. Install the hold down clamp.
49. Clean the intake manifold gasket surfaces (including the front and rear thermostat housing gasket surface if the thermostats were removed).
50. If the thermostats were removed, position them in their respective housing. **Be sure the lower temperature thermostat is installed in the rear of the manifold and the higher temperature thermostat is installed in the front of the manifold.** Apply water-resistant sealer to the thermostat housing gaskets and position them on the intake manifold. Install the intake manifold coolant outlet elbow and the rear thermostat housing cover.
51. Apply oil-resistant sealer to the intake manifold gaskets and position them on the cylinder heads.
52. Position the intake manifold assembly on the cylinder heads. Install the intake manifold bolts and lock washers; then tighten the bolts to specifications.

Install the crankcase ventilation valve and tube.

53. Install the cooling system air vent lines, the distributor cap and spark plug wire assembly. Install the coil. Connect and adjust the governor linkage.
54. Clean the valve rocker arm cover(s). Apply oil-resistant sealer to one side of new cover gasket(s). Lay the cemented side of the gasket(s) in place in the cover(s).
55. Position the cover(s) on the cylinder head(s). Make sure the gasket seats evenly all around the head. Install the bolts (and the wire harness clamps on the left cover). The cover is tightened in two steps. Torque the bolts to specifications. Two minutes later, torque the bolts to the same specifications.

VALVE ROCKER ARM

Disassembly

1. Remove the cotter pins from each end of the valve rocker arm shaft.
2. Slide the rocker arms, springs, and the supports off the shaft. Be sure to identify all parts.
3. If it is necessary to remove the plugs from each end of the shaft, drill or pierce one plug; then insert a steel rod through the drilled plug and knock out the plug on the opposite end. Working from the open end, knock out the remaining plug.

Assembly

1. Lubricate all valve parts with heavy engine oil. Apply Lubriplate or equivalent to the pad of the valve rocker arms.
2. If the plugs were removed from the ends of the shaft, use a blunt tool, or large diameter pin punch and install a plug, cup side out, in each end of the valve rocker arm shaft.
3. Install a cotter pin in one end of the shaft; then install the rocker arms, supports, and springs in the order shown in Fig. 37. Complete the assembly by installing a cotter pin in the end of the shaft.

CYLINDER HEAD

Disassembly

The cylinder head assemblies are interchangeable from one side of the block to the other, provided the coolant air vent line plate is installed at the front of each cylinder head.

1. Install the cylinder head holding fixtures. Remove the deposits from the cylinder head and valve heads with a scraper and a wire brush before removing the valves. **Be careful not to scratch the cylinder head gasket surface.**
2. Compress the valve springs (Fig. 38), then remove the spring retainer lock, and release the spring.
3. Remove the spring retainer, spring, stem seal, and valve. Discard the valve stem seals. Identify all valve parts.

Assembly

1. Lubricate the valve guides and valve stems with heavy engine oil. Apply Lubriplate or equivalent to the tip of the valve stems.
2. Install each valve (Fig. 39) in the valve guide from which it was removed or to which it was fitted.
3. Install a new stem seal on the valve.
4. Position the valve spring over the valve, then install the spring retainer.
5. Compress the spring and install the retainer lock (Fig. 38).
6. Measure the assembled height of the valve spring from the surface of the cylinder head spring pad to the underside of the spring retainer with a scale (Fig. 40).

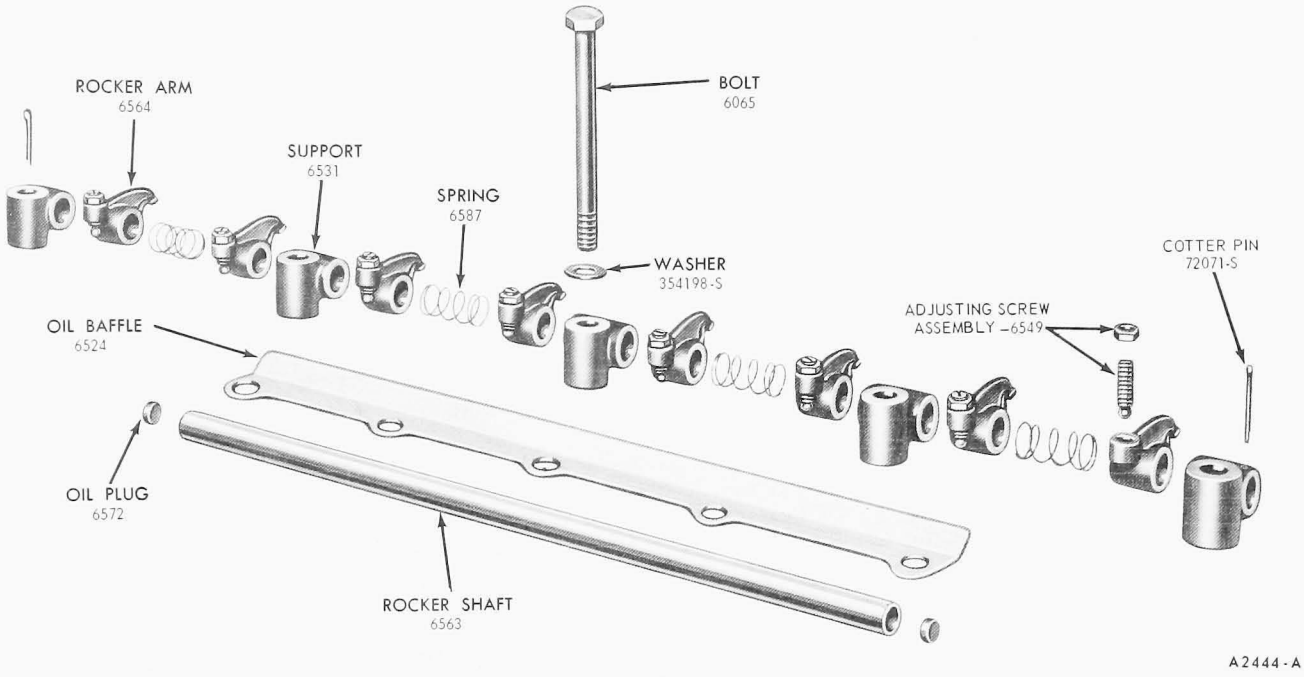

FIG. 37 Valve Rocker Arm Shaft Assembly

7. If the assembled height is greater than the specified height, install the necessary 0.030 inch thick spacer(s) between the cylinder head spring pad and the valve spring to bring the assembled height to within specified length. **Do not install spacers unless necessary. Use of spacers in excess of recommendations will result in overstressing the valve springs and overloading the camshaft lobes which could lead to spring breakage and worn camshaft lobes.**

OIL PUMP

Disassembly

The oil pump assembly is shown in Fig. 41.

1. Remove the oil pick-up tube and screen assembly from the oil pump and discard the gasket.
2. Remove the oil screen retaining wire and remove the screen.
3. Remove the cover attaching bolts, then remove the cover.
4. Remove the inner rotor and shaft assembly, then remove the outer race.
5. Insert a self-threading sheet metal screw of the proper diameter into the oil pressure relief valve chamber plug and pull the plug out of the chamber. Remove the spring and plunger.

Assembly

1. Clean and oil all parts thoroughly.
2. Install the oil pressure relief valve plunger, spring, gasket, and new plug.
3. Install the outer race, and the inner rotor and shaft assembly (Fig. 41). **Be sure to assemble the outer race so the dimple identification on the race is on the same side as the dimple on the rotor. The inner rotor and shaft, and the outer race are serviced as an assembly. One part should not be replaced without replacing the other.**
4. Install the cover and tighten the cover attaching bolts to specifications.
5. Install the screen and retaining wire in the pick-up tube.
6. Position a new gasket and the oil pick-up tube on the oil pump and install the attaching bolts.
7. Prime the pump installing it on the engine by filling the inlet port with engine oil. Rotate the pump shaft to distribute the oil within the pump body.

PISTON AND CONNECTING ROD

Disassembly

1. Mark the pistons and pins to assure assembly with the same rod and installation in the same cylinder from which they were removed.
2. Remove the piston rings. Remove the piston pin retainers using retaining ring pliers. Drive the pin out of the piston and rod. Discard the retainers.

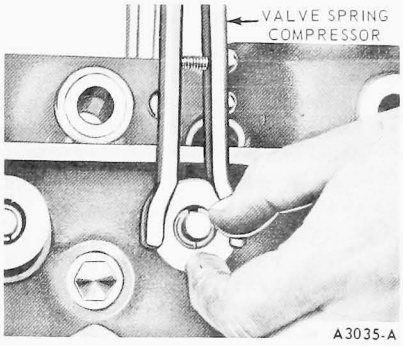

FIG. 38 Compressing Valve Spring

Assembly

The piston, connecting rod, and related parts are shown in Fig. 42.

1. Lubricate all parts with heavy engine oil prior to installation.
2. Position the connecting rod in the piston and push the pin into place. **Assemble the piston and connecting rod as shown in Fig. 43.**
3. Insert new piston pin retainers using retaining ring pliers.
4. Follow the instructions contained on the piston ring package and install the piston rings.
5. Check the ring side clearance of the compression rings with a feeler gauge inserted between the ring and its lower land (step 6 under Fitting Piston Rings).

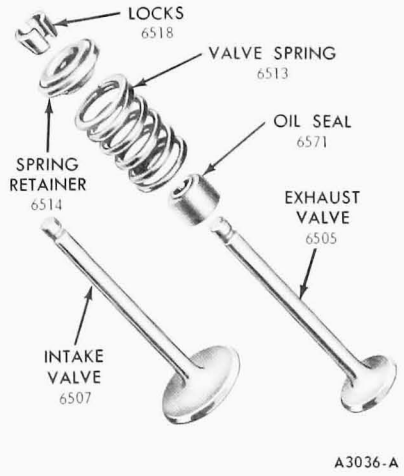

FIG. 39 Valve Assembly

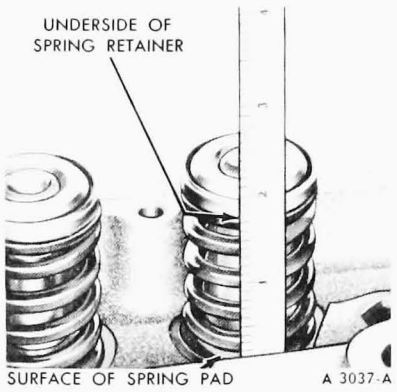

FIG. 40 Valve Spring Assembled Height

6. Be sure the bearing inserts and the bearing bore in the connecting rod and cap are clean. Foreign material under the inserts will distort the bearing and cause a failure. Install the bearing inserts in the connecting rod and cap with the tangs fitting in the slots provided.

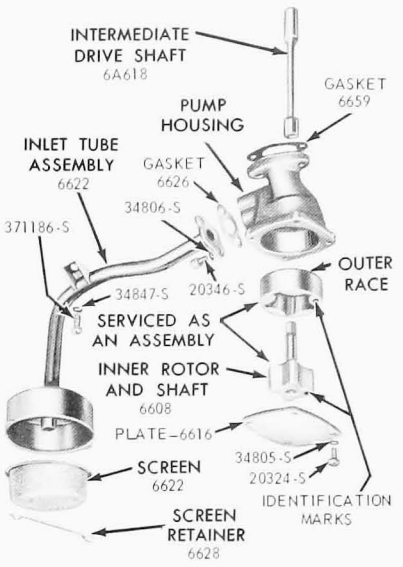

FIG. 41 Oil Pump Assembly

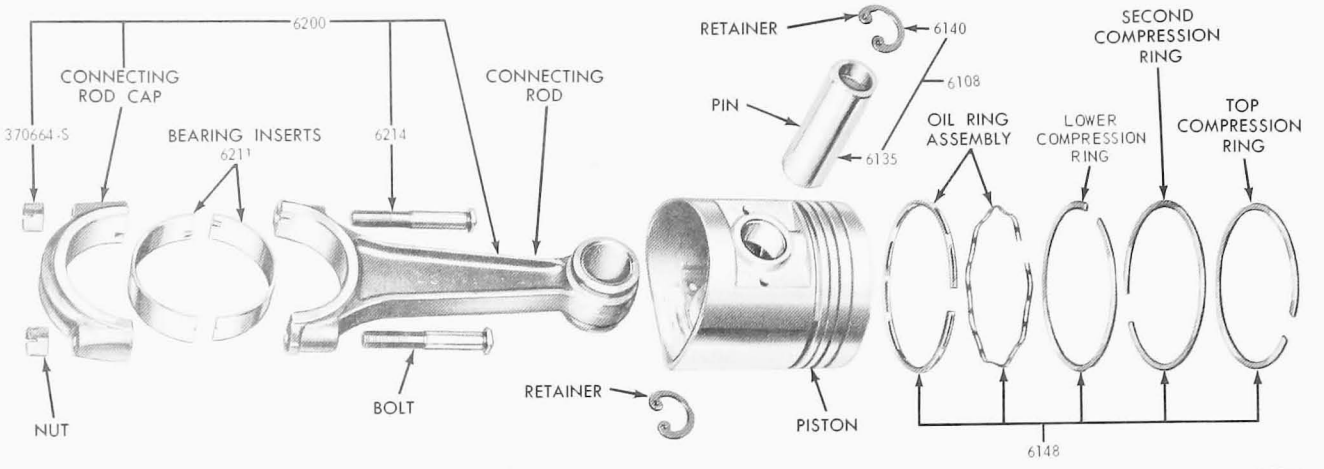

FIG. 42 Piston, Connecting Rod and Related Parts

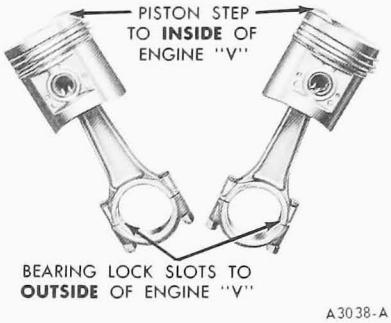

FIG. 43 Connecting Rod and Piston Assembly

SPECIFICATIONS

GENERAL SPECIFICATIONS

Engine ①	Compression Ratio	Bore And Stroke	Belt Tension ② (Lbs.)	Compression Pressure ③	Firing Order	Oil Pressure 2000 rpm	Engine Governed Speed-RPM			
							Manual Transmission		Automatic Transmission	
							Full Load	No Load	Full Load	No Load
401 V-8 (4V)	④	4.125 x 3.75	New 140 Used 110		1-5-4-8-6-3-7-2	35-60 psi	3400	3600	3600	3800
477 V-8 (4V)		4.50 x 3.75					3200 ⑤	3400 ⑤	3400 ⑥	3600 ⑥
534 V-8 (4V)		4.50 x 4.20					3000	3200	3200	3400

① Engine No. Shown is the Piston Displacement in Cubic Inches.
② All belts. A used belt is one that has been in operation for 10 minutes.
③ Lowest reading must be within 75% of highest to be within specifications.
④ Not available at time of printing
⑤ Model 475, Full Load 3400, No Load, 3600
⑥ Model 475, Full Load 3600, No Load, 3800

CYLINDER HEAD

Engine	Combustion Chamber Volume– CC	Valve Guide Bore Dia– Standard Int. And Exh.	Valve Seat Width	Valve Seat Angle	Valve Seat Runout (Maximum)	Valve Arrangement Front to Rear	Valve Seat Insert Bore Diameter– Standard ②	Gasket Surface Flatness ③
401 V-8	109.5–114.0 ①	0.4368–0.4375	Int. 0.090–0.105 Exh. 0.100-0.115	Int. and Exh. 45°	0.002	E-I-E-I-I-E-I-E	Int. 2.2165–2.2175 Exh. 1.7405–1.7415	0.003 inch in any 6 inches or an overall of 0.007
477 V-8	138.0–143.5 ①							
534 V-8	155.5–161.0 ①							

① In cylinder block.
② Valve seat insert to bore interference fit-standard (intake and exhaust 0.003–0.004). The valve seat insert diameter-standard minimum and standard maximum is 0.003 larger than the insert bore diameter.
③ Head gasket surface finish RMS 60–150

VALVE ROCKER ARMS, ROCKER ARM SHAFT, PUSHRODS AND TAPPETS

Engine	Rocker Arm Shaft O D	Rocker Arm To Rocker Shaft Clearance	Rocker Arm Bore Diameter	Rocker Arm Lift Ratio	Valve Push Rod (Maximum Runout)	Valve Tappet or Lifter	
						Standard Diameter	Clearance To Bore ①
401,477,534	0.781–0.782	0.0010–0.0030	0.7830–0.7840	1.58:1	0.020	0.8740–0.8745	0.0005–0.0020

① Wear Limit – 0.005

VALVE SPRINGS

Engine	Valve Spring Pressure– Lbs @ Specified Length		Valve Spring Free Length (Approx)	Valve Spring Assembled Height (Pad to Retainer)	Valve Spring Out of Square (Max)
	Pressure	Wear Limit			
401,477,534	73–81 @ 1.70 171–189 @ 1.28	65 @ 1.70	2.02	1-11/16–1-23/32	5/64 (0.078)

VALVES

Engine	Valve Stem to Valve Guide Clearance		Valve Head Diameter		Valve Face Angle	Valve Face Runout (Maximum)
	Intake	Exhaust	Intake	Exhaust		
401,477,534	0.0010–0.0026 ①	0.0024–0.0040 ①	2.015–2.025	1.630–1.640	44°	0.0015

① Wear Limit 0.0080

Engine	Valve Stem Diameter							
	Standard		0.003 Oversize		0.015 Oversize		0.030 Oversize	
	Intake	Exhaust	Intake	Exhaust	Intake	Exhaust	Intake	Exhaust
401,477,534	0.4349–0.4358	0.4335–0.4344	0.4379–0.4388	0.4365–0.4374	0.4499–0.4508	0.4485–0.4494	0.4649–0.4658	0.4635–0.4644

CAMSHAFT

Engine	Lobe Lift		Theoretical Valve Lift		Camshaft		Camshaft Journal to Bearing Clearance ②	Valve Clearance (Hot Engine)
	Intake	Exhasut	Intake	Exhaust	End Play	Wear Limit		
401, 477, 534	0.2776	0.2776	0.439	0.439	0.001-0.007	0.012	0.001–0.003	0.020

① Maximum allowable lobe lift loss (all engines) 0.005 ② Wear Limit – 0.006

CA1282-B

CAMSHAFT (Continued)

Item	Bearing	Engine 401,477,534	Item	Bearing	Engine 401,477,534
Camshaft Journal Diameter–Standard ①	(No. 1)	2.4740–2.4750	Camshaft Bearings Inside Diameter	(No. 1)	2.4760–2.4770
	(No. 2)	2.37–2.3710		(No. 2)	2.3720–2.3730
	(No. 3)			(No. 3)	
	(No. 4)			(No. 4)	
	(No. 5)			(No. 5)	
Camshaft Bearings Location ②	(No. 1)	0.310–0.330			

① Camshaft Journal maximum runout – 0.005
Camshaft Journal maximum out-of-round – 0.0010

② Distance in inches that the front edge of the bearing is installed towards the rear from the front face of the cylinder block.

CAMSHAFT DRIVE MECHANISM

Engine	Camshaft Gear To Crankshaft Gear Backlash	Camshaft Gear Assembled Face Runout T I R Max	Crankshaft Gear Assembled Face Runout T I R Max
401,477,534	0.002–0.004	0.006	0.006

CYLINDER BLOCK

Engine	Cylinder Bore Diameter ①	Tappet Bore Diameter	Main Bearing Bore Diameter	Distributor Shaft Bearing Bore Diameter	Head Gasket Surface Flatness ②	Crankshaft to Rear Face of Block Runout TIR Max.
401	4.1250-4.1286	0.8752-0.8767	3.3176-3.3184	0.4525-0.4535	0.003 inch in any 6 inches or an overall of 0.006 inch	0.006
477, 534	4.5000-4.5036					

① Maximum out-of-round – 0.001
Wear Limit – 0.005
Maximum taper – 0.001
Wear Limit – 0.010
Cylinder bore surface finish RMS – 15-35

② Head gasket surface finish RMS 401, 477 and 534 – 60-150.

CRANKSHAFT AND FLYWHEEL

Engine	Main Bearing Journal Diameter ①	Main Bearing Journal Runout–Maximum ②	Main Bearing Journal Thrust Face Runout	Main Bearing Journal Max. Taper	Thrust Bearing Journal Length	Main and Rod Bearing Journal Finish RMS Max.	Main and Rod Bearing Journal Thrust Face Finish RMS
401,477,534	3.1246-3.1254	0.0025	0.001	0.0005 Per Inch	1.279–1.281	12	20

① Maximum Out-of-round 0.0004 ② Wear Limit 0.004

Engine	Connecting Rod Journal Diameter ①	Connecting Rod Bearing Journal Maximum Taper	Crankshaft Free End Play	Flywheel Clutch Face Runout	Flywheel Ring Gear Lateral Runout	
					Standard Transmission	Automatic Transmission
401,477,534	2.7092–2.7100	0.0004 Per Inch	0.004–0.008 ②	0.010	0.030	0.028

① Maximum Out-of-round 0.0004 ② Wear Limit 0.012

CRANKSHAFT BEARINGS

Engine	Connecting Rod Bearings			Main Bearings		
	To Crankshaft Clearance		Wall Thickness –Standard ①	To Crankshaft Clearance		Wall Thickness –Standard
	Desired	Allowable		Desired	Allowable	
401	0.0017-0.0025	0.0017-0.0035	0.0957–0.0962	0.0018-0.0025	0.0018-0.0036	0.0951–0.0955
477						
534						

① 0.002 U.S. thickness ..... Add 0.0010 to standard thickness

CONNECTING ROD

Engine	Piston Pin Bore or Bushing I D ①	Connecting Rod Bearing Bore Diameter ②	Connecting Rod Length Center to Center	Connecting Rod Alignment Max. Tot. Difference ③		Connecting Rod Assembly (Assembled to Crankshaft)	
				Twist	Bend	Side Clearance	Wear Limit
401,477,534	1.2201–1.2204	2.9032–2.9040	7.7390–7.7410	0.012	0.004	0.0060–0.0140	0.0170

① Piston pin cushing or bore
Maximum out-of-round 0.0003
Maximum taper 0.0003

② Connecting rod bearing bore maximum out-of-round and taper 0.0004

③ Pin bushing and crankshaft bearing bore must be parrallel and in the same vertical plane within the specified total difference at ends of 8-inch long bar measured 4 inches on each side of rod.

CA1282-B1

PISTON

Engine	Diameter ① Coded Red	Diameter ① Coded Blue	Diameter ① 0.003 Oversize	Piston to Cylinder Bore Clearance ②	Piston Pin Bore Diameter	Ring Groove Width Compression Top	Ring Groove Width Compression Intermed.	Ring Groove Width Compression Bottom	Ring Groove Width Oil
401	4.1233–4.1239	4.1245–4.1251	4.1257–4.1263	0.0028–0.0034	1.2202–1.2205	0.0965–0.0975	0.0965–0.0975	0.0965–0.0975	0.1880–0.1890
477	4.4983–4.4989	4.4995–4.5001	4.5007–4.5013						
534									

① Measured 90° to pin centerline and at pin centering height.
② Refer to Part 21–01 in Shop Manual for the proper procedures for measuring piston to bore clearance.

PISTON PIN

Engine	Length	Diameter Standard	Diameter 0.001 Oversize	Diameter 0.002 Oversize	To Piston Clearance	To Connceting Rod Bushing Clearance
401	3.335–3.350	1.2198–1.2201	1.2208–1.2211	1.2218–1.2221	0.0003–0.0005	0.0002-0.0004
477,534	3.840–3.855					

PISTON RINGS

Engine	Ring Width Compression Ring ① Top	Ring Width Compression Ring ① Bottom	Ring Width Oil Ring	Side Clearance Compression Ring ① Top	Side Clearance Compression Ring ① Bottom	Side Clearance Oil Ring	Ring Gap Compression Ring Top	Ring Gap Compression Ring Bottom	Ring Gap Oil Ring
401,477	0.0929–0.0936	0.0929-0.0936	0.1859–0.1866	0.0029–0.0046 ②	0.0029-0.0046 ②	0.0014–0.0031 ②	0.018–0.028	0.018-0.028 ③	0.013–0.028
534									

① Intermediate ring width and clearance is same as top compression ring
② Wear Limit 0.002 Max. Increase in Total Clearance
③ Intermediate ring gap is the same as bottom compression ring

OIL PUMP

Engine	Relief Valve Spring Tension-Lbs @ Specified Length	Drive Shaft To Housing Bearing Clearance	Relief Valve Clearance	Rotor Assembly End Clearance– (Pump Assembled)	Outer Race To Housing (Radial Clearance)
401	10.7–11.9 @ 1.07	0.0015–0.002	0.0015–0.0029	0.0010– 0.004	0.001-0.013
477,534					

APPROXIMATE OIL PAN CAPACITIES

Crankcase Capacity (Quarts)	ENGINE			
	401,477 and 534 V-8			
	U.S. Measure	9.00 ①	Imperial Measure	7.50 ①

① Add two quarts extra when changing oil filter

TORQUE LIMITS

NOTE: All values given are in ft.-lbs. unless otherwise stated. Oil threads with lightweight engine oil unless the threads require oil resistant or water-resistant sealer.

Item	Engines Applicable	Torque	Item	Engines Applicable	Torque
Cylinder Head Bolts Step 1	401,477,534	130–140	Oil Pan to Cylinder Block	401,477,534	10-15
Cylinder Head Bolts Step 2	401,477,534	150–160	Oil Pan Drain Plug	401,477,534	25–35
Cylinder Head Bolts Step 3	401,477,534	170–180	Intake Manifold to Cylinder Head	401,477,534	23–28
Main Bearing Cap Bolts	401,477,534	150–165	Damper or Pulley to Crankshaft	401,477,534	130–175

TORQUE LIMITS (Continued)

NOTE: All values given are in Ft-LBs unless otherwise stated. Oil threads with lightweight engine oil unless the threads require oil resistant or water resistant sealer.

Item	Engines Applicable	Torque
Exhaust Manifold to Cylinder Head	401,477,534	23-28
Intake to Exhaust Manifold	–	–
Oil Pump to Cylinder Block	401,477,534	23-28
Oil Pump Cover Plate	401,477,534	6-9
Oil Filter Center Bolt	401,477,534	45-50
Flywheel to Crankshaft	401,477,534	100-110
Exhaust Manifold to Muffler Inlet Pipe	Medium and Heavy Duty Trucks	25–30
Engine Governor to Cylinder Block	401,477,534	17-27
Valve Rocker Arm Adjustment Screw-Locknut	401,477,534	30-35
Oil Filter Adapter to Cylinder Block	401,477,534	14-19
Damper or Pulley to Crankshaft	401,477,534	130-175
Water Pump To Cylinder Block to Front Cover	401,477,534	23-28
Oil Pick-Up Tube To Oil Pump	401,477,534	12-15
Valve Rocker Arm Cover	401,477,534	6-8
Valve Push Rod Chamber Cover	401,477,534 Center End Bolts	8-12
	Side Bolts	6-8
Fuel Pump to Cylinder Block or Cylinder Front Cover	–	–
Oil Cooler to Cylinder Block	401,477,534	20-25
Connecting Rod Nuts	401,477,534	60-65
Fuel Filter Center Bolt	401,477,534	18-22
Cylinder Front Cover	401,477,534	35-40
Water Outlet Housing	401,477,534	23-28
Camshaft Sprocket or Gear to Camshaft	401,477,534	20-24
Camshaft Thrust Plate to Block	401,477,534	12-15

TORQUE LIMITS FOR VARIOUS SIZE BOLTS–FT-LBS

CAUTION: If any of the torque limits listed in this table disagree with any of those listed in the preceding tables, the limits listed in the preceding tables prevail.

Size (inches)	1/4–20	5/16–18	3/8–16	7/16–14	1/2–13	9/16–18
Torque (Ft-lbs)	6–9	12–18	22–32	40–55	55–80	85–120

SEALERS

Item	Ford Part No.
Loctite (thread locking compound)	C3AZ 19554 A

CA1282-B3

Diesel Engines

GROUP 22

PART 22-01	PAGE	PART 22-04	PAGE
General Diesel Engine Service	22-01-01	Detroit Diesel Engines	22-04-01
PART 22-03		**PART 22-05**	
Cummins Diesel Engines	22-03-01	Ford V-8 Diesel Engines	22-05-01

PART 22-01 General Diesel Engine Service

COMPONENT INDEX	Page	COMPONENT INDEX	Page
CLEANING AND INSPECTION	01-02	SPECIFICATIONS	01-02
GENERAL INFORMATION	01-01		

GENERAL INFORMATION

This Group covers the adjustments, repairs and the Cleaning and Inspection recommendations for all Diesel engines used in FORD TRUCK VEHICLES. An engine code and application chart is shown in Fig. 1.

Refer to the Truck Diagnosis Manual to assist in resolving any problems that may occur.

Recommendations for periodic maintenance, maintenance instructions, including tests and adjustments, and lubrication charts, including lubricant specifications are contained in Volume 5 of the 1972 Ford Truck Shop Manual.

Refer to the applicable Diesel Shop Manual for complete adjustment, repair and overhaul procedures.

DIESEL ENGINES IDENTIFICATION CHART

Code	Cu. In. Displ.	Engine Prefix	Engine & Model Usage	No. Of Cyl.	Bore And Stroke	Comp. Ratio To 1.0
U	522	Ford-150	F-6000 LN-8000,C-6000	V-8	4.50x4.1	17.5
V	522	Ford-175	F-6000,LN-6000,C-6000 F-7000,LN-6000,B-7000,C-7000 L-8000,LN-8000 LT-8000,LNT-8000,LTS-8000			
4	573	Ford-200	F-7000,LN-7000,C-7000 L-8000,LN-8000,C-8000 LT-8000,LNT-8000,LTS-8000		4.5x4.5	17.0
C	636	Ford-225	L-8000,LN-8000,C-8000 LT-8000,LNT-8000,LTS-8000		4.50x5.0	16.5
8	318.4	Detroit Diesel 6V-53N	L-8000,LN-8000 LT-8000,LNT-8000 LTS-8000	V-6	3.87x4.50	21.0
1	855	Cummins NH-230	L-9000,LN-9000 LT-9000,LNT-9000,LTS-9000 W-9000,WT-9000	I-6	5.50x6.0	15.5
J		Cummins NHC-250	L-9000,LN-9000 LT-9000,LNT-9000,LTS-9000 W-9000,WT-9000			
R	855	Cummins NTC-335	L-9000,LN-9000 LT-9000,LNT-9000 W-9000, WT-9000	I-6	5.50x6.0	14.1
5	855	Cummins NTC-270-E	L-LT-9000 LN-LNT-9000 W-WT-9000	I-6	5.50x6.0	14.1
K	855	Cummins NTC-270-CT	LTS-9000	I-6	5.50x6.0	14.1
Y	927	Cummins N-927	L-LT-LTS-9000 LN-LNT-9000 W-WT-9000	I-6	5.50x6.5	15.2
E	903	Cummins V-903	L-LT-9000 W-WT-9000	V-8	5.50x4.75	16.5
S	426	Detroit Diesel 6-71N=N-65-INJ.	L-9000,LN-9000 LT-9000,LNT-9000 W-9000,WT-9000	I-6	4.25x5.0	18.7
T	568	8V-71NE=N-55-INJ. 8V-71N=N-60-INJ. 8V-71N=N-65-INJ.	L-9000,LT-9000 W-9000,WT-9000	V-8	4.25x5.0	18.7

CA1104-C

FIG. 1 Engine Identification

CLEANING AND INSPECTION

Strict adherence to thorough cleaning, accompanied by reliable inspections, are important factors in providing satisfactory Diesel engine operation.

When delays in completion of repairs or adjustments involve exposure of any openings into the engine or connected systems, close them off with a cover or fill the openings with clean, lint-free cloths until ready to resume work.

When inspection reveals for a definite series of checks or the complete or partial disassembly of a unit, specific instructions will be found in the applicable Diesel Engine Manual.

PART 22-03 Cummins Diesel Engines

Applies to L-,LT-,LTS-,LN-,LNT-,W- and WT-9000 Series

COMPONENT INDEX	Page	COMPONENT INDEX	Page
ENGINE		ENGINE SUPPORTS	
Removal and Installation	03-01	Removal and Installation	03-01
		GENERAL INFORMATION	03-01

GENERAL INFORMATION

This part provides information for in-chassis service of Ford Diesel Trucks equipped with naturally aspirated Cummins Diesel engines. For service procedures on the turbo-charged NTC-335 and NTC-270-CT and -E custom torque Series Cummins engines, refer to the Cummins Engine Shop Manual.

Overhaul procedures, test stand procedures, specifications, and wear limits are covered in the Cummins engine Shop Manuals.

The four-stroke-cycle, Cummins Diesel engines have a compression ratio of 15.5:1. Overhead valves are push tube actuated by cam followers operated off the camshaft.

The PT (pressure-time) fuel pump is driven by the air compressor at engine speed. The engine speed governor is incorporated in the fuel pump. The tachometer is coupled to the fuel pump main shaft.

REMOVAL AND INSTALLATION

ENGINE SUPPORTS—L, LT, LTS, LN, LNT AND W-SERIES

ENGINE FRONT SUPPORT INSULATOR

Removal

1. On W-Series trucks, release the cab locks and tilt the cab forward.
2. Loosen the two engine support clamp bolts (Figs. 1 and 2).
3. Remove the two upper insulator attaching bolts.
4. Remove the two lower insulator attaching bolts and remove the insulator.
5. Place a wood block on a jack, then raise the engine high enough to remove the upper insulator and spacers.

Installation

1. Torque the engine support bracket-to-crossmember attaching bolts to specification.
2. Position a new upper insulator on the support bracket (Figs. 1 and 2).
3. Lower the engine enough to start the attaching bolts and washers in the spacers, then remove the jack.
4. Secure the lower insulator to the support bracket with the attaching bolts and washers. Torque the four insulator attaching bolts to specification.
5. Torque the two support clamp bolts to specification. **If the engine rear mounts were removed, do not torque the cap bolts until the engine rear supports are installed.**
6. On W-Series trucks, return the cab to its normal position and secure it with cab locks.

ENGINE REAR SUPPORT INSULATOR

Removal

1. On W-Series trucks, release the cab locks and tilt the cab forward.
2. Loosen the two engine front support clamp bolts (Figs. 1 and 2).
3. Remove the two capscrews from the engine rear support bracket and remove the cap.
4. Place a wood block on a jack and raise the rear of the engine just enough to remove the weight from the rear supports.
5. Remove the four bolts that attach the engine rear support to the frame side rail and remove the support and insulator.

Installation

1. Position a new insulator on the engine rear support (Figs. 1 and 2). Position the support and insulator to the frame side rail, install and torque the attaching bolts to specification.
2. Lower the engine and remove the jack.
3. Install and torque the cap screws in each engine rear support bracket and cap.
4. Torque the two engine front support clamp bolts to specification.
5. On W-Series trucks, return the cab to its normal position and secure it with the cab locks.

ENGINE

LN-SERIES

Removal

1. Remove the vehicle cab and engine hood assembly, following the procedures under Cab Removal.
2. Drain the engine crankcase and oil filters.
3. Disconnect the radiator upper and lower hoses at the engine. Disconnect the radiator shutter air line at the radiator. Remove the cooling fan and spacer.
4. Remove the radiator brace attaching

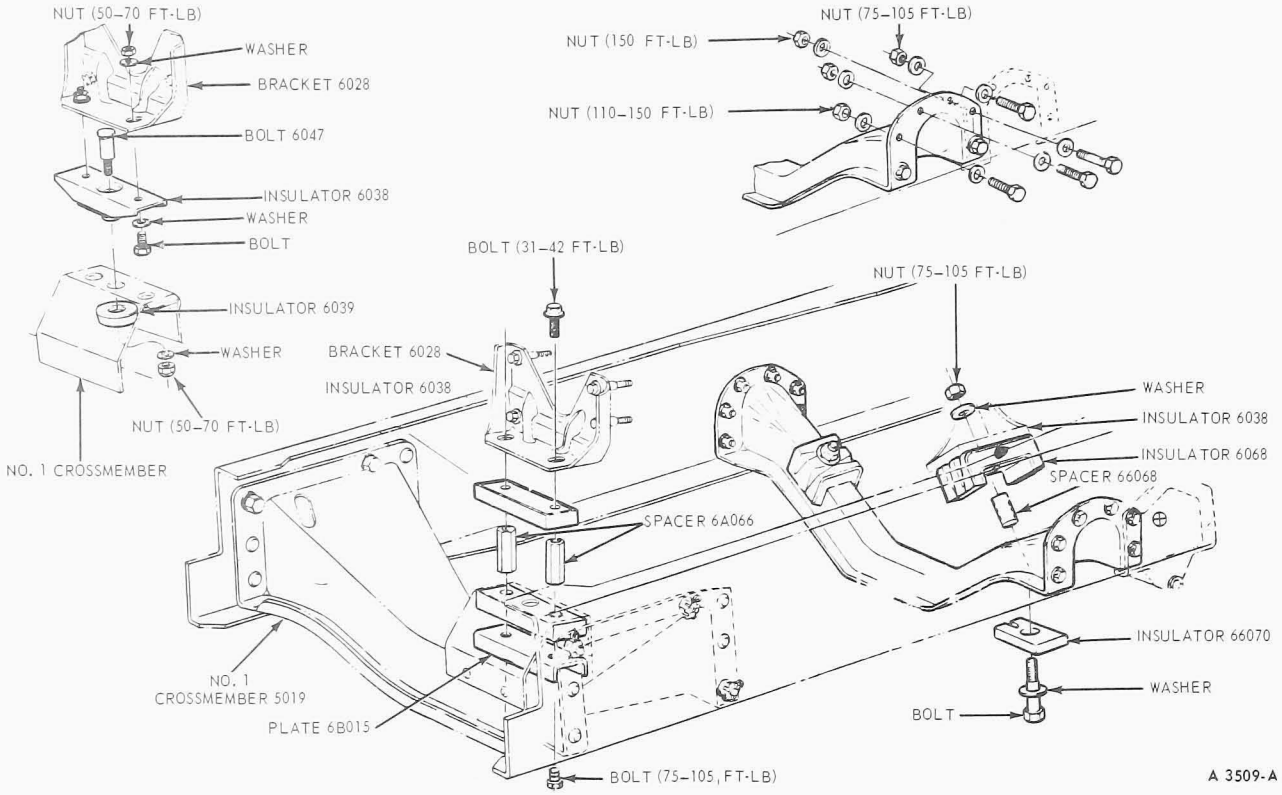

FIG. 1 Cummins Engine Supports L, LT, LN, LNT Series

nuts, washers and insulators at the radiator brackets. Remove the cooling fan and spacer. Remove the radiator support to frame mounting nuts, washers, insulator and springs. Use a hoist to lift the radiator, radiator support and shutter assembly off the vehicle.

5. Disconnect the oil filter lines from the Luber-Finer oil filter to the engine at the engine oil cooler and at the engine.
6. Loosen the power steering pump adjustment bolts, and disengage the drive belts. Remove the power steering pump to bracket mounting bolts, and position the pump out of the way on the left fender apron.
7. Disconnect the air reservoir supply line at the air compressor.
8. Remove the alternator wiring harness from the frame clips, and position it on the engine.
9. Disconnect the muffler inlet pipe from the exhaust manifold.
10. Disconnect the fuel return line from the rear cylinder head. Disconnect the fuel injection pump supply line at the fuel filter.
11. Disconnect the starter cables and identify them for proper connection.
12. Remove the clutch return spring and slave cylinder from the flywheel housing.
13. Remove the transmission.
14. Install the engine lifting brackets. Attach a hoist and the engine lifting fixture (Cummins ST-125) to the engine lifting brackets.
15. Remove the engine front support bracket cap (Figs. 1 and 2). Remove the engine rear support bolts, nuts and lower insulators. Carefully lift the engine out of the vehicle. Install the engine on a work stand or skid.

Installation

1. Check the crankshaft end clearance to be sure it is within specification. Then, install the engine lifting brackets, and attach a lifting fixture (Cummins ST-125) and hoist to the brackets. Remove the engine from the work stand or skid. Carefully position the engine in the vehicle and set it on the front support bracket and rear support insulators.
2. Install the engine rear supports. Install the engine front supports. Remove the hoist and lifting sling. Torque the engine front support bolts and the rear support nuts to specifications.
3. Remove the engine lifting brackets.
4. Install the transmission.
5. Install the clutch return spring and slave cylinder on the flywheel housing. Adjust the slave cylinder linkage.
6. Connect the starter cables to the same starter terminals from which they were removed.
7. Place a new gasket between the flanges of the muffler inlet pipe and exhaust manifold. Install the attaching bolts and nuts.
8. Connect the fuel injection pump supply line at the fuel filter. Connect the fuel return line to the rear cylinder head.
9. Place the alternator wiring harness in the frame clips.
10. Connect the air reservoir supply line to the air compressor.
11. Position the power steering pump on the pump bracket, and install the mounting bolts. Position the drive belts on the pulleys. Adjust the belt deflection to specifications.
12. Connect the oil filter lines at the oil cooler and at the engine.
13. Position the radiator support to frame insulator on the frame front crossmember. Use a hoist to lift the radiator, radiator support and shutter assembly onto the vehicle. Position the assembly on the radiator support insulator, and install the springs, washers and attaching nuts. Connect the radiator braces to the radiator support, and install the insulators and attaching nuts. Tighten the radiator brace and support nuts.
14. Use a new gasket and install the cooling fan and spacer. Check and adjust the cooling fan to fan shroud clearance; it should be uniform at 4 equidistant points.

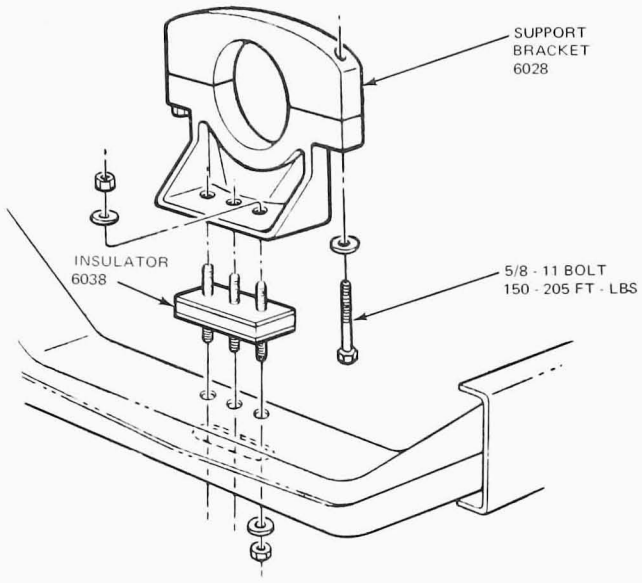

FRONT SUPPORT
NTC-270-E, NTC-335 N-927

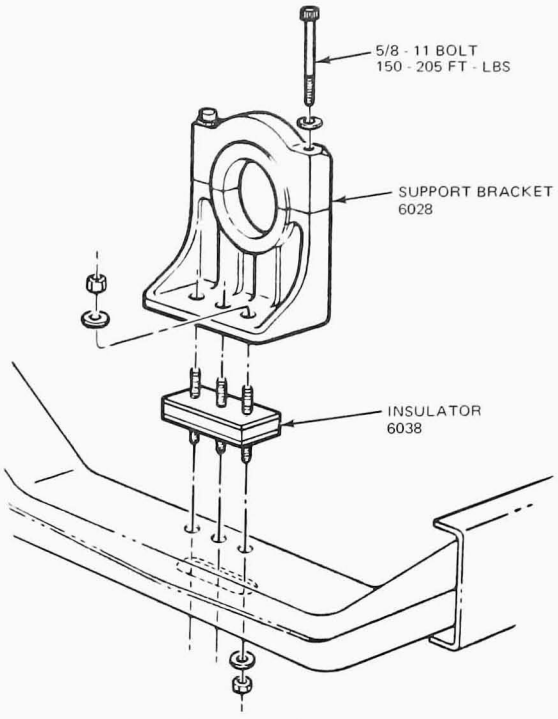

FRONT SUPPORT
VIEW FOR NHC-250, NH-230

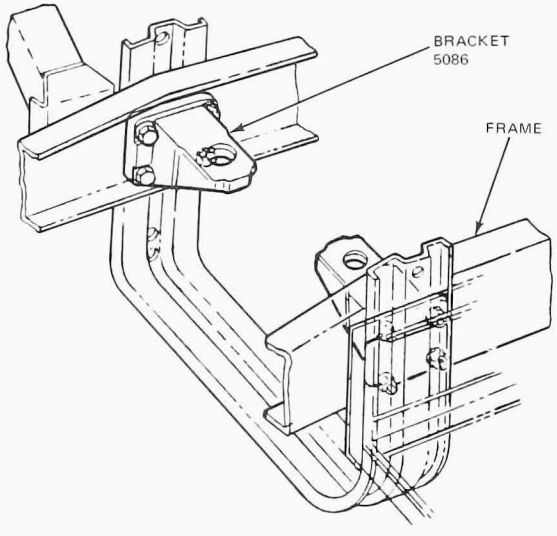

REAR SUPPORT

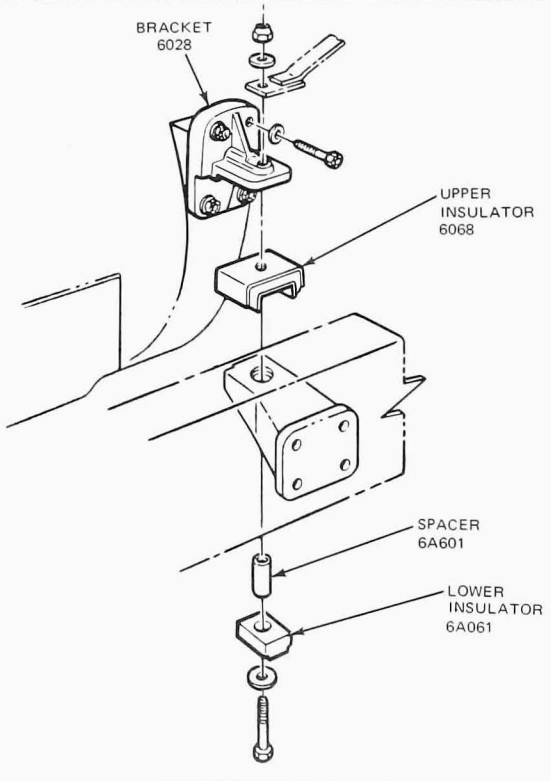

REAR SUPPORT INSULATOR
INSTALLATION (ALL ENGINES)

A3518-A

FIG. 2 Cummins Engine Supports—W-Series

15. Connect the radiator upper and lower hoses at the engine. Connect the radiator shutter air line at the radiator.
16. Install the truck cab and engine hood assembly, following the procedures under Cab Installation.
17. Fill the engine crankcase with the recommended lubricating oil. Fill and bleed the cooling system with the recommended coolant.
18. Start the engine and check for coolant, oil and fuel leaks. After operating the engine for a few minutes, stop it, and check the crankcase oil level. Add oil, as necessary, to bring the level up to the proper mark on the dipstick.

W-SERIES

The engine installation is shown in Figs. 3 and 4.

Removal

1. Release the cab locks and tilt the cab forward.
2. Drain the cooling system and the crankcase.
3. Disconnect the battery cables.
4. Remove the bolts and clamps and remove the air tubes from the air cleaner to the air manifold.
5. Disconnect the overflow and the by-pass hoses at the radiator.
6. Disconnect the upper and the lower radiator hoses at the engine.
7. Remove the fan assembly and spacer from the water pump.
8. Attach chain fall or crane, remove the attaching bolts and remove the radiator and shroud assembly.
9. Remove the power steering pump and bracket assembly and position it to one side.
10. Disconnect the heater hoses from the engine.
11. Remove the alternator and position it to one side.
12. Disconnect the ground wires from the cylinder block.
13. Disconnect the muffler inlet pipe from the exhaust manifold and discard the gasket.
14. Disconnect the throttle linkage from the fuel pump.
15. Remove button and bezel of the air starter control and position it to one side, if so equipped.
16. Disconnect the quick start cable from the fluid container.
17. Remove the shift lever knob and the two speed axle selector switch, and remove the tray from the shift lever support.
18. Disconnect the lead from the fuel shut down solenoid, and remove and position the wiring harness out of the way.
19. Disconnect the fuel line from the fuel filter.
20. Disconnect the fuel return line at the rear of the cylinder head.
21. Disconnect the starter air line at the tank, if equipped with air starter.
22. Disconnect and remove the temperature sending unit at the water manifold and the retainer at the cylinder block.
23. Remove the retaining clips and remove the oil temperature and the air pressure lines from the air compressor.
24. Remove the retainer and the air line and the air starter control lines at

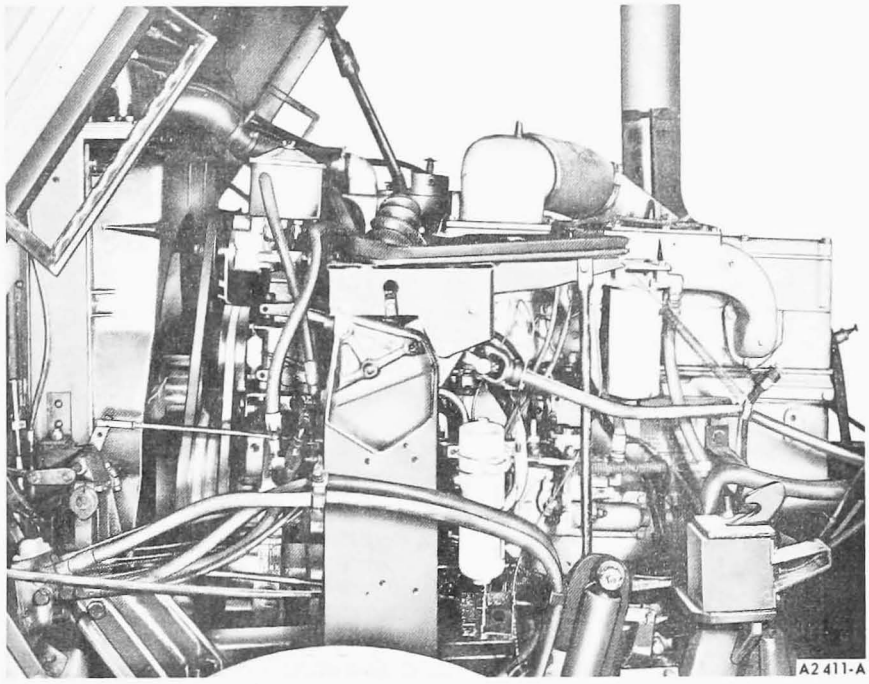

FIG. 3 W-Series Installation—Left View

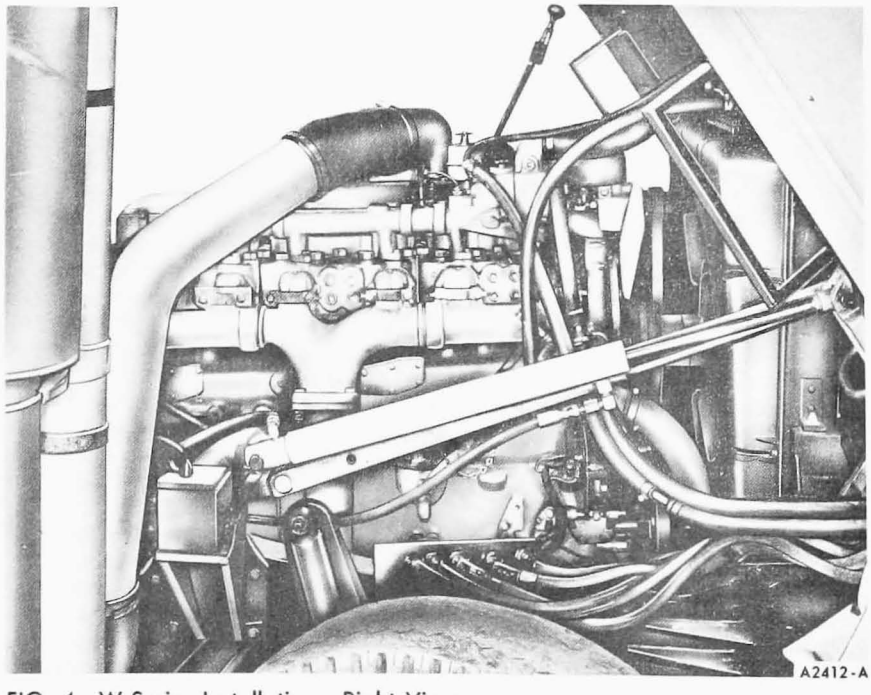

FIG. 4 W-Series Installation—Right View

the cylinder block, if so equipped.
25. Disconnect the oil pressure gauge line at the cylinder block.
26. Remove the oil temperature sending unit from the crankcase.
27. Disconnect the oil line (connected to the oil filter) at the crankcase.
28. Disconnect the oil line that connects the chassis mounted oil filter to the engine mounted oil filter, at the engine mounted oil filter.
29. Disconnect the tachometer cable at the fuel pump.
30. Disconnect the quick start line at the manifold.
31. Remove the air horn from the air manifold.
32. Disconnect the clutch linkage rods at the rear equalizer arm, remove the equalizer arm mounts and remove the equalizer arm.
33. Remove the nuts and bolts that attach the front engine support to the number one crossmember.
34. Remove the cap from the engine front support.
35. Support and raise the transmission slightly while attaching chain fall and taking up slack.
36. Remove transmission to clutch housing bolts.
37. Remove engine rear support nuts.
38. Some installations may require removing the left chassis support frame side rail. If so remove the bolts and slide it past the starter and lift it out.
39. Carefully lift engine, easing it forward, lifting out engine front support as this is done. Remove engine from the chassis.

Installation

1. Remove the inspection cover from the bottom of the transmission clutch housing.
2. Carefully ease the engine down to the chassis and to the transmission aligning the throw out bearing fork with the throw out bearing. Position the engine front support and install the bolts and nuts and torque to specifications.
3. Install the transmission to clutch housing bolts and torque to specifications.
4. If it was removed, install the left hand chassis support frame side rail.
5. Install the rear engine support nuts, and install the inspection cover to the bottom of the transmission clutch housing.
6. Install the cap to the front engine support.
7. Install the equalizer arm mounts and the equalizer arm, and connect the clutch linkage rods.
8. Install the air horn on the air manifold.
9. Connect the quick start line at the manifold.
10. Connect the tachometer cable at the fuel pump.
11. Connect the oil line to the engine mounted air filter.
12. Connect the oil filter line at the crankcase.
13. Install the oil temperature sending unit on the crankcase.
14. Connect the oil pressure gauge line at the cylinder block.
15. If so equipped, position the air line and the air starter control lines at the cylinder block and install the retainer and the attaching bolt.
16. Position the oil temperature and air pressure lines and install the retaining clip on the air compressor.
17. Connect the temperature sending unit at the water manifold and the retainer at the cylinder block.
18. If equipped with an air starter, connect the air line at the tank.
19. Connect the fuel return line at the rear of the cylinder head.
20. Connect the fuel line to the fuel filter.
21. Position the wiring harness, and connect the lead to fuel shut down solenoid on the fuel pump.
22. Install the tray on the shift lever support, the two speed axle selector switch, and the shift lever knob.
23. Connect the quick start cable to the fluid container.
24. If so equipped, install the button and bezel of the air starter control.
25. Connect the throttle linkage at the fuel pump.
26. Position the gasket and connect the muffler inlet pipe to the exhaust manifold.
27. Connect the ground wires to the cylinder block.
28. Install the alternator.
29. Connect the heater hoses.
30. Position the power steering pump and bracket assembly and install the attaching bolts.
31. Ease the radiator and shroud assembly down into position and install the attaching bolts.
32. Install the spacer and the fan assembly on the water pump.
33. Connect the upper and lower radiator hoses.
34. Connect the overflow and the by-pass hoses at the radiator.
35. Position the air tubes from the air cleaner to the intake manifold and install the clamps and the bolts.
36. Connect the battery cables.
37. Fill the crankcase with the proper grade and quantity of engine oil. Fill and bleed the cooling system.
38. Lower and lock the cab.
39. Operate the engine and check for fuel, oil, and coolant leaks.

SPECIFICATIONS

CUMMINS DIESEL ENGINE

FOR ADDITIONAL SPECIFICATIONS REFER TO THE APPROPRIATE CUMMINS SHOP MANUAL

Engine Model	Piston Displacement	Bore and Stroke	Engine Oil Capacity		
			U.S. (Qts.)		Imperial (Qts.)
NH-230	855 CID	5.50 x 6.00	L Series	42	35
			W Series	47	39
NHC-250	855 CID	5.50 x 6.00	L Series	43	36
			W Series	47	39
NTC-335	855 CID	5.50 x 6.00	L Series	46	38¼
			W Series	48	40
NTC-270-E	855 CID	5.50 x 6.00	L Series	46	38¼
			W Series	48	40
NTC-270-CT	855 CID	5.50 x 6.00	L Series	46	38¼
			W Series	48	40
N-927	927 CID	5.50 x 6.50	L Series	46	38¼
			W Series	48	40

1 Add 12 U.S. quarts (10-1/4 Imperial qts) when equipped with optional by-pass filter.

CA1294-A

PART 22-04 Detroit Diesel Engines

Applies To L-, LN-, LNT-, LT-, W-, WT-9000

COMPONENT INDEX	Page
ENGINE	
Description	04-01
Installation	04-06
Removal	04-05
ENGINE SUPPORTS	
Front Support Insulators	
Installation	04-01
ENGINE SUPPORTS - Continued	
Removal	04-01
Rear Support Insulators	
Installation	04-01
Removal	04-01
SPECIFICATIONS	04-06

All adjustment, removal, installation, and repair operations will be performed by authorized Detroit Diesel Engine Dealers and Ford Truck Dealers who are authorized to repair Detroit Diesel Engines.

Service operations on Ford-warranted parts attaching to the Detroit Diesel engines are the responsibility of Ford truck dealers, and procedures for these operations are included in this part.

DESCRIPTION

The 8V-71N and 6-71N Detroit Diesel Engines are a 2-stroke cycle having a 4 1/4 inch bore and a 5 inch stroke. The total piston displacement is 567.5 CID for the 8V-71N and 426 CID for the 6-71N. The compression ratio is 18.7:1 for both engines. The 6V-53N has 3.87 inch bore and a 4 1/2 inch stroke. The total piston displacement is 318.4.

The patent plate identification symbols for the engines are shown in the engine application chart.

ADJUSTMENTS

When installing nuts or bolts (refer to the end of this Group for torque specifications), oil the threads with light weight engine oil. **Do not oil threads that require oil-resistant or water-resistant sealer.**

ENGINE SUPPORTS

FRONT SUPPORT INSULATORS

Removal

1. On W-Series trucks, release the cab locks and tilt the cab forward.
2. Loosen the two engine support clamp bolts (Figs. 2 and 3).
3. Remove the two upper insulator attaching bolts (Fig. 1).
4. Remove the two lower insulator attaching bolts (Fig. 1) or through bolts (Figs. 2 and 3) and remove the plate and insulator.
5. Place a wood block on a jack, then raise the engine high enough to remove the upper insulator and spacers.

Installation

1. Torque the engine insulator bracket-to-crossmember attaching bolts to specification.
2. Position a new upper insulator on the insulator bracket (Figs. 1, 2 and 3).
3. Lower the engine enough to start the attaching bolts and washers in the spacers (Fig. 1) then remove the jack.
4. Secure the lower insulator to the insulator bracket with the plate and (Figs. 1, 2 and 3) attaching bolts and washers or through bolts. Torque the insulator attaching bolts to specification. Secure the through bolts with cotter pins.
5. Torque the two support clamp bolts (Fig. 2) to specification. **If the engine rear mounts were removed, do not torque the cap bolts until the engine rear supports are installed.**
6. On W-Series trucks, return the cab to its normal position and secure it with the cab locks.

REAR SUPPORT INSULATORS

Removal

1. On W-Series trucks, release the cab locks and tilt the cab forward.
2. Loosen the two engine front support clamp bolts (Fig. 2 working on a vehicle equipped with a 6-71N or 8V-71N engine).
3. Remove the two capscrews from the engine rear support bracket and remove the cap.
4. Place a wood block on a jack and raise the rear of the engine just enough to remove the weight from the rear supports.
5. Remove the bolts that attach the engine rear support to the frame side rail and remove the support and insulator.

Installation

1. Position a new insulator on the engine rear support (Figs. 1, 2 and 3). Position the support and insulator to the frame side rail.

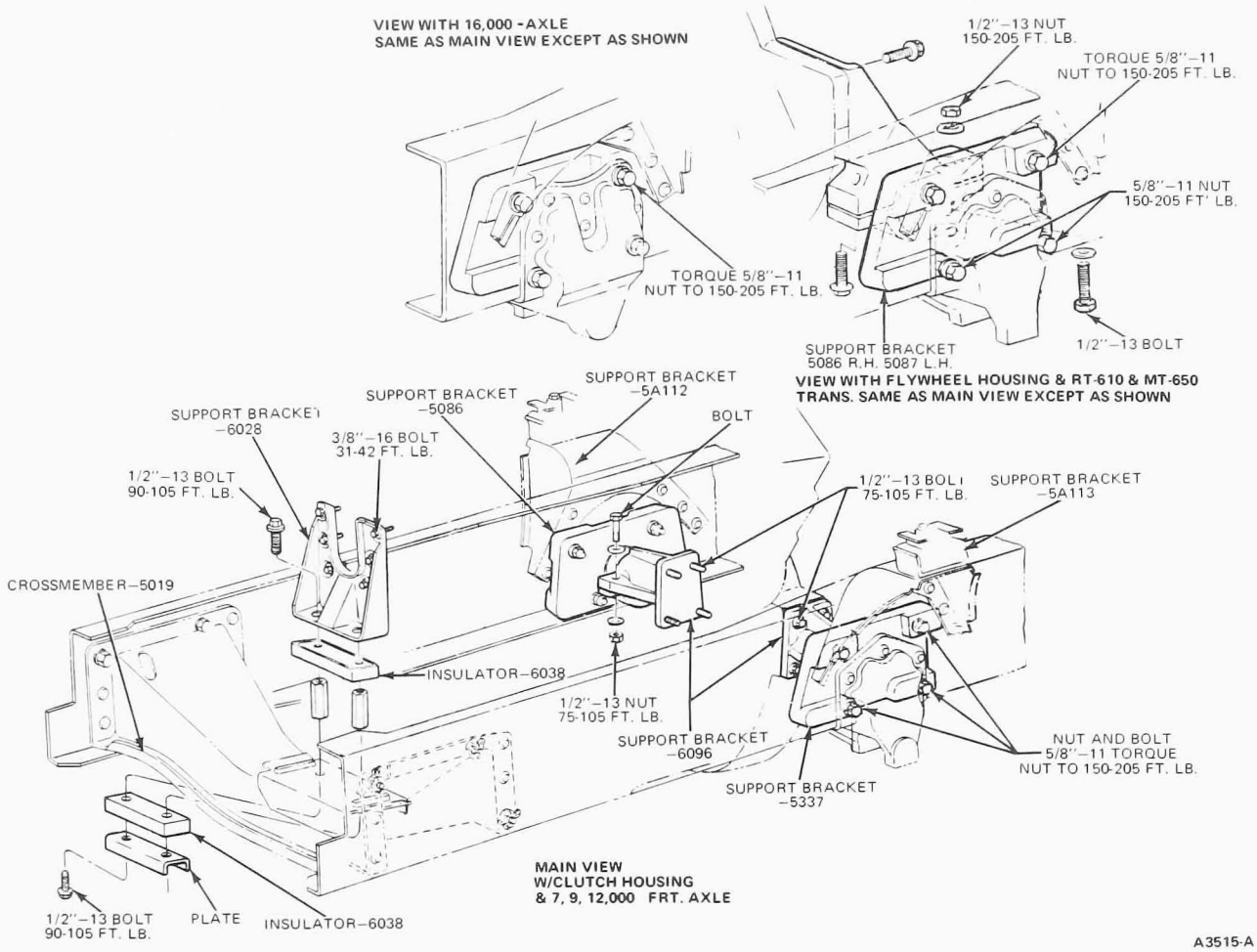

FIG. 1 Engine Supports—6V-53N Engine

Install and torque the attaching bolts to specification.

2. Lower the engine and remove the jack.
3. Install and torque the capscrews in each engine rear support bracket and cap.
4. Torque the two engine front support clamp bolts (Figs. 2 and 3) to specification if they were loosened.
5. On W-Series trucks, return the cab to its normal position and secure it with the cab locks.

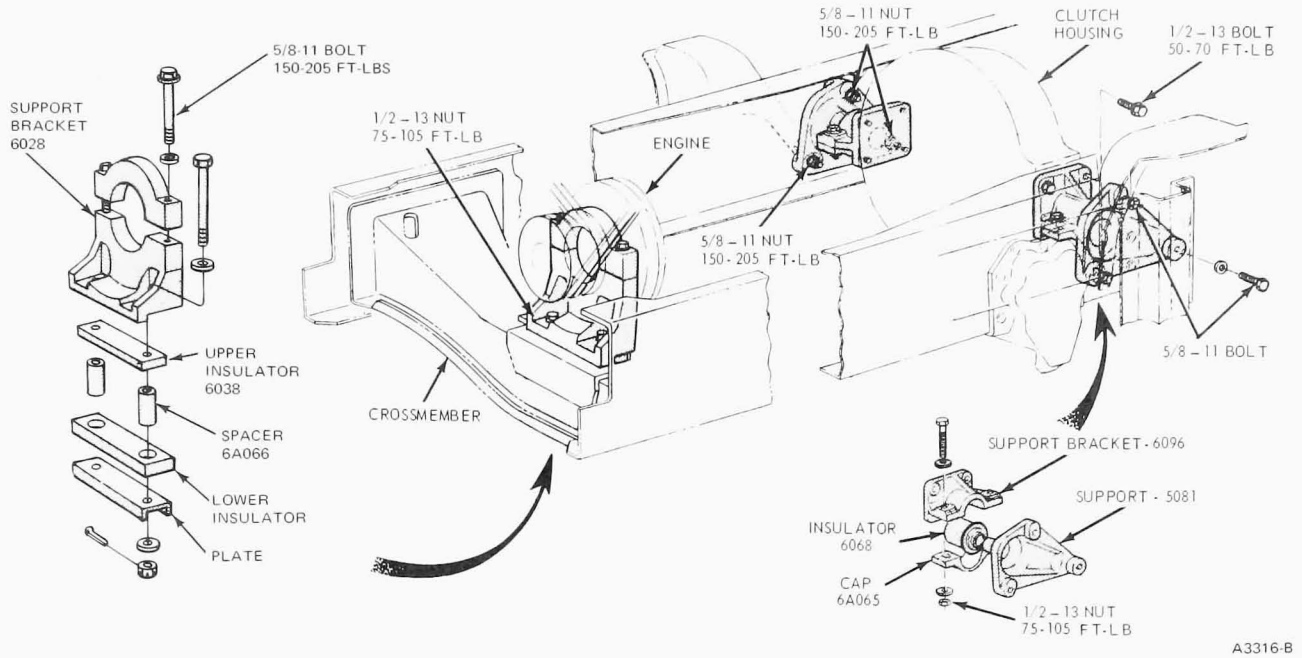

FIG. 2 Engine Support—6-71N Engine

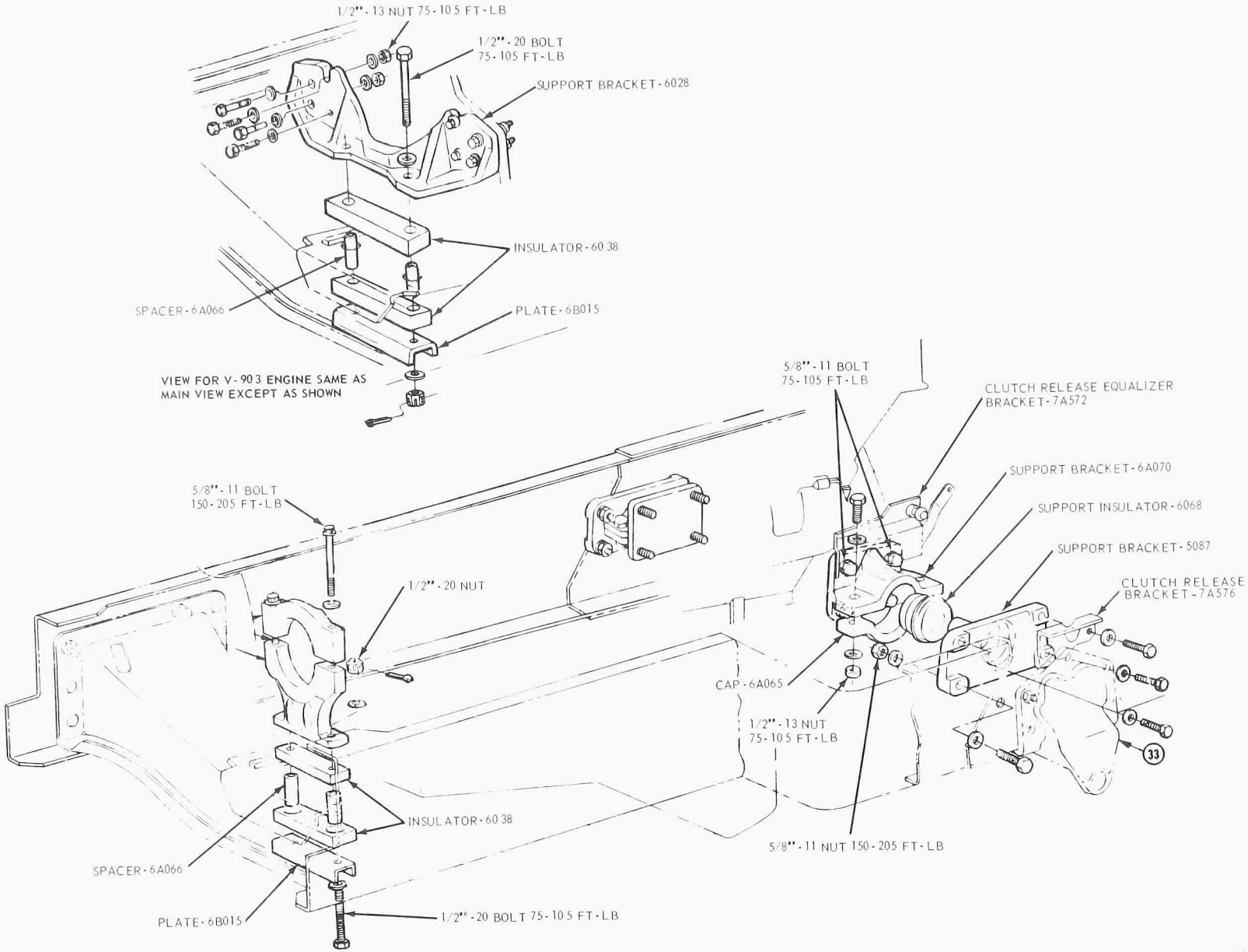

FIG. 3 Engine Supports 8V-71N and V903 Engines

REMOVAL AND INSTALLATION

The 6-V 53N engine installation is shown in Fig. 5. The following engine removal and installation procedure is basic and applies to the 8V-71N, 6-71N and the 6-V 53N engines.

The 8V-71N engine installation is shown in Fig. 4.

ENGINE ASSEMBLY

Removal

1. Release the cab locks and tilt the cab all the way forward if working on a W-Series truck. If working on an L-Series truck, disconnect the hood check cables and springs, then support the hood and fenders in a vertical position.
2. Drain the cooling system and the crankcase. Disconnect the battery cables from the batteries.
3. Disconnect the radiator hoses and automatic shutter air line. Remove the radiator attaching bolts and remove the radiator and shroud as an assembly.
4. Disconnect the oil filter (Luber-Finer) oil lines at the engine.
5. Loosen the hose clamps and remove the inlet air tube and hoses from the air shut-down housing and air cleaner outlet duct.
6. Disconnect the fuel return line from the fuel return manifold. Disconnect the fuel supply line at the fuel strainer. Remove the lines and attaching clips from the engine.
7. Disconnect the air compressor air lines at the compressor.
8. Disconnect the alternator leads and identify them for connection to the proper terminals. Disconnect the leads from the oil pressure and temperature sending units and coolant temperature sending unit. Remove the engine wiring harness from the clips and position it out of the way.
9. Disconnect the fuel shut-off valve lead. Disconnect the tachometer cable. Disconnect the engine stop cable from the air shut-down housing air valve.
10. Disconnect the muffler inlet pipes at the exhaust manifolds and inlet pipe adapters. Remove the inlet pipes.
11. Remove the power steering pump adjusting and mounting bolts and position the pump out of the way. Disconnect the accelerator linkage.
12. Disconnect the heater hoses.
13. Disconnect the starter cables.
14. Disconnect the engine rear supports. Disconnect the engine front support.

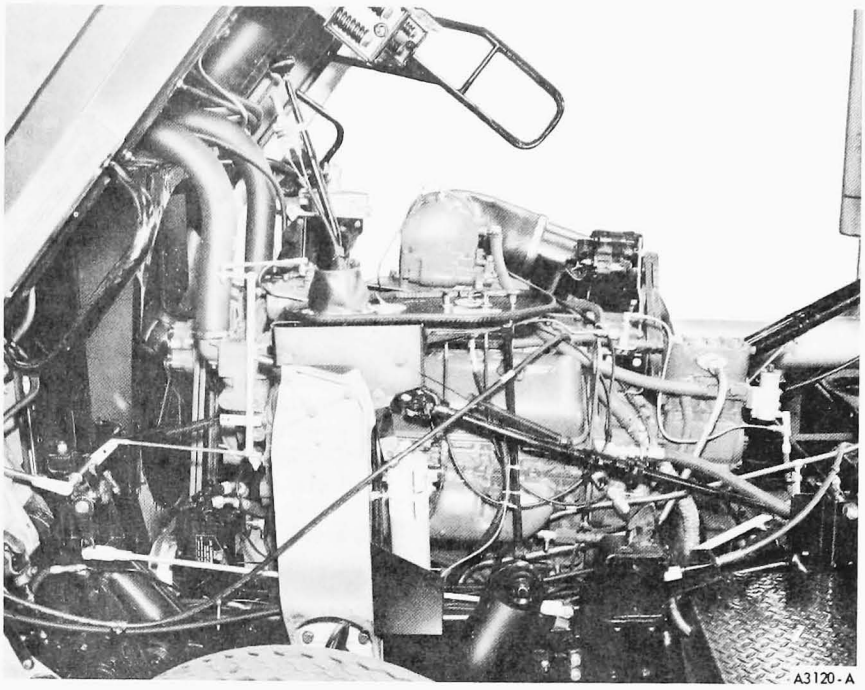

FIG. 4 8V-71N Engine Installed in W-Series Vehicle

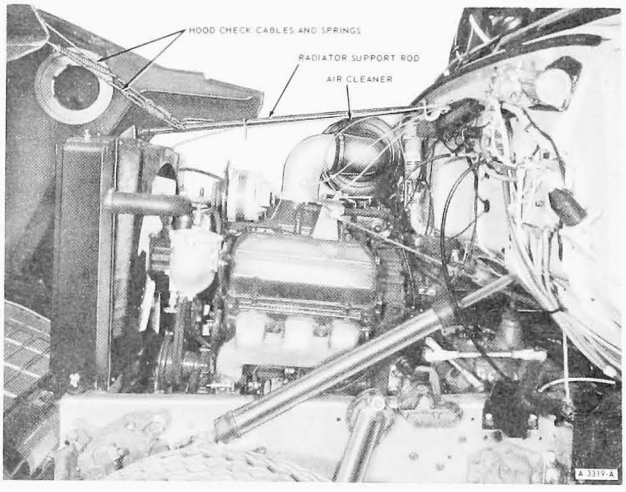

FIG. 5 6-V 53N Engine Installed in L-Series Vehicle

15. Support the transmission with a jack. Disconnect the clutch linkage (slave cylinder) as necessary. Remove the transmission to engine flywheel housing bolts.
16. Use a hoist and lifting sling (use a spreader bar type) to raise the engine. Separate the engine from the transmission. Carefully remove the engine and install it on a work stand or skid. Remove the hoist and lifting sling.

Installation

1. Attach a hoist and lifting fixture to the engine lifting brackets. Remove the engine from the skid or work stand.
2. Carefully lower the engine into the chassis. Make sure the exhaust manifolds are properly aligned with the muffler inlet pipes, and that the clutch disc is properly centered on the transmission input shaft (Fgroup 16), then slide the engine back onto the transmission. Install the transmission attaching bolts.
3. Install the front and the rear supports.
4. Connect the starter cable.
5. Connect the heater hoses.
6. Install the muffler inlet pipe(s) using new gasket(s) at the exhaust manifold(s). Tighten the nuts and clamp(s) to specifications.
7. Connect the accelerator linkage. Install the power steering pump on the engine. Adjust the belt tension to specifications.
8. Connect the hand throttle control. Attach the tachometer cable. Connect the fuel shut-off valve lead. Connect the engine stop cable to the air shut-down housing air valve.
9. Position the engine wiring harness on the engine and secure it with the harness clips. Connect the oil pressure and temperature sending unit leads. Connect the coolant temperature sending unit wire. Connect the alternator leads to the proper alternator terminals.
10. Install the compressor air lines.
11. Position the fuel lines on the engine and install the attaching clips. Connect the fuel supply line to the fuel strainer. Connect the fuel return line to the fuel return manifold.
12. Install the inlet air tube and hoses to the air shut-down housing and air cleaner outlet duct. Tighten the hose clamps.
13. Connect the oil filter (Luber-Finer) oil lines to the engine.
14. Install the radiator and shutter assembly. Connect the radiator hoses and shutter air hose.
15. Connect the battery cables to the batteries. Fill and bleed the cooling system. Fill the crankcase.
16. Lower the cab and lock it in position if working on a W-Series truck. If working on an L-Series truck, install the radiator support bar and connect the hood check cables and springs.
17. Operate the engine and check for fuel, oil, air and coolant leaks. Check the crankcase oil level and add oil as necessary.
18. Adjust the clutch free-travel.
19. Adjust the accelerator linkage as required.

SPECIFICATIONS

DETROIT DIESEL ENGINE SPECIFICATIONS
FOR ADDITIONAL SPECIFICATIONS, REFER TO THE APPROPRIATE DETROIT DIESEL SHOP MANUAL

Item	Engine	Specifications
Engine Type	6-71 Series	In-Line Six
	6V-53N	V-6
	8V-71 Series	V-8
Bore and Stroke	8-V71, 6-71 6-V53 6-V53	4.25 x 5.00 3.87 x 4.50 21:1
Compression Ratio	8-V71, 6-71	18.7:1
Displacement (cubic inch)	6-71 Series	426
	8V-71 Series	568
	6V-53 Series	318.4

Item	Engine	Specifications
Engine Oil Capacity (Gal)	6-71 Series	7.0
		10 1/4 ①
	8-V-71 Series	6 1/4
		9 1/2 ①
	6-V 53	4
		7 1/4 ①

① With Bypass Filter.

CA1292-A

PART 22-05 Ford V-8 Diesel Engines

Applies To B-, C-, F-, L-, LN-, LNT-, LT, LTS-Series

COMPONENT INDEX	Page	COMPONENT INDEX	Page
ENGINE		ENGINE SUPPORTS - Continued	
Description	05-01	Removal	05-01
Installation	05-05	Rear Support Insulators	
Removal	05-05	Installation	05-01
ENGINE SUPPORTS		Removal	05-01
Front Support Insulators			
Installation	05-01	SPECIFICATIONS	05-05

DESCRIPTION

The Ford V-8 Diesel Engines are direct injection, 4-stroke cycle, 90 degree V-8's. All use the same basic head and block, but vary rpm, stroke and fuel injector settings to produce four different horsepower ratings. The oil pan and flywheel configurations depend upon engine application. The cylinders are numbered from the front with the odd numbers, 1, 3, 5 and 7 located in the right bank (as viewed from the flywheel). The firing order is 1-2-7-3-4-5-6-8.

The engines are of the overhead valve design and have one intake and one exhaust valve per cylinder. The camshaft, geared and timed to the crankshaft, actuates rocker arms and valves through mechanical lifters and push rods. There is a single rocker arm shaft for each head. The shaft is mounted in an aluminum support which spaces the rocker arms. The entire guide, shaft and arm assembly is removed and installed as a unit.

The crankshaft pulley and vibration damper are integral units on the 1150 and 1160 Engines. The 1140 and 1145 Engines do not use a vibration damper.

ADJUSTMENTS

When installing nuts or bolts (refer to the end of this Part for torque specifications), oil the threads with light weight engine oil. **Do not oil threads that require oil-resistant or water-resistant sealer.**

ENGINE SUPPORTS

FRONT SUPPORT INSULATORS

Removal—F-B 6000-7000 and L, LN, LNT, LT, LTS-8000

1. Remove the two engine front support-to-upper insulator attaching bolts (Figs. 1 and 2).
2. Remove the two lower insulator attaching bolts and remove the insulator and spacers.
3. Place a wood block on a jack, then raise the engine high enough to remove the upper insulator.

Removal—C-6000-7000-8000

1. Remove the two lower attaching nuts (Fig. 3).
2. Using a wood block and jack, raise the engine for wrench clearance and remove the two bolts and nuts attaching the insulator to the engine support. Remove the insulator (Fig. 3).

Installation—F-B-6000-7000 and L, LNT, LTS-8000

1. Position a new upper insulator on the support bracket (Figs. 1 and 2).
2. Lower the engine enough to start the attaching bolts and washers in the spacers, then remove the jack.
3. Secure the lower insulator to the support bracket with the attaching bolts and washers. Torque the four insulator attaching bolts to specification.

Installation—C-6000-7000-8000

1. Position the insulator on the engine support and install the upper attaching bolts and nuts.
2. Lower the engine and install the lower attaching nuts and washers. Torque all attaching bolts and nuts to specifications.

REAR SUPPORT INSULATORS

Removal—F and B-6000-7000 and C-Series

1. Remove the bolts from the engine rear supports (Figs. 1 and 3).
2. With a hoist or jack and block of wood, raise the engine by lifting the transmission. Raise the engine only enough for clearance to remove the insulators and spacers.

Installation—F and B-6000-7000 Series

1. Position the engine rear support insulators and spacers on the crossmember (Figs. 1 and 3).
2. Lower the engine until engine support brackets almost touch the insulators. Install the support bolts and lock washers.
3. Lower the engine and remove the hoist or jack.
4. Tighten all bolts to specifications. Bend tabs on lock washers.

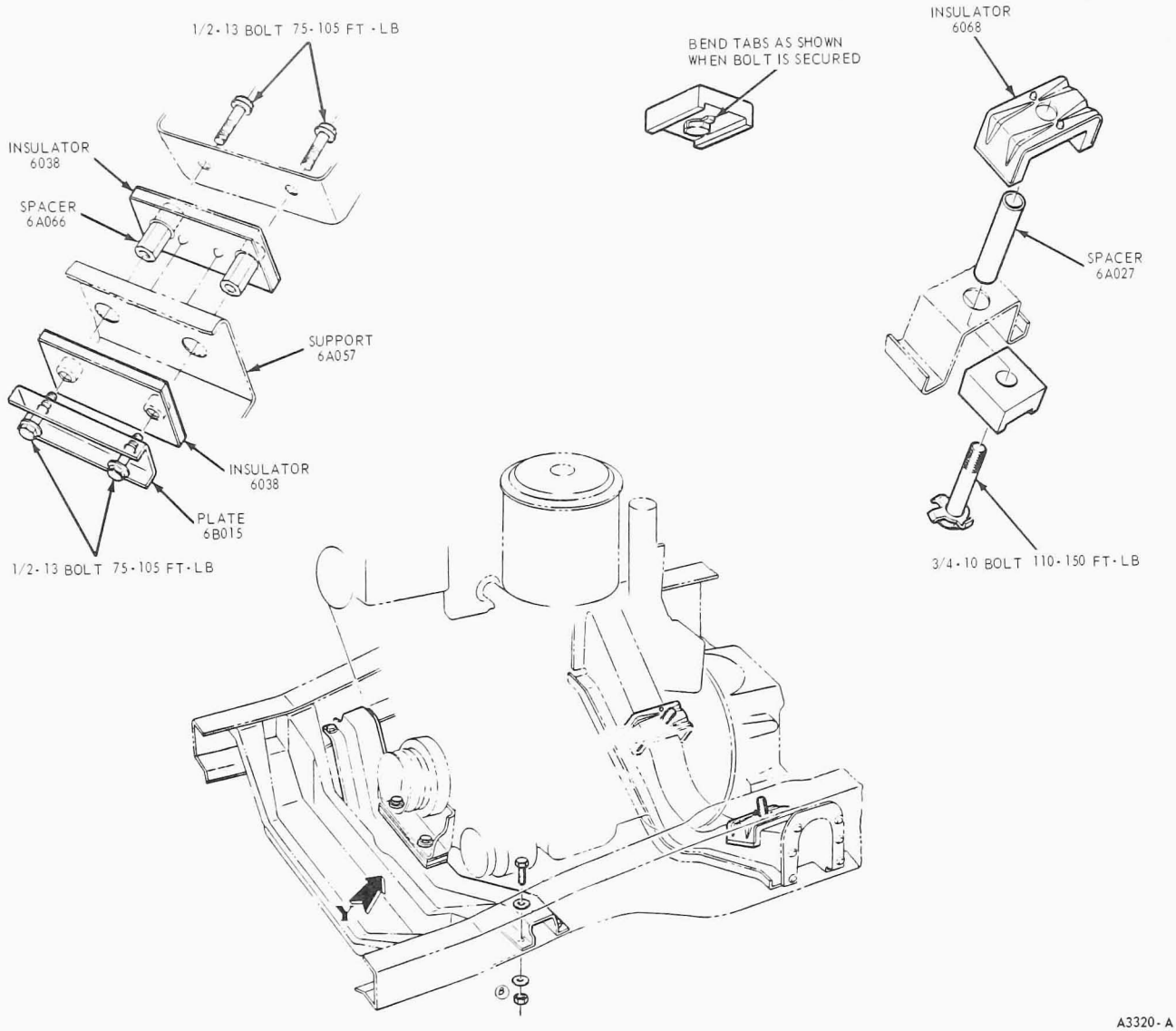

FIG. 1 Ford V-8 Engine Supports F and B-6000-7000 Series

Removal—L, LN, LNT, LT, LTS-8000 Series

1. Remove the two bolts from the engine rear support brackets and remove the caps.
2. Place a wood block on a jack and raise the rear of the engine just enough to remove the tubular insulators from the rear supports.

Installation—L, LN, LNT, LT, LTS-8000 Series

1. Position new insulators on the engine rear supports (Fig. 2).
2. Lower the engine and remove the jack.
3. Install and torque the bolts in each engine rear support bracket and cap.

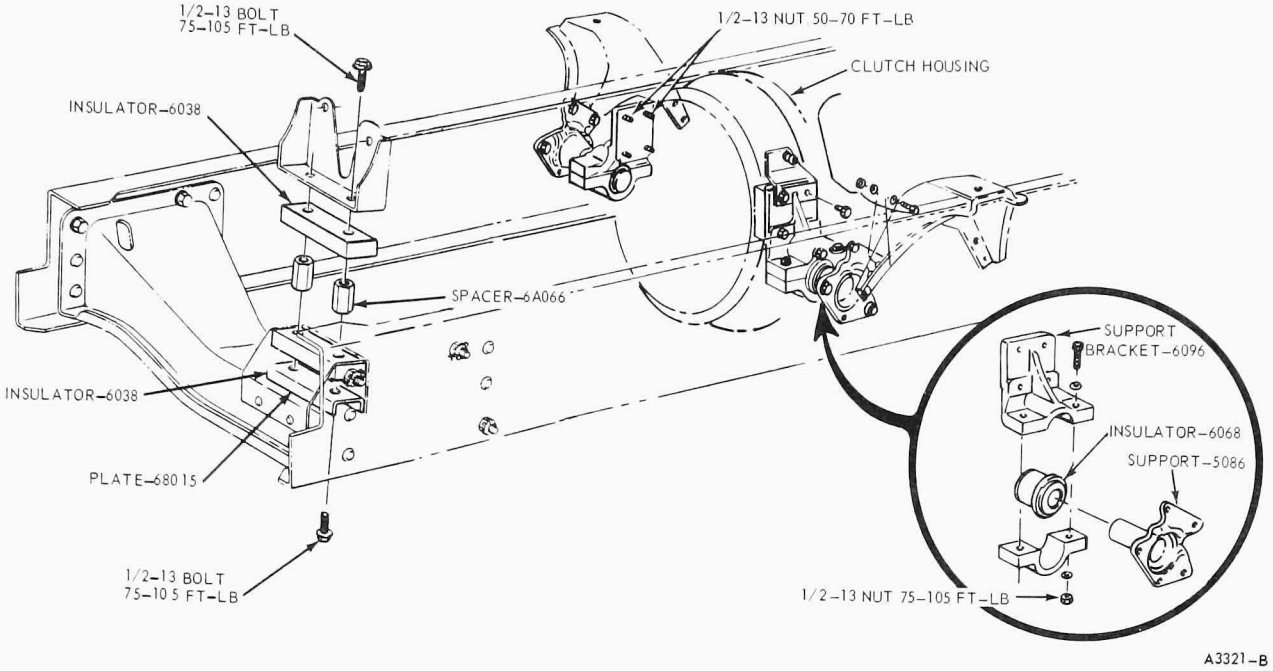

FIG. 2 Ford V-8 Engine Supports—L, LN, LNT, LT, LTS-8000

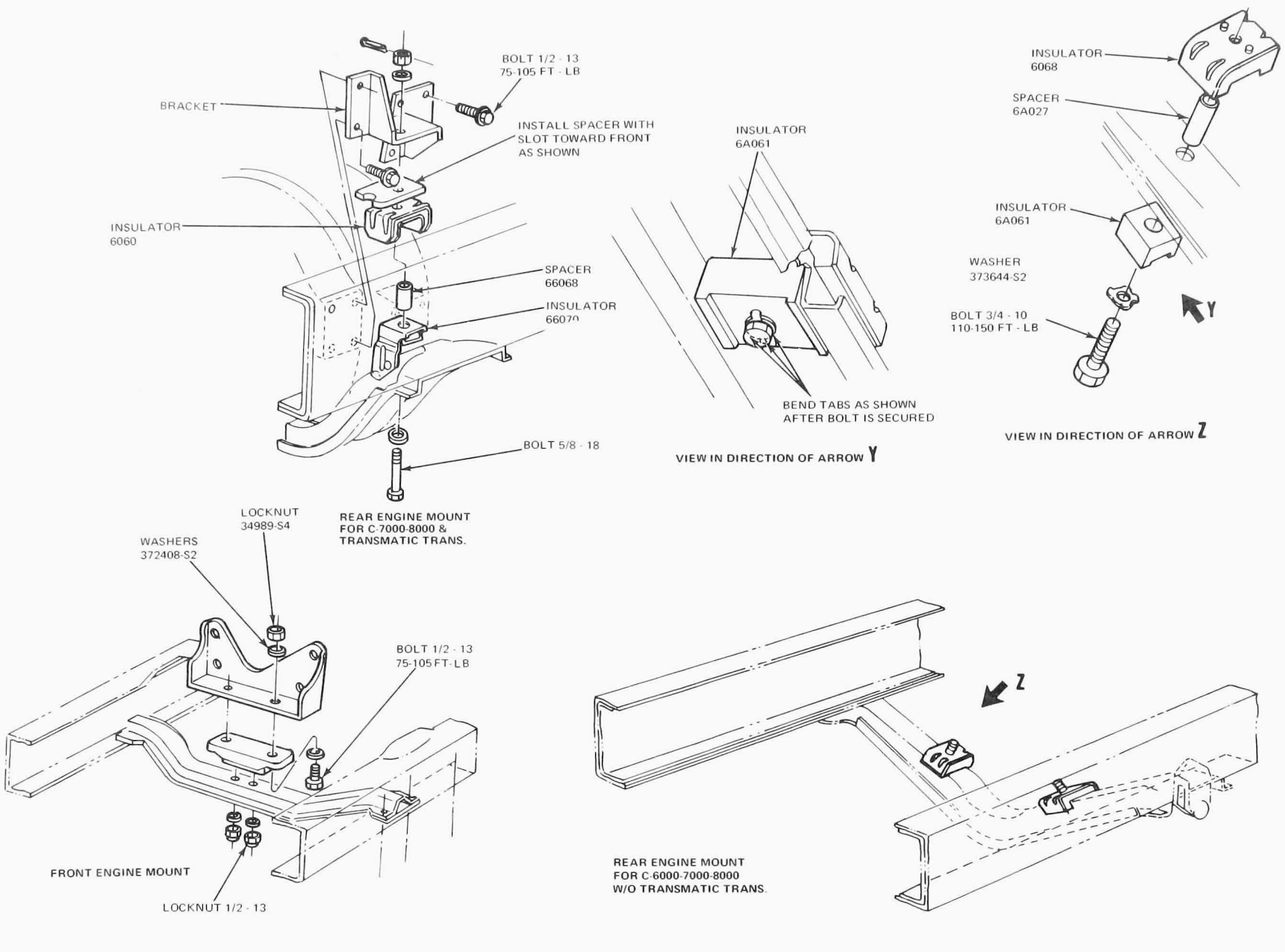

FIG. 3 Ford V-8 Engine SupportscC-6000-7000-8000

REMOVAL AND INSTALLATION

ENGINE ASSEMBLY

Removal

1. Disconnect the battery ground cable from the battery.
2. Drain the cooling system.
3. Release the air pressure in the air supply tank.
4. Disconnect the hood check cable and springs. Support the hood and fenders in a vertical position. Remove the radiator support rod.
5. Remove the radiator and shroud and the fan from the vehicle.
6. Remove the air cleaner and air cleaner attaching bolt.
7. Remove the alternator and identify each wire for installation.
8. Disconnect the power steering hoses if so equipped.
9. Disconnect the heater hoses and positon them out of the way.
10. Disconnect the tachometer drive line from the engine and position it out of the way.
11. Disconnect the throttle linkage from the injection pump.
12. Disconnect the fuel inlet and fuel return lines.
13. Disconnect the air lines from the air compressor.
14. Disconnect the engine shut-off solenoid, the oil sending unit and the temperature gauge sending unit.
15. Disconnect all wires from the starter motor, identify for installation and position them out of the way.
16. Disconnect both exhaust pipes from the exhaust manifolds.
17. Remove the transmission as detailed in Group 16.
18. Disconnect the clutch release mechanism at the clutch release lever.
19. Connect the hoist and lifting tool (LRE1850) to the engine lifting eyes.
20. Remove attaching parts from the engine front support per instructions in this Part.
21. Be sure the lifting tool is tight enough to support weight of engine, then disconnect the engine rear mounts per instructions in this Part.
22. Position all lines, wires and accessories out of the way and lift the engine from vehicle.

Installation

1. Use a hoist and lifting tool (LRE-1805) to lower the engine into position. Start the engine front mount attaching parts and position the engine rear mounts.
2. Install all engine mount bolts and/or nuts and torque to specifications.
3. Install the transmission as detailed in Group 16.
4. Connect the clutch mechanism at the clutch release lever, and adjust the clutch as required (Group 16).
5. Connect both exhaust pipes to the exhaust manifolds.
6. Connect all wires to the starter motor, installing each wire on its respective terminal.
7. Connect the engine shut-off solenoid, the oil sending unit and the temperature gauge sending unit.
8. Connect all air lines to the air compressor.
9. Connect all fuel lines.
10. Connect throttle linkage at injection pump and connect tachometer drive line to engine.
11. Connect heater hoses and power steering lines.
12. Install alternator and connect all wires to their respective terminals.
13. Install the air cleaner.
14. Install the fan and the radiator with shroud. Install the radiator support rod.
15. Install all drive belts and tighten to specifications.
16. Install the hood check cables and springs.
17. Fill cooling system and install the hood.
18. Connect battery ground cable to battery.
19. Check oil and coolant levels, replenish as required.
20. Close drain on air supply tank.
21. Start the engine and check for any oil leaks.
22. Before attempting to move the vehicle, be sure the air supply tank is up to pressure.

SPECIFICATIONS

FORD V-8 DIESEL ENGINES SPECIFICATIONS
FOR ADDITIONAL SPECIFICATIONS REFER TO THE CATERPILLAR SERVICE MANUALS

Item	Engine CID	Specification	Item	Engine CID	Specification
Bore and Stroke (Inches)	522	4.50 x 4.1 4.50 x 4.1	Idle Speed (rpm)	522	525 525
	573	4.50 x 4.5		573	525
	636	4.50 x 5.0		636	525
Firing Order	ALL	1-2-7-3-4-5-6-8	Governed speed	522	3200 3200
				573	3000
				636	2800
Compression Ratio	522	17.5:1 17.5:1			
	573	17.0:1			
	636	16.5:1			

FORD V-8 DIESEL ENGINE OIL CAPACITIES

Engine	Series	US Gallons	Imperial Gallons
Standard Engine	All	3	2-1/2

Ignition System

GROUP 23

	Page
PART 23–01	
General Ignition Service	**23-01-1**
PART 23–10	
Motorcraft Dual Advance Distributors	**23-10-1**
PART 23–15	
Distributor Control Systems	**23-15-1**
PART 23–16	
Motorcraft Dual Advance Distributors With Vacuum Governor Control	**23-16-1**
PART 23–20	
Governors	**23-20-1**

PART 23-01 General Ignition Service

Model Application – All Gas Engines

COMPONENT INDEX	Page
ARE-14-16 TESTER	
Breaker Point Resistance Test	01-5
Distributor Mechanical Operation Test	01-5
Distributor Spark Advance Test	01-6
Insulation and Leakage Test	01-5
ARE-27-44 DWELL TESTER	
Distributor Tests	01-5
ARE-236 TESTER	
Distributor Tests	01-5
Distributor Mechanical Operation Test	01-6
Distributor Spark Advance Test	01-6
Insulation and Leakage Test	01-5
BREAKER POINTS	
Alignment	01-10
Cleaning	01-17
Dwell Angle Adjustment	01-6
Gap Adjustment	01-10
Installation	01-12
Removal	01-12
Resistance Test	01-4
Spring Tension Adjustment	01-10
CENTRIFUGAL ADVANCE MECHANISM	
Adjustment	01-6

COMPONENT INDEX	Page
COIL	
Cleaning	01-17
Coil to Ground Test	01-4
Coil Test	01-4
Spark Intensity Test	01-3
CONDENSER	
Installation	01-12
Removal	01-12
DISTRIBUTOR	
Advance and Retard Check (On Engine)	01-6
Advance and Retard Test	01-6
Cleaning and Inspection	01-16
Centrifugal Advance Adjustment	01-6
Dual Diaphragm Test	01-6
Initial Ignition Timing	01-11
Mechanical Operation Test	01-5
Vacuum Advance Adjustment	01-6
DISTRIBUTOR CAP	
Cleaning and Inspection	01-17
DISTRIBUTOR ROTOR	
Cleaning and Inspection	01-17
GOVERNOR TESTS	01-7

Model Application – All Gas Engines

COMPONENT INDEX	Page	COMPONENT INDEX	Page
IGNITION SYSTEM		RESISTANCE WIRE	
Battery to Coil Voltmeter Test	01-3	Installation	01-13
Breaker Point Resistance Test	01-5	Removal	01-13
Cleaning and Inspection	01-16	Voltmeter Test	01-4
Coil to Ground Voltmeter Test	01-4	SPARK PLUGS	
Ignition Switch Voltmeter Test	01-4	Cleaning and Inspection	01-16
Insulation and Leakage Test	01-5	Installation	01-13
Resistance Wire Voltmeter Test	01-4	Removal	01-13
Secondary (High Tension) Wires Resistance Test	01-4	Testing	01-4
Spark Intensity Test	01-3	SPARK PLUG WIRES	
Starting Ignition Circuit Voltmeter Test	01-4	Removal and Installation	01-12
IGNITION SWITCH		Spark Intensity Test	01-3
Voltmeter Test	01-4	TRANSISTOR IGNITION SYSTEM	
IGNITION SYSTEM–CONVENTIONAL	01-3	Tests	01-3
		VACUUM ADVANCE MECHANISM	
		Adjustment	01-6

All 1973 truck gasoline engines are equipped with the Imco Exhaust Emission Control System. Positive crankcase ventilation is continued on all gasoline-powered trucks.

E-Series and F-100 trucks using a 240-1V, is equipped with a Transmission Regulated Spark Control System (TRS) for closer control of the spark advance during low speed and idle operation. This control is designed to further reduce engine exhaust emission. Service information on emission controls are given in Volume VI of this manual.

Distributor specifications (Parts 23-10 and 23-16) have been, in some cases, changed. New distributor part numbers reflect these changes.

Other than the above, the 1973 ignition systems are basically the same as the 1972 systems.

To maintain the required exhaust emission levels, the carburetor must be kept in good operating condition and be adjusted to specifications, and the engine should be in good operating condition.

Additional engine performance checks are required to keep the exhaust emissions at the specified minimum pollutant level. Refer to the applicable owners manual for these performance checks and the recommended intervals.

When performing tests, adjustments or repairs to the engine, ignition system or fuel system, it is essential to follow the procedures and specifications in Groups 21, 23 and 24 of this manual.

This part covers conventional ignition system description, test, adjustments and repair operations.

The vacuum control valve (PVS Valve) is covered in Part 23-15.

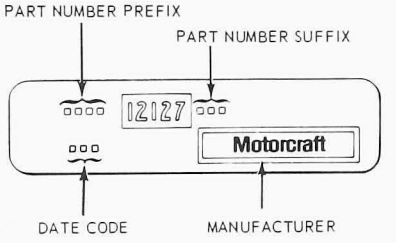

FIG. 1 Distributor Identification

Complete engine performance specifications, including engine, ignition and fuel system components is covered in the Specifications Booklet. All other specifications for ignition system components are covered in Parts 23-10 and 23-16.

For distributor removal, disassembly, assembly, installation, major repair procedures and specification, refer to the pertinent part of this group.

DISTRIBUTOR IDENTIFICATION

The distributor identification number is stamped on the distributor housing. The basic part number for ungoverned distributors is 12127. To procure replacement parts, it is necessary to know the part number prefex and suffix and, in some cases, the design code change (Fig. 1).

Always refer to the Master Parts Catalog for parts usage and interchangeability before replacing a distributor or a component part for a distributor.

TESTING

GENERAL INFORMATION

CONVENTIONAL IGNITION SYSTEM

The conventional ignition system consists of a primary (low voltage) and a secondary (high voltage) circuit (Fig. 2).

The primary circuit consists of the:

1. Battery.
2. Ignition switch.
3. Primary circuit resistance wire.
4. Primary windings of the ignition coil.
5. Breaker points.
6. Condenser.

The secondary circuit consists of the:

1. Secondary windings of the ignition coil.
2. Distributor rotor.
3. Distributor cap.
4. High tension wires.
5. Spark plugs.

When the breaker points are closed, current flows from the battery through the ignition switch to the primary windings in the coil, then to ground through the closed breaker points. When the breaker points open, the magnetic field built up in the primary windings of the coil moves through the secondary windings of the coil producing high voltage. **High voltage is produced each time the breaker points open.** The high voltage flows through the coil high tension lead to the distributor cap where the rotor distributes it to one of the spark plug terminals in the distributor cap. This process is repeated for every power stroke of the engine.

TRANSISTOR IGNITION SYSTEM

The permatuned transistor ignition system is available on the 361, 391, 401, 477 and 534 V-8 C10 engines. Figure 3 shows a schematic of the transistor ignition system.

The ignition coil primary in the transistor system is designed to draw 12 amperes peak current, or approximately 5.5 amperes average current as indicated on an ammeter, in order to provide high spark plug voltage at the higher engine speeds.

The transistor in the system acts as a heavy duty switch or relay. It is similar in action to a horn relay, except that it has no moving parts, and thus acts with very little time lag. The transistor is connected between the battery and the coil, and is used to make and break the coil primary circuit.

The distributor controls the transistor. The 7.1-7.9 ohm resistor, connected between the distributor and the transistor (in the wiring harness), limits the transistor control current (and distributor point current) to 0.5 ampere. The distributor low point current eliminates pitting and gives long distributor point life.

The amplifier assembly (Fig. 4) is mounted away from the engine to protect the parts from engine heat.

A ceramic ballast resistor block is mounted in the engine compartment.

DIAGNOSIS

Refer to the appropriate Section of the Truck Diagnosis Manual for diagnosis procedures.

TRANSISTOR IGNITION SYSTEM

Do not use any testing procedures or conventional shortcuts other than those listed below, or extensive damage can result to the system.

TESTS

SPARK INTENSITY TEST

Trouble Isolation

1. Disconnect the brown wire from the starter relay I terminal and the red and blue wire from the starter relay S terminal.
2. Remove the coil high tension lead from the distributor cap.
3. Turn on the ignition switch.
4. While holding the high tension lead approximately 3/16 inch from the cylinder head or any other good ground, crank the engine by using an auxiliary starter switch between the starter relay battery and S terminals.

If the spark is good, the trouble lies in the secondary circuit.

If there is no spark or a weak spark, the trouble is in the primary circuit, coil to distributor high tension lead, or the coil.

Primary Circuit

A breakdown or energy loss in the primary circuit can be caused by: defective primary wiring, or loose or corroded terminals; burned, shorted, sticking or improperly adjusted breaker points: a defective coil; or defective condenser.

A complete test of the primary circuit consists of checking the circuit from the battery to the coil, the circuit from the coil to ground, and the starting ignition circuit.

Excessive voltage drop in the primary circuit will reduce the secondary output of the ignition coil, resulting in hard starting and poor performance.

To isolate a trouble in the primary circuit, use a voltmeter and perform the following tests: Battery to Coil; Starting Ignition Circuit; Resistance Wire; Coil to Ground; or Breaker Points.

Secondary Circuit

A breakdown or energy loss in the secondary circuit can be caused by: fouled or improperly adjusted spark plugs; defective high tension wiring; or high tension leakage across the coil, distributor cap or rotor resulting from an accumulation of dirt.

To check the spark intensity at the spark plugs, thereby isolating an ignition problem to a particular cylinder, proceed as follows:

1. Disconnect a spark plug wire (by hand only). **Check the spark intensity of one wire at a time.**
2. Install a terminal adapter in the terminal of the wire to be checked. Using insulated pliers hold the adapter approximately 3/16 inch from the exhaust manifold and crank the engine, using a remote starter switch. The spark should jump the gap regularly.
3. If the spark intensity of all the wires is satisfactory, the coil, condenser, rotor, distributor cap and the secondary wires are probably satisfactory.

If the spark is good at only some wires, check the resistance of the faulty leads.

If the spark is equal at all wires, but weak or intermittent, check the coil, distributor cap and the coil to distributor high tension wire. The wire should be clean and bright on the conducting ends, and on the coil tower and distributor sockets. The wire should fit snugly and be bottomed in the sockets.

Battery to Coil Voltmeter Test

1. Connect the voltmeter leads as shown in Fig. 5.
2. Install a jumper wire from the distributor terminal of the coil to a good ground on the distributor housing.
3. Turn the lights and accessories off.
4. Turn the ignition switch on.
5. If the voltmeter reading is between 4.5 and 6.9 volts, the primary circuit from the battery to the coil is satisfactory.

6. If the voltmeter reading is greater than 6.9 volts, check the following:

The battery and cables for loose connections or corrosion.

The primary wiring for worn insulation, broken strands, and loose or corroded terminals.

The resistance wire for damage.

The starter relay to ignition switch for malfunctions.

If the voltmeter reading is less than 4.5 volts the resistance wire should be replaced.

Starting Ignition Circuit Voltmeter Test

1. Connect the voltmeter leads as shown in Fig. 5.
2. Disconnect and ground the coil to distributor high tension lead at the distributor.
3. With the ignition switch off, crank the engine by installing a jumper wire between the battery and the S terminal of the starter relay while observing the voltage drop.
4. If the voltage drop is 0.3-0.4 volt or less, the starting ignition circuit is satisfactory.
5. If the voltage drop is greater than 0.4 volt, clean and tighten the terminals in the circuit or replace the wiring as necessary.

Ignition Switch Voltmeter Test

1. Connect the voltmeter leads as shown in Fig. 6.
2. Install a jumper wire from the distributor terminal of the coil to a good ground on the distributor body.
3. Turn all of the accessories and lights off.
4. Turn the ignition switch on.
5. If the voltmeter reading is 0.3 volt or less, the ignition switch and the relay to switch wire are satisfactory.
6. If the voltmeter reading is greater than 0.3 volt, the ignition switch and/or the wire are defective.

Resistance Wire Voltmeter Test

1. Connect the voltmeter leads as shown in Fig. 7.
2. Install a jumper wire from the DIST terminal of the coil to a good ground.
3. Turn all of the accessories and lights off.
4. Turn the ignition switch on.
5. If the voltmeter reading is between 6.6 and 4.5 volts, the resistance wire is satisfactory.
6. If the voltmeter reading is greater than 6.6 volts, or less than 4.5 replace the resistance wire.
7. Turn the ignition switch off. Disconnect the voltmeter leads. Remove the jumper wire connected to the coil DIST terminal and the distributor. Remove the jumper wire connected to the coil BAT terminal and the coil BAT lead. Connect the BAT lead to the BAT terminal and go on to the Coil-to-Ground Test.

Coil-to-Ground Voltmeter Test

1. Connect the voltmeter leads as shown in Fig. 8.
2. Close the breaker points.
3. Turn all lights and accessories off.
4. Turn the ignition switch on.
5. If the voltmeter reading is 0.25 volt or less, the primary circuit from coil-to-ground is satisfactory.
6. If the voltmeter reading is greater than 0.25 volt, test the voltage drop between each of the following:

The coil and the breaker point connections of the coil-to-distributor primary wire.

The movable breaker point and the breaker plate.

The breaker plate and the distributor housing.

The distributor housing and engine ground.

7. Turn the ignition switch off. Disconnect the voltmeter leads.

Breaker Points Check

Clean and inspect the breaker points by following the procedure under Cleaning and Inspection in this Part.

The breaker point dwell can be checked with a distributor tester or a dwell meter by following the procedure under Distributor Tests in this section of the manual.

The breaker point resistance can be checked with a Rotunda RE-1416 distributor tester by following the procedure under Distributor Tests in this section of the manual.

Coil Test

Clean and inspect the coil by following the procedure under Cleaning and Inspection in this Part.

Check the coil on a coil tester by following the manufacturers instructions. Check for ohms resistance both primary and secondary. Also check the amperage draw both with the engine idling and stopped. These checks should all fall within specifications.

Secondary (High Tension) Wires Resistance Test

The secondary wires include the wires connecting the distributor cap to the spark plugs and the wire connecting the center terminal of the distributor cap to the center terminal of the ignition coil.

Clean and inspect the secondary wiring by following the procedure under Cleaning and Inspection in this Part.

These wires are the radio resistance-type which filter out the high frequency electrical impulses that are the source of ignition noise interference. The resistance of each wire should not exceed 1000 ohms per inch. When checking the resistance of the wires or setting ignition timing, do not puncture the wires with a probe. The probe may cause a separation in the conductor.

When removing the wires from the spark plug, grasp and twist the moulded cap using the hand only, then pull the cap off the spark plug. Do not pull on the wire because the wire connection inside the cap may become separated or the insulator may be damaged.

To check the spark intensity at the spark plugs, proceed as follows:

1. Disconnect a spark plug wire. Check the spark intensity of one wire at a time.
2. Install a terminal adapter in the terminal of the wire to be checked. Hold the adapter approximately 3/16 inch from the exhaust manifold or good ground with insulated pliers and crank the engine, using a remote starter switch. The spark should jump the gap regularly.
3. If the spark intensity of all the wires is satisfactory, the coil, condenser, rotor, distributor cap and the secondary wires are probably satisfactory.

If the spark is good at only some wires, check the resistance of the faulty leads.

If the spark is equal at all wires, but weak or intermittent, check the coil, distributor cap and the coil to distributor high tension wire.

Spark Plug Test

Inspect, clean and gap the plugs. After the proper gap is obtained, check the plugs on a testing machine. Compare the sparking efficiency of the cleaned and gapped plug with a new plug. Replace the plug if it fails to meet 70 percent of the new plug performance.

DISTRIBUTOR CHECKS

Distributor Shaft End Play

If the shaft end play is not to specifications, check the location of the gear on the shaft (6-cyl. engine distributor), or the distributor shaft collar, (dual advance 8-cyl. engine distributor).

6-Cyl. Engine Distributor

The shaft end play can be checked with the distributor installed on the engine.

1. Mount a dial indicator on the distributor so that the indicator tip rests on the top of the distributor shaft.
2. Push the shaft down as far as it will go and set the dial indicator on zero.
3. Pull the distributor shaft upward as far as it will go and read the end play. The end play should be within

specifications with the distributor removed or installed.

8-Cyl. Engine Distributor

1. Remove the distributor from the engine.
2. Place the distributor in the holding tool and clamp it in a vise.
3. Push the distributor shaft upward as far as it will go, and check the end play with a feeler gauge placed between the collar and the distributor base. The end play should be within the specified limits. If the shaft end play is not to specifications, check the location of the distributor shaft collar.

DISTRIBUTOR TESTS—ROTUNDA ARE-27-44 DWELL TESTER

Test Connections Conventional Ignition System Distributor

1. Disconnect the distributor primary wire at the coil. Connect a short jumper wire to the DIST terminal of the coil and the distributor primary wire. Connect the red lead to the jumper wire.
2. Connect the black lead to a good ground on the engine.

Transister Ignition System distributor

1. Connect the red lead to either terminal shown in Fig. 3.
2. Connect the black lead to either tach block terminal shown in Fig. 3.

Dwell Angle Check

1. Disconnect and plug the distributor vacuum line(s). Connect the tester.
2. Turn the test control knob to the set position.
3. Adjust the set control knob until the hand on the dwell meter lines up with the set line.
4. Start the engine and let it idle.
5. Turn the test control knob to the 8 CYL position.
6. Read the dwell angle on the dwell meter and compare the reading to specifications.
7. Turn off the engine.
8. If the dwell angle was below the specified amount, the breaker point gap is too wide. If the dwell angle was above the specified amount, the breaker point gap is too close.

If the dwell is to specifications, turn the test selector knob to the OFF position and disconnect the tester leads, and jumper wire; then connect the distributor vacuum line(s).

Dwell Angle Adjustment

If the dwell angle is not within specifications, proceed as follows:

1. Remove the coil high tension lead from the distributor and ground it.
2. Remove the distributor cap and place it out of the way.
3. Loosen the breaker point attaching screw near the breaker point contacts.
4. With the ignition on, crank the engine with an auxiliary starter switch.
5. Release the auxiliary starter switch and tighten the breaker point attaching screw.
6. Since the adjustment may have changed when the attaching screw was tightened, crank the engine again with the auxiliary starter switch and check the dwell. When the dwell is properly adjusted, remove the jumper wire, auxiliary starter switch and tester leads and install the distributor cap and coil high tension lead.

Connect the distributor vacuum line(s).

DISTRIBUTOR TESTS—ROTUNDA DISTRIBUTOR TESTER

Mounting Distributor ARE-236 Tester

1. Adjust the distributor support arm in relation to the distributor shaft length.
2. Set the distributor in the support arm and enter the lower end of the distributor shaft in the Syncrograph chuck.
3. Tighten the chuck on the distributor shaft, using the wrench located near the support arm column.
4. Align the distributor shaft by shifting the support arm and distributor, and tighten the clamp screw.
5. Clamp the distributor securely in the distributor support arm clamp so that it will not turn in its mounting.
6. Connect the Synchrograph test lead to the primary wire of the distributor.
7. Connect the tester vacuum line to the vacuum diaphragm fitting. Since the transistor ignition distributor does not have a condenser, (the wire has been cut) it will be necessary to install one in the circuit of the tester (Fig. 9).

Mounting Distributor ARE-14-16 Tester

1. Clamp the distributor securely in the distributor support arm clamp so that it will not turn in its mounting.
2. Loosen the hand-operated locking screw on the side of distributor support arm, and adjust the support arm column up or down by turning the crank on the knob at the top of the column until the distributor shaft or adapter shaft can be securely fastened in the driving chuck.
3. Tighten the drive chuck securely to the distributor drive shaft.
4. Rotate the drive chuck by hand to make sure the distributor shaft turns freely and then tighten the locking screw on the distributor support arm.
5. Connect the Synchrograph test lead to the primary or distributor-transistor lead wire of the distributor.

Breaker Point Resistance ARE-14-16 Tester

1. Turn the test selector to the POINT RES. position.
2. Rotate the chuck by hand until the distributor breaker points are closed.
3. The meter pointer on the cam angle meter should read in the OK zone at the left side of the meter scale. If the meter pointer does not fall in the OK zone, there is excessive resistance caused by a faulty contact across the distributor points, a faulty primary lead, or a poorly grounded base plate. A faulty contact across the distributor points indicates improper spring tension or burned or pitted points.

Insulation and Leakage ARE-236 and ARE-14-16 Testers

1. Turn the test selector to the cam angle position and rotate the chuck by hand until the distributor breaker contacts are open.
2. The cam angle meter should show a zero reading. If a zero reading is not obtained, a short circuit to ground exists.

A short could be caused by poor primary wire insulation, a shorted condenser or a short between the breaker arm and breaker plate.

Mechanical Operation—Are-236 and ARE-14-16 Testers

1. Turn the OFF, SET, CAM, SYNC. switch to the SET position.
2. Adjust the SET TACH control so that tachometer pointer is on the SET line.
3. Turn the OFF, SET, CAM, SYNC. switch to the SYNC. position.
4. On an ARE-14-16 Tester, turn the test selector to the SYNCHRO. position and check to make sure that the drive chuck is securely tightened on the distributor shaft.
5. Turn the MOTOR switch to the LEFT for 8 cylinder setting.
6. Adjust the speed control to vary the distributor speed between 400 and 4000 engine rpm, or at the maximum speed of the engine on which the distributor is used. Erratic or thin faint flashes of light preceding the regular flashes as the speed of rotation is increased can be

due to weak breaker arm spring tension or binding of the breaker arm on the pivot pin.

7. Operate the distributor at approximately 2500 engine rpm and move the protractor scale so that the zero degree mark on the scale is opposite one of the neon flashes. The balance of all the flashes should come within 1 degree, plus or minus, evenly around the protractor scale. A variation larger than 1 degree or erratic or wandering flashes may be caused by a worn cam or worn or bent distributor shaft.

Dwell Angle

Disconnect and plug the distributor vacuum line(s).

1. On an ARE-236 Tester turn the OFF, SET, CAM, SYNC. switch to the CAM position. Operate the distributor at about 1000 rpm.
2. On an ARE-14-16 Tester, turn the cylinder selector to the 8 position.

Turn the test selector switch to the cam angle position and operate the distributor at approximately 1000 engine rpm.

3. Adjust the breaker point gap until the dwell angle is to specifications. Connect the distributor vacuum line(s).

Breaker Plate Wear

A worn breaker plate on the distributor will cause the breaker point gap and contact dwell to change as engine speed and load conditions are varied.

Adjust the test set to 0 degree advance, 0 inches vacuum, and 100 rpm. Adjust the dwell angle to 26 degrees. Apply vacuum to the distributor diaphragm and increase it very slowly while observing the indicated dwell angle. The maximum dwell angle variation should not exceed 4 degrees when going from zero to maximum vacuum at constant rpm. If the dwell angle variation exceeds this limit, there is excessive wear at the stationary subplate pin or the diaphragm rod is bent or distorted.

Distributor Advance and Retard Check—On Engine

Check the initial ignition timing, centrifugal advance, vacuum advance, and vacuum retard (dual-diaphragm distributor), following the procedure under Initial Ignition Timing Adjustment.

DISTRIBUTOR SPARK ADVANCE TEST—ARE-236 AND ARE-14-16 TESTERS

The spark advance is checked to determine if the ignition timing advances in proper relation to engine speed and load.

Dual Advance Distributor

1. Check the contact dwell. If the contact dwell or the breaker point gap is not within specifications, adjust the breaker points.
2. Check the breaker arm spring tension and adjust it, if necessary.

The dual advance distributor has two independently operated spark advance systems. Each system is adjusted separately. **Adjust the centrifugal advance before adjusting the vacuum advance.**

Centrifugal Advance

1. Do not connect the test set vacuum line to the diaphragm. Set the test set to 0 degree advance and the initial rpm setting listed in the specifications.
2. Operate the distributor in the direction of rotation (counterclockwise) and slowly increase the rpm to the setting specified for the first advance reading listed in the specifications.

If the correct advance is not indicated at this rpm, stop the distributor and bend one spring adjustment bracket to change its tension (Figs. 10 and 11). Bend the adjustment bracket away from the distributor shaft to decrease advance (increase spring tension) and toward the shaft to increase advance (decrease spring tension). After the adjustment is made, identify the bracket.

3. After an adjustment has been made to one spring, check the minimum advance point again.
4. Operate the distributor at the specified rpm to give an advance just below the maximum. If this advance is not to specifications, stop the distributor and bend the other spring bracket to obtain the correct advance.
5. Check the advance at all rpm settings listed in the specifications. Operate the distributor both up and down the rpm range.

Vacuum Advance

1. Connect the test unit vacuum line to the horizontal connection (end of diaphragm). Set the test unit at 0 degree advance, 0 vacuum, and at 1000 rpm.
2. Check the advance at the first vacuum setting given in the specifications.
3. If the advance is incorrect and adjustment is required, disconnect the vacuum line and insert a 1/8 inch socket head wrench in the end of the diaphragm (Fig. 12). Turn the wrench clockwise to increase the vacuum advance or counterclockwise to decrease it.
4. After one vacuum setting has been adjusted, the others should be checked. **Do not change the original rpm setting when going to a different vacuum setting.** If the other settings are not within limits, there is incorrect spring tension, leakage in the vacuum chamber and/or line.

To check the diaphragm for leakage (either, or both on dual diaphragm distributors):

Adjust the vacuum pressure of a distributor test unit to its maximum position. Hold your finger over the end of the tester's vacuum hose and note the maximum reading obtained. **Do not exceed 25 inches Hg.**

If the maximum reading is 25 inches Hg or less, connect the tester's vacuum line to the vacuum fitting on the diaphragm to be tested without changing any of the adjustments. The maximum gauge reading should not be less than it was above. If it is less, the diaphragm is leaking and should be replaced.

DISTRIBUTOR DUAL DIAPHRAGM TEST

Vacuum Advance

1. Disconnect the vacuum lines from both the outer and inner diaphragms. Plug the line removed from the inner diaphragm.
2. Connect a tachometer and increase the idle speed by setting the throttle on the first step of the fast idle cam.
3. Using a timing light observe ignition timing setting.
4. Connect the carburetor vacuum line to the outer diaphragm. The timing should advance immediately. Adjust if necessary.

Vacuum Retard

1. Readjust the engine idle speed to 550-600 rpm.
2. Using a timing light, observe the spark timing.
3. Remove the plug from the manifold vacuum line and connect the line to the inner diaphragm.
4. The timing should retard immediately. Replace the dual diaphragm unit if the retard portion is out of calibration, the advance portion cannot be calibrated to specifications, if either of the diaphragms are leaking.

GOVERNOR TESTS

Velocity Governor

The governor is calibrated for sensitivity and adjusted at the factory. There are no provisions made for

remedying malfunctions of this governor in service except to increase or decrease the governed speed (refer to Velocity Governor Adjustment in Part 23-20). If the governor is inoperative, too sensitive, or not sensitive enough, replace the unit.

The 330 MD engine governor can be adjusted for altitude operation. Refer to Part 23-20 for the procedure.

Vacuum Governor

To determine if the governor is at fault when loss of power and performance are encountered, make the following test:

1. Disconnect the governor vacuum line at the carburetor.
2. Operate the engine under load to determine if the engine reaches governed rpm. **Disconnecting the governor line makes the governor control inoperative. Do not exceed recommended governor engine rpm.**
3. If the engine performs satisfactorily the trouble is the governor control. If the engine does not operate satisfactorily, the trouble is not in the governor system. Connect the governor vacuum line.

If the trouble is in the governor, it can be further localized to the controlling unit, vacuum lines, or the throttle actuating unit as follows:

Connect the governor vacuum line to the carburetor. Disconnect the governor vacuum line at the distributor. Operate the engine at governed speed. **Disconnecting the governor line makes the governor control inoperative. Do not exceed recommended governor engine rpm.** Place a finger over the end of the line.

If there is no change in engine rpm, the trouble is in the throttle actuating unit (on the carburetor).

If the engine speed changed, the trouble is in the controlling unit (on the distributor).

Diagnosis Procedure

Loss of Speed Control. Check for vacuum leaks and the operation of the governor valve in the distributor.

Check for proper sealing of the diaphragm cover.

Check the diaphragm for leaks by removing the vacuum line at the carburetor and attaching a vacuum pump to the fitting at the carburetor. Apply 25 inches Hg following the instructions of the test unit manufacturer. The vacuum reading should not drop off when the vacuum is applied to the diaphragm assembly. If a leak is indicated by the test, replace the diaphragm.

Erratic Operation Under Load. Check for binding of the throttle shaft and throttle lever.

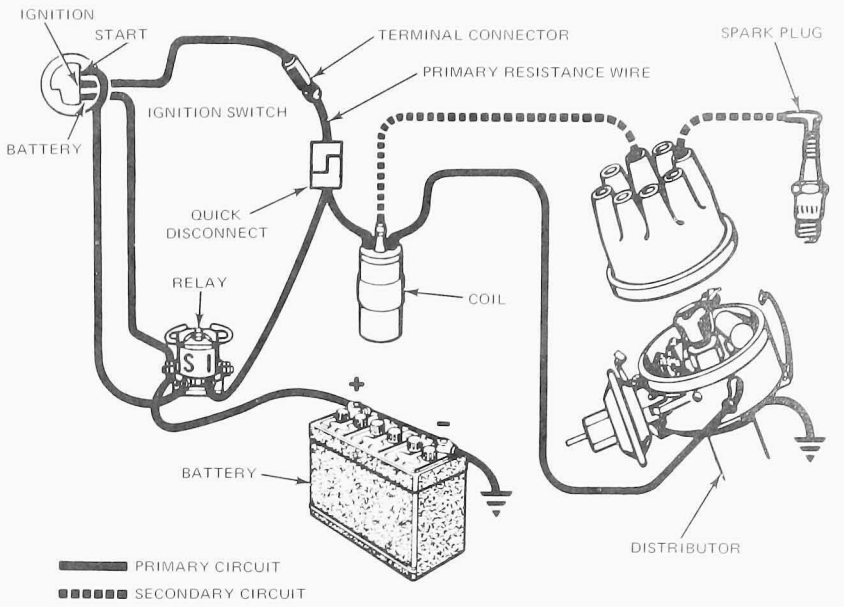

FIG. 2 Typical Conventional Ignition System Circuit

No Governing Action. Vacuum leak in the controlling unit, throttle actuating unit, or in the fittings or lines.

Governor valve in the controlling unit stuck.

Passages in the carburetor blocked.

Over Governing. Passages in the carburetor and/or distributor restricted.

Improper governor adjustment.

Governor spring pin in throttle actuating unit installed in the wrong hole.

Mechanical Governor

If under certain conditions of loading, the engine will not approach the no load governed engine speed within 200-300 rpm, the load limitation of the engine has been exceeded, or the governor throttles the engine too soon, make the following test:

Governor Throttle Linkage

Preliminary Adjustment

1. Disconnect the governor-to-carburetor throttle control rod at the governor.
2. Make sure the throttle control rod is free to operate in all positions.
3. Check the primary spring location on the governor control lever arm. The spring should be in the inner hole on the 2 venturi carburetor, and in the outer hole on the 4 venturi carburetor. Change the spring location if it is not correct.
4. Check the auxiliary secondary spring. Replace the spring if it has been overstretched.
5. To adjust the primary spring tension, loosen the top nut on the eye bolt. Tighten the bottom nut finger tight, then tighten the nut two additional full turns. After adjusting, lock eye bolt in place by tightening bottom nut.
6. With accelerator in wide open throttle position and auxiliary lever fully forward, adjust the governor-to-carburetor throttle control rod to fit in the auxiliary control rod hole. Next, shorten the control rod one more full turn. This will help to avoid compression of the control rod linkage.
7. Attach control rod to the auxiliary lever and depress accelerator pedal to be sure that wide open throttle is achieved.

Engine Speed Final Adjustment

1. Bring engine up to normal operating temperature.
2. Adjust governor to obtain the recommended engine no-load rpm by depressing the accelerator to the full wide-open throttle position. Adjust speed as follows: To increase rpm, loosen the top nut on the primary spring eye bolt and tighten the bottom, (increasing the spring tension). To decrease rpm, loosen the bottom nut and tighten the top nut, (decreasing the spring tension).

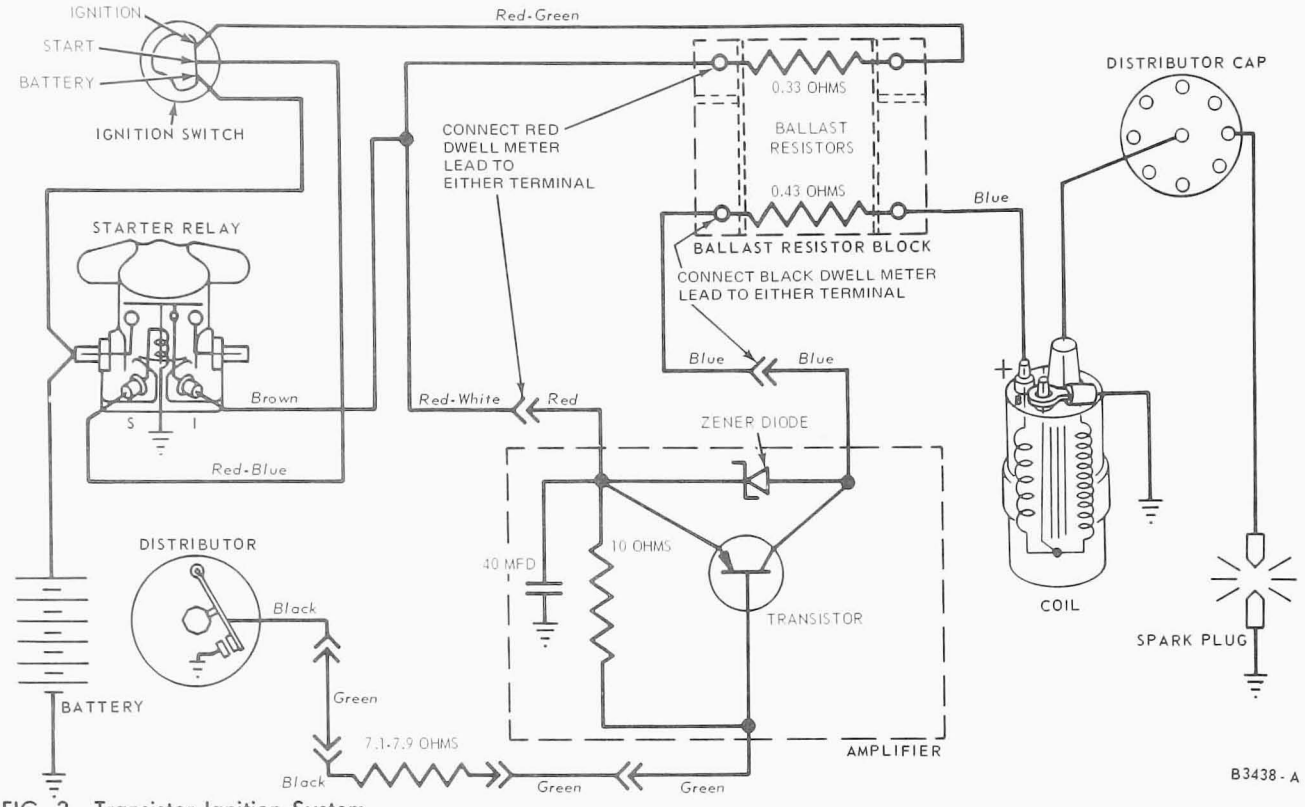

FIG. 3 Transistor Ignition System

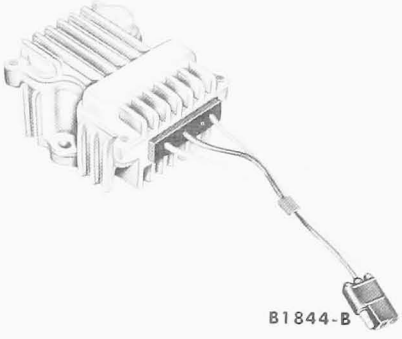

FIG. 4 Amplifier Assembly

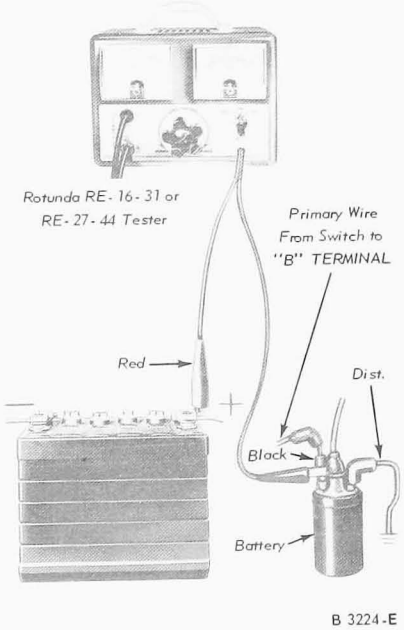

FIG. 5 Battery-to-Coil and Starting Ignition Circuit Test

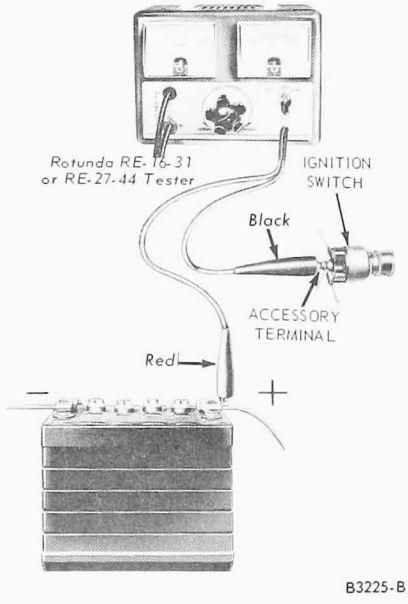

FIG. 6 Ignition Switch Test

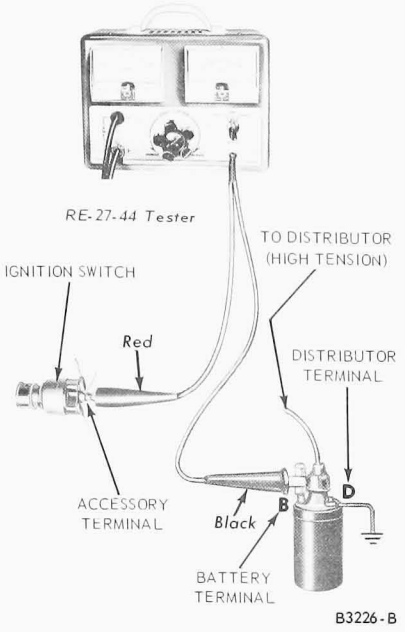

FIG. 7 Resistance Wire Test

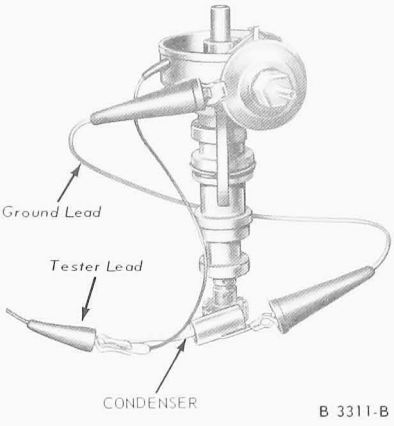

FIG. 9 Testing Transistor Ignition Distributor

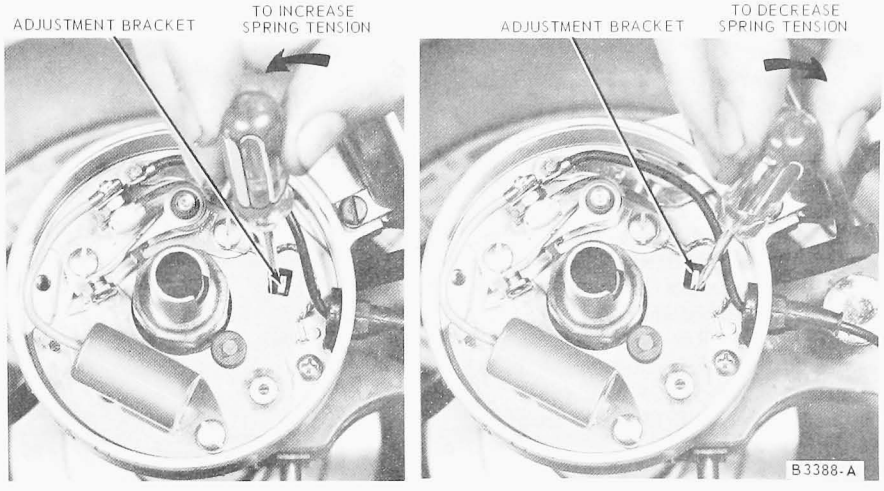

FIG. 10 Centrifugal Advance Adjustment

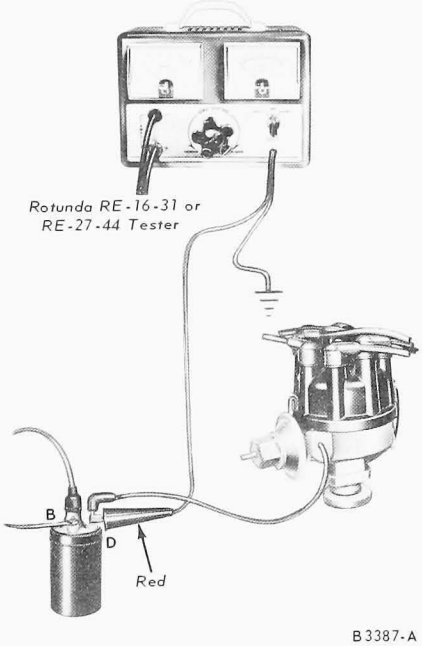

FIG. 8 Coil to Ground Test

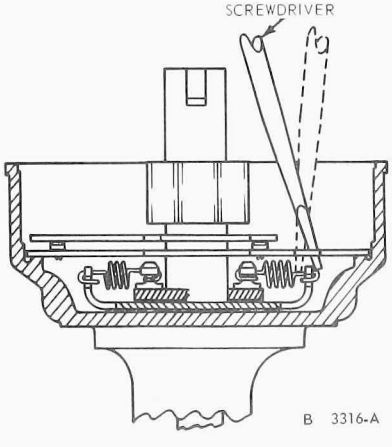

FIG. 11 Centrifugal Advance Adjustment

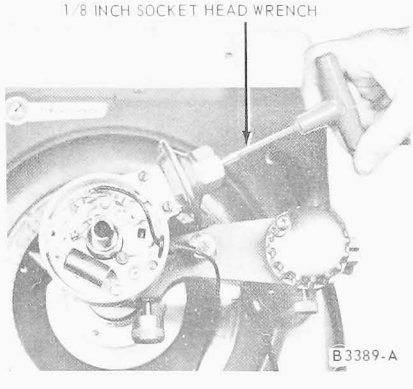

FIG. 12 Adjusting Vacuum Advance

ADJUSTMENTS

GENERAL PROCEDURES

Accurate ignition system adjustments are of great importance in the control of hydro-carbon and carbon monoxide emissions for reducing air pollution.

After any adjustment of ignition timing and distributor point dwell, check the distributor automatic advance for proper operation.

To keep engine emissions controlled within the limits of government regulations, the carburetor fuel mixture and idle speed adjustments should be checked after making ignition system adjustments. Also the exhaust control valve (if so equipped), crankcase ventilation system, and vacuum systems must be in good operating condition. Refer to the applicable Group in this manual for maintenance and repair procedures.

Initial Ignition Timing

Because of the high engine idle speeds required on exhaust emission control engines, precautions must be taken when setting the initial ignition timing to be sure that the distributor is not partially advanced. To be sure that no distributor advance is taking place, idle speed should be reduced to 600 rpm **after the vacuum hoses have been disconnected from the diaphragm unit and plugged.** Reset the idle to the specified rpm after adjusting the initial timing. Initial ignition timing and idle specifications for 1973 trucks are given in Specifications Booklet.

Breaker Point Alignment

The vented-type **pivoted** breaker points must be accurately aligned and strike squarely to assure normal breaker point life. Misalignment of these breaker point surfaces can cause premature wear, overheating and pitting.

1. Turn the cam so that the breaker points are closed and check the alignment of the points (Fig. 13).

If the distributor is in the engine, close the points by proceeding as follows:

With the ignition switch off and the primary wire disconnected from the coil, crank the engine with an auxiliary starter switch.

2. Using the tool shown and **exerting very light pressure,** align the breaker points to make full face contact by bending the stationary breaker point bracket (Figs. 14 and 15). **Do not bend the breaker arm.**
3. After the breaker points have been properly aligned, adjust the breaker point gap or dwell to specification.

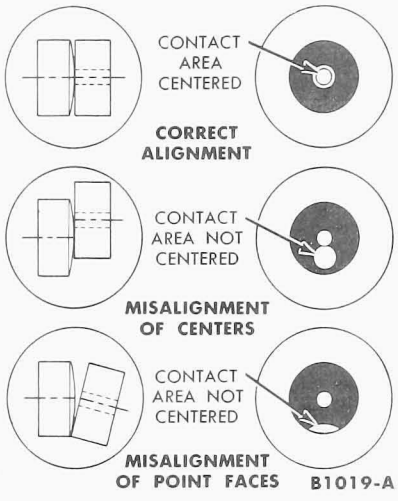

FIG. 13 Checking Pivoted Breaker Point Alignment

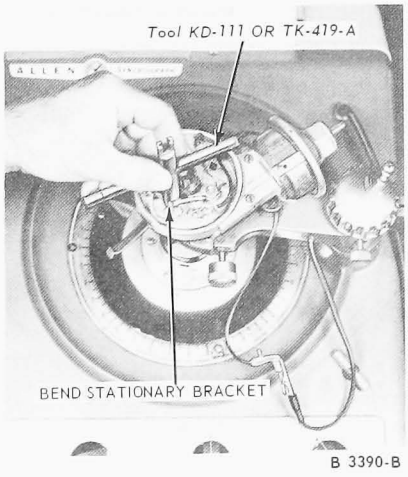

FIG. 14 Aligning Breaker Points

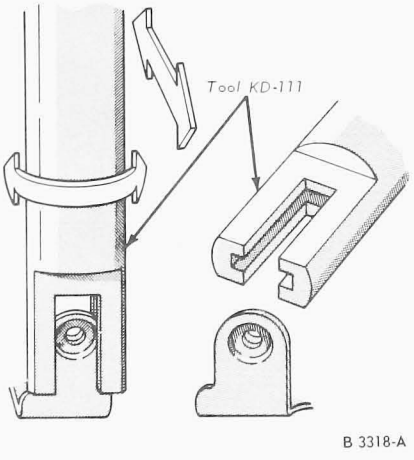

FIG. 15 Using Alignment Tool

Breaker Point Gap Adjustment

A scope, a dwell meter, or a feeler gauge can be used to check the gap of new breaker points.

A scope or a dwell meter should be used to check the gap of used breaker points. Due to the roughness of used points, it is not advisable to use a feeler gauge to check the gap.

To check and adjust the breaker points with a feeler gauge:

1. Check and adjust the breaker point alignment.
2. Rotate the distributor until the rubbing block rests on the peak of a cam lobe.

If the distributor is in the engine, place the rubbing block on the peak of the cam by proceeding as follows:

Crank the engine with an auxiliary starter switch until the breaker point rubbing block is on the highpoint of a cam lobe. Insert the correct blade of a clean feeler gauge between the breaker points (Fig. 16). Adjust the points to the correct gap and tighten the screws.

Apply a light film of distributor cam lubricant (C4AZ-19D530-A) to the cam when new points are installed. **Do not use engine oil to lubricate the distributor cam.**

Set the ignition timing.

If a scope or a dwell meter is used to adjust new points, be sure the points are in proper alignment. Also, set the contact dwell to the low setting.

To check and adjust the breaker points with a scope, refer to the scope manufacturer's instructions.

To check and adjust the breaker points with a dwell meter, refer to Distributor Tests—Rotunda ARE-27-55 Dwell Tester.

Breaker Point Spring Tension Adjustment

Correct breaker point spring tension is essential to proper engine operation and normal breaker point life. If the spring tension is too great, rapid wear of the breaker arm rubbing block will result, causing the breaker point gap to close up and retard the spark timing. If the spring tension is too weak, the breaker arm will flutter at high engine rpm resulting in an engine miss.

To check the spring tension on the breaker points, place the hooked end of the spring tension gauge over the movable breaker point. Pull the gauge at a right angle (90 degrees) to the movable arm until the breaker points just start to open (Fig. 17). If the tension is not within specifications, adjust the spring tension.

To adjust the spring tension (Fig. 18):

1. Disconnect the primary lead wire and the condenser lead.
2. Loosen the nut holding the spring in position. **Move the spring toward the breaker arm pivot to decrease tension and in the opposite direction to increase tension.**
3. Tighten the lock nut; then check spring tension. Repeat the adjustment until the specified spring tension is obtained.
4. Install the primary lead wire and the condenser lead.

IGNITION TIMING

Timing Mark Locations

The timing marks and their locations are illustrated in Figs. 19, 20 and 21.

The timing mark on the 240 engine in the Econoline and the 240 and 300 engines in P-Series trucks is a machined groove on the flywheel (Standard Transmission) or a stamped line on the flexplate (Automatic Transmission). It is viewed through an opening in the engine rear cover plate (Fig. 21) on the lower left side of the engine. A rubber plug covers the opening to prevent the entrance of dust and dirt. Steel stamped degree marks ranging from 0 degree or top dead center (TDC) to 14 degrees, before top dead center (BTDC) are located at the edge of the opening.

When checking the timing, the timing mark on the flywheel (or flexplate) should be in line with the specified degree mark on the engine rear cover plate opening when the timing light flashes.

The procedure for checking and adjusting the ignition timing with a scope is given in Adjustments of this Part. To check and adjust the timing with a Rotunda 13-07 power timing light proceed as follows:

Initial Ignition Timing—All Except Econoline With 302 CID Engine

1. Clean and mark the timing marks with chalk on white paint.
2. Disconnect the vacuum line (single-diaphragm distributors) or vacuum lines (dual-diaphragm distributor), and plug the disconnected vacuum line(s).
3. Connect a timing light to a terminal of the No. 1 cylinder spark plug wire. Connect tachometer to the engine.
4. Start the engine and reduce the engine idle speed to 600 rpm to be sure that the centrifugal advance is not operating. Adjust the initial ignition timing to specifications by rotating the distributor in the proper direction.
5. Check the centrifugal advance for proper operation. Start the engine and accelerate it to approximately 2000 rpm. If the ignition timing advances, the centrifugal advance mechanism is functioning properly. Note the engine speed when the advance begins and the amount of advance. Stop the engine.
6. Unplug the vacuum line and connect it to the distributor vacuum advance unit (outer diaphragm on dual diaphragm distributors). Start the engine and accelerate it to approximately 2000 rpm. Note the engine speed when the advance begins and the amount of advance. Advance of the ignition timing should begin sooner and advance farther than when checking the centrifugal advance alone. Stop the engine.
7. Check the vacuum retard operation on dual-diaphragm distributors. Connect the intake manifold vacuum line to the inner (retard) diaphragm side of the vacuum advance. Reset the carburetor to normal idle speed. The initial timing should retard to approximately 6 degrees ATDC (See Specifications).
8. If the vacuum advance or vacuum retard (dual-diaphragm distributors) is not functioning properly (refer to steps 6 and 7 above), remove the distributor and check it on a distributor tester. Replace the dual-diaphragm unit if the retard portion is not to specification. The advance portion cannot be calibrated to specifications, if either of the diaphragms are leaking. Unplug and reconnect the distributor vacuum lines. Remove the timing light and tachometer.

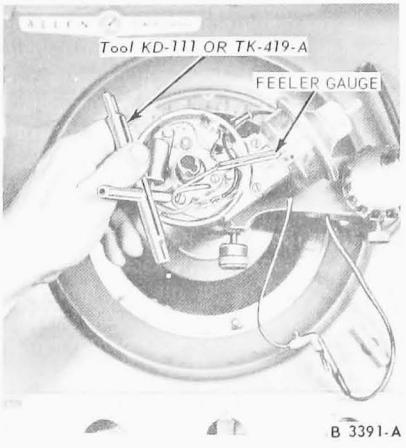

FIG. 16 Adjusting New Breaker Point Gap

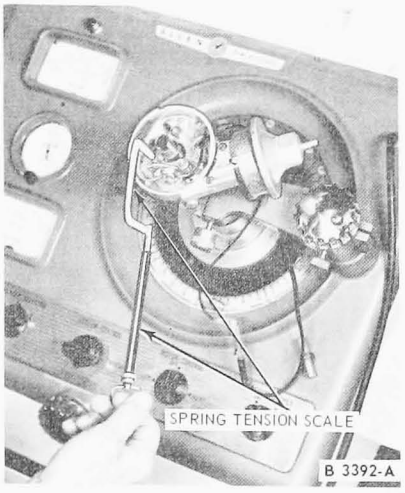

FIG. 17 Checking Breaker Point Spring Tension

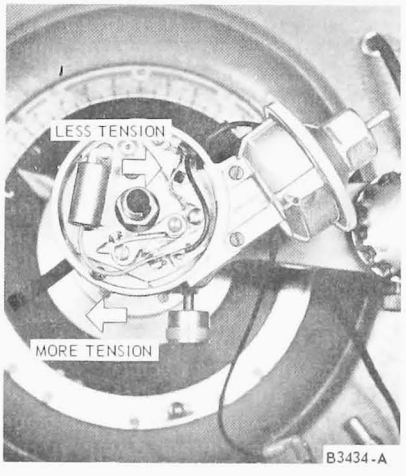

FIG. 18 Adjusting Breaker Point Spring Tension

Econoline-With 302 Engine

1. Working from the underside of the vehicle (Fig. 19), clean and mark the timing marks with chalk or white paint.
2. Connect a timing light to a terminal of the No. 1 cylinder spark plug wire. Connect an engine speed tachometer.
3. Disconnect the vacuum line (single-diaphragm distributors) or vacuum lines (dual-diaphragm distributor), and plug the disconnected vacuum line(s).
4. Start the engine and reduce the engine idle speed to 600 rpm to be sure that the centrifugal advance is not operating. Adjust the initial ignition timing to specifications by

having an assistant rotate the distributor in the proper direction. Tighten the distributor clamp hold-down screw after the correct setting has been obtained.

5. Check the centrifugal advance for proper operation. Start the engine and accelerate it to approximately 2000 rpm. If the ignition timing advances, the centrifugal advance mechanism is functioning properly. Note the engine speed when the advance begins and the amount of advance. Stop the engine.
6. Unplug the vacuum line and connect it to the distributor vacuum advance unit (outer diaphragm on dual diaphragm distributors). Start the engine and accelerate it to approximately 2000 rpm. Note the engine speed when the advance begins and the amount of advance. Advance of the ignition timing should begin sooner and advance farther than when checking the centrifugal advance alone. Stop the engine.
7. Check the vacuum retard operation on dual-diaphragm distributors. Connect the intake manifold vacuum line to the inner (retard) diaphragm side Connect the intake manifold vacuum line of the vacuum advance. Reset the carburetor to normal idle speed. The initial timing should retard to approximately—degrees ATDC (see Specifications). If the vacuum advance or vacuum retard (dual-diaphragm distributors) is not functioning properly (refer to steps 6 and 7 above), remove the distributor and check it on a distributor tester. Replace the dual-diaphragm unit if the retard portion is not to specification, the advance portion cannot be calibrated to specifications, if either of the diaphragms are leaking. Unplug and reconnect the distributor vacuum lines. Remove the timing light and tachometer. 240, and 300 EnginescP-Series Trucks

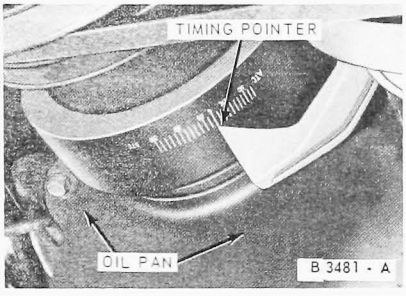

FIG. 19 Engine Timing Marks Econoline With 302 CID Engine

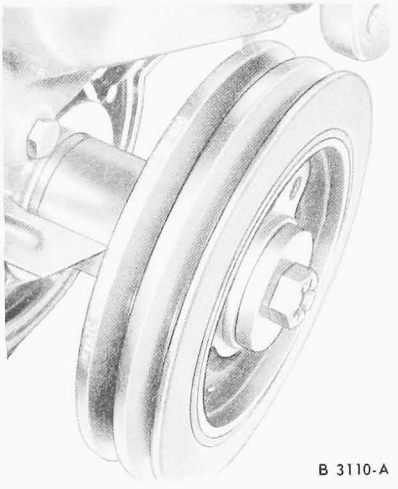

FIG. 20 Typical Engine timing MarkscPulley Mounted

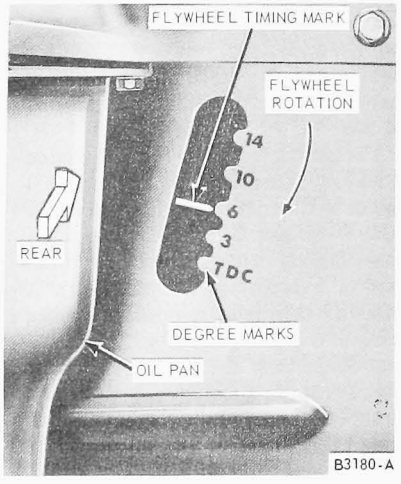

FIG. 21 Engine Timing Marks 240, and 300 Engines P-Series Trucks

REMOVAL AND INSTALLATION

VACUUM HOSES

The basic vacuum hose connections for all distributor systems are shown in Fig. 22.

BREAKER POINTS AND/OR CONDENSER

Removal

1. Remove the distributor cap and the rotor.
2. Disconnect the primary and the condenser wires from the breaker point assembly.
3. Remove the breaker point assembly and condenser attaching screws. Lift the breaker point assembly and condenser out of the distributor.

Installation

1. Place the breaker point assembly and the condenser in position and install the attaching screws. Be sure to place the ground wire in the same location as the original installation.
2. Align and adjust the breaker points.
3. Connect the primary and condenser wires to the breaker points.
4. Install the rotor and the distributor cap.

SPARK PLUG WIRE

When removing the wires from the spark plugs, grasp, twist and pull the moulded cap with the hand only. Do not pull directly on the wire because the wire connection inside the cap may become separated or the boot may be damaged.

The ignition wiring installations are shown in Figs. 23 and 24.

Removal

1. Disconnect the wires from the spark plugs and distributor cap.
2. Pull the wires from the brackets on the valve rocker arm covers and remove the wires.
3. Remove the coil high tension lead.

Installation

1. Insert each wire in the proper socket of the distributor cap. Be sure the wires are forced all the way down

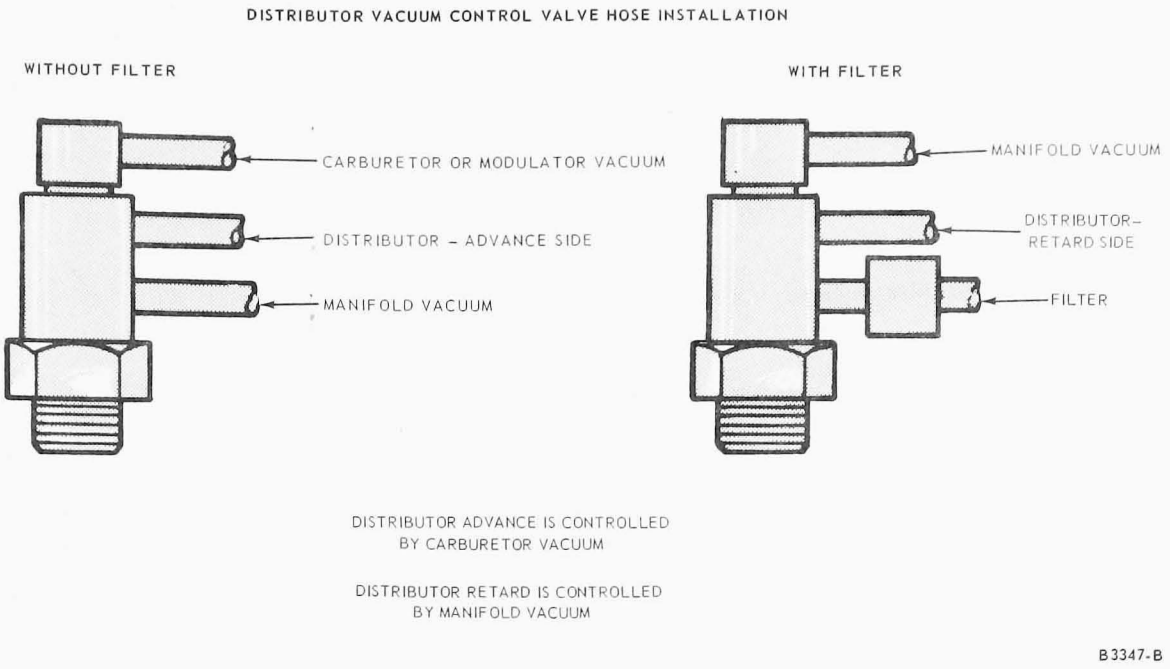

FIG. 22 Distributor Vacuum Hose Connections

into their sockets. The No. 1 socket is identified on the cap. On six-cyliinder engines, install the wires in a clockwise direction (Fig. 23). On V-8 engines except Super Duty, install the wires in a counterclockwise direction in the firing order (1-5-4-2-6-3-7-8) starting at the No. 1 socket. Cylinders are numbered from front to rear; right bank 1-2-3-4, left bank 5-6-7-8.

2. Remove the brackets from the old spark plug wire set and install them on the new set in the same relative position. Install the wires in the brackets on the valve rocker arm covers (Fig. 24). Connect the wires to the proper spark plugs. Install the coil high tension lead. Be sure the No. 7 spark plug wire is positioned in the bracket as shown in Fig. 24 (except Super Duty).
3. On Super Duty engines install the wires in a counterclockwise direction in the firing order (1-5-4-8-6-3-7-2) starting at the No. 1 socket. Note that the wires are positioned in the brackets in exact spark plug order on both banks for Super Duty engines.

SPARK PLUGS

Removal

1. Remove the wires from each spark plug by grasping, twisting and then pulling the moulded cap of the wire by hand only. Do not pull directly on the wire because the wire connection inside the cap may become separated or the weatherseal may be damaged.
2. After loosening each spark plug one or two turns, clean the area around each spark plug port with compressed air, then remove the spark plugs. If working on an Econoline or F-100 equipped with a 240 CID engine and air conditioning, it will be necessary to remove the No. 1 spark plug with special Proto Tool 5026-50. This tool can be purchased locally.

After cleaning, dress the electrodes with a small file to obtain flat parallel surfaces on both the center and side electrodes (Fig. 25). Set the spark plug gap to specifications by bending the ground electrode (Fig. 26). **All spark plugs new or used should have the gap checked and reset as required.**

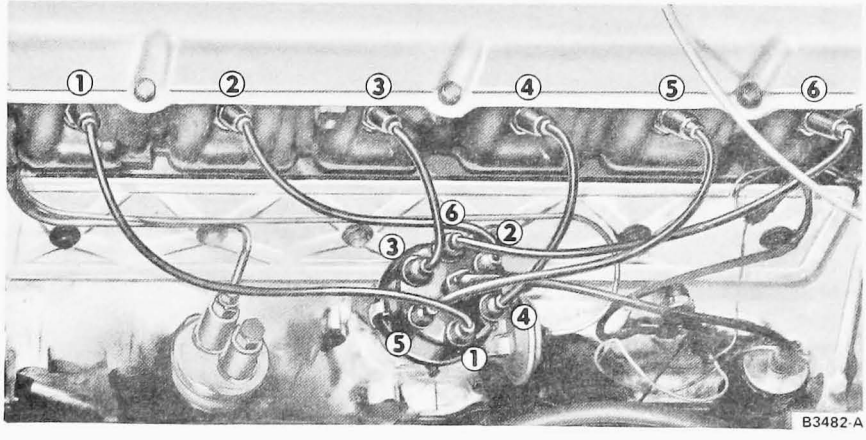

FIG. 23 Typical Ignition Wiring Six-Cylinder Engine

Installation

1. Install the spark plugs and torque each plug to specifications.
2. Connect the spark plug wires.

IGNITION RESISTOR WIRE

Due to its special resistance, under no circumstances should the resistor wire be spliced or replaced by any wire other than the service resistor wire. Do not coil or loop the surplus wire so that the coils or loops contact each other as excessive heat can be generated and cause the main wiring harness to overheat.

IGNITION RESISTANCE WIRE REPLACEMENT—ALL EXCEPT TRANSISTOR IGNITION

1. Disconnect the battery negative (ground) cable.
2. Working in the engine compartment, carefully drill a 1/2 inch hole thru the dash panel in the location shown in Fig. 27. Be careful not to contact the No. 14401 harness with the drill.
3. **Line Haul Only.** Working from inside the cab, locate the multiple (3 socket green) connector behind the lower instrument panel. Connect the bullet terminal end of the new D1HB-12250-AA resistor wire into one of the sockets (Fig. 28).
4. **City Delivery Only.** Working from inside the cab behind the upper instrument panel, remove the nut that secures the No. 16B red-green and the No. 904 green-red stripe wire to the right stud on the junction block (Fig. 3). Secure the eyelet terminal of the new D1EB-12250-AA resistance wire to the stud with the nut that was just removed.
5. Route the new resistance wire along the No. 14401 harness using the existing clips or electricians tape as shown in Figs. 27 and 29.
6. Insert the eyelet terminal of the new resistor wire through the 1/2 inch hole in the dash panel and install the grommet.
7. Remove the nut that secures the No. 16 pink wire to the left junction block stud and remove the pink wire from the stud. Cut the pink wire approximately 1 inch from the harness and tape the end of wire.
8. Attach the new resistor wire to the stud along with any other wires (except pink) that were disconnected and secure with the existing nut.
9. **Line Haul Only.** Cut the defective No. 16A pink resistance wire approximately 1 inch from the ignition switch connector and harness. Insulate the cut ends of wire with tape (Fig. 28).
10. Connect the battery negative (ground) cable to the battery.

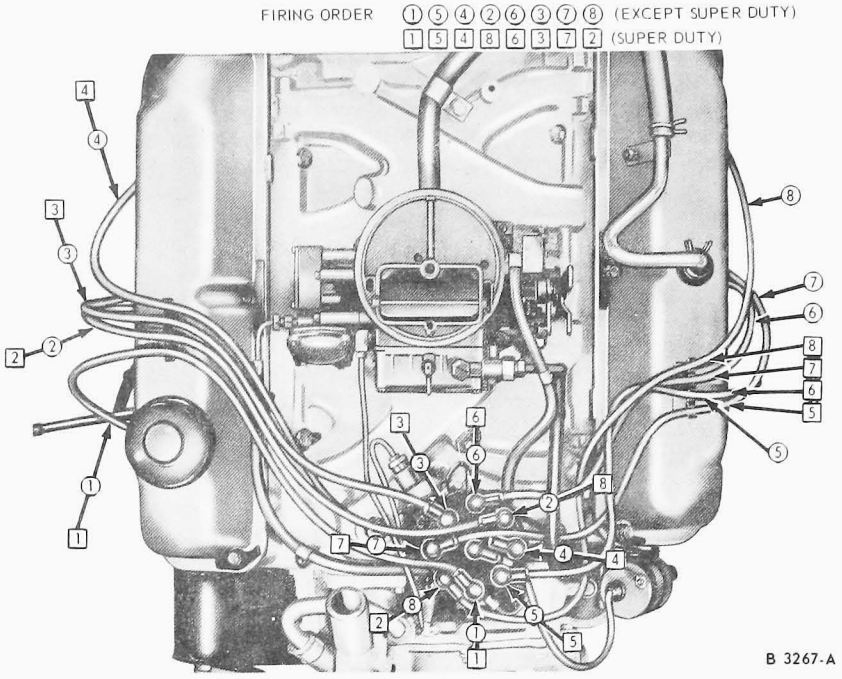

FIG. 24 Typical Ignition Wiring V-8 Engines

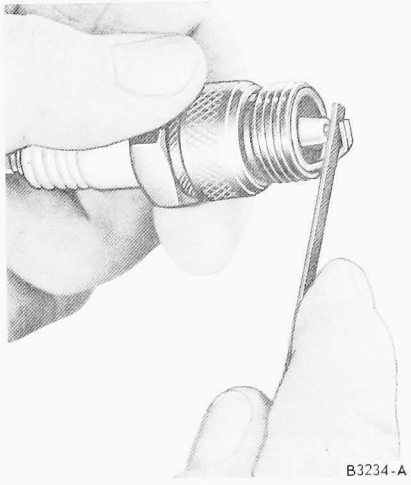

FIG. 25 Filing Spark Plug Electrode

Transistor Ignition—All Series

The resistance wire is connected to the green wire coming from the main disconnect and the green wire coming from the amplifier disconnect. It is connected to these green wires with quick disconnects.

1. Remove the malfunctioning resistance wire (black) from the quick disconnects.
2. Route the new wire along the wiring harness. Connect it to the quick disconnects.
3. Cut the old wire where it enters the wiring harness.

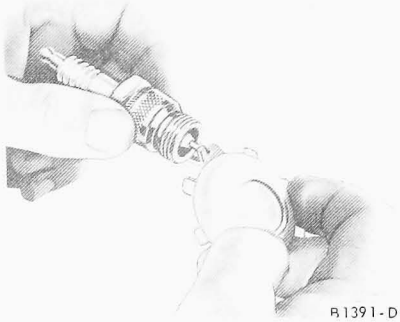

FIG. 26 Checking Spark Plug Gap

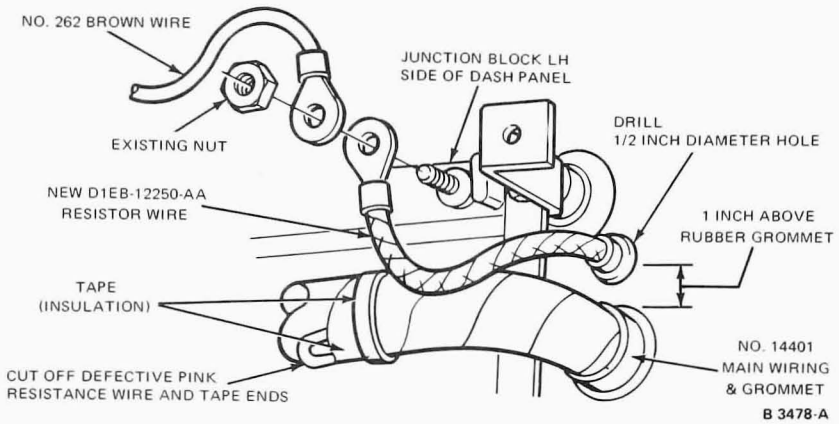

FIG. 27 Resistance Wire Hole Location

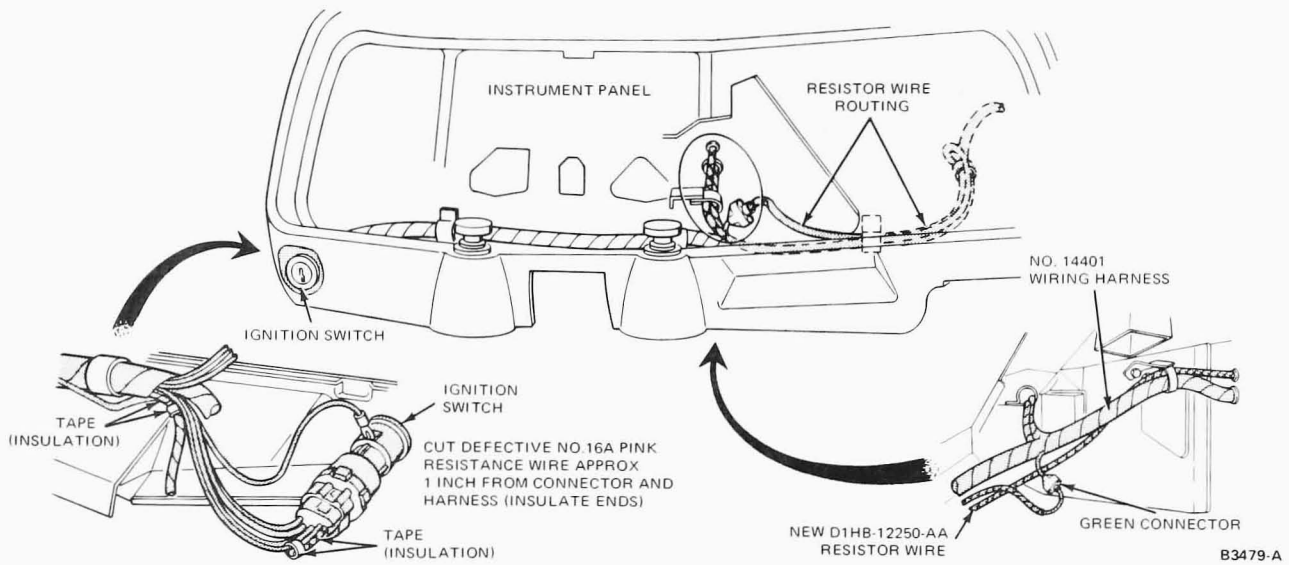

FIG. 28 Resistance Wire Connection Inside of Cab—Line Haul Vehicle

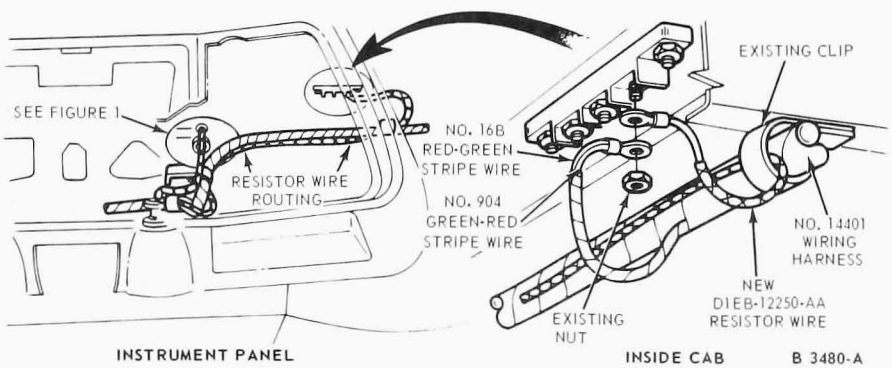

FIG. 29 Resistance Wire Connection Inside of Cab—City Delivery Vehicle

assembly (except the condenser, breaker point assembly, lubricating wick, vacuum diaphragm, distributor base oil seal and electrical wiring) in a mild cleaning solvent or mineral spirits. Do not use a harsh cleaning solution. Wipe all parts that can not be immersed in a solvent with a clean dry cloth.

After foreign deposits have been loosened by soaking, scrub the parts with a soft bristle brush. **Do not use a wire brush, file or other abrasive object.** Dry the parts with compressed air.

Inspect the distributor cam lobes for scoring and signs of wear. If any lobe is scored or worn, replace the cam assembly.

Inspect the breaker plate assembly for signs of distortion. Replace the breaker plate assembly if it is distorted.

The breaker point assembly and condenser (if so equipped) should be replaced whenever the distributor is overhauled.

Inspect all electrical wiring for fraying, breaks, etc., and replace any that are not in good condition.

Check the distributor base for cracks or other damage.

Check the diaphragm housing, bracket, and rod for damage. Test the vacuum hose connections, case, and diaphragm for leakage as explained under Distributor Tests. Replace all damaged parts.

The breaker point assembly consists of the stationary point bracket assembly, breaker arm and the primary wire terminal.

Breaker points should be inspected, cleaned and adjusted as necessary. Breaker points can be cleaned with chloroform and a stiff bristle brush. Replace the breaker point assembly if the contacts are badly burned or excessive metal transfer between the points is evident (Fig. 30). Metal transfer is considered excessive when it equals or exceeds the gap setting.

Distributor Cap

Clean the distributor cap with a soft bristle brush and mild cleaning solvent or mineral spirits. Dry the cap with compressed air. Inspect the cap for cracks, burned contacts. Permanent carbon tracks or dirt or corrosion in the sockets. Replace the cap if it is damaged as above.

Rotor

Clean the rotor with a soft bristle brush and mild cleaning solvent or mineral spirits. Dry the rotor with compressed air. Inspect the rotor for cracks or burning. Replace the rotor if it is cracked or burned.

SECONDARY WIRING

Wipe the wires with a damp cloth and check for fraying, breaks or cracked insulation. Inspect the terminals and weather seals for looseness or corrosion. Replace any wires that are not in good condition.

COIL

Wipe the coil with a damp cloth and check for any cracks or other damage.

CLEANING AND INSPECTION

SPARK PLUGS

Examine the firing ends of the spark plug, noting the type of deposits and the degree of electrode erosion. Refer to Fig. 31 for the various types of spark plug fouling and their causes.

Clean the plugs on a sand blast cleaner, following the manufacturer's instructions. **Do not prolong the use of the abrasive blast as it will erode the insulator and electrodes.**

After cleaning, examine the plug carefully for cracked or broken insulators, badly pitted electrodes, and other signs of malfunction. Replace as required.

DISTRIBUTORS

Soak all parts of the distributor

CONDITION	CAUSED BY
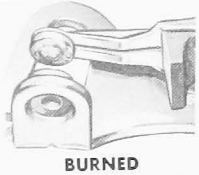 BURNED	Incorrect voltage regulator setting. Radio condenser installed to the distributor side of the coil.
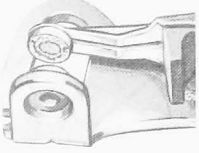 EXCESSIVE METAL TRANSFER OR PITTING	Incorrect alignment. Incorrect voltage regulator setting. Radio condenser installed to the distributor side of the coil. Ignition condenser of improper capacity. Extended operation of the engine at speeds other than normal.

B1443-C

FIG. 30 Breaker Point Inspection

GAP BRIDGED  IDENTIFIED BY DEPOSIT BUILD-UP CLOSING GAP BETWEEN ELECTRODES. CAUSED BY OIL OR CARBON FOULING. IF DEPOSITS ARE NOT EXCESSIVE, THE PLUG CAN BE CLEANED.	**OIL FOULED**  IDENTIFIED BY WET BLACK DEPOSITS ON THE INSULATOR SHELL BORE ELECTRODES CAUSED BY EXCESSIVE OIL ENTERING COMBUSTION CHAMBER THROUGH WORN RINGS AND PISTONS, EXCESSIVE CLEARANCE BETWEEN VALVE GUIDES AND STEMS, OR WORN OR LOOSE BEARINGS. CAN BE CLEANED IF ENGINE IS NOT REPAIRED, USE A HOTTER PLUG.	**CARBON FOULED**  IDENTIFIED BY BLACK, DRY FLUFFY CARBON DEPOSITS ON INSULATOR TIPS, EXPOSED SHELL SURFACES AND ELECTRODES. CAUSED BY TOO COLD A PLUG, WEAK IGNITION, DIRTY AIR CLEANER, DEFECTIVE FUEL PUMP, TOO RICH A FUEL MIXTURE, IMPROPERLY OPERATING HEAT RISER OR EXCESSIVE IDLING. CAN BE CLEANED.
WORN  IDENTIFIED BY SEVERELY ERODED OR WORN ELECTRODES. CAUSED BY NORMAL WEAR. SHOULD BE REPLACED	**NORMAL**  IDENTIFIED BY LIGHT TAN OR GRAY DEPOSITS ON THE FIRING TIP. CAN BE CLEANED.	**LEAD FOULED**  IDENTIFIED BY DARK GRAY, BLACK, YELLOW OR TAN DEPOSITS OR A FUSED GLAZED COATING ON THE INSULATOR TIP. CAUSED BY HIGHLY LEADED GASOLINE. CAN BE CLEANED.
PRE-IGNITION  IDENTIFIED BY MELTED ELECTRODES AND POSSIBLY BLISTERED INSULATOR. METALLIC DEPOSITS ON INSULATOR INDICATE ENGINE DAMAGE. CAUSED BY WRONG TYPE OF FUEL, INCORRECT IGNITION TIMING OR ADVANCE, TOO HOT A PLUG, BURNT VALVES OR ENGINE OVERHEATING. REPLACE THE PLUG.	**OVERHEATING**  IDENTIFIED BY A WHITE OR LIGHT GRAY INSULATOR WITH SMALL BLACK OR GRAY BROWN SPOTS AND WITH BLUISH-BURNT APPEARANCE OF ELECTRODES, CAUSED BY ENGINE OVERHEATING. WRONG TYPE OF FUEL, LOOSE SPARK PLUGS, TOO HOT A PLUG, LOW FUEL PUMP PRESSURE OR INCORRECT IGNITION TIMING. REPLACE THE PLUG.	**FUSED SPOT DEPOSIT**  IDENTIFIED BY MELTED OR SPOTTY DEPOSITS RESEMBLING BUBBLES OR BLISTERS. CAUSED BY SUDDEN ACCELERATION. CAN BE CLEANED.

B3235-A

FIG. 31 Spark Plug Inspection

SPECIAL SERVICE TOOLS

SPECIAL TOOLS

Tool Description	Tool No.
Breaker Point Aligning Tool	KD-111 or TK-419-A
Breaker Point Spring Tension Scale	12151
Distributor Testers	ARE-236 or ARE-1416

Tool Description	Tool No.
Ignition Oscilloscopes	ARE-27-55 or ARE-881
Tach-Dwell Tester	ARE-27-44
Timing Light	13-07

CB1098-A

PART 23-10 Motorcraft Dual Advance Distributors - 6 and 8-Cylinder

Applies to All Models

COMPONENT INDEX	Page	COMPONENT INDEX	Page
BREAKER PLATE AND SUBPLATE		SPECIFICATIONS	10-05
Installation	10-03		
Removal	10-03	DUAL DIAPHRAGM ADVANCE	
BREAKER POINTS		Description	10-01
Installation	10-03		
Removal	10-03	IGNITION SYSTEM	
CAM AND CENTRIFUGAL		Description	10-01
ADVANCE MECHANISM		SINGLE DIAPHRAGM VACUUM	
Installation	10-03	ADVANCE	
Removal	10-03	Description	10-01
DISTRIBUTOR		VACUUM ADVANCE UNIT	
Installation	10-04	Installation	10-03
Removal	10-04	Removal	10-03

DESCRIPTION

IGNITION SYSTEM

The 1973 ignition systems continue to include all components required for the Imco exhaust emission control system.

All distributors are equipped with both vacuum and centrifugal advance units. The vacuum advance governs the ignition timing (spark advance) during low engine speeds (rpm) or low engine loadings. The centrifugal advance, in combination with the vacuum advance, controls the ignition timing at higher engine speeds or heavy engine loadings to provide the correct ignition timing for maximum engine performance. A dual diaphragm vacuum advance is used on some engines to provide additional ignition timing retard during engine idle operation.

The distributor cam on six cylinder engines rotate in a clockwise direction. To advance the timing, the distributor should be rotated in a counterclockwise direction. The distributor cam on V-8 engines rotate in a counterclockwise direction. To advance the timing, the distributor should be rotated in a clockwise direction.

VACUUM SINGLE ADVANCE UNIT

The distributor advance systems are independently operated. The centrifugal advance mechanism (Fig. 1), located below the stationary subplate assembly, has centrifugal weights that move inward or outward with changes in engine speed. As engine speed increases the centrifugal weights move ahead with respect to the distributor drive shaft. The rate of advance is controlled by calibrated weight springs.

The vacuum single advance has a spring loaded diaphragm connected to the breaker plate assembly. The diaphragm is moved against the spring pressure by vacuum pressures. When the vacuum increases, the diaphragm causes the movable breaker plate to pivot on the stationary sub-plate. The breaker point rubbing block, which is positioned on the opposite side of the cam from the pivot pin, then moves opposite to distributor rotation and advances the spark timing. As the movable breaker plate is rotated from retard position to full-advance position, the breaker point dwell will remain constant due to the breaker point rubbing block and the cam rotating on the same axes of the breaker plate and sub-plate.

DISTRIBUTOR DUAL-DIAPHRAGM VACUUM ADVANCE

The centrifugal advance unit is the same on dual-diaphragm vacuum advance distributors as on single diaphragm vacuum advance distributors. The dual-diaphragm unit consists of two independently operating diaphragms (Fig. 2). The outer (primary) diaphragm utilizes carburetor vacuum to advance ignition timing. The inner (secondary) diaphragm is actuated by intake manifold vacuum to provide additional ignition timing retard during periods of closed throttle idle, thereby assisting in the reduction of exhaust system hydrocarbon emission.

The outer diaphragm is coupled to the movable breaker plate much the same way as in single-diaphragm distributors. An increase in vacuum pressure moves the diaphragm against the advance diaphragm spring tension, causing the movable breaker plate to pivot opposite to distributor rotation. Thus, ignition timing is advanced, and this is calculated to occur during normal road-load operation, but not during deceleration or idle.

When intake manifold vacuum is applied to the inner diaphragm (retard), it moves inward toward the distributor (Fig. 2). This allows the advance diaphragm spring to move the advance diaphragm, causing the movable breaker plate to pivot in the same direction as distributor rotation. This retard of the ignition timing automatically occurs during engine idle or deceleration except when a distributor modulator is installed in the vacuum supply line.

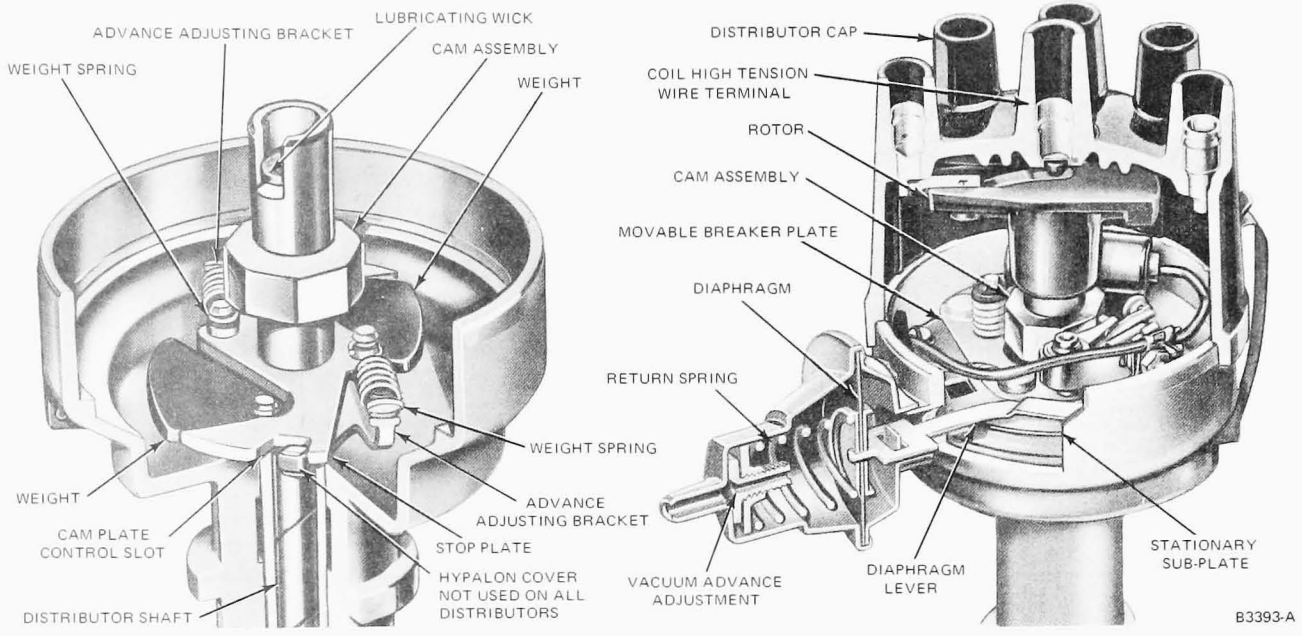

FIG. 1 Advance Mechanisms—Dual Advance Distributor With Single Diaphragm

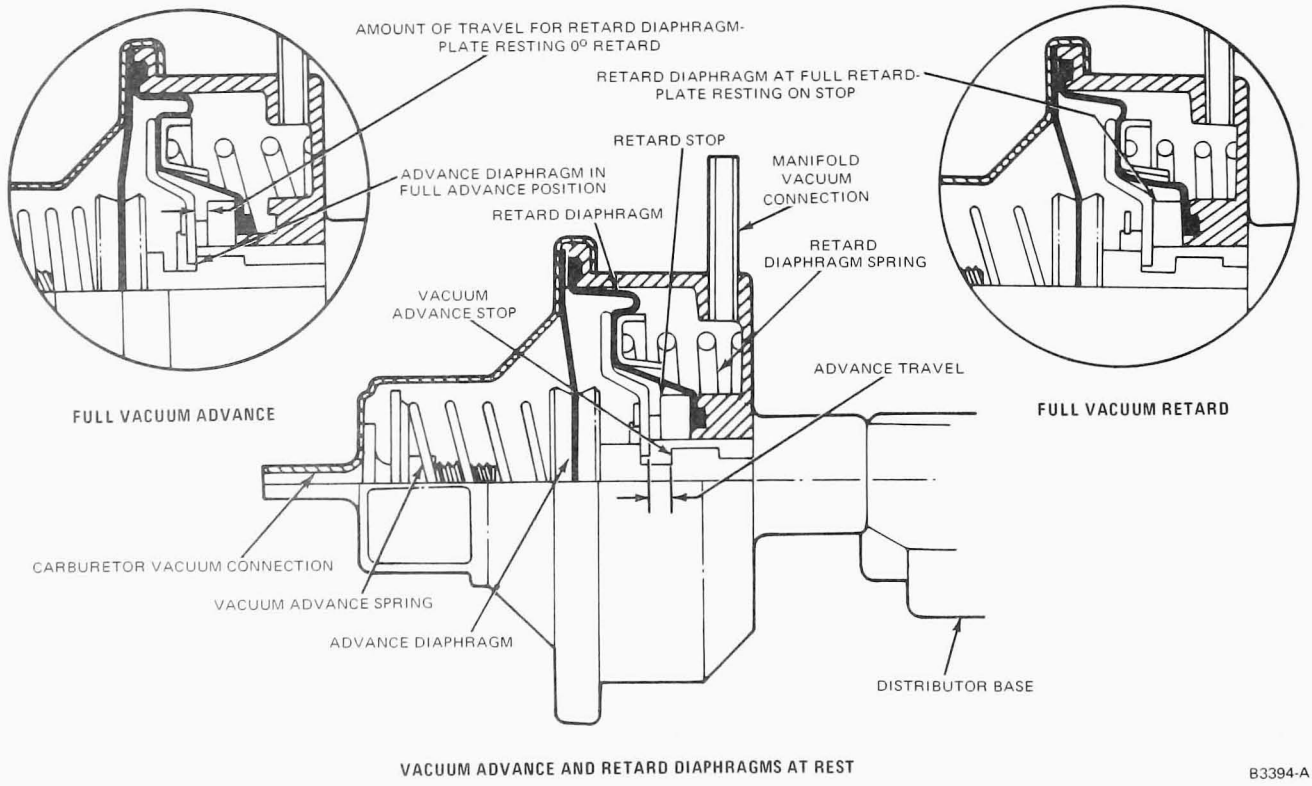

FIG. 2 Dual-Diaphragm Vacuum Advance Mechanism

REMOVAL AND INSTALLATION

BREAKER POINTS AND/OR CONDENSER

Removal and installation procedures for breaker points and condensers are covered in Part 23-01.

VACUUM ADVANCE UNIT—SINGLE AND DUAL DIAPHRAGM

Removal

1. Remove the distributor cap (dust cover, transistor ignition only) and rotor.
2. Disconnect the vacuum line(s).
3. Remove the spring clip that secures the diaphragm link to the movable breaker plate.
4. Remove the diaphragm unit attaching screws, and carefully remove the unit.

Installation

1. Position the diaphragm unit on the distributor and hook the diaphragm link in position.
2. Install the spring clip that secures the diaphragm link to the movable breaker plate. Install the diaphragm unit attaching screws.
3. Connect the vacuum line(s).
4. Install the dust cover (transistor ignition only), rotor and the distributor cap.

BREAKER PLATE AND SUB-PLATE

Refer to Figs. 3 and 4 for the correct location of parts.

Removal

1. Remove the distributor cap and rotor (if working on transistor ignition, remove the dust cover), radio supression cover (if so equipped).
2. Remove the breaker point assembly and the condenser. Remove the vacuum diaphragm.
3. Working from the inside of the distributor, pull the primary wire through the opening out of the distributor.
4. Remove the sub-plate attaching screws and lift the assembly from the distributor.

Installation

1. Place the breaker plate assembly in position in the distributor.
2. Install the sub-plate hold-down screws (the ground wire should be under the sub-plate hold-down screw from which it was removed) (Figs. 3 and 4).
3. Insert the primary wire in the distributor. Install the breaker points and the condenser. Connect the primary wire and the condenser wire to the breaker point terminal. Install the vacuum diaphragm.
4. Install the dust cap (transistor ignition only), rotor and the distributor cap.

CAM AND CENTRIFUGAL ADVANCE WEIGHTS

Removal

1. Remove the breaker plate and sub-plate from the distributor.
2. **Mark one of the distributor weight springs and its brackets. Also mark one of the weights and its pivot pin.**
3. Carefully unhook and remove the weight springs.
4. Lift the lubricating wick from the cam assembly. Remove the cam assembly retainer and lift the cam assembly off the distributor shaft. Remove the thrust washer.
5. Remove the weight retainers and lift the weights out of the distributor.

Installation

1. If the weights were removed, fill the grooves in the weight pivot pins with distributor cam lubricant (C4AZ-19D530-A).

Position the weights in the distributor **(the marked weight is placed on the marked pivot pin)** and install the weight retainers.

2. Place the thrust washer on the shaft.
3. Fill the grooves in the upper portion of the distributor shaft with distributor cam lubricant (C4AZ-19D530-A).
4. Install the cam assembly. **Be sure that the marked spring bracket on the cam assembly is near the marked spring bracket on the stop plate.**

If a new cam assembly is being installed, make sure that the cam is installed with the hypalon covered stop in the correct cam plate control slot. Some distributor stops will not be covered with the hypalon covering. The centrifugal advance range determines whether or not a hypalon cover is required. This can be done by measuring the length of the slot used on the old cam and by using the corresponding slot on the new cam. Some of the cams will have the size of the slot in degrees stamped near the slot. If the wrong slot is used, an incorrect maximum advance will be obtained.

Place a light film of distributor cam lubricant (C4AZ-19D530-A) on the distributor cam lobes. Install the retainer and the wick. Oil the wick with SAE-10W engine oil.

5. Install the weight springs. **Be sure that the marked spring is attached to the marked spring brackets.**
6. Install the plate assembly.
7. Install the diaphragm unit.

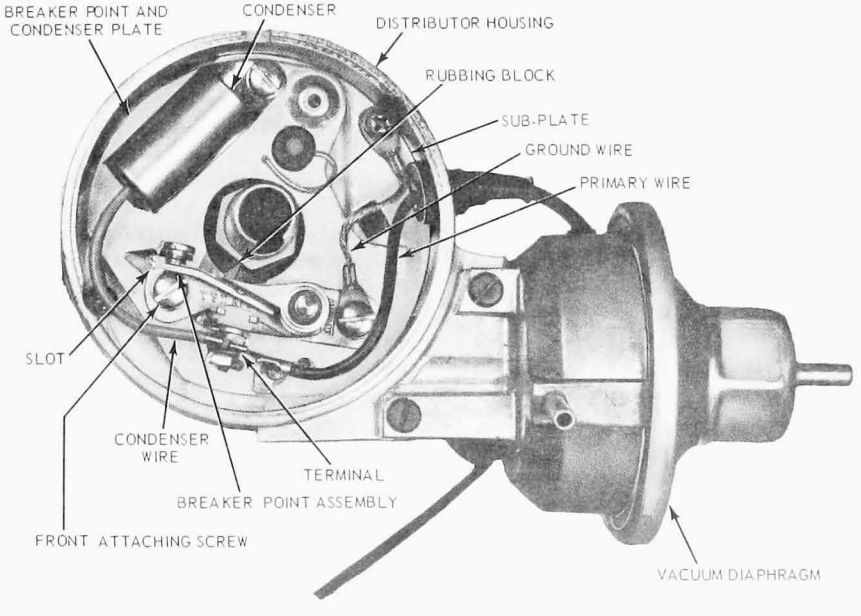

FIG. 3 Breaker Plate Installed—6-Cylinder Engine Dual Diaphragm Distributor

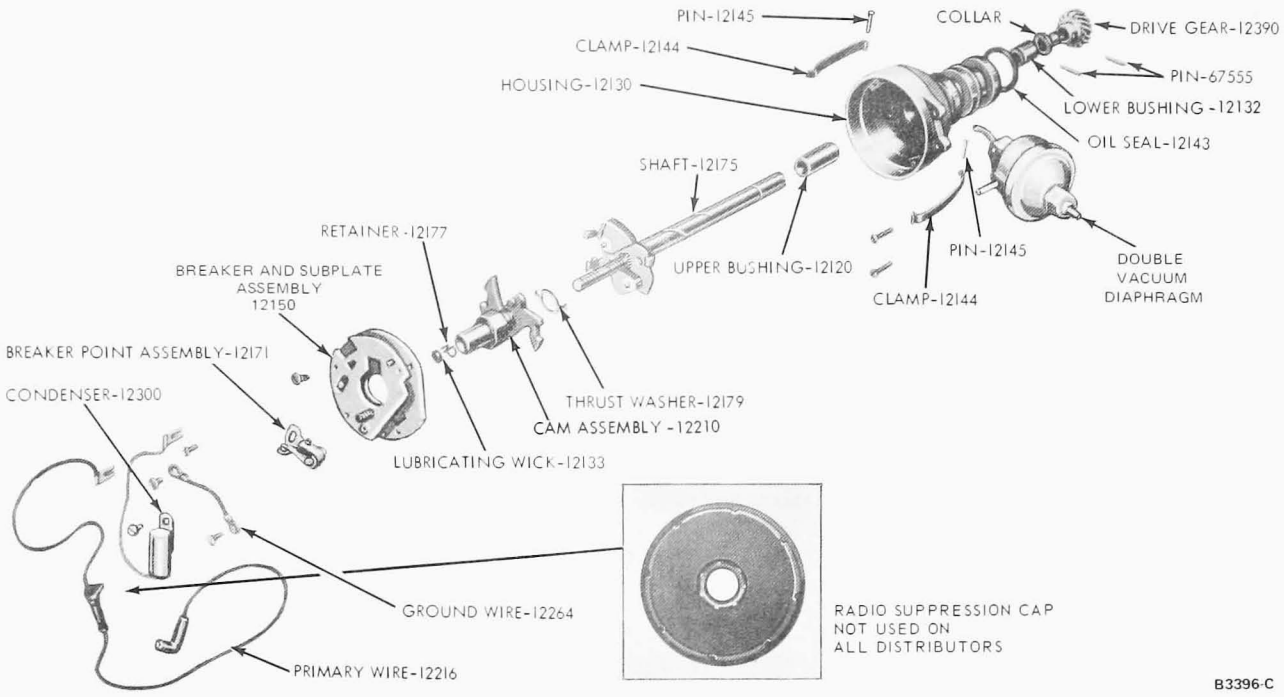

FIG. 4 Breaker Plate Installed—V-8 Engine single Diaphragm Distributor

8. Install the primary wire in the distributor. Connect the primary and condenser wires to the breaker point terminal.
9. Adjust the breaker point gap or dwell as required.

DISTRIBUTOR

Removal

1. Remove the air cleaner. Disconnect the primary wire from the coil.

Disconnect the vacuum advance line(s) at the distributor. Remove the distributor cap.

2. Scribe a mark on the distributor body and the cylinder block indicating the position of the body in the block, and scribe another mark on the distributor body indicating the position of the rotor. These marks can be used as guides when installing the distributor in a correctly timed engine.
3. Remove the distributor hold-down bolt and clamp. Lift the distributor out of the block.

Do not rotate the crankshaft while the distributor is removed, or it will be necessary to time the engine.

Installation

1. If the crankshaft was rotated while the distributor was removed from the engine, it will be necessary to time the engine. Rotate the crankshaft until No. 1 piston is on TDC after the compression stroke. Align the TDC mark on the timing pointer with the timing pin on the crankshaft damper. Position the distributor in the block with the rotor at the No. 1 firing position.

Make sure the oil pump intermediate shaft properly engages the distributor shaft. It may be necessary to crank the engine with the starter, after the distributor drive gear is partially engaged to engage the oil pump intermediate shaft.

Install, but do not tighten, the retaining clamp and bolt. Rotate the distributor to advance the timing to a point where the breaker points are just starting to open. Tighten the clamp.

2. If the crankshaft has not been moved, position the distributor in the block with the rotor aligned with the mark previously scribed on the distributor body and the marks on the distributor body and cylinder block in alignment.
3. Install the distributor cap.
4. Connect the primary wire to the coil.
5. Check the ignition timing with a timing light and adjust to specifications. Connect the vacuum line, and check the advance with the timing light when the engine is accelerated.
6. Install the air cleaner.

SPECIFICATIONS

CONVENTIONAL IGNITION SYSTEM – COIL CONDENSER AND PRIMARY CIRCUIT RESISTOR SPECIFICATIONS

Coil		Primary Circuit Resistor	CONDENSER		
			Capacity (Micro-farads)	Minimum Leakage (Megohms)	Maximum Series Resistance (Ohms)
Primary Resistance (Ohms)	1.40–1.54 (75°F)	Resistance (Ohms)			
Secondary Resistance (Ohms)	7600–8800 (75°F)		0.21–0.25	10	1
Amperage Draw (Engine Stopped)	4.5	1.30–1.40 (75°F)			
Amperage Draw (Engine Idling)	2.5				

DISTRIBUTOR GENERAL INFORMATION

Engine	Point Voltage Drop (Max)	Rotor Air Gap Voltage Drop (Max)	Breaker Arm Spring Tension (Oz)	Distributor Shaft End Play ①	Gear Location ②
240	0.25	7.5 KV	17-21	0.003-0.010	N.A.
300					
302				0.024-0.035	4.031-4.038
330 (MD)				0.022-0.032	3.071-3.080
330 (HD)				0.025-0.035	
360				0.022-0.032	3.071-3.078
361				0.025-0.035	3.071-3.080
390				0.022-0.032	3.071-3.078
391				0.025-0.035	3.071-3.080
401				0.022-0.030	5.111-5.116
477					
534					

① Measured with distributor removed
② Distance from bottom of mounting flange to bottom of gear.

TRANSISTOR IGNITION SYSTEM

COIL			
Primary Resistance (Ohms)	0.226–0.251 (75°F)	Emitter (Ohms)	0.31–0.35 (75°F)
Secondary Resistance (Ohms)	4900–5680 (75°F)	Collector (Ohms)	0.41–0.45 (75°F)
Amperage Draw (Engine Cranking)	4.0	Base (Ohms)	7.1–7.9 (75°F)
Amperage Draw (Engine Idling)	5.0		

CB 1110-A

PART 23-15 Distributor Controls

COMPONENT INDEX	Page	COMPONENT INDEX	Page
PORTED VACUUM SWITCH VALVE—PVS VALVE.		Installation	15-2
General Information	15-1	Removal	15-1
		Test	15-1

DESCRIPTION

GENERAL INFORMATION

This Part covers the various devices used to supplement the vacuum diaphragm controls installed on all current passenger car distributors. All of the devices regulate the distributor by changing the vacuum forces applied to the distributor diaphragm(s). These devices are used because of exhaust emission control requirements.

PORTED VACUUM SWITCH VALVE—PVS VALVE

The PVS valve (coolant temperature sensing valve, Figs. 1 and 2) is incorporated in the distributor vacuum advance supply line of certain engines to provide advanced ignition timing under prolonged idling conditions. The valve is installed in the coolant outlet elbow to sense engine coolant temperatures. Normally, the valve connects two ports, normal source vacuum at the carburetor and the distributor port. During periods of prolonged idle, should the engine temperature rise above normal, the valve closes the normal source vacuum port and connects the distributor port to the alternate source vacuum port. The advanced ignition timing causes an immediate increase in engine speed, which will continue until the engine temperature returns to normal.

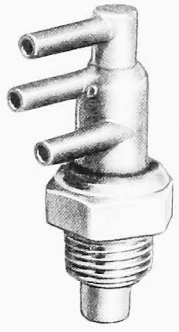

B 3104-A

FIG. 1 Ported Vacuum Switch PVS Valve

PORTED VACUUM SWITCH VALVE TEST

The Ported Vacuum Switch Valve is shown in Figs. 1 and 2.

1. Make certain that all vacuum hoses are properly routed and installed.
2. Attach a tachometer to the engine.
3. Bring the engine up to operating temperature and be certain that the choke plate is in the vertical position. **Engine must not be overheated.**
4. Note the engine idle rpm with transmission in neutral and carburetor throttle in the curb idle position.
5. Disconnect the vacuum hose from the intake manifold at the temperature sensing valve and plug or clamp the hose.
6. Note engine idle rpm with the hose disconnected. If no change in idle speed, the valve is acceptable up to this point. If there is drop in idle speed of 100 rpm or more, the valve should be replaced.
7. Install vacuum line on manifold fitting; then verify that the all season cooling mixture is up to specifications, and that the correct radiator cap is installed.
8. Cover the radiator sufficiently to induce a high temperature condition.
9. Continue to run the engine until the red high temperature light comes on or the temperature indicated on the temperature gauge is at the high end of the band indicating an above normal temperature.

If the engine idle speed has by this time increased 100 rpm or more, the temperature sensing valve is satisfactory. If not, it should be replaced. Do not overheat the engine.

REMOVAL AND INSTALLATION

PORTED VACUUM SWITCH VALVE—PVS VALVE

Removal

1. Drain approximately one gallon of coolant from the radiator into a container.
2. Disconnect and tag the three vacuum hoses from the PVS valve.
3. Turn the PVS valve counterclockwise out of the thermostat housing.

Installation

1. Install the PVS valve in the thermostat housing.
2. Connect the three hoses to their respective ports.
3. Fill the cooling system with the specified coolant.

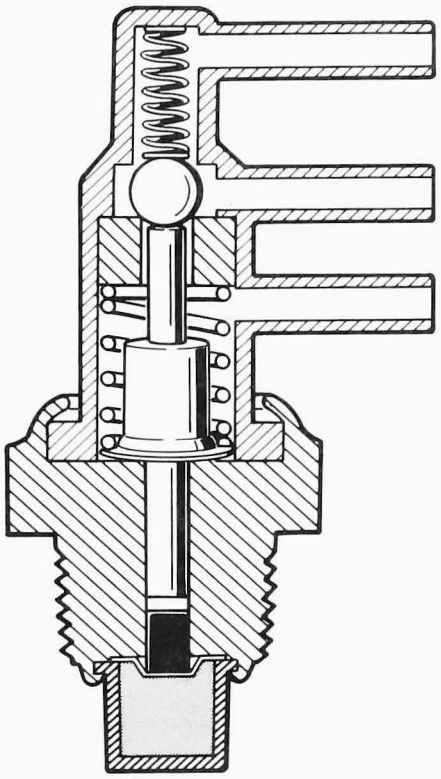

B3346 - A

FIG. 2 Ported Vacuum Switch Valve—PVS Valve Sectional View

PART 23-16 Motorcraft Dual Advance Distributors With Vacuum Governor Control

Applies to 330, 361, 391 Engines with Vacuum Governors

COMPONENT INDEX	Page	COMPONENT INDEX	Page
BREAKER PLATE AND SUBPLATE		DISTRIBUTOR	
Installation	16-03	Description	16-01
Removal	16-03	Installation	16-04
		Removal	16-04
BREAKER POINTS			
Installation	16-03	SPECIFICATIONS	16-05
Removal	16-03		
CAM AND CENTRIFUGAL ADVANCE MECHANISM		VACUUM ADVANCE UNIT	
Installation	16-04	Installation	16-03
Removal	16-03	Removal	16-03

DESCRIPTION AND OPERATION

This dual advance distributor has two independently operated spark advance systems. A unique centrifugal spark advance and throttle governor control mechanism is located below the stationary sub-plate assembly (Fig. 1). A vacuum operated spark advance control diaphragm is located on the side of the distributor base (Fig. 1). Except for the built-in throttle governor valve mechanism and tachometer drive gearing, this distributor is similar in all respects to the dual-advance distributor described in Part 23-10.

The throttle governor operating principles are covered in Part 23-20, Governors.

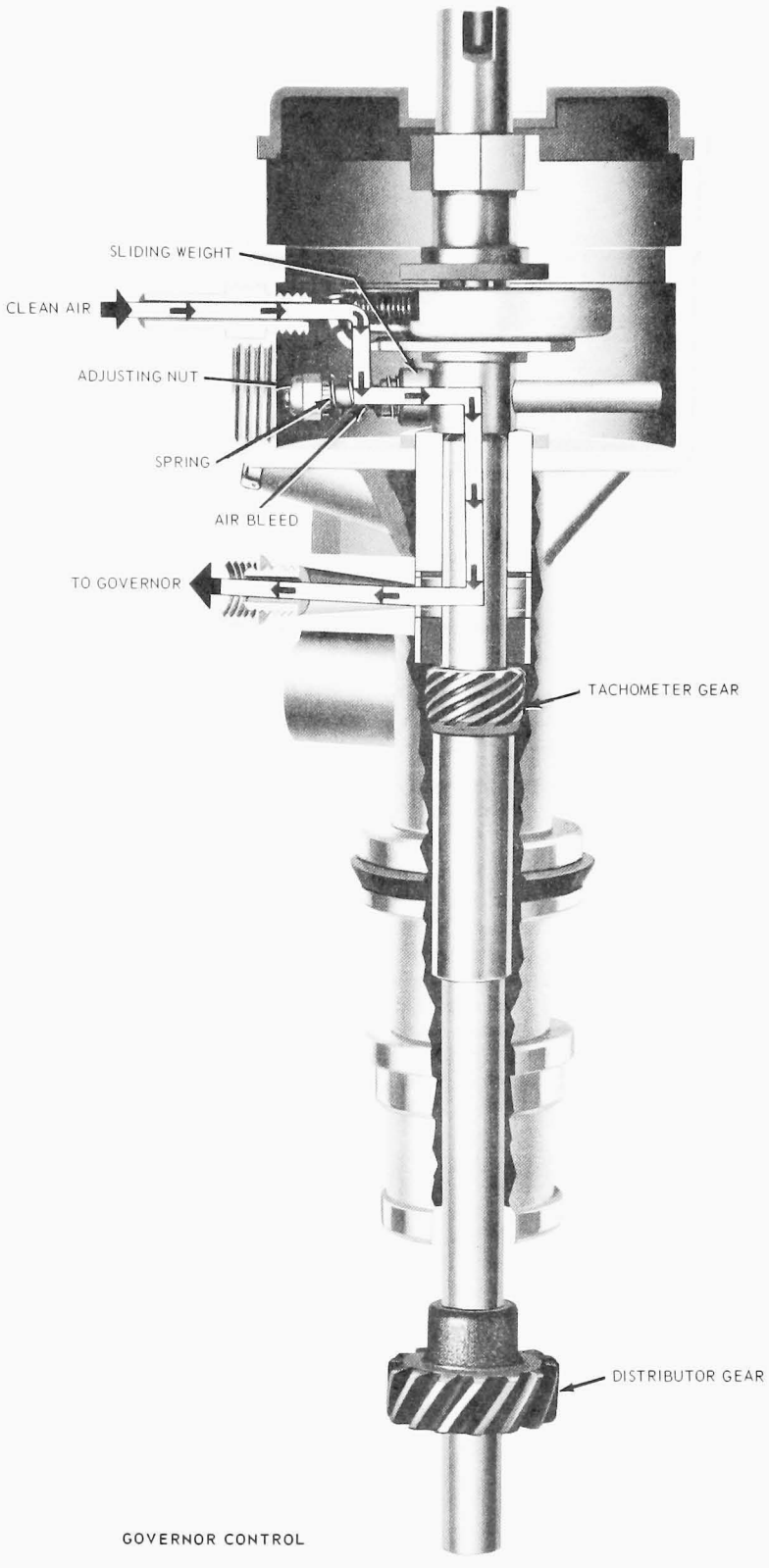

B 3292-B

FIG. 1 Advance and Governor Control Mechanisms

DIAGNOSIS AND TESTING

DISTRIBUTOR

Testing instructions for this distributor are given in Part 23-01.

GOVERNOR CONTROL

Testing instructions for the governor control mechanism contained in this distributor are given in Part 23-20.

ADJUSTMENTS

DISTRIBUTOR

Adjustment instructions for this distributor are given in Part 23-01.

GOVERNOR CONTROL

Instructions for adjusting the vacuum governor control mechanism in this distributor are given in Part 23-20.

REMOVAL AND INSTALLATION

BREAKER POINT AND/OR CONDENSER

The replacement procedures for these units are covered in Part 23-01.

VACUUM DIAPHRAGM

Removal

1. Remove the distributor cap, rotor and dust cover.
2. Remove the vacuum line and fitting from the diaphragm.
3. Remove the spring clip that secures the diaphragm link to the movable breaker plate.
4. Remove the diaphragm attaching screws and slide the diaphragm (Fig. 2) out of the distributor.

Installation

1. Slide the diaphragm into the opening in the distributor and place the link in its position.
2. Install the spring clip that secures the diaphragm link to the movable breaker plate.
3. Install the diaphragm vacuum line and fitting.
4. Install the dust cover, rotor and distributor cap.

BREAKER PLATE AND/OR SUB-PLATE

Removal

1. Remove the distributor cap, rotor and dust cover.
2. Remove the breaker point assembly, condenser (if so equipped) and vacuum diaphragm (Fig. 2).
3. Disconnect the primary wire at the coil (conventional ignition system) or at the quick disconnect (transistor ignition system). Working from inside the distributor, pull the primary wire through the opening in the distributor.
4. Remove the spring clip, flat washer and spring washer attaching the breaker plate to the sub-plate.
5. Remove the sub-plate hold-down screws and lift both plates out of the distributor.

Installation

1. Place the breaker plate in position on the sub-plate.
2. Install the spring washer, flat washer and spring clip that attach the breaker plate to the sub-plate.
3. Install the sub-plate hold-down screws (the ground wire should be under the screw near the primary wire opening in the distributor).
4. Working from inside the distributor, push the primary wire through the opening in the distributor. Connect the primary wire to the coil (conventional ignition system) or the quick disconnect (transistor ignition system).
5. Install the breaker point assembly, condenser (if so equipped) and vacuum diaphragm.
6. Align and adjust the breaker points (Part 23-01).
7. Install the dust cover, rotor and distributor cap.

CAM AND CENTRIFUGAL ADVANCE MECHANISM

Removal

1. Remove the distributor cap, rotor and dust cover.
2. Disconnect the primary wire at the coil (conventional ignition system) or the quick disconnect (transistor ignition system). Working from inside the distributor, pull the primary wire through the opening in the distributor.

3. Remove the sub-plate hold-down screws and lift the breaker plate and sub-plate assembly from the distributor.
4. Lift the lubricating wick from the cam assembly. Remove the cam assembly retainer and lift the cam assembly and thrust washer off the distributor shaft.
5. **Mark one of the distributor weight springs. Place a mark on the bracket, weight and weight pivot that are assembled to the marked spring.**
6. Carefully unhook and remove the weight springs.
7. Lift the weights out of the distributor.

Installation

1. Fill the grooves in the weight pivot pin with distributor cam lubricant (C4AZ-19D530-A).
2. Position the weights in the distributor **(the marked weight is placed on the marked pivot pin).**
3. Install the weight springs (the marked spring is connected to the marked weight and bracket).
4. Place the thrust washer on the shaft.
5. Fill the grooves in the upper portion of the distributor shaft with distributor cam lubricant.
6. Install the cam assembly. Be sure that the slots in the cam engage the pins on the weights.
7. Install the cam retainer. Place a light film of distributor cam lubricant on the cam lobes. Install the wick in the cam assembly and oil the wick with SAE 10W engine oil.
8. Install the breaker plate and sub-plate assembly.
9. Working from inside the distributor, push the primary wire through the opening in the distributor. Connect the primary wire to the coil (conventional ignition system) or the quick disconnect (transistor ignition system).
10. Install the dust cover, rotor and distributor cap.

DISTRIBUTOR ASSEMBLY

Removal

1. Remove the air cleaner. Disconnect the primary wire at the coil (conventional ignition system) or the quick disconnect (transistor ignition system). Disconnect the vacuum advance rubber line, the governor air lines and the tachometer cable at the distributor, and remove the distributor cap.
2. Scribe a mark on the distributor body and cylinder block indicating the position of the body in the block, and scribe another mark on the distributor body indicating the position of the rotor. These marks can be used as guides when installing the distributor in a correctly timed engine.
3. Remove the distributor hold-down capscrew and clamp, then lift the distributor out of the block.

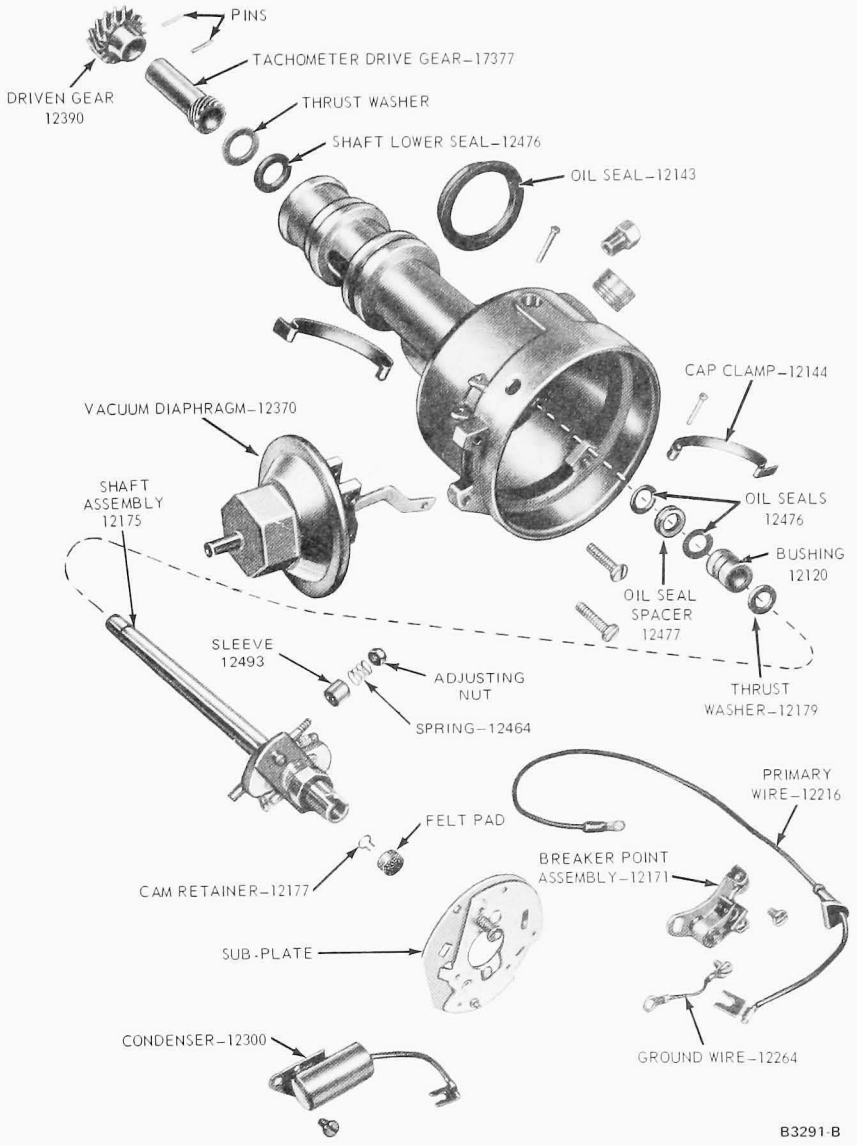

FIG. 2 Distributor Disassembled

Installation

1. If the crankshaft was rotated while the distributor was removed from the engine, it will be necessary to time the engine. Rotate the crankshaft until No. 1 piston is on TDC (after the compression stroke). Align the TDC mark on the crankshaft damper with the timing pointer. Position the distributor in the block with the rotor at the No. 1 firing position.

Make sure the oil pump intermediate shaft properly engages the distributor shaft. It may be necessary to crank the engine with the starter, after the distributor drive gear is partially engaged, in order to engage the oil pump intermediate shaft.

Install, but do not tighten, the retaining clamp and screw. Rotate the distributor body counterclockwise until the breaker points are just starting to open. Tighten the retaining clamp.

2. If the crankshaft has not been rotated, position the distributor in the block with rotor aligned with the mark previously scribed on the distributor body, and the marks on the distributor body and cylinder block in alignment. Install the retaining clamp.

3. Install the distributor cap.
4. Connect the primary wire to the coil (conventional ignition system) or the quick disconnect (transistor ignition system).
5. Connect the governor air lines and the tachometer cable to the distributor.
6. Install the air cleaner. Start the engine and check the ignition timing and adjust it if necessary (Part 23-01). Connect the vacuum line, and check the advance with the timing light when the engine is accelerated (Part 23-01).

SPECIFICATIONS

DISTRIBUTOR GENERAL INFORMATION

Engine	Point Voltage Drop (Max)	Rotor Air Gap Voltage Drop (Max)	Breaker Arm Spring Tension (Oz)	Distributor Shaft End Play (1)	Gear Location (2)
330 (HD)				0.025–0.035	3.071–3.080
361				0.025–0.035	3.071–3.080
391	0.25	7.5 KV	17–21	0.025–0.035	3.071–3.080

(1) Measured with distributor removed.
(2) Distance from bottom of mounting flange to bottom of gear.

CONVENTIONAL IGNITION SYSTEM – COIL CONDENSER AND PRIMARY CIRCUIT RESISTOR SPECIFICATIONS

COIL		Primary Circuit Resistor	CONDENSER		
			Capacity (Micro-farads)	Minimum Leakage (Megohms)	Maximum Series Resistance (Ohms)
Primary Resistance (Ohms)	1.40–1.54 (75° F)	Resistance (Ohms)			
Secondary Resistance (Ohms)	7600–8800 (75° F)		0.21–0.25	10	1
Amperage Draw (Engine Stopped)	4.5	1.30–1.40 (75° F)			
Amperage Draw (Engine Idling)	2.5				

TRANSISTOR IGNITION SYSTEM

Coil			
Primary Resistance (Ohms)	0.226–0.251 (75° F)	Emitter (Ohms)	0.31–0.35 (75° F)
Secondary Resistance (Ohms)	4900–5680 (75° F)	Collector (Ohms)	0.41–0.45 (75° F)
Amperage Draw (Engine Cranking)	4.0	Base (Ohms)	7.1–7.9 (75° F)
Amperage Draw (Engine Idling)	5.0		

CB 1079-B

PART 23-20 Governors

COMPONENT INDEX	Page
MECHANICAL GOVERNOR – APPLIES TO 330, 361, 390, 391, 401, 477 and 534 CID ENGINES	
Adjustment	20-05
Description	20-02
Installation	20-06
Removal	20-06
VACUUM GOVERNOR – APPLIES TO 330, 361, 390 and 391 CID ENGINES	
Adjustment	20-05
Assembly	20-06
Description	20-02
Disassembly	20-06
Installation	20-06
Removal	20-06
VELOCITY GOVERNOR – APPLIES TO 240, 300, 360 and 390 CID ENGINES	
Adjustment	20-04
Description	20-01
Installation	20-06
Removal	20-06

DESCRIPTION AND OPERATION

VELOCITY GOVERNORS

Conventional Velocity Governor

The velocity governor (Fig. 1) is a single unit mounted between the carburetor and the intake manifold. There is no provision for repair of this governor. It should be replaced when damaged.

The governor is operated by a combination of manifold vacuum and the air flow past the governor valves. The governor throttle valves are offset in the throttle bore so that the combined force of manifold vacuum and the fuel air flow through the bores has greater effect on the larger, upstream area of the valves. This forces the throttle valves to move toward the closed position restricting the fuelair flow. The closing action of the throttle valves is opposed by the control spring. The control spring is attached to the throttle valve shaft cam. The cam provides a balance between the closing action of the throttle valves and the action of the control spring at all engine speeds.

Under operating conditions, the governor throttle valves do not close,

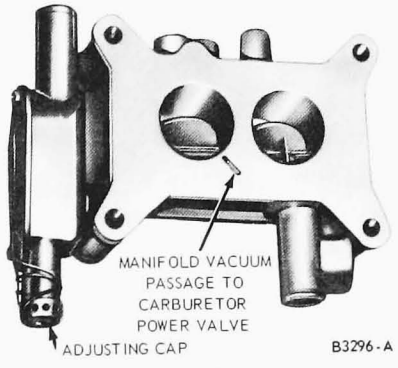

FIG. 1 Typical Velocity Governor

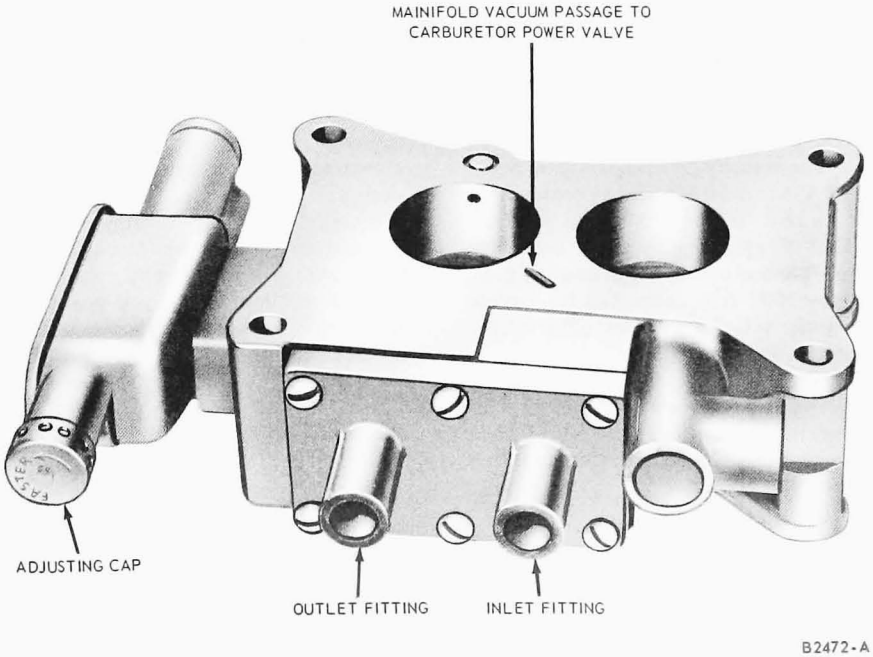

FIG. 2 Coolant Heated Velocity Governor

but remain open enough to allow the required quantity of the fuel-air mixture to flow into the manifold to maintain the governed engine speed.

To maintain the proper vacuum to the distributor, the governor has two interconnected vacuum transfer ports and a vacuum transfer plunger. When the governor throttle valves are forced toward the closed position, vacuum from the lower port is supplied to the distributor to maintain sufficient spark advance. When the governor throttle valves are open wide enough, the plunger shuts off the bottom port and the top port supplies vacuum to the carburetor distributor vacuum passage for sufficient vacuum to the distributor.

Coolant Heating Velocity Governor

The coolant heated velocity governor (Fig. 2) is used on the 360 and 390 truck engines with manual-shift transmissions. This governor has a coolant passage so that the governor can also be used as a coolant heated carburetor spacer. Otherwise, the description and operation of this governor is the same as the conventional velocity governor.

Compensating Governor 300 MD Engine

The characteristic of velocity-type governors is that the regulated engine speed increases in direct proportion to any increase in the altitude in which the engine is operated. This also causes a proportionate increase in the variance between regulated load and no-load settings. A normal sea level load setting of 3600 engine rpm becomes 4000 engine rpm at 5000 feet above sea level. A normal sea level no-load setting of 3900 engine rpm becomes 4500 engine rpm at 5000 feet above sea level. The 300 engine rpm variation at sea level becomes a 500 engine rpm variation at 5000 feet above sea level.

The velocity governor used on a 330 MD V-8 cam be adjusted to compensate for variations due to altitude. **Any 330 MD V-8 engine equipped with a velocity governor and operated consistently at or above 2000 feet above sea level must have the velocity governor adjusted for specific altitude.**

With the exception of the altitude compensating adjustment, the description and operation of this governor is the same as the conventional velocity governor.

VACUUM GOVERNOR

The throttle actuating mechanism on the carburetor (Fig. 3) has a diaphragm assembly, governor spring, and governor lever assembly. The spring and diaphragm are linked together by the governor lever which is attached to the carburetor primary throttle shaft. The controlling unit contains a centrifugally operated governor valve. The valve is driven by the distributor drive mechanism.

The operator controls the throttle plates in the usual manner below governing speeds through a clutch arrangement on the carburetor throttle body. When governing speed is reached, a combination of venturi and manifold vacuum acts on the governor diaphragm to close the throttle plates (Fig. 4). Two calibrated by-pass jets in the vacuum passages meter the vacuum from the venturi and the manifold to provide the correct balance for proper operation of the governor. At speeds below governing rpm., this vacuum is weakened by air from the governor valve so that premature governing action will not occur. Filtered air from the carburetor air cleaner enters the governor system through a passage in the carburetor to the controlling unit. A combination of vacuum from the venturi and manifold transmitted through the governor system passages on the carburetor, draws the air through the governor valve and back to the governor diaphragm on the carburetor.

In the controlling unit, centrifugal force acting on the governor valve, which has kept pace with engine speed, overcomes the tension of the valve spring and partially retards the flow of air to the throttle actuating mechanism when governing speed is reached.

The air flow is retarded by the valve sleeve being thrown outward by centrifugal force and thus partially closing the air inlet on the governor valve shaft.

The partial blocking of the air inlet reduces the amount of air bleeding through to the diaphragm on the carburetor, thus allowing manifold and venturi vacuum to operate the diaphragm. As the vacuum acting on the diaphragm becomes stronger, the diaphragm moves the governor lever against the tension of the governor spring to close the throttle plates. The governed engine speed is held for constant load by centrifugal force on the valve (in the ignition distributor) balanced against the tension of the valve spring. Any slight change in engine speed due to load restriction will cause the governor valve to react immediately, either increasing or decreasing the amount of air bleeding through the governor valve orifice. A change in amount of air bleed will, in turn, cause an instant response from the diaphragm to increase or decrease the throttle plate opening. When the accelerator is released, control is taken from the governor by the external throttle lever, and the return spring in the accelerator pedal linkage closes the throttle pedal to bring the engine to any desired lower speed.

MECHANICAL GOVERNOR

The governor is the mechanical flyweight type (Fig. 5). The flyweights are pivoted on the governor shaft. A direct mechanical linkage from the governor throttle control arm to the carburetor control arm limits carburetor action to the governor setting. As the engine speed increases, the rotation of the governor shaft increases. Centrifugal force causes the weights to move outward as the rotation of the governor shaft increases. However, a spring retards or limits the movement of the weights until the centrifugal force overcomes the spring tension. At this time the weights are forced outward closing the throttle plates through the linkage to the throttle shaft.

A clutch assembly, located on the side of the carburetor, connects the carburetor throttle shaft to the accelerator pedal linkage. When engine speed is below the governor full-load setting, the clutch is engaged. Once the full-load speed is attained, the main actuating lever on the governor and its linkage become the controlling factors and tend to close the throttle plates and disengage the clutch. At this point the maximum engine rpm is determined by the governor. When engine speed falls below the governor setting, the clutch re-engages, and the pedal accelerator linkage once again controls the rpm of the engine.

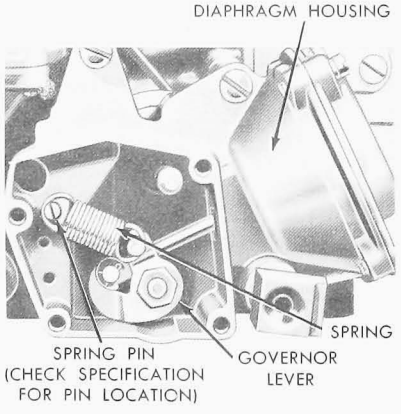

FIG. 3 Throttle Actuating Mechanism—Vacuum Governor

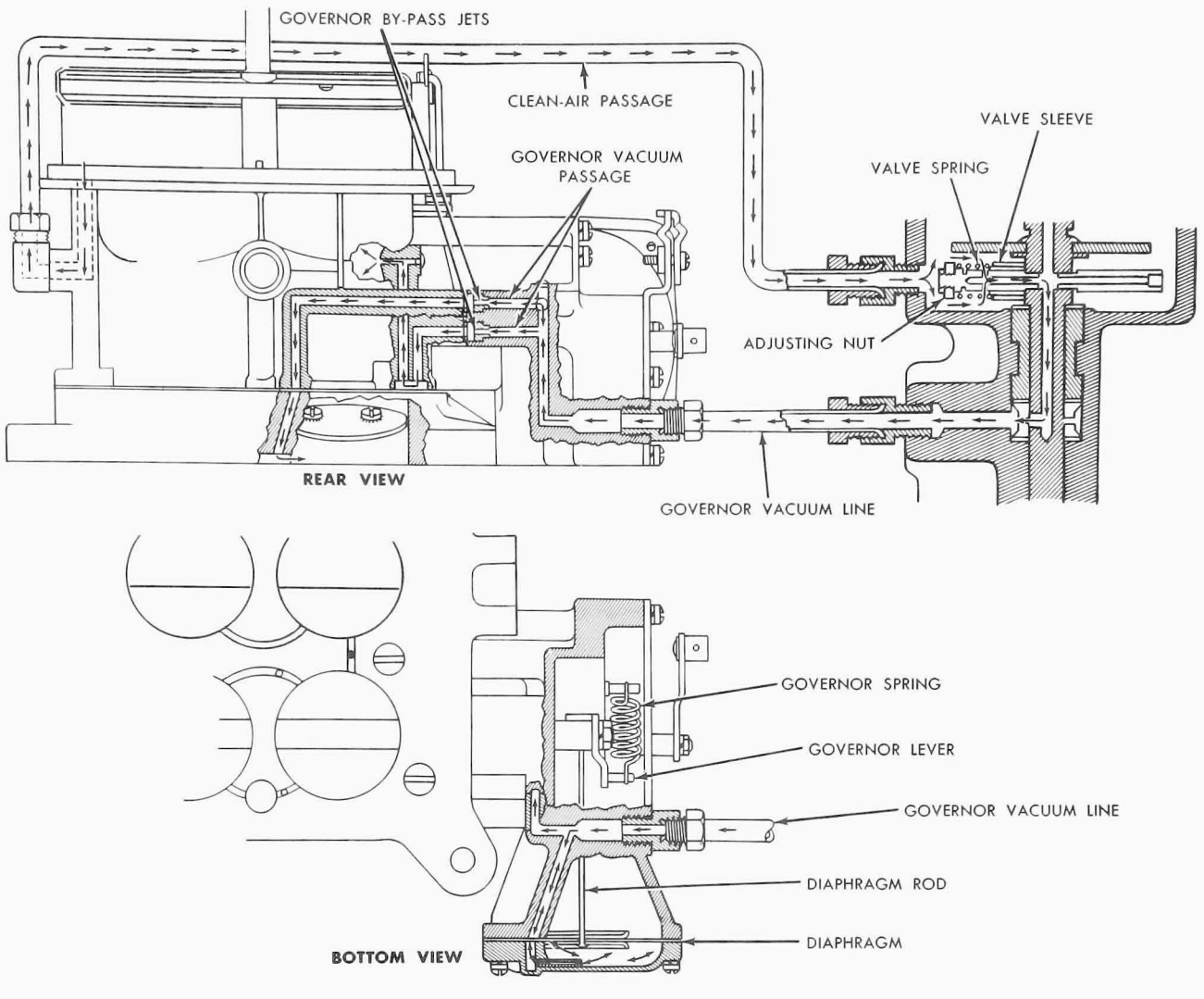

FIG. 4 Governor System

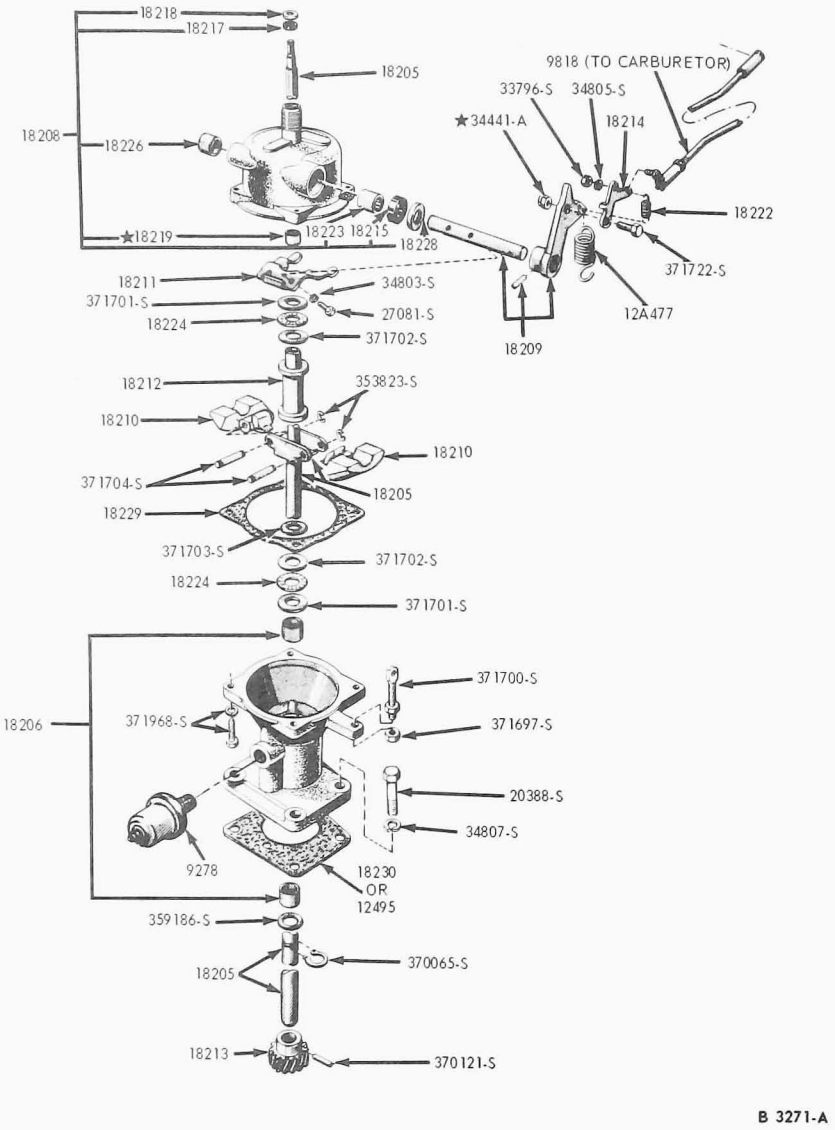

FIG. 5 Mechanical Governor

ADJUSTMENTS

VELOCITY GOVERNOR

Conventional and Coolant Heating Velocity Governors

Connect a tachometer to the engine. With the engine at normal operating temperature, operate the engine at wide open throttle and compare the rpm with the operating range of the governor. The operating range is stamped on the governor plate.

If governed speed is within range, stop the engine and remove the tachometer.

If adjustment is required or desires, remove the governor seal (Fig. 1). To increase rpm, turn the cap counterclockwise. To decrease rpm, turn the cap clockwise. When adjustment is complete, stop the engine, seal the cap, and remove the tachometer.

Compensating Governor

If the truck is going to be operated at a consistent altitude, or at varying altitudes above 2000 feet, adjust the governor by following the Constant Altitude Adjustment Procedure.

If the truck is going to be operated at varying altitudes adjust the governor by following the Varying Altitude Adjustment Procedure.

CONSTANT ALTITUDE ADJUSTMENT

1. Cut the governor seal wire and remove the adjusting cap (Fig. 1). **Do not rotate the adjusting cap during removal.**
2. Use a mirror and a light to observe the position of the slots in the adjusting bushing (Fig. 6).
3. Hold Tool T64T-12450-A in the proper position to engage the adjusting bushing slots (Fig. 6), and

carefully insert the hex-shaped center post of the tool in the hex-head of the adjusting screw. Push the tool inward until the tangs on the tool engage the slots in the adjusting bushing. **If the tool will not engage in the adjusting bushing slots, note the position of the tool and rotate the tool slightly in either direction until engagement is achieved. If it is necessary to rotate the tool more than 1/6 turn (1 flat of the hex head) to accomplish engagement, rotate the tool back to its insertion position and pull the tool out. Rotate the tool 1/6 turn in the direction required to achieve engagement and re-insert it.**

4. The altitude adjustment table (Fig. 7) specified the amount from the factory setting that Tool T64T-12450-A should be rotated to adjust the velocity governor for altitude operation. For an increase in the average altitude of operation, rotate the tool the specified amount in the counterclockwise direction.
5. Remove the tool and install the adjusting cap. **Do not turn the adjusting cap.**
6. Install the tachometer and check and adjust the no-load setting of the governor. The no-load setting should be 3900 rpm at the trucks operating altitude. If the altitude adjustment was done properly, the load setting at the truck's operating altitude should be 3600 rpm. **If the governor is being adjusted at an altitude above the truck's anticipated operating altitude, the load and no-load speeds should be slightly above 3600 and 3900 rpm respectively. If the governor is being adjusted at an altitude below the truck's anticipated operating altitude, the load and no-load should be slightly below 3600 and 3900 rpm respectively.**

If the load rpm is below the specified rpm (3500 at sea level and 3600 at operating altitudes above 2000 feet), insert the tool by following step 3 and turn it counterclockwise. Remove the tool, insert the adjusting cap and adjust the no-load setting. Check the load setting and adjust again if necessary.

If the load rpm is above the specified rpm (3500 at sea level and 3600 at operating altitudes above 2000 feet), insert the tool by following step 3 and turn it clockwise. Remove the tool, insert the adjusting cap and adjust the no-load setting. Check the load setting and adjust again if necessary.

7. Remove the tool and install the adjusting cap.

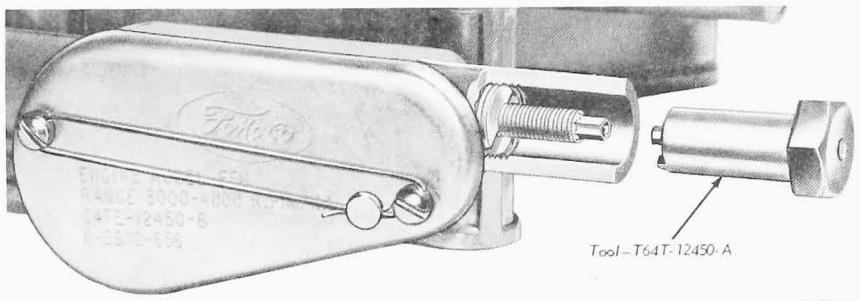

B3297-A

FIG. 6 Altitude Compensation Adjustment

8. Seal the adjusting cap to the governor body (Fig. 1) using the service governor seal wire and lead seal.

VARYING ALTITUDE ADJUSTMENT

This adjustment is made on trucks that are operating between altitudes at or near sea level and altitudes above 2000 feet.

1. Adjust the governor to 3800 rpm (no-load) for sea level operation (this is only necessary if the governor has been adjusted after the truck has left the factory).
2. Using the adjusting cap only, adjust the no-load speed for 4100 rpm at the anticipated altitude by turning the adjustment cap 1/4 turn in the clockwise direction for each 1000 foot difference between the adjusting and maximum anticipated operating altitudes.

If the maximum operating altitude of the truck is lower than the altitude at which the adjustment is being made, adjust the no-load speed to 4100 rpm with the adjustment cap.

VACUUM GOVERNOR

1. Connect a tachometer to the engine.
2. Operate the engine until normal operating temperature has been reached.
3. Operate the engine at wide open throttle and note the engine speed registered.
4. Stop the engine and remove the adjusting hole plug from the controlling unit housing.
5. With the ignition switch off, crank the engine until the governor adjusting nut is aligned with the adjustment hole.
6. Turn the adjusting nut clockwise to increase speed and counterclockwise to decrease speed. One full turn of the adjusting nut will change top speed about 150 rpm.
7. Repeat the above procedure until the proper top speed is reached.
8. Install the adjusting hole plug and tighten it securely.
9. Attach a new locking wire and lead seal to the adjusting hole plug and the adjacent fin.

Average Operating Altitude—Feet	Amount of ① Tool Rotation
2000	1/3 turn (120°)
3000	1/2 turn (180°)
4000	2/3 turn (240°)
5000	5/6 turn (300°)
6000	1 turn (360°)

① 60° or 1/6 turn rotation is equivalent to one flat of the tool hex head.

CB1023-A

FIG. 7 Altitude Adjustment Table

MECHANICAL GOVERNOR

1. Disconnect the throttle control rod at the carburetor.
2. Loosen the top nut on the primary spring adjusting eye bolt.
3. Tighten the bottom nut finger tight, then turn it in two additional turns to pre-load the spring. Tighten the top nut.
4. Move the throttle to the wide open position and connect the governor throttle control rod to the carburetor control arm.
5. Adjust the governor throttle control rod so that the governor throttle control auxiliary lever is full forward. This is the wide open throttle position. Next, shorten the rod one full turn. This will position the throttle plates slightly off wide open position and will avoid

compression of the control rod linkage.

6. Check the accelerator linkage to be sure that wide open throttle position is achieved when the accelerator pedal is depressed to the floor. Be sure that the accelerator rod or cable is attached to the proper hole in the throttle lever.
7. Check the operation of the choke plate from the full open to the full closed position for proper adjustment and freedom of operation. **On a C-or W-Series truck, the choke plate will not close completely when the choke knob is pulled all the way out.**

If there is any bind in the choke cable on a C-or W-Series truck, examine the cable for sharp or reverse bends. Be sure the end of the cable is bent downward to prevent interference with the bottom of the air cleaner, as interference will restrict opening of the choke plate.

8. To adjust the speed, operate the engine (with the parking brake applied) until normal operating temperature has been reached. Depress the throttle to the full wide open position and adjust the speed by increasing the tension of the governor main spring to increase the rpm, and by decreasing the tension to decrease the rpm.

Sensitivity of the governor can be sharpened by installing the governor spring in the hole closest to the governor lever arm pivot. Adjust the governed speed after changing the spring position.

REMOVAL AND INSTALLATION

VELOCITY GOVERNOR

Removal

1. Remove the air cleaner.
2. On a six cylinder engine, cut the governor seal wire.
3. Remove the carburetor to governor vacuum line.
4. Remove the carburetor and gasket.
5. On a 360 or 390 V-8 engine with a manual-shift transmission, partially drain the radiator and remove the coolant hoses from the governor.
6. Remove the governor, spacer (if so equipped) and gaskets. Discard the gaskets.

Installation

1. Position a new gasket over the studs on the intake manifold.
2. Install the governor and gasket.
3. Install the spacer and gasket (if so equipped).
4. Install the carburetor.
5. On a 360 or 390 V-8 with a manual-shift transmission, connect the coolant hoses to the radiator and fill the radiator.
6. Install the governor to carburetor vacuum line.
7. On a six cylinder engine, install a new governor wire and seal.
8. Install the air cleaner.

VACUUM GOVERNOR

THROTTLE ACTUATING MECHANISM

Removal

1. Disconnect the lines at the governor unit on the carburetor.
2. Remove the choke control lever and the governor housing cover, the governor spring and spring pin, the governor lever nut and lock washer, and the governor housing to main body screws and lock washers. Mark the position of the spring pin for correct assembly.
3. Lift the governor housing off the throttle shaft and remove and discard the governor housing seal.

Installation

1. Position a new governor housing gasket on the main body. Install a new governor body seal on the governor housing, then slide the housing on the throttle shaft.
2. Insert the end of the throttle shaft into the governor lever and install the governor lever lock washer and nut.
3. Install the governor housing to main body lock washers and screws.
4. Install the governor housing cover and choke control lever.
5. Connect the governor lines.

CONTROLLING UNIT

Because the governor controlling unit is integral with the distributor, the removal, disassembly, assembly, and installation procedures are covered with the distributor.

MECHANICAL GOVERNOR

Removal

1. Disconnect the tachometer drive, the oil pressure sending unit wires, and the throttle control linkage at the governor.
2. Remove the governor assembly and gasket.

Installation

1. Using a new gasket, position the governor assembly in the cylinder block and install the washers and attaching nuts.
2. Connect the throttle control linkage, the tachometer drive, and the oil pressure sending unit wires. Adjust the governor.

DISASSEMBLY AND ASSEMBLY

VACUUM GOVERNOR

THROTTLE ACTUATING MECHANISM

Disassembly

1. Remove the diaphragm rod retainer and the governor lever.
2. Remove the governor line fitting, the by-pass jets, the diaphragm cover, and the diaphragm.
3. Remove the fast idle cam shaft retainer and slide the fast idle cam and shaft out of the housing.
4. Remove the cam plunger, plunger spring, and the fast idle pin.

Cleaning and Inspection. Clean all the metal parts in carburetor cleaner. Check the housing for cracks or stripped threads.

Assembly

Refer to Fig. 8 for the correct location of the parts.

1. Place the fast idle pin in position in the governor housing with the small

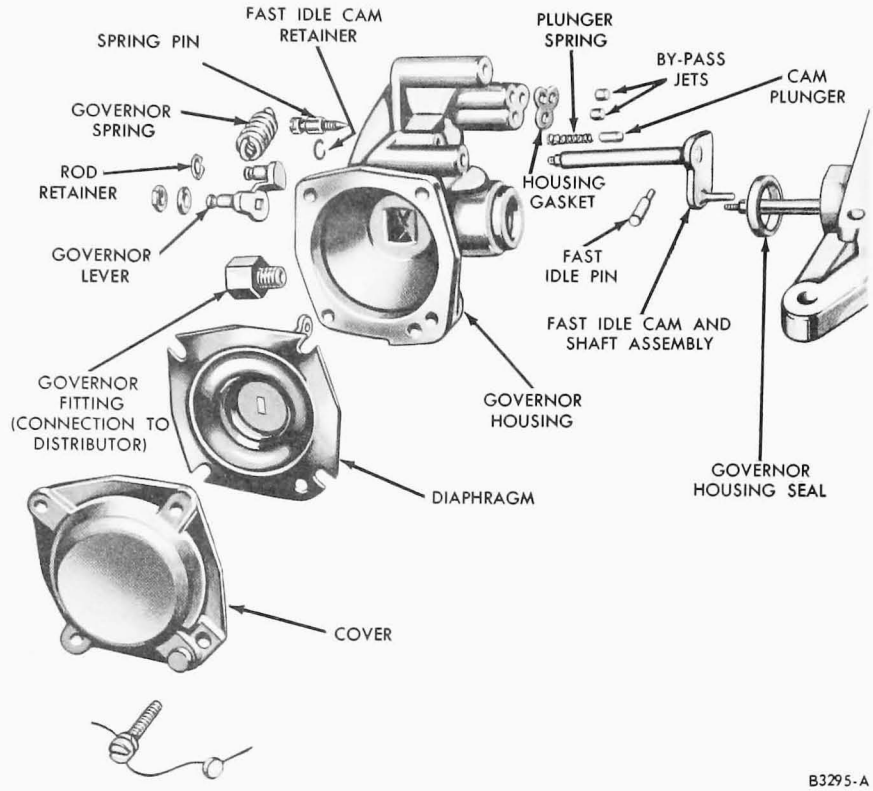

FIG. 8 Throttle Actuating Mechanism

end toward the throttle shaft.

2. Insert the fast idle cam plunger spring in the plunger and install the assembly in the governor housing.
3. Slide the fast idle cam and shaft in position and install the retainer.
4. Install the governor by-pass jets and the governor line fitting.
5. Install the governor spring pin in the same hole from which it was removed.
6. Position the governor diaphragm in the governor housing.
7. Install the cover, then install a new safety wire and seal.
8. Place the governor lever in the housing and insert the diaphragm rod on the smallest stud of the lever.
9. Install the rod retainer.

Fuel System–Gasoline Engines

GROUP 24

PART 24-01 Page
General Fuel System Service – Gasoline Engines 24-01-01

PART 24-04
Model YF 1-V Carburetor 24-04-01

PART 24-11
Model 2100-D 2-V Carburetor 24-11-01

PART 24-12
Model 2300 2-V Carburetor 24-12-01

PART 24-23
Model 4150 4-V Carburetor 24-23-01

PART 24-30
Fuel Pump – Mechanical 24-30-01

PART 24-31
Fuel Pump – Electrical 24-31-01

PART 24-40 Page
Air Cleaner – Oil Bath Type 24-40-01

PART 24-41
Air Cleaner – Dry Type 24-41-01

PART 24-42
Air Cleaner Duct System 24-42-01

PART 24-50
Fuel Tanks Fuel Lines and Evaporative Emission Control System 24-50-01

PART 24-51
Fuel Filters 24-51-01

PART 24-60
Throttle Linkage 24-60-01

CV 1198-B

PART 24-01 General Fuel System Service—Gasoline Engines

Applies To All Models

COMPONENT INDEX	Page	COMPONENT INDEX	Page
ACCELERATING PUMP DISCHARGE TEST	01-02	IDLE LIMITER CAPS Removal and Installation	01-03
CARBURETOR Cleaning and Inspection	01-04	POWER VALVE TESTS Motorcraft 2100-D Carburetor	01-02
EXHAUST GAS ANALYZER	01-03	Holley 2-V and 4-V Carburetors	01-03
FUEL PUMP Cleaning and Inspection	01-04	SUPPLEMENTAL IDLE SPEED AND FUEL MIXTURE ADJUSTMENTS	01-03

All engines incorporate a closed-type positive crankcase ventilation system and an exhaust emission system to control engine emissions within Government specifications.

To maintain the required exhaust emission levels, the carburetor must be kept in good operating condition and adjusted to specifications.

Additional engine performance checks are required to keep the exhaust emissions at the specified minimum pollutant level. Refer to the applicable owners manual for these performance checks and the recommended intervals.

This part covers general fuel system tests, adjustment and repair procedures. In addition, the cleaning and inspection procedures are covered.

For fuel system component removal, disassembly, assembly, installation and major repair procedures, refer to the pertinent part of this Group.

The carburetor identification tag is attached to the carburetor. The basic part number for all carburetors is 9510. To procure replacement parts, it is necessary to know the part number prefix and suffix and, in some instances, the design change code (Fig. 1).

Always refer to the Master Parts List for parts usage and interchangeability before replacing a carburetor or a component part of a carburetor.

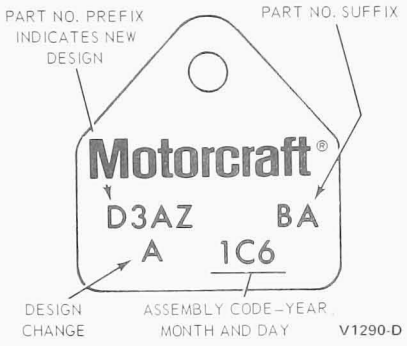

FIG. 1 Typical Carburetor Identification Tag

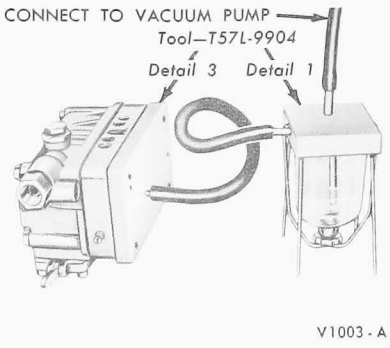

FIG. 3 Typical Holley Carburetor Power Valve Test

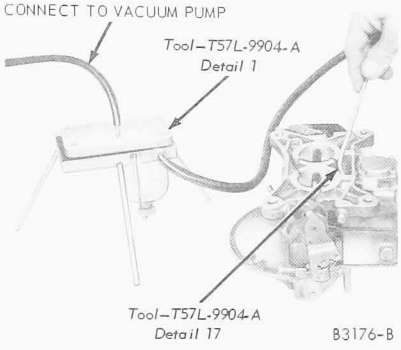

FIG. 2 Typical Motorcraft Carburetor Power Valve Test for Model 2100-D 2-V

TESTING

CARBURETOR TESTS

ACCELERATING PUMP DISCHARGE TEST

1. Remove the air cleaner.
2. Open the primary throttle plates and observe the fuel flow from the accelerating pump discharge nozzles. If the system is operating correctly, a quick steady stream of fuel will flow from the discharge nozzles.

POWER VALVE TESTS

A power valve test can be performed only on the Motorcraft Model 2100-D 2-V and Holley 2-or 4-V carburetors.

On the Carter Model YF 1-V, the power valve piston assembly is replaced only by Ford-authorized carburetor rebuilders.

A power valve must not be replaced unless it is leaking enough to cause an unadjustable rough engine idle condition. Fuel accumulation in the power valve cover does not necessarily indicate a non-functioning power valve. Fuel vapors will be drawn into the vacuum side of the power valve and condense during periods of deceleration. Leakage in the power valve area can be caused by an improperly tightened cover or leaking gaskets. Any gasket sealing qualities leakage must be corrected before the power valve is replaced.

If the power valve leakage is suspected, the following test procedure should be performed.

Motorcraft Model 2100-D 2-V Carburetor

1. Remove the carburetor from the intake manifold. Invert the carburetor.
2. Remove the glass bowl from the fixture (Fig. 2). Fill the bowl half-full of water. Install the bowl on the fixture.
3. Connect a line from the vacuum pump to the fitting on top of the fixture. Insert the large OD end of the wand into the tube and attach the other end of the tube to the fitting on the side of the fixture. Slip the rubber gasket (furnished with the tool) over the small OD end of the wand. Hold this end against the power valve vacuum pick-up port (Fig. 2).
4. Look for bubble formations in the water in the bowl. A continuous stream of bubbles indicates leakage through the power valve diaphragm or gasket, or the cover or gasket.

If leakage is encountered, the power valve, power valve gasket, cover, and cover gasket should be replaced one at a time with a new part and the test repeated until the source of leakage has

been found. If the source of leakage can not be found, the gasket seats are damaged and should be replaced.

A few bubbles may be noticed immediately upon attaching the vacuum line. The bubbling should stop within approximately 15 seconds or after the air has been removed from the system. If no bubbles are seen, the power valve, gaskets and cover are sealing properly.

Holley 2-V or 4-V Carburetor

1. Remove the fuel bowl and metering block (primary bowl and block on a 4-venturi carburetor) from the carburetor.
2. Install the fuel bowl, metering block, and gaskets on the adapter plate (Fig. 3). Be sure the fuel bowl screws are properly tightened.
3. Remove the glass bowl from the fixture and fill it half-full of water.
4. Install the bowl on the fixture.
5. Connect a line from a vacuum pump to the fitting on top of the fixture.
6. Connect a line from the adapter plate to the fitting on the side of the fixture.
7. Look for bubble formations in the water in the glass bowl. A continuous stream of bubbles indicates leakage through the power valve diaphragm or gasket. If leakage is encountered, install a new power valve and gasket and repeat the test. If leakage is still evident the gasket seat is damaged and the metering block should be replaced.

A few bubbles may be noticed immediately upon attaching the vacuum line. The bubbling should stop within approximately 15 seconds or after the air has been removed from the system. If no bubbles are seen, the power valve and gasket are sealing properly.

ADJUSTMENTS

CARBURETOR ADJUSTMENTS

SUPPLEMENTAL IDLE SPEED AND FUEL MIXTURE PROCEDURES

If a satisfactory idle condition is not obtained after performing the normal idle fuel settings, additional checks of engine systems must be performed.

1. The following items should be checked and, if required, corrected.
   a. Vacuum leak(s)-Refer to the Wiring and Vacuum Diagrams Manual (Form 7795P-73) for vacuum schematic diagrams and the location of the vacuum lines.
   b. Ignition system wiring continuity.
   c. Spark plugs.
   d. Distributor breaker point dwell angle.
   e. Distributor point condition.
   f. Initial ignition timing.

In certain instances, it may be possible that the idle condition is not as good as normally expected. It is suggested that the customer with a new vehicle be advised that the vehicle be driven 50 to 100 miles. Then, when the engine friction has been reduced, the idle condition should be improved. If, after this break-in period, the idle condition is believed to be unsatisfactory, readjust the engine idle speed to specification and observe for a satisfactory idle.

2. If the idle condition is not improved after the items in Step 1 have been checked, perform the following engine mechanical checks:
   a. Fuel level.
   b. Crankcase ventilation system.
   c. Valve clearance, using the collapsed tappet method on hydraulic valve lifters.
   d. Engine compression.
3. After verification of all engine systems has been made, there may be isolated cases where a satisfactory idle condition has not been obtained, due possible to a lean idle fuel mixture. If this condition is encountered, check the air-fuel ratio with the aid of an exhaust gas analyzer, and adjust the air-fuel ratio to specifications.

USE OF THE EXHAUST GAS ANALYZER

The use of the exhaust gas analyzer is recommended only after the Normal Fuel Setting Procedures and Additional Idle Speed and Fuel Mixture Procedures have been performed and the engine idle condition is still not satisfactory.

1. Connect a Rotunda Model BRE-42-721 Exhaust Gas Analyzer, JJRE-23 Exhaust Emission Analyzer or equivalent A/C-powered unit, in accordance with instructions provided by the manufacturer. **All exhaust gas analyzers must be checked for proper calibration.** Rotunda analyzers must have a **Certified Calibration Identification on the face of the instrument.**
2. Observe the reading obtained on the exhaust gas analyzer. **The analyzer reading must be taken with the air cleaner installed.** Refer to the specifications for the minimum air-fuel ratio or idle CO reading.
3. Turn the idle mixture adjusting screw(s), as required, within the range of the idle limiter until the specified air-fuel ratio or idle CO reading is obtained (on 2-and 4-barrel carburetors, turn the idle limiters an equal amount). **The analyzer reading must be obtained with the air cleaner installed.** Correct for any changes in engine idle speed immediately as the idle mixture screw(s) and limiters are turned. **Allow at least 10 seconds following each idle mixture screw or limiter adjustment for the analyzer reading to properly respond and stabilize.**

Verify the analyzer reading. Thermal conductivity exhaust gas analyzers will give an erroneously rich reading if the air-fuel mixture is extremely lean. To check for this condition, partially hand choke the carburetor, or rapidly open and close the throttle three or four times to enrich the air fuel mixture. The analyzer metering will reflect the momentary rich condition. Then it will deflect in the lean direction as the rich condition subsides, and will gradually return to a richer reading as the excessively lean air-fuel ratio or idle CO reading is produced. Vehicles with an automatic transmission must be in Neutral while this is being done.

4. If the air-fuel ratio or idle CO reading is to specifications, **and the various engine systems are functioning correctly,** no further adjustments should be made.

If the air-fuel ratio or idle CO reading is not to specifications, as shown by the analyzer reading, it may be corrected by altering the controlled limits of the carburetor idle fuel system. Refer to the procedures in Removal and Installation of Idle Limiter Caps.

REMOVAL AND INSTALLATION OF IDLE LIMITER CAPS

1. Remove the plastic limiter caps by cutting with side-cutter pliers and knife. After the cut is made, carefully pry the limiter apart. **On**

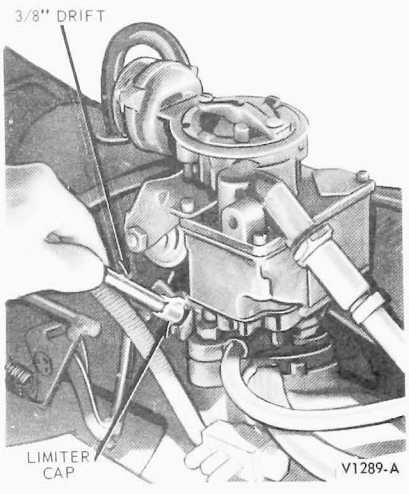

FIG. 4 Idle Limiter Installation—Carter Model YF 1-V

some carburetors, it may be necessary to remove the carburetor to remove the limiters.

On Holley 4-V carburetors with the limiters installed in the metering block, pry the limiters off with a screwdriver.

2. After the limiters are removed, set the carburetor to the correct air-fuel ratio or idle CO reading, using the exhaust gas analyzer.
3. When the air-fuel ratio or idle CO reading is within specifications, install colored plastic service limiter caps.

When installing a limiter cap, use care not to turn the idle mixture screw with the cap. Position the cap so that it is in the maximum counterclockwise position with the tab of the limiter against the stop on the carburetor.

The idle mixture adjusting screw will then be at the maximum allowable outward, or rich, setting.

To install the service limiter cap, use a straight, forward pushing force with thumb pressure or a 3/8-inch socket wrench extension (Fig. 4).

4. Recheck the air-fuel ratio or idle CO reading with the air cleaner installed, using the exhaust gas analyzer to make sure the limiter caps are properly installed. After the idle limiter has been reset and the air-fuel ratio and idle condition are satisfactory, stamp or scribe the letter **R** on the carburetor identification tag just above the name to indicate that the carburetor has been reworked.

CLEANING AND INSPECTION

CARBURETORS

Dirt, gum, water or carbon contamination in the carburetor or the exterior moving parts of the carburetor are often respondible for unsatisfactory performance. For this reason, efficient carburetion depends upon careful cleaning and inspection.

The cleaning and inspection of only those parts not included in the carburetor overhaul repair kit are covered here. All gaskets and parts included in the repair kit should be installed when the carburetor is assembled and the old gaskets and parts should be discarded.

Wash all parts except the rubber or solid nitrophyl carburetor float (if so equipped), the accelerating pump diaphragm, the power valve or power valve diaphragm, the fuel enrichment valve (4-V carburetor), the secondary throttle diaphragm (4-V carburetor), the governor diaphragm and the anti-stall dashpot diaphragm in clean commerical carburetor cleaning solvent. If a commercial solvent is not available, lacquer thinner or denatured alcohol may be used.

Rinse the parts in kerosene to remove all traces of the cleaning solvent, and then dry them with compressed air. Wipe all parts that can not be immersed in solvent with a clean, soft, dry cloth. Be sure all dirt, gum, carbon and other foreign matter are removed from all parts.

Check the metal float(s) for leaks by holding it under water that has been heated to just below the boiling point. Bubbles will appear if there is a leak. If a float leaks, replace it. Replace the float if the arm needle contact point is grooved. If the float(s) is serviceable, polish the needle contact surface of the arm with crocus cloth or steel wool. Replace the float shaft(s) if it is worn.

Force compressed air through all passages of the carburetor. **Do not use a wire brush to clean any parts or a drill or wire to clean out any openings or passages in the carburetor.** A drill or wire may enlarge the hole or passage, changing the calibration of the carburetor.

Check the choke shaft for grooves, wear, and excessive looseness or binding. Inspect the choke plate for nicked edges and for ease of operation. Free the shaft and plate, if necessary.

Check the throttle shaft(s) in its bore for binding. Check the throttle plate(s) for burrs which prevent proper closure.

Check the action of the poppet valves in the choke plate and the poppet valves in the air horn (Holley 4-V carburetor). Free them, if necessary.

Inspect the main body, throttle body and metering block (Holley carburetors) air horn, nozzle bars and booster venturi assemblies (2-V and 4-V carburetors), power valve cover, accelerating pump cover, and the secondary diaphragm housing (Holley 4-V carburetor) for cracks.

Replace all screws and nuts that have stripped threads. Replace all distorted or broken springs.

Inspect all gasket mating surfaces for nicks and burrs. Repair or replace any parts that have a damaged gasket surface.

On the Holley 2-V or 4-V carburetors, inspect the main and accelerating pump discharge nozzles and idle restrictions. If any of the openings are blocked, open them with compressed air.

On the Motorcraft 2-V carburetor, inspect the idle tubes in each nozzle bar assembly. If they are plugged, bent, or broken, replace the booster venturi and nozzle bar assembly.

Inspect the rubber boot of the anti-stall dashpot (if so equipped) for proper installation in the groove of the stem bushing. Check the stem movement for smooth operation. **Do not lubricate the stem. Replace the assembly if it is damaged.**

MECHANICAL FUEL PUMPS—GASOLINE ENGINES

On all fuel pumps, except the Carter permanently sealed type, clean the fuel pump body, valve housing and cover. If the fuel pump is equipped with an integral fuel filter, clean the filter housing and cover passages. Inspect the pump body, valve housing, cover, rocker arm, spring and pin for cracks or damage and replace them if necessary. If

the fuel valves are not serviceable and replacement is necessary replace the valve housing and valves as an assembly. Inspect the mounting flange for distortion. Remove the pump body or lap the distorted flange if necessary.

On Carter permanently sealed fuel pumps, clean the fuel pump with a cloth. Clean the integral filter housing in solvent. Inspect the fuel pumps for cracks or damage. Inspect the mounting flange for distortion. Lap the distorted flange, if necessary. Inspect the rocker arm spring, pin and the rocker arm for wear, cracks or damage. **The rocker arm spring, pin and the rocker arm are the only components on the permanently sealed fuel pumps that are replaceable. If any other fuel pump components are damaged beyond repair, replace the fuel pump.**

ELECTRIC FUEL PUMP—GASOLINE ENGINES

The electric fuel pump is replaced as an assembly and should not be disassembled for cleaning or inspection purposes. Refer to Wiring Diagram Manual, Form 7795P-73 for schematics and locations of wiring harnesses and related parts.

PART 24-04 Model YF 1-V Carburetor

Applies To All Six-Cylinder Engines

COMPONENT INDEX	Page	COMPONENT INDEX	Page
ACCELERATOR PUMP		FAST IDLE CAM SETTING	04-04
Removal and Installation	04-06	FLOAT OR NEEDLE VALVE	
AIR HORN TO MAIN BODY GASKET		Removal and Installation	04-07
Removal and Installation	04-06	FLOAT DROP ADJUSTMENT	04-05
ANTI-STALL DASHPOT	04-07	FUEL LEVEL FLOAT ADJUSTMENT	04-04
AUTOMATIC CHOKE THERMOSTATIC		IDLE SPEED AND FUEL MIXTURE	04-03
SPRING HOUSING	04-04	LOW SPEED JET	
CARBURETOR		Removal and Installation	04-06
Description	04-01	MAIN METERING JET, LOW SPEED	
Disassembly and Assembly	04-07	JET, METERING ROD, ACCELERATING	
Removal and Installation	04-07	PUMP OR CHECK BALL	
CHOKE PLATE PULLDOWN	04-05	Removal and Installation	04-06
DASHPOT ADJUSTMENT	04-04	METERING ROD	
DECHOKE ADJUSTMENT	04-05	Adjustment	04-05
FAST IDLE SPEED ADJUSTMENT	04-04	Removal and Installation	04-06

DESCRIPTION

The model YF 1-V carburetor is made up of three main assemblies: the air horn, the main body, and throttle body (Figs. 1 and 2).

The air horn, which serves as the main body cover, contains the automatic choke thermostatic control (on most models), the choke plate, internal fuel bowl vent, fuel inlet fitting, inlet needle and seat and the float and lever assembly. The anti-stall dashpot or solenoid throttle positioner (if equipped) is bracket-mounted to the air horn.

Medium-Duty vehicles in the F-B- and LN-500 Series with either a 240 or 300 CID engine and the Medium-Duty vehicles in the P-350, 400 and 500 Series with a 240 CID engine are equipped with a manual choke. All others use a vacuum piston-type automatic choke.

The main body contains the accelerator pump assembly, metering rod jet, low-speed jet, accelerator pump check ball and weight, an anti-percolator bleed and the main discharge nozzle.

The throttle body contains the throttle plate, throttle shaft and lever and idle mixture adjusting screw with a plastic limiter cap and choke connector rod (manual choke carburetors).

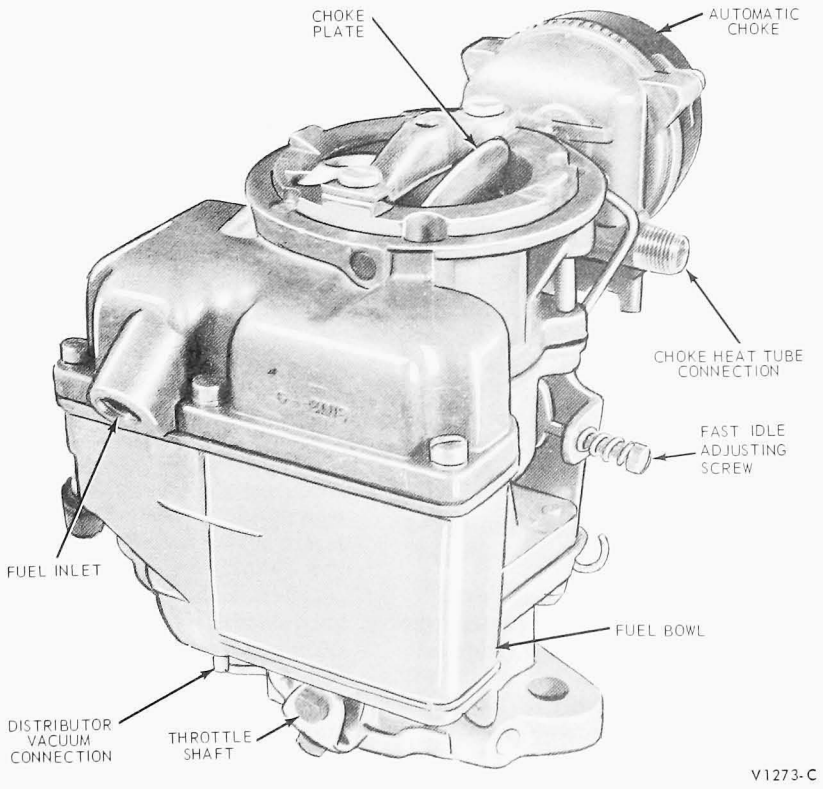

FIG. 1 Model YF 1-V Carburetor—Left Front View

The Model YF 1-V carburetors used on the F-100 4 x 2 and 4 x 4 and E-100, 200 and 300 vehicles equipped with a 240 CID Six are equipped with a solenoid throttle positioner (Fig. 3). The solenoid reduces the curb idle rpm by allowing the throttle plate to close farther than the normal curb idle position when the ignition is turned off.

The engine speed is regulated and controlled by a proportion a fuel and air delivered to the cylinders for all engine operating conditions. Operation is based on the principle of pressure differences.

Air is drawn into the carburetor air horn by manifold vacuum. As the air passes through the carburetor on the way to enter the cylinders, low pressure is created at the fuel discharge outlets of the carburetor. The fuel bowl is vented to the carburetor air horn. The high air pressure exerted on the fuel in the bowl forces the fuel to travel up through the fuel discharge channels and out into the air stream passing through the carburetor. The fuel and air is mixed at this point and distributed into the engine cylinders for combustion.

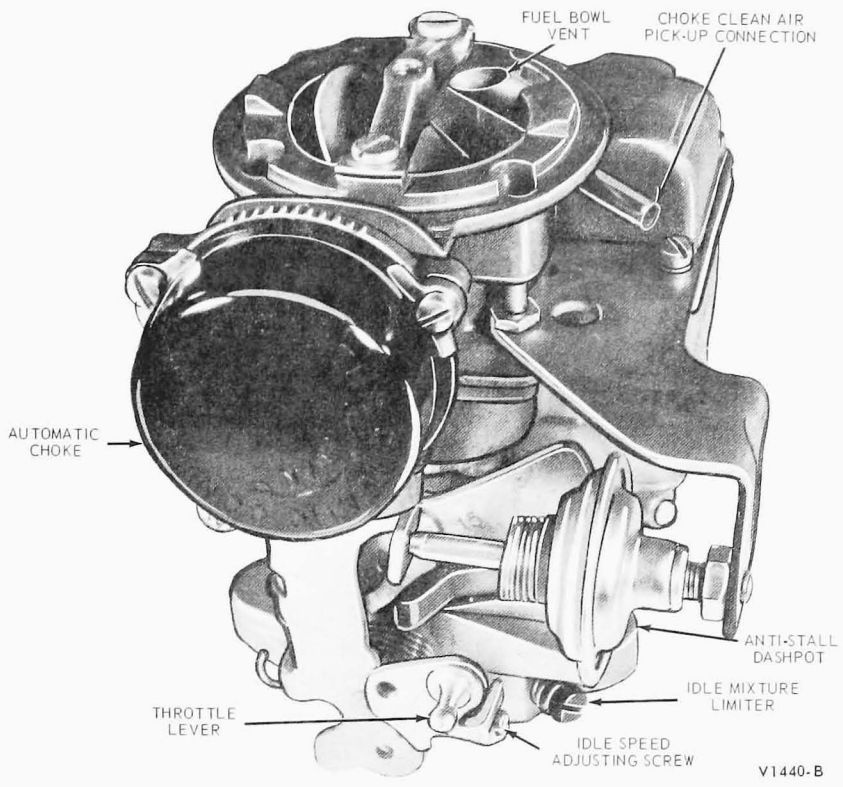

FIG. 2 Model YF 1-V Carburetor

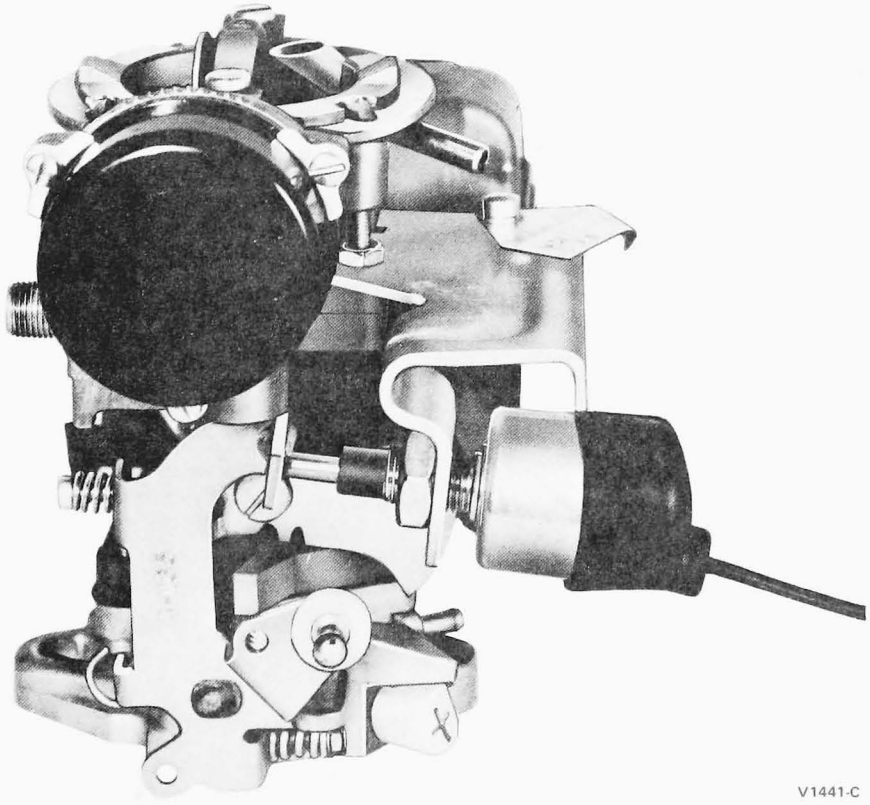

FIG. 3 Model YF Carburetor Equipped with Throttle Solenoid Positioner

ADJUSTMENTS

All carburetors are equipped with idle fuel mixture adjusting limiters. The limiters control the maximum idle fuel richness and prevent overly rich idle adjustments.

The external-type plastic idle limiter cap is installed on the head of the idle fuel mixture adjusting screw (Fig. 4). Any idle fuel mixture adjustment made on carburetors having this type of limiter must be within the range of the idle adjusting limiter. **Under no circumstances are the idle adjusting limiters or the limiter stops on the carburetor to be mutilated or deformed to render the limiter inoperative.**

A satisfactory idle should be obtainable within the range of the idle adjusting limiters, providing all other engine systems are operating within specifications.

Following are the normal procedures necessary to properly adjust the engine idle speed and fuel mixture. The specific operations should be followed in the sequence given whenever the idle speed or idle fuel adjustments are made.

In isolated cases a satisfactory idle condition may not be achieved by performing the normal procedures. If this occurs, refer to Supplemental Idle Speed and Fuel Mixture Procedures (Part 24-01).

NORMAL IDLE FUEL SETTINGS

ENGINE OFF

1. Set the idle fuel mixture screw and limiter cap to the full counterclockwise position of the limiter cap.
2. Back off the idle speed adjusting screw until the throttle plate seats in the throttle bore.
3. Be sure the dashpot or solenoid (if so equipped) plunger is not interfering with the throttle lever.

It may be necessary to loosen the dashpot to allow the throttle plate to seat in the throttle bore.

4. Turn the idle speed adjusting screw inward until it just makes the contact with the screw stop on the throttle shaft and lever assembly, and then turn the screw inward 1 1/2 turns to establish a preliminary idle speed adjustment (Fig. 5).

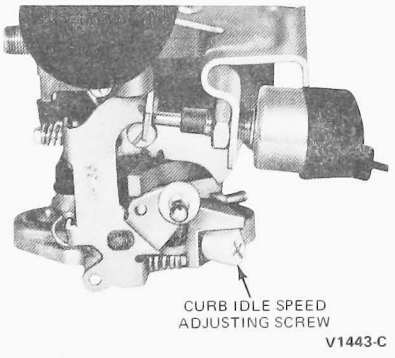

FIG. 5 Curb Idle Speed Adjusting Screw

ENGINE ON

Set the parking brake while making idle mixture and speed adjustments.

1. The engine and underhood temperatures must be stabilized before idle adjustments are made. Run the engine a minimum of 20 minutes at 1500 rpm. This can be done by positioning the fast idle screw on the intermediate step of the fast idle cam.
2. Check the initial ignition timing and the distributor advance and retard as described in Group 23.

Use an accurate reading tachometer when checking the initial ignition timing and idle fuel mixture and speed.

3. On a vehicle with a manual-shift transmission, the idle setting must be made only when the transmission is in **neutral.**

On a vehicle with an automatic transmission, the idle adjustment is made with the parking brake on the transmission selector lever in the Drive range, except as noted when using an exhaust gas analyzer (Part 24-01).

4. Be sure the choke plate is in the full-open position.
5. Turn the headlights on high beam, to place the alternator under a load condition in order to properly adjust to the specified engine idle speed during the adjustment procedure.
6. The Final idle speed adjustment is made with the air conditioner (if so equipped) turned **OFF.**
7. Adjust the engine curb idle rpm to specifications. The tachometer reading (rpm) must be taken with the air cleaner installed. On vehicles with less than 50 miles, set the idle speed approximately 25 rpm bellow specifications to allow for an idle rpm increase as the engine **loosens up** in the first 100 miles of driving.

On the Model YF 1-V equipped with a solenoid throttle positioner (Fig. 6), loosen the jam nut on the solenoid at the bracket and rotate the solenoid in or out to obtain the specified curl idle rpm. Disconnect the solenoid lead wire at the bullet connector near the loom, set automatic transmission in Neutral, then adjust the carburetor throttle stop screw to obtain 500 rpm. Connect the solenoid lead wire and open the throttle slightly by hand. The solenoid plunger will follow the throttle lever and remain in the fully extended position as long as the ignition is on and the solenoid energized.

If it is not possible to adjust the idle speed with the air cleaner installed, remove it and make the adjustment. Then replace the air cleaner and check again for the specified rpm.

8. Turn the idle mixture adjusting screw inward to obtain the smoothest idle possible within the range of the idle limiter.

Check for idle smoothness only with the air cleaner installed.

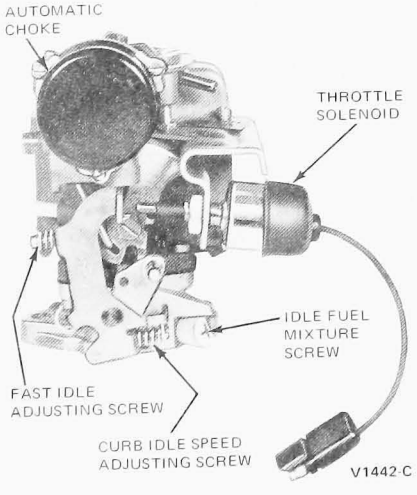

FIG. 4 Carburetor Adjustments—Model YF 1-V

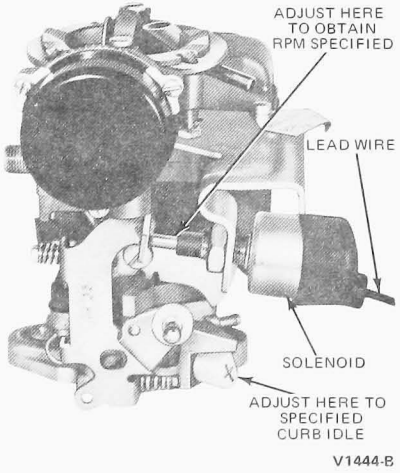

FIG. 6 Carter Model YF 1-V With Throttle Solenoid Positioner

FAST IDLE CALM INDEX SETTING

1. Position the fast idle screw on the kickdown step of the fast idle cam against the shoulder of the high step.
2. Adjust by bending the choke plate connecting rod to obtain the specified clearance between the lower edge of the choke plate and the carburetor bore.

FAST IDLE SPEED

The fast idle adjustment screw contacts one edge of the fast idle cam. The cam permits a faster engine idle speed for smoother running when the engine is cold during choke operation. As the choke plate is moved through its range of travel from the closed to the open position, the fast idle cam pick-up lever rotates the fast idle cam. Various positions on the fast idle cam permit a slower idle rpm as engine temperature rises and choking is reduced. Make certain the curb idle speed and mixture are adjusted to specification before attempting to set the fast idle speed.

MANUAL CHOKE CARBURETOR

1. With the engine operating temperature normalized (hot), air cleaner removed and a tachometer attached, manually rotate the fast idle cam to the top step while holding the choke plate fully open.
2. Turn the fast idle adjusting screw inward or outward as required to obtain the specified fast idle rpm.

AUTOMATIC CHOKE CARBURETOR

1. With the engine operating temperature normalized (hot), air cleaner removed and a tachometer attached, manually rotate the fast idle cam until the fast idle adjusting screw rests on the specified step of the cam.
2. Turn the fast idle adjusting screw (Fig.) inward or outward to obtain the specified rpm.

When setting fast idle speed, all vacuum distributor and EGR controls must be by-passed to insure proper speeds during cold operation. This can be achieved through the use of a jumper hose from the carburetor DIST part to the vacuum advance part on the distributor. The EGR vacuum source should be disconnected and plugged during the adjustment.

ANTI-STALL DASHPOT

The engine idle mixture speed must be properly adjusted before adjusting the anti-stall dashpot.

1. Remove the air cleaner.
2. Loosen the anti-stall dashpot locknut.
3. With the choke plate open, hold the throttle plate closed (idle position), and check the clearance between the throttle lever and dashpot plunger tip with a feeler gauge of the specified clearance dimension. Turn the dashpot inward or outward to obtain the specified clearance and tighten the lock nut. **The clearance must be measured with the plunger fully depressed.**

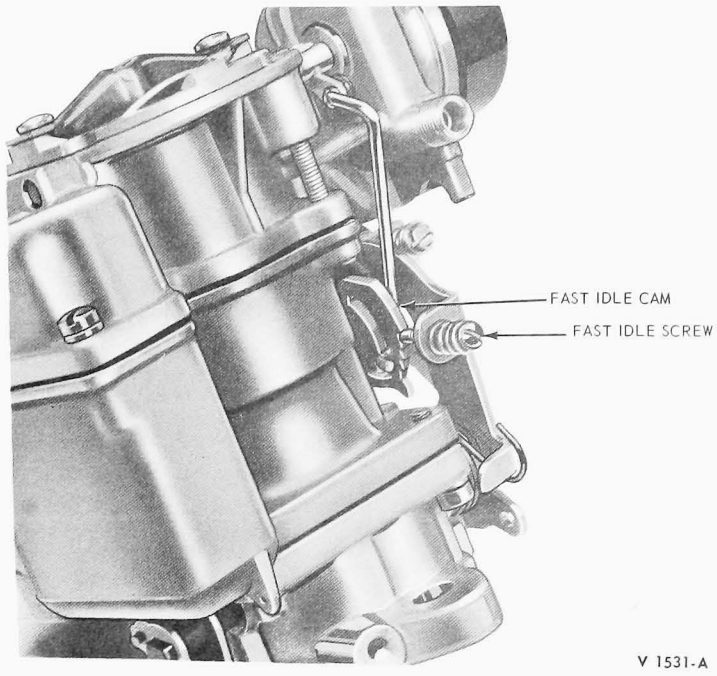

FIG. 7 Fast Idle Speed Adjustment

AUTOMATIC CHOKE THERMOSTATIC SPRING HOUSING ADJUSTMENT

The automatic choke has an adjustment to control its reaction to engine temperature. By loosening the clamp screws that retain the thermostatic spring housing to the choke housing, the spring housing can be turned to alter the adjustment. Refer to the specifications for the proper setting.

1. Remove the air cleaner assembly from the carburetor.
2. Loosen the thermostatic spring housing clamp retaining screws. Set the spring housing to the specified index mark and tighten the clamp retaining screws.
3. If other carburetor adjustments are not required, install the air cleaner assembly on the carburetor.

FLOAT ADJUSTMENT

FUEL LEVEL

The dry fuel level float adjustment for the Carter Model YF 1-V carburetor is a final float or fuel level adjustment.

1. Remove the carburetor air horn and gasket from the carburetor. Refer to Air Horn to Main Body Gasket Replacement for the proper procedure.
2. Fabricate a float level gauge (Fig. 8) to the specified float level dimension.

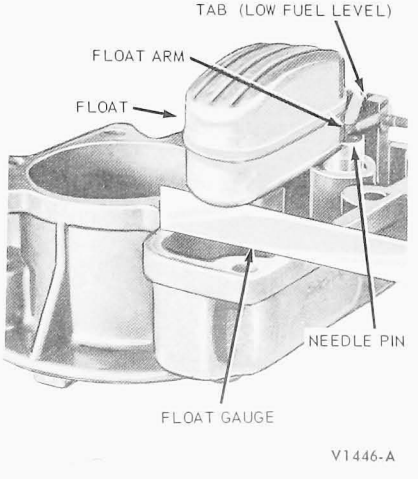

FIG. 8 Fuel Level Float Adjustment

3. Invert the air horn assembly, and check the clearance from the top of the float to the bottom of the air horn with the float level gauge (Fig. 7). Hold the air horn at eye level when gauging the float level. The float arm (lever) should be resting on the needle pin. **Do load the needle when adjusting the float.** Bend the float arm as necessary to adjust the float level (clearance). **Do not bend the tab at the end of the float arm, because it prevents the float from striking the bottom of the fuel bowl when empty.**
4. Install the carburetor air horn and a new gasket on the carburetor. Refer to Carburetor Air Horn to Main Body Gasket Replacement for the proper procedure.

DRY FLOAT DROP

1. Remove the carburetor air horn and gasket as described in this Part.
2. Fabricate a float drop gauge to the specified dimension.
3. Hold the air horn upright and let the float hang free. Measure the maximum clearance from the top of the float to the bottom of the air horn with the float drop gauge. Hold the air horn at eye level when gauging the dimension.
4. To adjust, bend the tab at the end of the float arm to obtain the specified setting.
5. Install the carburetor air horn and a new gasket as described in this Part.

METERING ROD

1. Remove the carburetor air horn and gasket from the carburetor.
2. Back out the idle speed adjusting screw until the throttle plate is closed tight in the throttle bore.

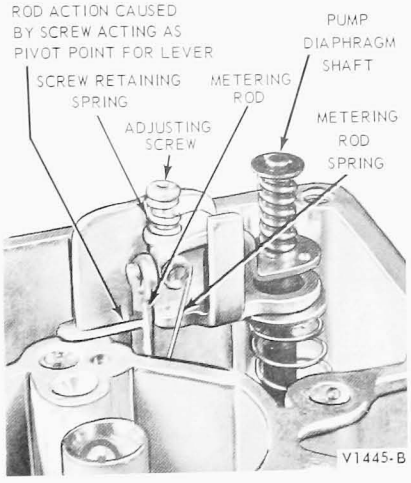

FIG. 9 Metering Rod Adjustment

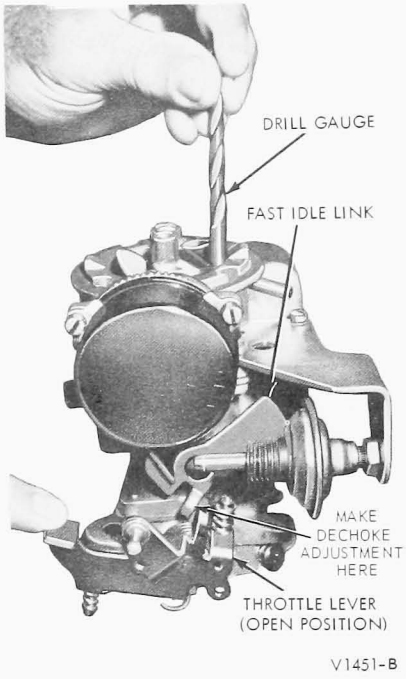

FIG. 10 Dechoke Clearance Adjustment

3. Press down on the end of the pump diaphragm shaft until the assembly bottoms.
4. To adjust the metering rod, hold the diaphragm assembly as in Step 3, then, turn the rod adjustment screw (Fig. 9) until the metering rod just bottoms in the body casting.
5. Turn the metering rod adjustment screw in (clockwise) **one additional turn for the final adjustment.**
6. Install a new gasket and the carburetor air horn.

DECHOKE CLEARANCE

1. Remove the air cleaner.
2. Hold the throttle plate fully open and choke the choke plate as far as possible without forcing it. Use a drill of the proper diameter to check the clearance between the choke plate and air horn (Fig. 10).
3. If the clearance is not within specification, adjust by bending the arm on the choke trip lever of the throttle lever. Bending the arm downward will decrease the clearance, and bending it upward will increase the clearance. Always recheck the clearance after making any adjustment.
4. If the choke plate clearance and fast idle cam linkage adjustment was performed with the carburetor on the engine, adjust the engine idle speed and fuel mixture. Adjust the dashpot (if so equipped).

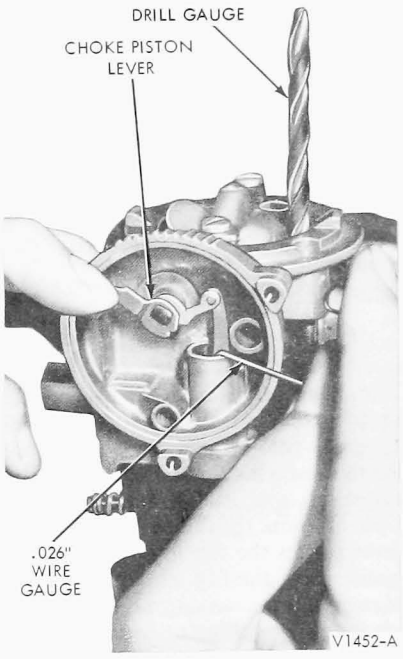

FIG. 11 Pulldown Clearance Adjustment

CHOKE PLATE PULLDOWN

1. Remove the air cleaner. Remove the choke thermostatic spring housing from the carburetor.
2. Bend a 0.026 inch diameter wire gauge at a 90 degree angle approximately 1/8 inch from one end. Insert the bent end of the gauge between the choke piston slot and the right hand slot in the choke housing. Rotate the choke piston lever counterclockwise until the gauge is snug in the piston slot.
3. Exert a light pressure on the choke piston lever to hold the gauge in place, then use a drill gauge with a diameter equal to the specified clearance between the lower edge of the choke plate and the carburetor bore to check clearance (Fig. 11).
4. To adjust the choke plate pulldown clearance, bend the choke piston lever as required to obtain the specified setting. **Be sure the piston link is not distorted when bending the piston lever. A distorted piston link will cause erratic choke operation.**
5. Install the choke thermostatic spring housing and gasket. Set the housing to specifications.

REMOVAL AND INSTALLATION

AIR HORN TO MAIN BODY GASKET

MANUAL CHOKE CARBURETOR

Removal

1. Remove the air cleaner.
2. Disconnect the choke rod at the choke lever and shaft on the carburetor air horn.
3. Disengage the choke cable connecting retainer from the cable clamp and remove the cable from the choke lever. Remove the air horn assembly attaching screws, dashpot and bracket assembly and air horn gasket. Discard the gasket.

Installation

1. Install a new air horn to main body gasket. **Make sure all holes in the new gasket have been properly punched and that no foreign material has adhered to the gasket. Install the air horn assembly, dashpot and bracket assembly and air horn attaching screws. Install the choke cable.**
2. Install the air cleaner. Start the engine and run it until normal operating temperature is reached. Adjust the idle speed and fuel mixture.

AUTOMATIC CHOKE CARBURETOR

Removal

1. Remove the air cleaner.
2. Disconnect the choke heat tube at the carburetor air horn. Disconnect the fuel inlet line at the carburetor. Disconnect the choke clean air tube.

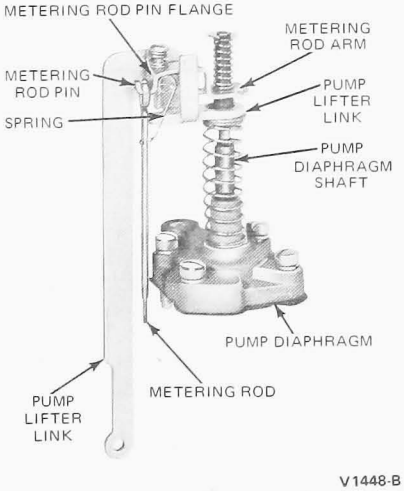

FIG. 12 Accelerator Pump and Lifter Link Assembly

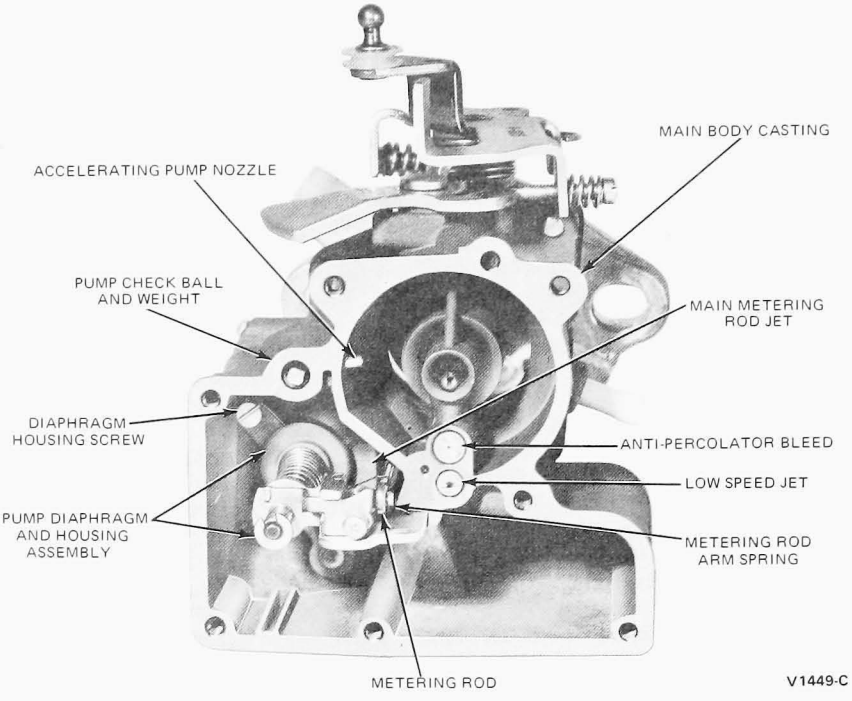

FIG. 13 Pump Diaphragm and Housing

3. Remove the wire clip retaining the link joining the choke shaft lever to the fast idle cam and remove the link. Remove the air horn assembly attaching screws, dashpot and bracket assembly or solenoid throttle positioner and air horn gasket. Discard the gasket.

Installation

1. Install a new air horn to main body gasket. **Make sure all holes in the new gasket have been properly punched and that no foreign material has adhered to the gasket. Install the air horn assembly, dashpot and bracket assembly or solenoid throttle positioner and air horn attaching screws. Position the link joining the fast idle cam to the choke shaft lever and retain in place with the wire clip.**
2. Connect the fuel inlet line and choke heat tube to the carburetor air horn. Connect the choke clean air tube.
3. Install the air cleaner. Start the engine and run it until normal operating temperature is reached. Adjust the idle fuel mixture and idle speed.

MAIN METERING JET, LOW-SPEED JET, METERING ROD, ACCELERATING PUMP OR CHECK BALL

Removal

1. Remove the carburetor from the engine.
2. Remove the carburetor air horn and gasket by following the instructions under Air Horn to Main Body Gasket Replacement.
3. Turn the main body casting upside down and catch the accelerating pump check ball and weight.
4. Loosen the throttle shaft arm screw, and remove the arm and the pump connector link.
5. Remove the accelerating pump diaphragm housing screws. Lift out the pump diaphragm assembly, the pump lifter link the metering rod (Fig. 12).
6. Disengage the metering rod arm spring from the metering rod, and remove the metering rod from the metering rod arm assembly. **Note the location of any washers shimming either spring for proper reassembly. Compress the pump upper spring, and remove the spring retainer. Remove the upper spring, the metering rod arm assembly and the pump lifter link from the pump diaphragm shaft. Compress the**

pump diaphragm shaft. Compress the pump diaphragm spring and retainer, spring and pump diaphragm assembly from the pump diaphragm housing assembly.

7. With the proper size jet tool or screwdriver, remove the low speed jet and the metering rod jet (Fig. 13).

Installation

1. With the proper size jet tool (or screwdriver) install the low speed jet and the metering rod jet (Fig. 13).
2. Install the pump diaphragm in the pump diaphragm housing. Position the pump diaphragm spring on the diaphragm shaft and housing assembly. **Install the spring shim washers in the proper locations.** Install the spring retainer. Install the pump lifter link, metering rod arm and spring assembly, and upper pump spring on the diaphragm shaft. Depress the spring and install the upper pump spring retainer.
3. Install the metering rod on the metering rod arm and place the looped end of the metering rod arm spring on the metering rod as shown in Fig. 12. Align the pump diaphragm with the diaphragm housing; make sure holes are aligned. Install the housing attaching screws to keep the diaphragm and housing aligned. Adjust the metering rod as described in Adjustment Section of this Part.
4. Install the carburetor air horn and gasket as described under Air Horn to Main Body Gasket Replacement.
5. Install the carburetor on the engine.

FLOAT OR NEEDLE VALVE

Removal

1. Remove the carburetor air horn and gasket by following the instructions under Air Horn to Main Body Gasket Replacement in this Section.
2. Hold the air horn assembly bottom side up, and remove the float pin and float and lever assembly. Turn the air horn assembly over and catch the needle pin, spring and needle and seat.
3. Remove the needle seat and gasket.

Installation

1. Replace the float if the needle pin contact surface is grooved. If the float is serviceable, polish the needle pin contact surface with crocus cloth or steel wool. Replace the float pin if it is worn.
2. Install the needle seat and gasket in the air horn. With the air horn inverted, install the needle, pin spring, needle pin, float and lever assembly and float pin.
3. Adjust the float level to specifications. Refer to Float Adjustment in this Part.
4. Install the carburetor air horn and gasket by following instructions under Air Horn to Main Body Gasket Replacement in this Section.

ANTI-STALL DASHPOT

Removal

1. Remove the air cleaner.
2. Remove the retaining nut and the dashpot from the mounting bracket.

Installation

1. Install the new dashpot and retaining nut on the mounting bracket.
2. Adjust the anti-stall dashpot. Refer to Anti-Stall Dashpot Adjustment for the proper procedure.
3. Install the air cleaner.

CARBURETOR ASSEMBLY

Removal

Flooding, stumble on acceleration and other performance complaints are in many instances caused by the presence of dirt, water or other foreign matter in the carburetor. To aid in diagnosing the cause of complaint, the carburetor should be carefully removed from the engine without removing the fuel from the bowl. The contents of the bowl may then be examined for contamination as the carburetor is disassembled.

1. Remove the air cleaner.
2. Remove the throttle cable or rod from the throttle lever. Disconnect the distributor vacuum line. EGR vacuum line, in-line fuel filter and the choke heat tube at the carburetor.
3. Disconnect the choke clean air tube from the air horn.
4. Remove the carburetor retaining nuts; then remove the carburetor. Remove the carburetor mounting gasket, spacer (if equipped) and lower gasket, from the intake manifold.

Installation

1. Clean the gasket mounting surfaces of the spacer and carburetor. Place the spacer between two new gaskets and position the spacer and gaskets on the intake manifold. Position the carburetor on the spacer and gasket and secure it with the retaining nuts. To prevent leakage, distortion or damage to the carburetor body flange, snug the nuts; then, alternately tighten each nut in a criss-cross pattern to the specified torque.
2. Connect the in-line fuel filter, throttle cable, choke heat tube, distributor vacuum line and EGR vacuum line.
3. Connect the choke clean air line to the air horn.
4. Adjust the engine idle speed, the idle fuel mixture and anti-stall dashpot (if so equipped). Install the air cleaner.

DISASSEMBLY AND ASSEMBLY

CARBURETOR ASSEMBLY

Use a separate container for the component parts of the various assemblies to facilitate cleaning, inspection and assembly.

The following is a step-by-step sequence of operations for completely overhauling the carburetor; however, certain components of the carburetor may be serviced without a complete disassembly of the unit.

Disassembly

1. Disengage the fast idle connector rod retainer from the choke connector rod, and pull the rod out of the fast idle link (manual choke carburetor).
2. Remove the attaching screws and retainers, the thermostatic spring housing assembly, spring housing gasket, spring housing baffle plate, (automatic choke carburetor) and fast idle link.
3. Remove the air horn assembly attaching screws, dashpot or solenoid and bracket assembly, air horn assembly and air horn gasket (Fig. 14).
4. Hold the air horn assembly bottom side up. Remove the float pin and float and lever assembly. Turn the air horn assembly over and catch the needle pin, spring, and needle.
5. Remove the needle seat and gasket.

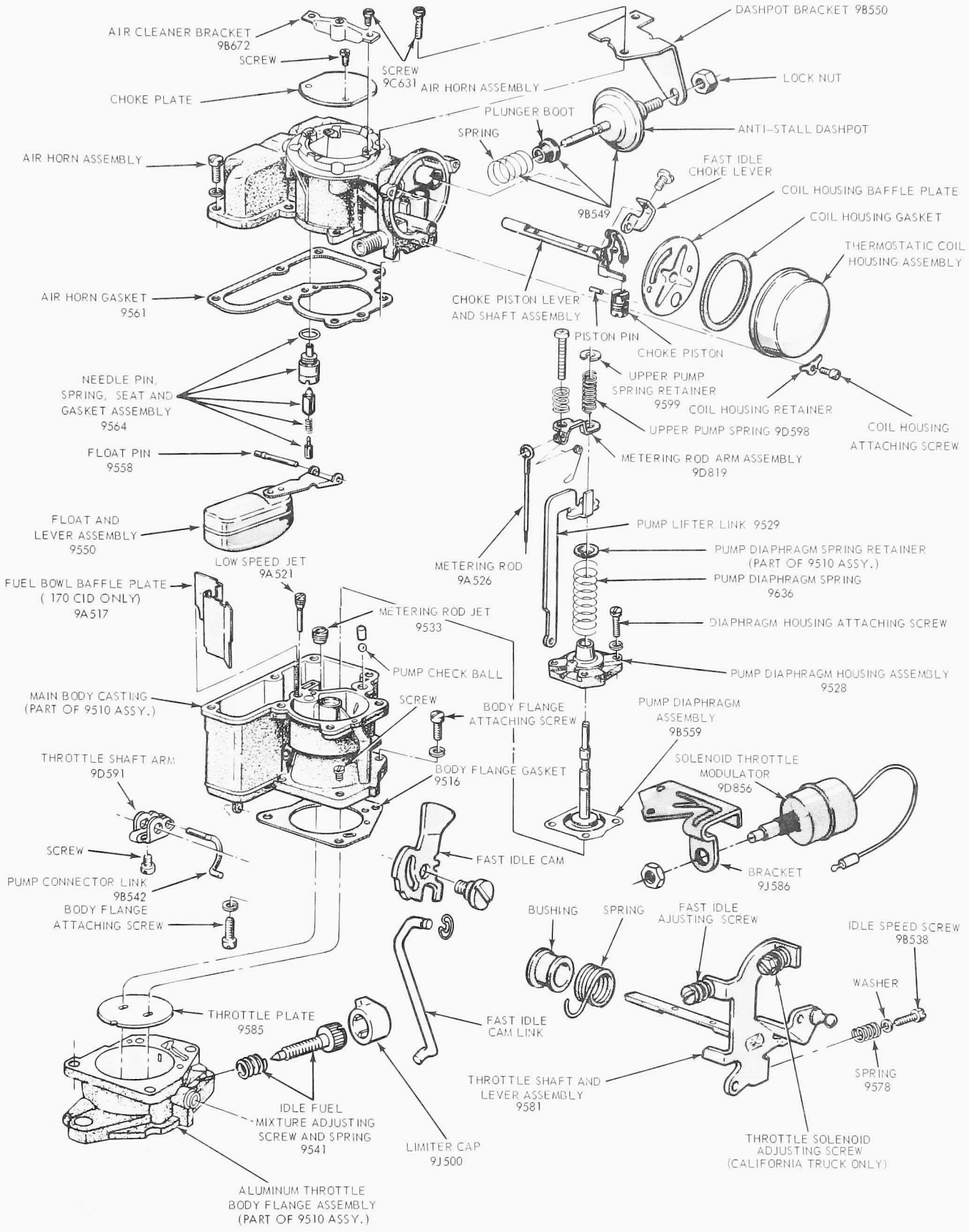

V1129-H

FIG. 14 Model YF Carburetor Disassembled

6. Remove the air cleaner bracket. Remove the choke plate attaching screws. File the staked ends, if necessary, and use new screws upon reassembly. Remove the choke plate from the air horn assembly. Remove the choke link lever and attaching screw. Rotate the choke shaft and piston assembly counterclockwise until the choke piston is out of the choke piston cylinder (Fig. 15). Remove the assembly from the air horn. Remove the piston pin and piston, from the choke piston lever and link assembly.
7. Turn the main body casting upside down and catch the accelerating pump check ball and weight.
8. Loosen the throttle shaft arm screw and remove the arm and pump connector link. Remove the fast idle cam and shoulder screw.
9. Remove the accelerator pump diaphragm housing screws. Lift out the pump diaphragm assembly, the pump lifter link, and the metering rod as a unit (Fig. 12).
10. Disengage the metering rod arm spring from the metering rod and remove the metering rod from the metering rod arm assembly. **Note the location of any washers shimming either spring for proper reassembly. Compress the upper pump spring and remove the spring retainer. Remove the upper spring, the metering rod arm assembly and the pump lifter link from the pump diaphragm shaft. Compress the pump diaphragm spring. Remove the pump diaphragm spring retainer, spring and pump diaphragm assembly from the pump diaphragm housing assembly.**
11. **With the proper size jet tool or screwdriver, remove the metering rod jet and the low speed jet (Fig. 13).**
12. Remove the attaching screws and separate the throttle body flange assembly from the main body casting. Remove the body flange gasket.
13. Remove the throttle plate attaching screws. File the staked ends, if necessary, and use new screws upon reassembly. Slide the throttle shaft and lever assembly out of the throttle body flange assembly. **Note the location of the ends of the torsion spring on the throttle shaft for proper reassembly.**

When removing the idle mixture limiter cap, be sure to note the position of the tab. After removing the limiter cap, count the number of turns to lightly seat the needle. This information will be used in reassembly.

Assembly

1. Install the throttle shaft and torsion lever assembly with the throttle return spring and bushing (Fig. 14) in the throttle body flange. Position the throttle plate on the throttle shaft with the notch in the plate aligned with the slotted idle port (Fig. 16) in the throttle body flange. Install the throttle plate attaching screws snug, but not tight. Move the shaft back and forth and rotate it to be sure the throttle plate does not bind in the flange bore. It is necessary that the throttle plate close tightly in the bore, therefore the idle speed screw should be backed out sufficiently to insure that it does not contact the throttle stop. Reposition the plate if necessary. Tighten the screws and stake (or peen) the screws in place.
2. Place a new body flange gasket and the main body casting on the throttle body flange. Install the attaching screws and tighten them evenly.
3. With the proper size jet tool (or screwdriver) install the low speed jet and the metering rod jet (Fig. 13).
4. Install the pump diaphragm in the pump diaphragm housing (Fig. 12). Position the pump diaphragm spring on the diaphragm shaft and housing assembly. Install the spring shim washers in the proper locations. Install the spring retainer. Install the pump lifter link, metering rod arm and spring assembly and upper pump spring on the diaphragm shaft. Depress the spring and install the upper pump spring retainer.
5. Install the metering rod on the metering rod arm and place the looped end of the metering rod arm spring on the metering rod as shown in Fig. 12. Align the pump diaphragm with the diaphragm housing. Make sure the holes are aligned. Install the housing attaching screws to keep the diaphragm and housing aligned.
6. Align the pump housing pump lifter link and metering rod with the main body casting. **Be sure the vacuum passage in the diaphragm housing is aligned with the vacuum passage in the main body.** Install the assembly in the main body casting, being careful to engage the pump lifter link with the main body, and to insert the metering rod in the metering rod jet. Install the pump housing attaching screws snug, but not tight. Push down on the diaphragm shaft to compress the diaphragm and tighten the attaching screws. Adjust the metering rod, following the procedure under Metering Rod Adjustment. Install the fast idle cam and shoulder screw.
7. Install the throttle shaft arm and pump connector link on the throttle shaft and pump lifter link (Fig. 16). Tighten the lock screw.
8. Assemble the choke piston and pin to the choke piston lever and link assembly. Install the choke shaft assembly in the air horn and position the piston as shown in Fig. 15.
9. Align the piston with the cylinder and rotate the shaft assembly clockwise until the piston pin is inside the piston cylinder.

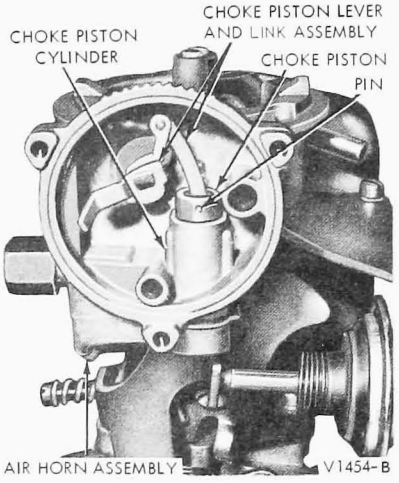

FIG. 15 Removing or Installing Automatic Choke Piston

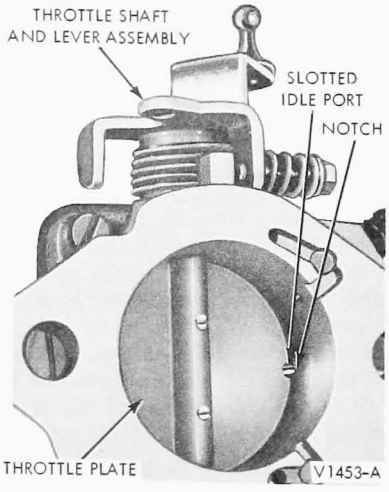

FIG. 16 Throttle Plate and Shaft Arm Installation

10. Position the choke plate on the choke shaft and install the screws snug. Check movement of the choke plate to be sure it does not bind. Tighten the screws and peen or stake them to prevent loosening. Install the choke link lever and tighten the attaching screw.
11. Install the needle seat and gasket in the air horn. With the air horn inverted, install the needle, pin spring, needle pin, float and lever assembly and float pin. Adjust the float level to specifications.
12. Place the pump check ball and weight in the main body casting (Fig. 13). Position a new air horn gasket, the air horn assembly and the anti-stall dashpot and bracket (or solenoid and bracket, if so equipped) on the main body. Install and tighten the attaching screws.
13. Install the thermostatic coil housing, gasket and baffle plate, identification mark facing outward, with the gasket between the baffle and coil housing. Be sure the thermostatic spring engages the choke lever tang. Install the retainers and housing screws. Set the coil housing index to specifications and tighten the screws.
14. Install the air cleaner bracket. Install the fast idle link. Install the choke connector rod on the throttle lever and fast idle link (manual choke carburetor). Engage the connector rod retainer with the choke connector rod when attaching air horn to main body.

PART 24-11 Model 2100 2-V Carburetor

COMPONENT INDEX	Page
ACCELERATOR PUMP	
Diaphragm Removal and Installation	11-11
Stroke Adjustment	11-08
AIR HORN TO MAIN BODY GASKET	
Removal and Installation	11-10
ANTI-STALL DASHPOT ADJUSTMENT	11-07
CARBURETOR	
Disassembly and Assembly	11-12
Removal and Installation	11-10
CHOKE DIAPHRAGM	
Removal and Installation	11-11
CHOKE PLATE PULLDOWN ADJUSTMENT	11-08
CHOKE THERMOSTATIC SPRING HOUSING ADJUSTMENT	11-07
ELASTOMER VALVE	
Removal and Installation	11-11
ELECTRIC CHOKE TESTS	
Electrical	11-05
Functional	11-05
FAST IDLE SPEED ADJUSTMENT	11-07
FAST IDLE CAM CLEARANCE	11-08
FUEL LEVEL FLOAT	
Adjustment	11-08
Removal and Installation	11-10
IDLE LIMITER CAPS	
Removal and Installation	11-11
IDLE SPEED AND FUEL MIXTURE	11-06
INLET SCREEN	
Removal and Installation	11-10
MAIN JET	
Removal and Installation	11-10
NEEDLE VALVE AND SEAT	
Removal and Installation	11-10
POWER VALVE	
Test	11-05
STAGED CHOKE VACUUM CONTROL ASSEMBLY	11-09

DESCRIPTION

The Model 2100-D carburetor (Figs. 1 through 4) has two main assemblies the air horn and the main body.

The air horn assembly, which serves as the main body cover, contains the choke plate, choke diaphragm assembly and the internal vents for the fuel bowl.

The main body contains the throttle plates, the accelerating pump assembly, the power valve assembly, and the fuel bowl. The hand throttle control linkage and bracket are attached to the main body; as well as the manual choke linkage and bracket for the 330 MD truck. Some 360 and 390 engines will use a staged choke mechanism. This system releases the choke within 15-60 seconds when underhood temperature is above 60 degrees. Choke release is accomplished through a system of vacuum controlled diaphragms.

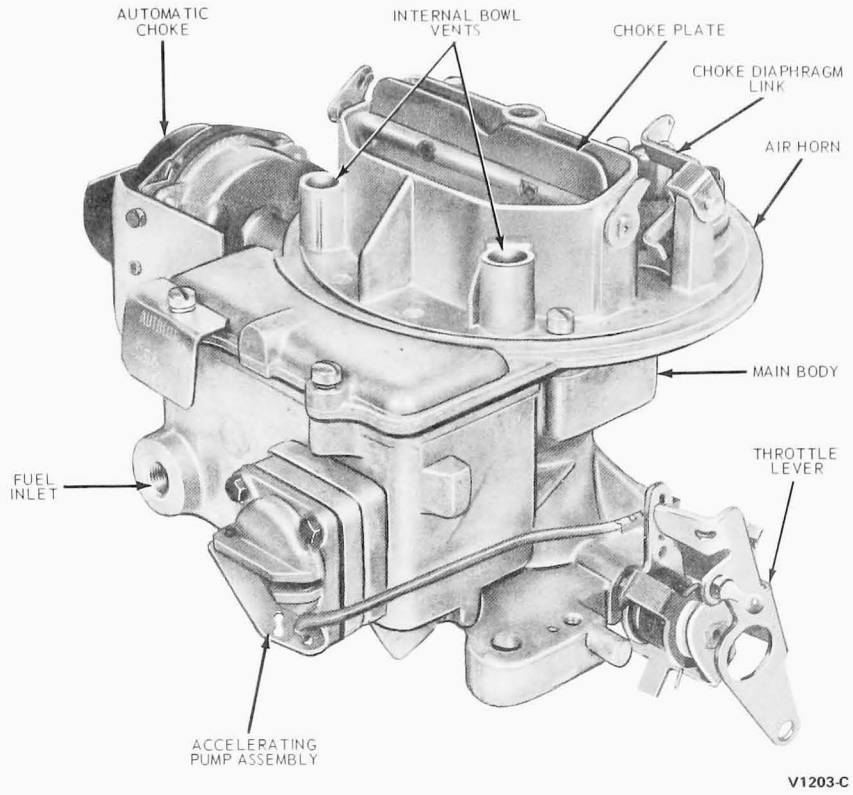

FIG. 1 Model 2100-D 2-V Carburetor—3/4 Left Front View

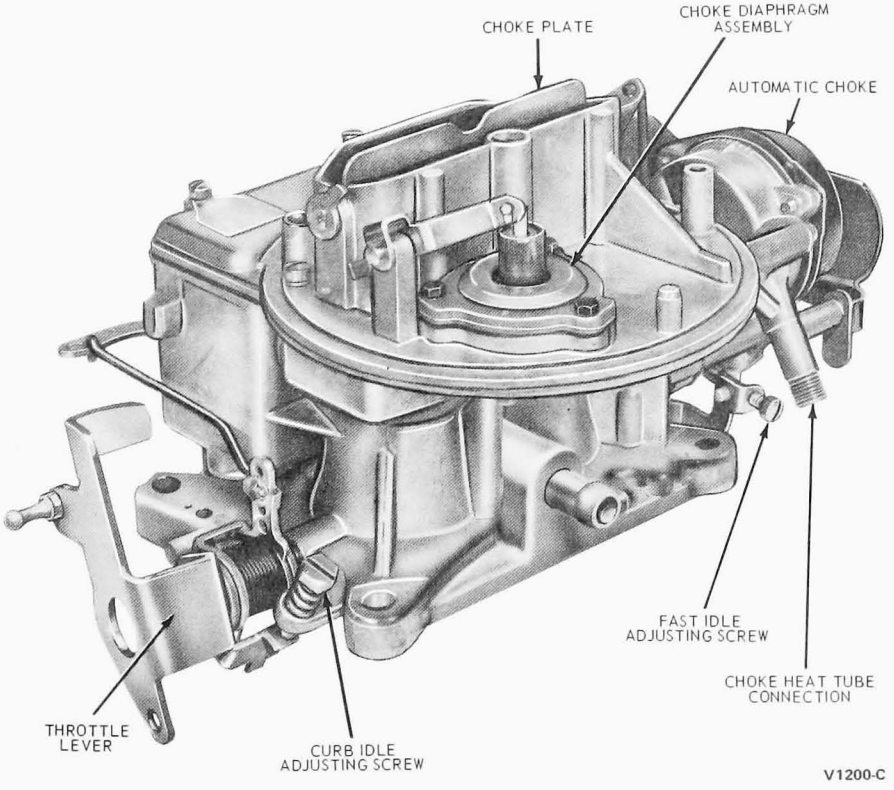

FIG. 2 Model 2100-D 2-V Carburetor—3/4 Left Rear View

On engines not equipped with a staged choke, an electric choke will be used.

The electric choke system consists of a choke cap, thermostatic spring, a bimetal temperature sensing disc (switch), and a ceramic positive temperature coefficient (PTC) heater (Fig. 5). The choke is powered from the center tap of the alternator (Fig. 6). Current is constantly supplied to the ambient temperature switch. The system is grounded through a ground strap connected to the carburetor body. At temperatures below approximately 60 degrees, the switch is open and no current is supplied to the ceramic heater located within the thermostatic spring. Normal thermostatic spring choking action then occurs. At temperatures above approximately 60 degrees, the temperature sensing switch closes and current is supplied to the ceramic heater. As the heater warms, it causes the thermostatic spring to pull the choke plates open within 1-1/2 minutes.

The two bores in the main body contain a main and booster venturi, main fuel discharge, accelerating pump discharge, idle fuel discharge and a throttle plate.

HAND THROTTLE CONTROL LINKAGE

The hand-operated (manual) throttle lever and throttle cable mounting bracket are located adjacent to the choke cam and lever assembly on the main body. The throttle lever is actuated by the throttle cable and a throttle control knob, located on the instrument panel.

As the hand throttle control knob is pulled outward, the throttle cable rotates the manual throttle lever against the fast idle throttle lever, causing the fast idle lever to depress and open the throttle plates. This action gradually increases the engine speed to suit the truck operators requirements.

The throttle control is useful for maintaining constant engine speeds when running power take-off equipment or when performing various service operations. **The vehicle must not be driven with the throttle control knob pulled outward.**

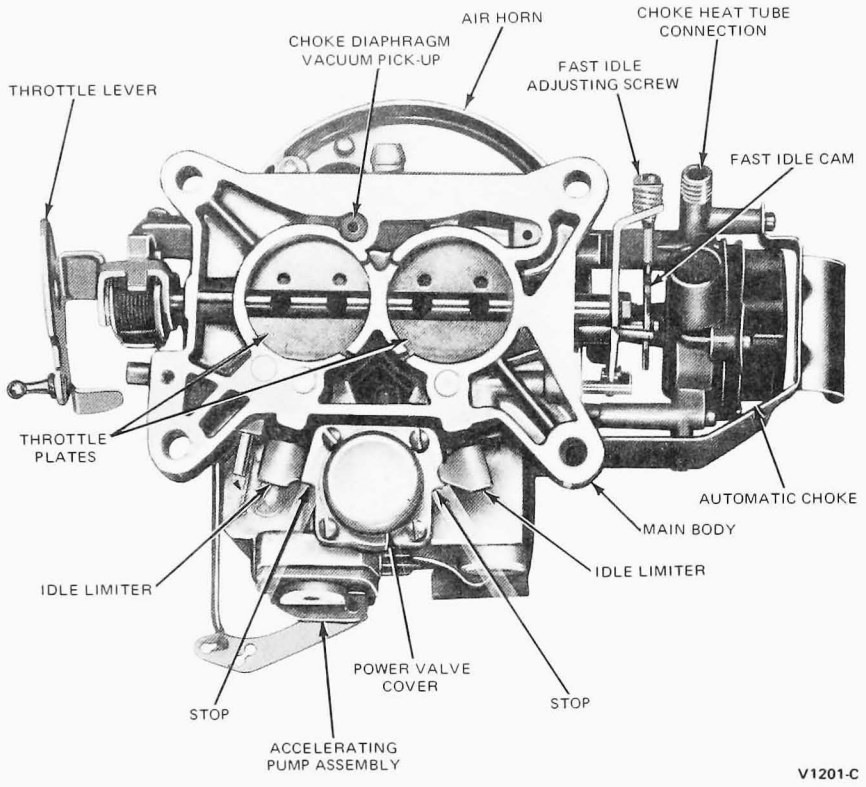

FIG. 3 Model 2100-D 2-V Carburetor—Bottom View

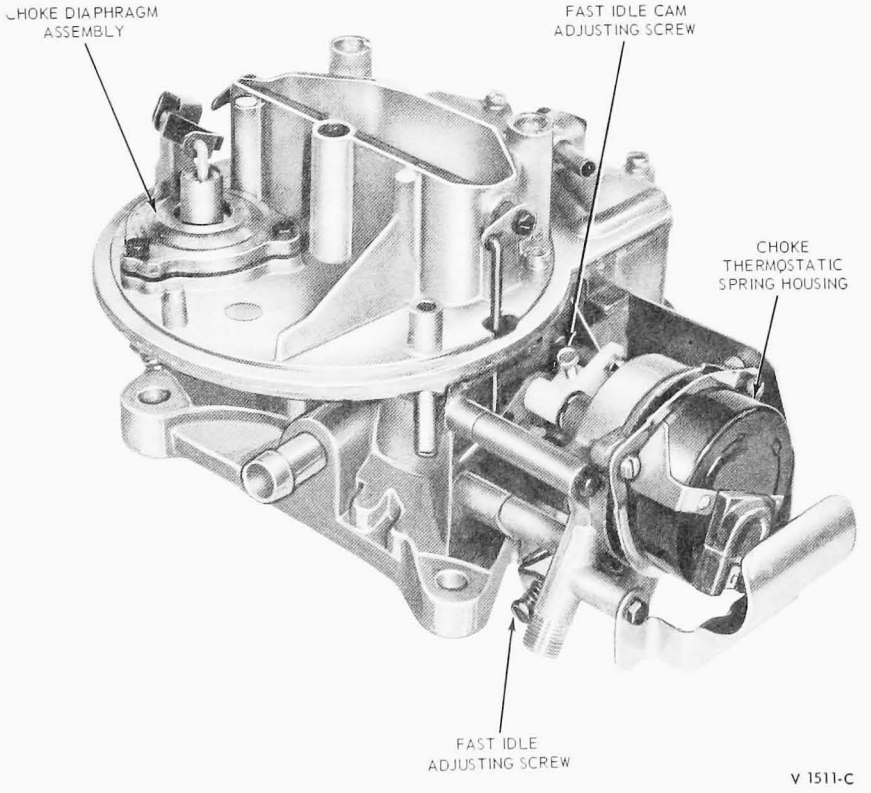

FIG. 4 Model 2100-D Carburetor—360-390 Engine

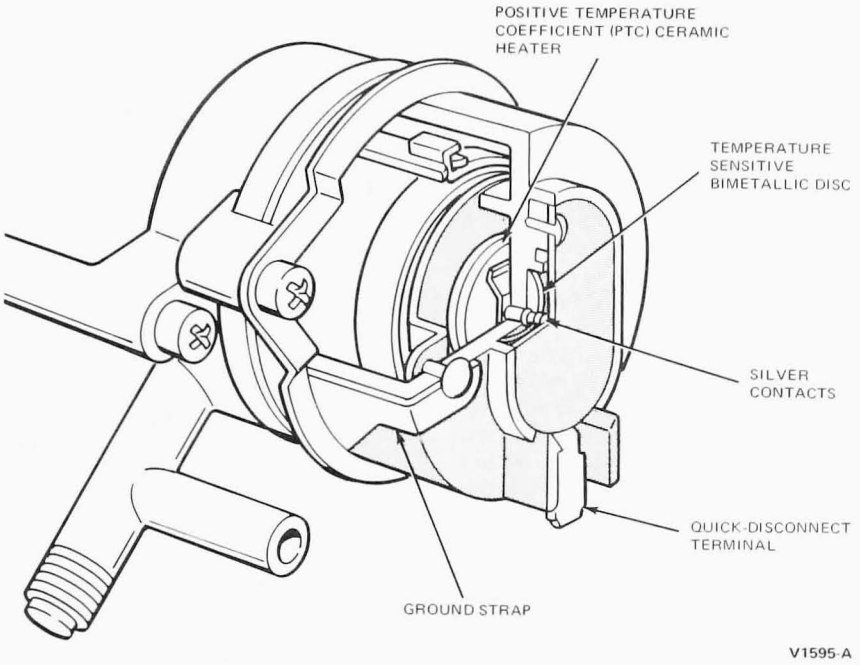

FIG. 5 Electric Choke

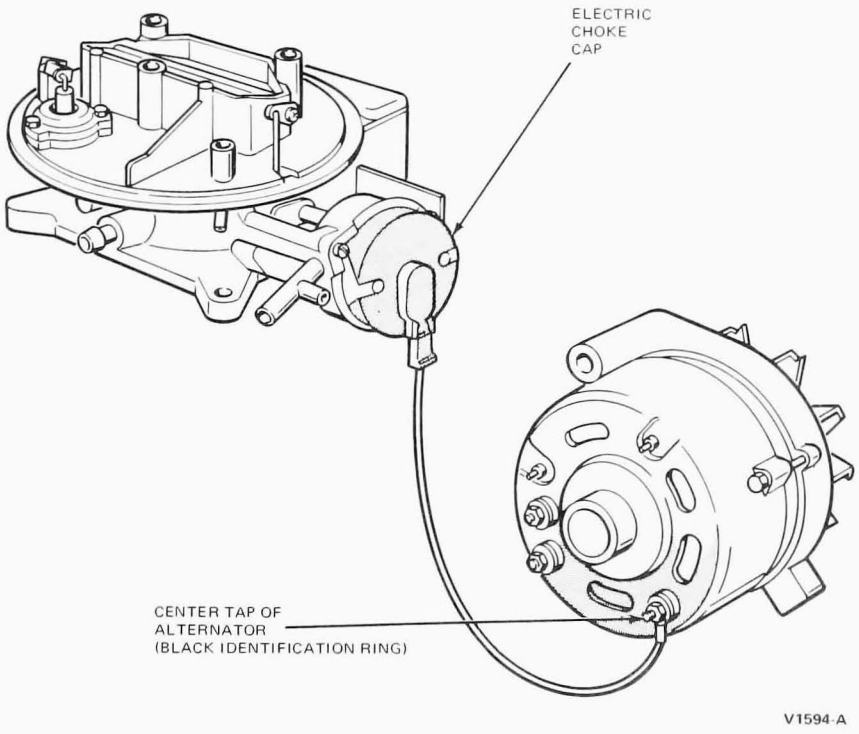

FIG. 6 Electric Choke Connection

DIAGNOSIS AND TESTING

POWER VALVE TEST

A power valve must not be replaced unless it is leaking sufficiently to cause an unadjustable rough engine idle condition. Fuel accumulation in the power valve cover does not necessarily indicate a damaged power valve. Fuel vapors will be drawn into the vacuum side of the power valve and condense during periods of deceleration. Leakage in the power valve area can be caused by an improperly tightened cover or damaged gaskets. Any gasket sealing deficiencies must be corrected before the power valve is replaced.

If power valve leakage is suspected, the following test procedure must be performed.

1. Remove the carburetor from the intake manifold. Invert the carburetor.
2. Remove the glass bowl from the fixture (Fig. 7). Fill the bowl half-full of water. Install the bowl on the fixture.
3. Connect a line from the vacuum pump to the fitting on top of the fixture. Insert the large OD end of the wand into the tube and attach the other end of the tube to the fitting on the side of the fixture. Slip the rubber gasket (furnished with tool) over the small OD end of the wand. Hold this end against the power valve vacuum pick-up port (Fig. 7).
4. Look for bubble formations in the water in the bowl. A continuous stream of bubbles indicates leakage through the power valve diaphragm or gasket, or the cover or gasket.

If leakage is encountered, the power valve, power valve gasket, cover, and cover gasket should be replaced one at a time with a new part and the test repeated until the source of leakage has been found. If the source of leakage can not be found, the gasket seats are damaged and the appropriate parts should be replaced.

A few bubbles may be noticed immediately upon attaching the vacuum line. The bubbling should stop within approximately 15 seconds or after the air has been removed from the system. If no bubbles are seen, the power valve, gaskets and cover are sealing properly.

ELECTRIC CHOKE TESTS

ELECTRICAL TESTS

Refer to the schematic drawing (Fig. 8).

1. Disconnect the choke lead wire from the choke cap. Connect a jumper wire between the choke cap terminal and the wire terminal. Start the engine.
2. Connect a test light between the connector of the choke lead wire and ground. If the light glows, current is available to the choke cap. The choke cap should be replaced.

If the light does not glow, connect the test light between the alternator stator and the choke lead wire. If the light glows, replace the lead wire.

If the light does not glow, the problem lies in the engine electrical circuit and should be isolated in the usual manner.

FUNCTIONAL TEST

1. Tape a thermometer bulb end to the metallic choke housing. Start the engine
2. If the electrical choke assembly operates at a stabilized temperature of 55 degrees or less, replace the choke cap. To achieve a stabilized temperature of 55 degrees, it may be necessary to use a Motorcraft Choke Tester Kit (LRE 3461).
3. With the engine running and the choke temperature between 80 to 110 degrees, the choke should fully open within 1-1 1/2 minutes. If it does not open within the specified time, check to see if the bi-metallic spring coil is connected to the choke lever tang. If the choke bi-metallic spring is properly connected, replace the choke cap.

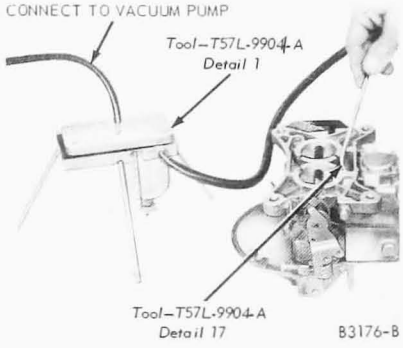

FIG. 7 Typical Power Valve Test

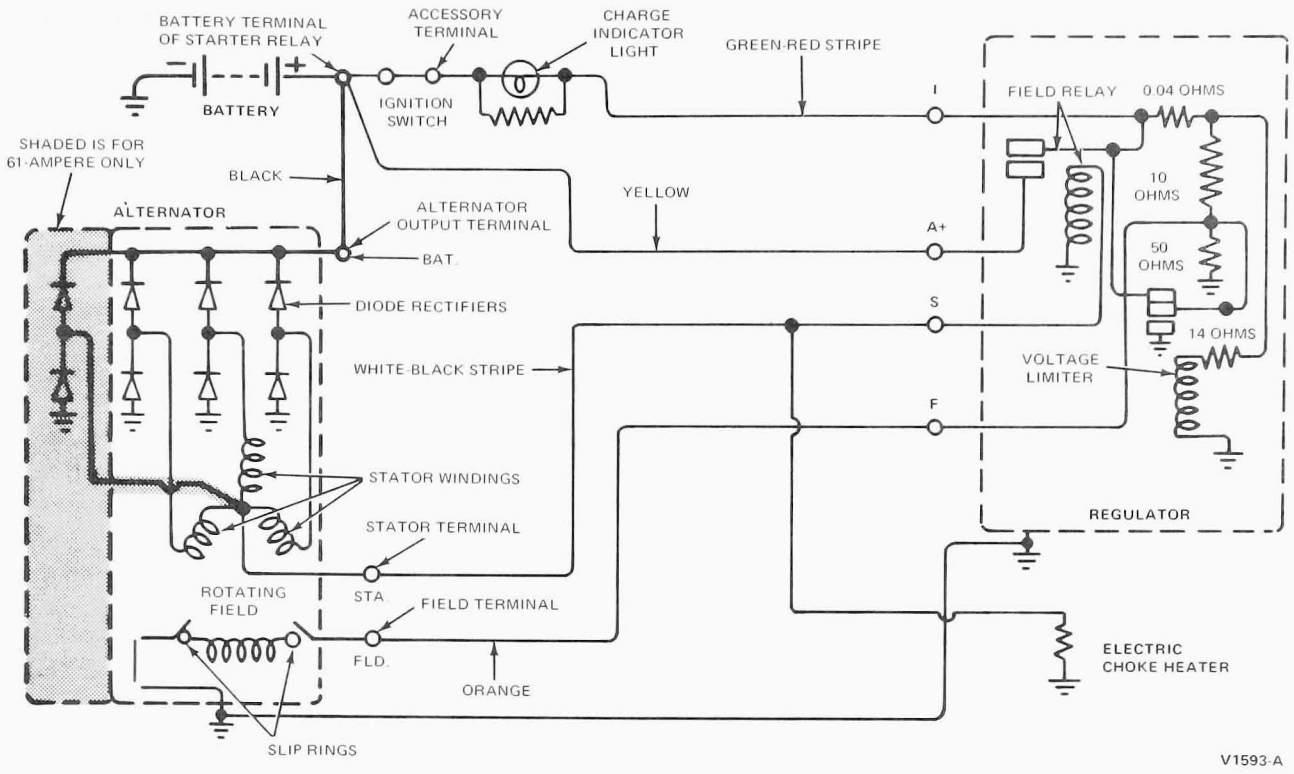

FIG. 8 Wiring Schematic—Electric Choke

ADJUSTMENTS

IDLE SPEED AND FUEL MIXTURE

All carburetors on engines manufactured for use in the U.S. are equipped with idle fuel mixture adjusting limiters. The limiters control the maximum idle richness.

The plastic idle limiter cap is installed on the head of the idle fuel mixture adjusting screws (Fig. 9).

Any adjustment made on carburetors must be within the range of the idle adjusting limiter. **Under no circumstances are the idle adjusting limiters or the limiter stops on the carburetor to be mutilated or deformed to render the limiters inoperative.**

The power valve cover must always be installed with the limiter stops on the cover in position to provide a positive stop for tabs on the idle adjusting limiters (Fig. 9).

A satisfactory idle should be obtainable within the range of the idle adjusting limiters, if all other engine systems are operating within specifications.

Following are the normal procedures necessary to properly adjust the engine idle speed and fuel mixture. The specific operations should be followed in the sequence given whenever the idle speed or idle fuel adjustments are made.

In isolated cases, a satisfactory idle condition may not be achieved by performing the normal procedures. If this occurs, refer to Supplemental Idle Speed and Fuel Mixture Procedures.

NORMAL IDLE FUEL SETTINGS—ENGINE OFF

1. Set the idle fuel mixture screws and limiter caps to the full-counterclockwise position of the limiter caps.

On export vehicles not equipped with exhaust emission control systems, establish an initial idle mixture setting by turning each screw inward until it is lightly seated; then turn it outward 1 1/2 turns. Do not turn the screws tightly against the seat, as this may damage the end of the screw. If the screw end is damaged, it must be replaced before a satisfactory adjustment can be obtained.

2. Back off the curb idle speed adjusting screw (Fig. 10) until the throttle plate(s) seat in the throttle bore(s).

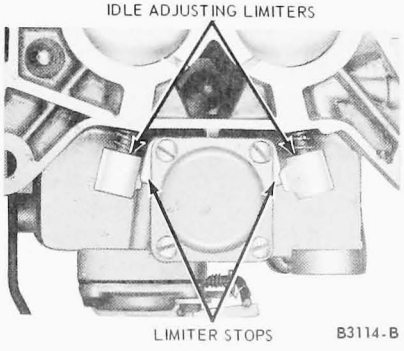

FIG. 9 Idle Fuel Mixture Adjusting Limiters and Limiter Stops—Bottom View

3. Be sure the solenoid throttle positioner is not interfering with the throttle lever (Fig. 10).

It may be necessary to loosen the solenoid to allow the throttle plates to seat in the throttle bores.

4. Turn the idle speed adjusting screw inward until it just makes contact with the screw stop on the throttle shaft and lever assembly. Then, turn the screw inward 1 1/2 turns to establish a preliminary idle speed adjustment (Fig. 10).
5. Set the parking brake while making idle mixture and speed adjustments.

NORMAL IDLE FUEL SETTINGS—ENGINE ON

1. The engine and underhood temperatures must be stabilized before idle adjustments are made. Run the engine a minimum of 20 minutes at 1500 rpm. This can be done by positioning the fast idle screw or cam follower on the kickdown step of the fast idle cam (Fig. 11).
2. Check the initial ignition timing and the distributor advance and retard as described in Part 23-01. Use an accurate reading tachometer and timing light when checking the initial ignition timing and idle fuel mixture and speed.
3. On vehicles with a manual shift transmission, the idle setting must be made only when the transmission is in **neutral.**

On vehicles with an automatic transmission, the idle setting is made with the transmission selector lever in the Drive range, except as noted when using an exhaust gas analyzer.

4. Be sure the choke plate is in the full-open position.
5. **The final idle speed adjustment is made with the air conditioner (if equipped) turned OFF.**
6. Adjust the engine curb idle rpm to specifications. The tachometer reading (rpm) must be taken with the air cleaner installed. On vehicles with less than 50 miles, set the idle speed approximately 25 rpm below specifications to allow for an rpm increase as the engine **loosens up** in the first 100 miles of driving.

If it is not possible to adjust the idle speed with the air cleaner installed; remove it, make the adjustment, then replace the air cleaner and check again for the specified rpm.

Turn the solenoid assembly in or out of the bracket to obtain the specified curb idle rpm, then tighten the lock nut. Disconnect the solenoid lead wire at the connector, set automatic transmission in NEUTRAL, then adjust the carburetor throttle stop screw to obtain 500 rpm. Connect the solenoid lead wire and open the throttle slightly by hand. The solenoid plunger will follow the throttle lever and remain in the fully extended position as long as the ignition is on and the solenoid is energized.

7. Turn the idle mixture adjusting screws inward to obtain the smoothest idle possible within the range of the idle limiters.

Turn the idle mixture adjusting screws inward an equal amount.

Check for idle smoothness only with the air cleaner installed.

FAST IDLE ADJUSTMENT

The fast idle adjusting screw (Fig. 11) contacts one edge of the fast idle cam. The cam permits a faster engine idle speed for smoother running when the engine is cold during choke operation. As the choke plate is moved through its range of travel from the closed to the open position, the fast idle cam pick-up lever rotates the fast idle cam. Each position on the fast idle cam permits a slower idle rpm as engine temperature rises and choking is reduced.

Make certain the curb idle speed and mixture are adjusted to specification before attempting to set the fast idle speed.

1. With the engine operating temperature normalized (hot), air cleaner removed and the tachometer attached, manually rotate the fast idle cam until the fast idle adjusting screw rests on the specified step of the cam.
2. Turn the fast idle adjusting screw inward or outward as required to obtain the specified fast idle rpm.

ANTI-STALL DASHPOT

1. With the engine idle speed and mixture properly adjusted, and the engine at normal operating temperature, loosen the anti-stall dashpot lock nut (Fig. 12).
2. Hold the throttle in the closed position and depress the plunger with a screwdriver blade. Measure the clearance between the throttle lever and the plunger tip. Turn the anti-stall dashpot in a direction to provide the specified clearance between the tip of the plunger and the throttle lever. Tighten the locknut to secure the adjustment.

AUTOMATIC CHOKE THERMOSTATIC SPRING HOUSING ADJUSTMENT

The automatic choke has an adjustment to control its reaction to engine temperature. By loosening the clamp screws that retain the

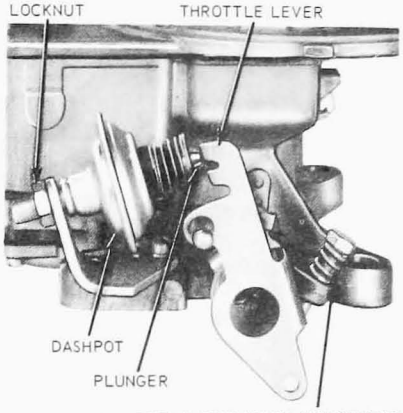

FIG. 10 Curb Idle Speed Adjusting Screw

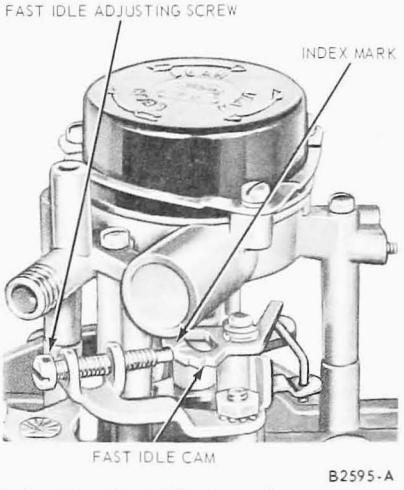

FIG. 11 Fast Idle Speed Adjustment

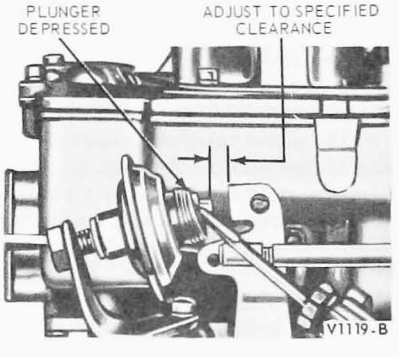

FIG. 12 Typical Anti-Stall Dashpot Adjustment

thermostatic spring housing to the choke housing, the spring housing can be turned to alter the adjustment. Refer to the specifications for the proper setting.

1. Remove the air cleaner assembly, heater hose and mounting bracket (if so equipped) from the carburetor.
2. Loosen the thermostatic spring housing clamp retaining screws. Set the spring housing to the specified index mark (Fig. 13) and tighten the clamp retaining screws.
3. If other carburetor adjustments are not required, install the heater hose and mounting bracket (if so equipped) and the air cleaner assembly on the carburetor.

ACCELERATING PUMP STROKE ADJUSTMENT

The accelerating pump stroke has been set to help keep the exhaust emission level of the engine within the specified limits. The additional holes provided for pump stroke adjustment are for adjusting the stroke for specific engine applications. **The stroke should not be changed from the specified setting.**

If the pump stroke has been changed from the specified setting refer to the following instructions to correct the stroke to specifications.

The primary throttle shaft lever (overtravel lever) has 4 holes and the accelerating pump link has 2 holes (Fig. 14) to control the accelerating pump stroke.

The accelerating pump operating rod should be in the specified hole in the overtravel lever and the inboard hole (hole closest to the pump plunger) in the accelerating pump link (Fig. 14).

1. To release the rod from the retaining clip, press the tab end of the clip toward the rod; then, at the same time, press the rod away from the clip until it is disengaged.
2. Position the clip over the specified hole in the overtravel lever. Press the ends of the clip together and insert the operating rod through the clip and the overtravel lever. Release the clip to engage the rod.

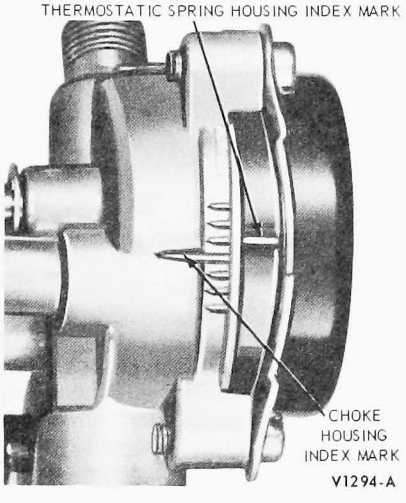

FIG. 13 Automatic Choke Thermostatic Spring Housing Adjustment

CHOKE PLATE PULLDOWN AND FAST IDLE CAM CLEARANCE

CHOKE PLATE PULLDOWN

1. Remove the air cleaner.
2. With the engine at normal operating temperature, loosen the choke thermostatic spring housing retainer screws and set the housing 90 degrees in the **rich** direction.
3. Disconnect and remove the choke heat tube from the choke housing.
4. Turn the fast idle adjusting screw outward **one full turn.**
5. Start the engine, then check for the specified clearance between the lower edge of the choke plate and the air horn wall (Fig. 15).
6. Because the choke plate pulldown is set in production by means of an air-fuel meter, no specific clearance is indicated for pulldown adjustment. If the vehicle shows indication of leaness during cold starting, decrease the clearance between the choke plate and the air horn wall by 0.020 inch. If the engine shows signs of an overrich condition during cold starting, increase the pulldown clearance by 0.020 inch. If additional adjustment is required always make the adjustments in steps of 0.020 inch. If the original pulldown adjustment is lost, set the clearance between the choke plate and the air horn to 0.160 inch. Then adjust as required in steps of 0.020 inch.
7. Connect the choke heat tube and set the choke thermostatic spring housing to specifications. Adjust the fast idle speed to specifications.

FAST IDLE CAM CLEARANCE

1. Rotate the choke thermostatic spring housing 90 degrees in the rich direction.
2. Position the fact idle speed screw on the high step of the cam.
3. Depress the choke pulldown diaphragm against the diaphragm stop screw to place the choke in the pulldown position.
4. While holding the choke pulldown diaphragm depressed, open the throttle slightly and allow the fast idle cam to fall.
5. Close the throttle and check the position of the fast idle cam. The screw should contact the cam at the V mark on the cam.
6. Adjust the fast idle cam adjusing screw to obtain the proper setting.

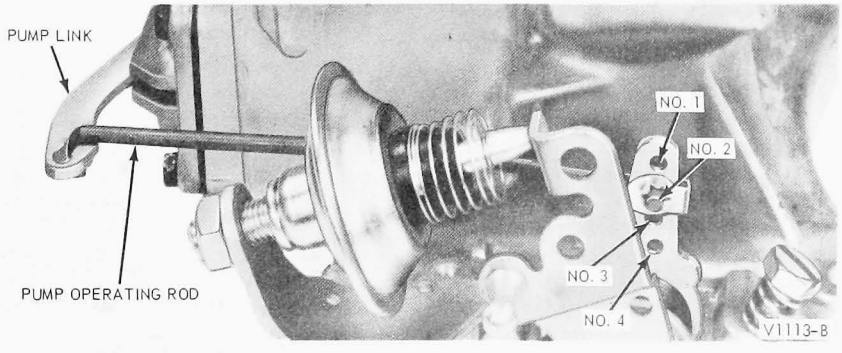

FIG. 14 Accelerating Pump Stroke Adjustment

FUEL LEVEL FLOAT ADJUSTMENT—DRY

The dry float adjustment is a preliminary fuel level adjustment only. The final adjustment (Fuel Level Float Adjustment—Wet) must be made after the carburetor is mounted on the engine.

With the air horn removed, the float raised and the fuel inlet needle seated, check the distance between the top surface of the main body (gasket removed) and the top surface of the float for conformance to specifications. Depress the float tab to seat the fuel inlet needle. Take the measurement near the center of the float at a point 1/8-inch from the free end of the float.

If the cardboard float gauge is used, place the gauge in the corner of the enlarged end section of the fuel bowl (Fig. 16). The gauge should touch the

float near the end, but not on the end radius.

If necessary, bend the tab on the float to bring the setting within the specified limits. This should provide the proper preliminary fuel level setting.

FUEL LEVEL FLOAT ADJUSTMENT—WET

1. Operate the engine to normalize engine temperatures, and place the vehicle on a float surface as near level as possible. Stop the engine.

FUEL LEVEL FLOAT ADJUSTMENT—WET

1. Operate the engine to normalize engine temperatures, and place the vehicle on a flat surface as near level as possible. Stop the engine.
2. Remove the carburetor air cleaner assembly and anchor screw, if they have not been previously removed.
3. Remove the air horn attaching screws and the carburetor identification tag. Temporarily place the air horn and gasket in position on the carburetor main body and start the engine. Let the engine idle for a few minutes, then rotate the air horn out of the way and remove the air horn gasket to provide access to the float assembly.
4. While the engine is idling, use a standard depth scale to measure the vertical distance from the top machined surface of the carburetor main body to the level of the fuel in the fuel bowl (Fig. 17). The measurement must be made at least 1/4-inch away from any vertical surface to assure an accurate reading, because the surface of the fuel is concave (higher at the edges than in the center). Care must be exercised to measure the fuel level at the point of contact with the float with the fuel. Refer to the specifications for the correct fuel level (Wet) setting.
5. **If any adjustment is required, stop the engine to minimize the hazard of fire due to fuel spray when the float setting is disturbed.** To adjust the fuel level, bend the float tab (contacting the fuel inlet valve) upward in relation to the original position to raise the fuel level, and downward to lower it. Each time an adjustment is made to the float tab to alter the fuel level, the engine must be started and permitted to idle for a few minutes to stabilize the fuel level. Check the fuel level after each adjustment until the specified level is obtained.
6. Install a new air horn gasket, the air horn assembly, carburetor identification tag and the attaching screws. Tighten the screws. Install the air cleaner anchor screw and tighten to the specified torque.
7. Check the idle fuel mixture, idle speed adjustments and the carburetor dashpot adjustment (if so equipped). Adjust the carburetor as required.
8. Install the air cleaner.

STAGED CHOKE VACUUM CONTROL ASSEMBLY

This adjustment should be made only if the control unit has been replaced, the carburetor has been overhauled or a choke adjustment has been made. Also, the choke pulldown and fast idle cam adjustments must be made before this adjustment is performed.

1. Be sure the choke plate is fully closed.
2. Measure the clearance between the forward edge of the choke link and the edge of the slot in the choke

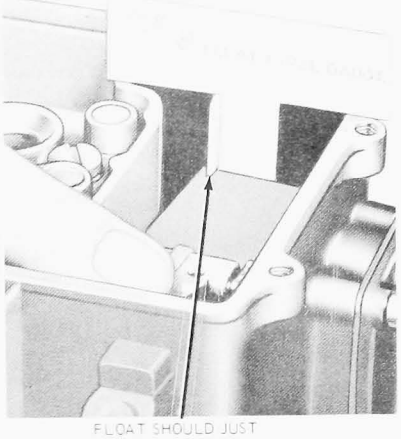

FIG. 16 Fuel Level Float Adjustment—Dry

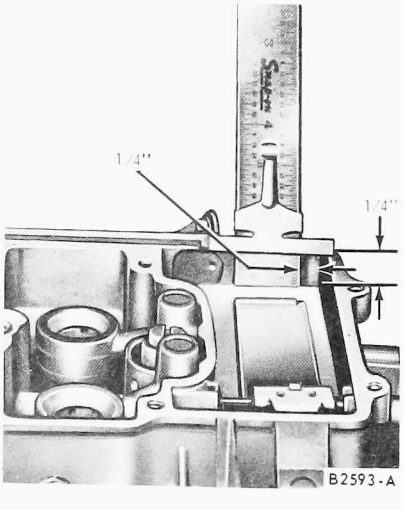

FIG. 17 Fuel Level Float Adjustment (Wet)

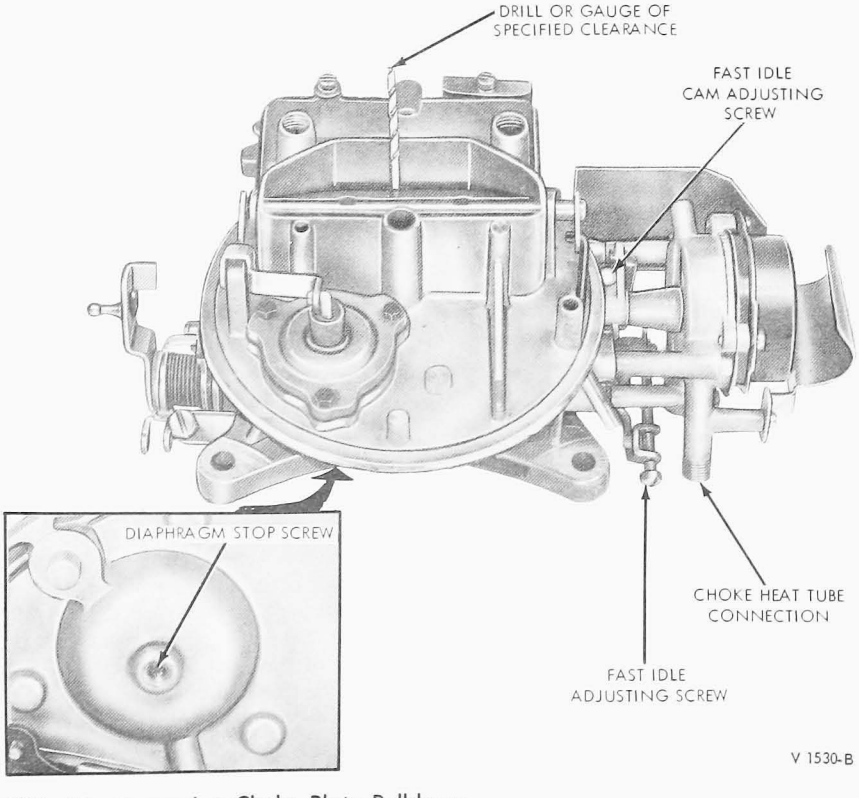

FIG. 15 Measuring Choke Plate Pulldown

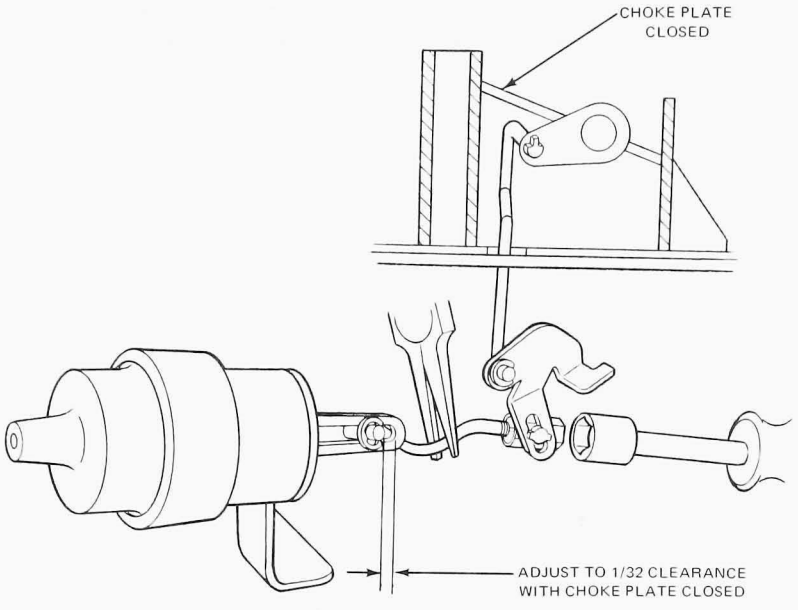

FIG. 18 Staged Choke Vacuum Control Adjustment

vacuum lever, as shown in Fig. 18. Be sure the C-clip is positioned so that the gap is visible.

3. If the adjustment is required, insert a 1/4 inch socket and driver on the nylon adjuster as shown in Fig. 18. Grasp the choke link with needle-nose pliers to prevent flexing and turn the adjuster in or out until the proper clearance is obtained.

REMOVAL AND INSTALLATION

CARBURETOR ASSEMBLY

Removal

Flooding, stumble on acceleration and other performance complaints are in many instances, caused by the presence of dirt, water or other foreign matter in the carburetor. To aid in diagnosing the cause of complaint, the carburetor should be carefully removed from the engine without removing the fuel from the bowl. The contents of the bowl may then be examined for contamination as the carburetor is disassembled.

1. Remove the air cleaner.
2. Remove the throttle cable or rod from the throttle lever. Disconnect the distributor vacuum line, in-line fuel filter and the choke heat tube at the carburetor.
3. Remove the carburetor retaining nuts; then remove the carburetor. Remove the carburetor mounting gasket, spacer (if equipped) and lower gasket from the intake manifold.

Installation

1. Clean the gasket mounting surfaces of the spacer and carburetor. Place the spacer between two new gaskets and position the spacer and gaskets on the intake manifold. Position the carburetor on the spacer and gasket and secure it with the retaining lockwashers and nuts. To prevent leakage, distortion or damage to the carburetor body flange, snug the nuts; then, alternately tighten each nut in a criss-cross pattern to the specified torque.
2. Connect the in-line fuel filter throttle cable, choke heat tube and distributor vacuum line.
3. Adjust the engine idle speed, the idle fuel mixture and the accelerating pump stroke (if required). Install the air cleaner.

AIR HORN TO MAIN BODY GASKET

Removal

1. Remove the air cleaner. Remove the air cleaner anchor screw.
2. Disconnect the automatic choke clean air tube at the carburetor.
3. Remove the automatic choke plate operating rod to choke lever retainer.
4. Remove the air horn attaching screws and lock washers, and the carburetor identification tag. Remove the air horn gasket.

Installation

1. Install a new air horn to main body gasket. **Make sure all holes in the new gasket have been properly punched and that no foreign material has adhered to the gasket.**
2. Position the air horn on the main body and gasket so that the choke plate operating rod fits into the opening in the choke housing lever. Install the choke plate rod retainer.
3. Install the air horn attaching screws and lock washers and the identification tag. Install the air cleaner anchor screw, and tighten to the specified torque.
4. Connect the automatic choke clean air tube to the carburetor.
5. Adjust the idle fuel mixture and idle speed and the dashpot as outlined in this Section.
6. Install the carburetor air cleaner assembly.

FLOAT, NEEDLE VALVE AND SEAT, INLET SCREEN OR MAIN JETS

Removal

1. Remove the carburetor air horn to main body gasket by following the procedure under Air Horn to Main Body Gasket Replacement.
2. With the use of a screwdriver, pry the float shaft retainer from the fuel

inlet seat. Remove the float, float shaft retainer and fuel inlet needle assembly.

3. If required, remove the fuel inlet needle seat, filter screen and the main jets with a jet wrench. **Be sure the correct (specified) jets are installed.**

Installation

1. If required, install the fuel inlet filter in the inlet valve seat bore. Install the valve seat and gasket. Install the fuel inlet needle valve.
2. Slide the float shaft into the float lever. Position the float shaft retainer on the float shaft.
3. Insert the float assembly into the fuel bowl and hook the float lever tab under the fuel inlet needle clip. Insert the float shaft into the guides at the sides of the fuel bowl.
4. With the use of a screwdriver, position the float shaft retainer on the groove of the fuel inlet needle seat.
5. Refer to Float Adjustment—Dry, and perform a dry float fuel level adjustment on the float.
6. Install the carburetor air horn and gasket and related parts. Refer to Air Horn to Main Body Gasket Replacement.
7. Refer to Fuel Level Float Adjustment—Wet, and perform the wet fuel level adjustment procedures.
8. Adjust the idle fuel mixture and engine idle speed.

ACCELERATING PUMP DIAPHRAGM AND/OR ELASTOMER VALVE

Removal

1. Remove the carburetor air horn to main body gasket following the procedure under Air Horn to Main Body Gasket Replacement.
2. Remove the accelerating pump operating rod retainer. To release the rod from the retainer, press the tab ends of the clip together; then, at the same time, press the rod away from the clip until it is disengaged. Remove the rod. Remove the accelerating pump cover, diaphragm assembly and spring.
3. If inspection proves it necessary to remove the Elastomer valve, grasp it firmly and pull it out. **If the Elastomer valve tip broke off during removal, be sure to remove the tip from the fuel bowl. An Elastomer valve must be replaced whenever it is removed from the main body.**

Installation

1. If the Elastomer valve was removed, lubricate the tip of a new valve and insert the tip into the accelerator pump cavity. Using needle nosed pliers, reach into the fuel bowl and grasp the valve tip. Pull the valve in until it seats, and cut off the tip forward of the retainer shoulder. Remove the tip from the bowl.
2. Position the new accelerating pump diaphragm assembly to the cover and place the cover and diaphragm assembly in position on the return spring and main body. **The large end of the spring must face the Elastomer valve.** Install the cover screws finger-tight. Push the accelerating pump plunger the full length of travel and tighten the cover screws.
3. Position the accelerating pump operating rod in the inboard hole (hole closest to the pump plunger).
4. Adjust the accelerating pump stroke to specification.
5. Install the carburetor air horn and gasket. Refer to the Air Horn to Main Body Gasket Replacement.

CHOKE DIAPHRAGM ASSEMBLY

Removal

1. Remove the air cleaner.
2. Remove the diaphragm cover attaching screws, then lift the cover, diaphragm assembly and spring from the air horn (Fig. 19).**It will not be necessary to remove the diaphragm stop screw on the underside of the air horn.**
3. Remove the diaphragm rod from the end of the lever.

Installation

1. Position the diaphragm spring in the air horn. Place the cover on top of the diaphragm, then attach the diaphragm rod to the end of the lever.
2. Install the cover attaching screws and tighten to the specified torque.
3. Set the choke plate pulldown and fast idle cam clearance.
4. Tighten the air cleaner anchor screw to the specified torque to help provide a vacuum seal between the air horn and main body. **The choke diaphragm vacuum passage is in the rear portion of the carburetor.**
5. Install the air cleaner.

IDLE LIMITER CAPS

Removal

1. Remove the carburetor.
2. Remove the plastic limiter caps by cutting with side-cutter pliers and knife. After the cut is made, carefully pry the limiter apart, then remove them from the idle fuel adjustment screws.

Installation

1. Install the carburetor.
2. Set the carburetor to the correct idle air-fuel ratio, using the exhaust gas analyzer.
3. When the idle air-fuel ratio is within specifications, install a colored plastic service limiter cap.

When installing the limiter cap use care not to turn the idle mixture screws with the caps. Position the caps so that they are in the maximum counterclockwise position with the tab of the limiter against the stop of the carburetor.

The idle mixture adjusting screws will then be at the maximum allowable outward, or rich, setting.

To install the service limiter cap, use a straight, forward pushing force with a 3/8-inch drift or socket wrench extension.

4. Recheck the air-fuel ratio with the air cleaner installed, using the exhaust gas analyzer to make sure the limiter caps are properly installed.

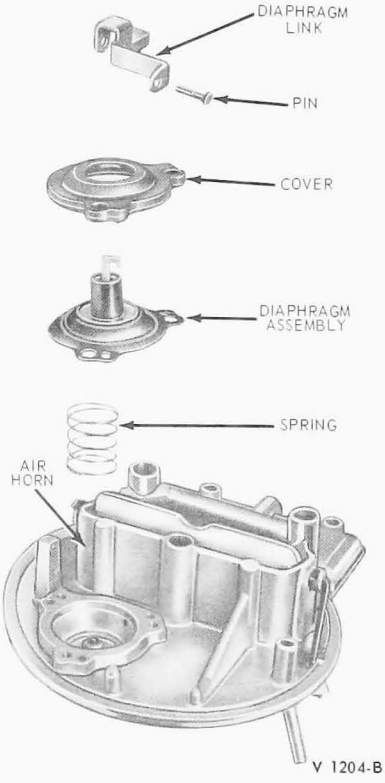

FIG. 19 Choke Diaphragm Assembly

MAJOR REPAIR OPERATIONS

DISASSEMBLY

To facilitate working on the carburetor, and to prevent damage to the throttle plates, install carburetor legs on the base. If legs are unavailable, install 4 bolts (about 2 1/4 inches long of the correct diameter) and 8 nuts on the carburetor base.

Use a separate container for the component parts of the various assemblies to facilitate cleaning, inspection and assembly.

Refer to Part 24-01 for Cleaning and Inspection.

The following is a step-by-step sequence of operations for completely overhauling the carburetor. However certain components of the carburetor may be serviced without a complete disassembly of the entire unit. For a complete carburetor overhaul, follow all of the steps. To partially overhaul a carburetor or to install a new gasket kit, follow only the applicable steps.

AIR HORN

1. Remove the air cleaner anchor screw.
2. Remove the automatic choke control rod retainer.
3. Remove the air horn attaching screws, lock washers and the carburetor identification tag. Remove the air horn and air horn gasket.
4. Remove the choke control rod by loosening the screw that secures the choke shaft lever to the choke shaft. Remove the rod from the air horn. Slide the plastic dust seal out of the air horn.
5. Remove the choke diaphragm assembly (Fig. 19).
6. If it is necessary to remove the choke plate, remove the staking marks on the choke plate attaching screws and remove the screws. Remove the choke plate by sliding it out of the shaft from the top of the air horn. Slide the choke shaft out of the air horn.

If the tips of the choke plate screws are flared excessively, file off the flared portion to prevent damage to the threads in the shaft.

AUTOMATIC CHOKE

1. Remove the fast idle cam retainer (Fig. 20).
2. Remove the thermostatic choke spring housing attaching screws and remove the clamp, housing and gasket.
3. Remove the choke housing assembly attaching screws. If the air horn was not previously removed, remove the choke control rod retainer. Remove the choke housing assembly, gasket and the fast idle cam and rod from the fast idle cam lever.
4. Remove the choke lever attaching screw and washer. Remove the choke lever and fast idle cam lever from the choke housing.

MAIN BODY

1. With the use of a screwdriver, pry the float shaft retainer from the fuel inlet seat (Figs. 21 and 22). Remove the float, float shaft retainer and fuel inlet needle assembly. Remove the retainer and float shaft from the float lever.

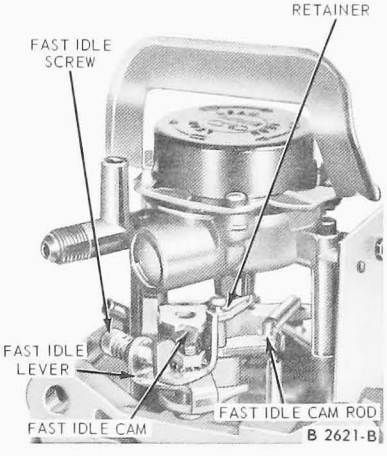

FIG. 20 Fast Idle Cam and Fast Idle Lever

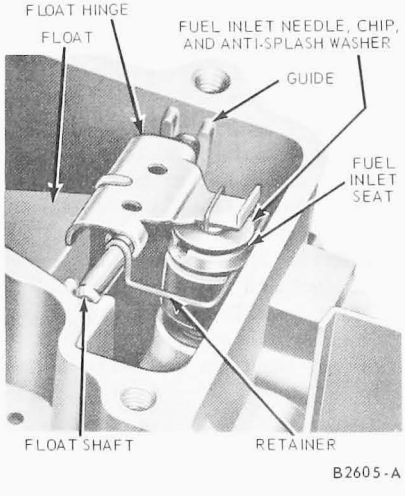

FIG. 21 Float Assembly

2. Remove the fuel inlet needle, seat, filter screen, and the main jets with a jet wrench.
3. Remove the booster venturi screw (accelerator pump discharge), air distribution plate, booster venturi and gasket. Invert the main body and let the accelerating pump discharge weight and ball fall into the hand.

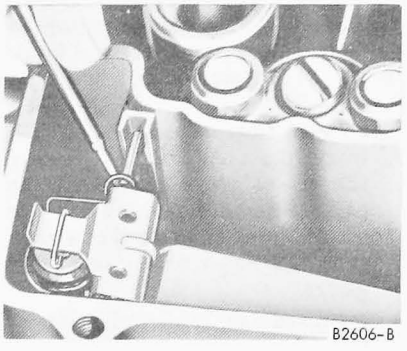

FIG. 22 Removing or Installing Float Shaft Retainer

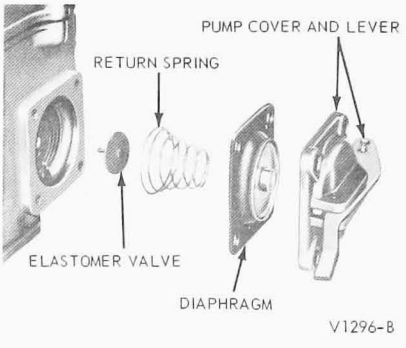

FIG. 23 Accelerating Pump Assembly

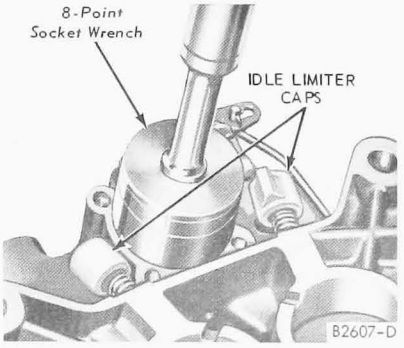

FIG. 24 Removing or Installing Power Valve Discard the gasket.

4. Remove the accelerator pump operating rod from the over-travel lever and the retainer. **To release the operating rod from the over-travel lever retainer, press the ends of the retainer together; then, at the same time, press the rod away from the retainer until it is disengaged.** Remove the rod and retainer.
5. Remove the accelerating pump cover attaching screws. Remove the accelerating pump cover, diaphragm assembly and spring (Fig. 23).
6. If it is necessary to remove the Elastomer valve, grasp it firmly and pull it out. If the Elastomer valve tip broke off during removal, be sure to remove the tip from the fuel bowl. **An Elastomer valve must be replaced whenever it has been removed from the carburetor.**
7. Invert the main body and remove the power valve cover and the gasket. Remove the power valve with a box wrench or socket wrench (Fig. 24). Remove the power valve gasket.
8. Remove the idle fuel mixture adjusting screws (needles) and the springs. Remove the limiters from the adjusting screws.
9. If necessary, remove the nut and washer securing the fast idle adjusting lever assembly to the throttle shaft, and remove the lever assembly if necessary, remove the idle screw and the retainer from the fast idle adjusting lever.
10. Remove the anti-stall dashpot or solenoid (if so equipped).
11. If it is necessary to remove the throttle plates, lightly scribe the throttle plates along the throttle shaft, and mark each plate and its corresponding bore with a number or letter for proper installation (Fig. 25).
12. Slide the throttle shaft out of the main body.

Clean and inspect the carburetor component parts. Refer to Part 24-01 for the proper procedure.

ASSEMBLY

Make sure all holes in the new gaskets have been properly punched and that no foreign material has adhered to the gaskets. Make sure the accelerating pump diaphragm is not torn or cut.

The Model 2100-D 2-V carburetor assembly is shown in Fig. 26.

MAIN BODY

1. Slide the throttle shaft assembly into the main body.
2. Refer to the lines scribed on the throttle plates and install the throttle plates in their proper location with the screws snug, but not tight.
3. Close the throttle plates. Invert the main body, and hold it up to the light. Little or no light should show between the throttle plates and the throttle bores. Tap the plates lightly with a screwdriver handle to seat them. Hold the throttle plates closed and tighten and stake the attaching screws. **When staking the screws, support the shaft and plate on a block of wood or a metal bar to prevent bending of the shaft.**
4. If necessary, install the fast idle screw pin and the screw on the fast idle adjusting lever.
5. Install the anti-stall dashpot, if so equipped.
6. If the fast idle lever was removed, place the fast idle adjusting lever assembly on the throttle shaft and install the retaining washer and nut (Fig. 26).
7. If the Elastomer Valve was removed, lubricate the tip of a new Elastomer valve and insert the tip into the accelerator pump cavity center hole. Using a pair of needle nosed pliers, reach into the fuel bowl and grasp the valve tip. Pull the valve in until it seats in the pump cavity wall and cut off the tip forward the retaining shoulder. Remove the tip from the bowl.
8. Install the accelerating pump diaphragm return spring on the boss in the chamber (Fig. 23). Insert the diaphragm assembly in the cover and place the cover and diaphragm assembly into position on the main body. Install the cover screws.
9. Insert the accelerating pump operating rod into the inboard hole of the accelerating pump actuating lever. Position the accelerating pump operating rod retainer over the specified hole in the over-travel lever. Press the end of the retainer together; then, at the same time, insert the operating rod through the retainer and the hole in the over-travel lever. Release the ends of the retainer to secure the rod.
10. Invert the main body. Install the power valve (enrichment valve) and new gasket with a wrench (Fig. 24). **Tighten the valve securely.**
11. Install the idle mixture adjusting screws (needles) and springs (Fig. 26). Turn the needles in gently with the fingers until they just touch the seat, then back them off 1 1/2 turns for a preliminary idle fuel mixture adjustment. **Do not install the idle mixture limiters at this time.** Install the power valve cover and new gasket. **The power valve cover must be installed with the limiter stops on the cover in position to provide a positive stop for the tabs on the idle adjusting limiters.**
12. Install the main jets and the fuel inlet seat, filter screen, and new gasket. **Be sure the correct jets are installed.**
13. Install the fuel inlet needle assembly in the fuel inlet seat. Fuel inlet needles and seats are matched assemblies. **Be sure the correct needle and seat are assembled together.**
14. Slide the float shaft into the float lever (Fig. 21). Position the float shaft retainer on the float shaft.
15. Insert the float assembly into the fuel bowl and hook the float lever tab under the fuel inlet needle assembly. Insert the float shaft into its guides at the sides of the fuel bowl.
16. With the use of a screwdriver, position the float shaft retainer in the groove on the fuel inlet needle seat (Fig. 22). Check the float setting.
17. Drop the accelerating pump discharge ball into the passage in the main body. Seat the ball with a brass drift and a light hammer. **Make sure**

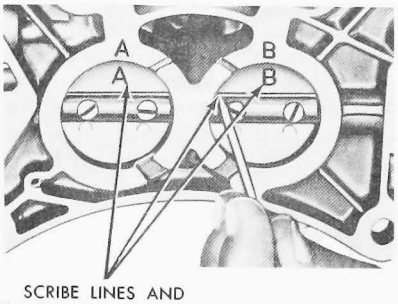

SCRIBE LINES AND IDENTIFICATION MARKS

B1363-C

FIG. 25 Throttle Plates

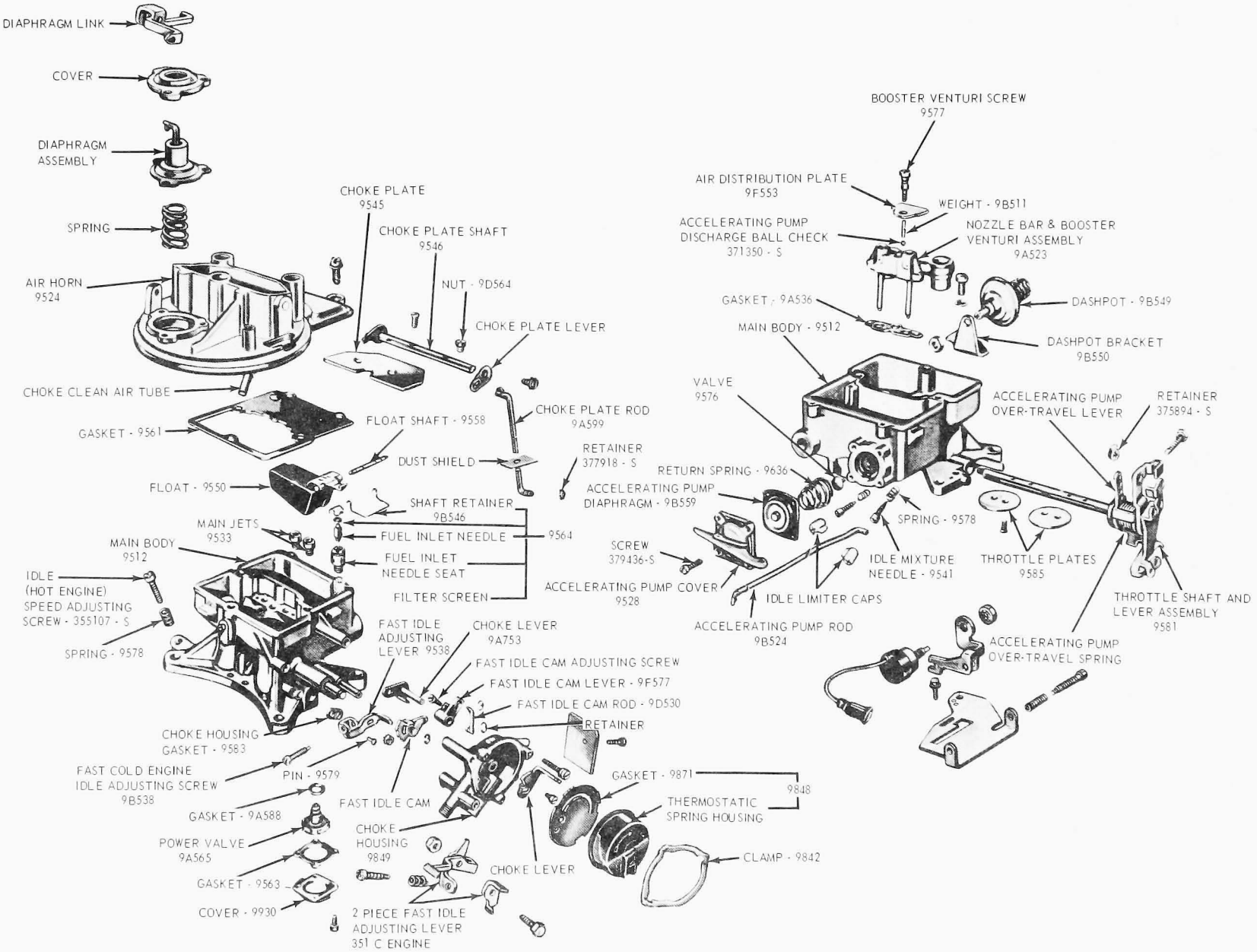

V 1137- D

FIG. 26 Model 2100-D 2-V Carburetor

the ball is free in the bore. Drop the accelerating pump discharge weight on top of the ball. Position the new booster venturi gasket and the booster venturi in the main body. Install the air distribution plate and the accelerator pump discharge screw. Tighten the screw.

AUTOMATIC CHOKE

1. Position the fast idle cam lever on the thermostatic choke shaft and lever assembly. **The bottom of the fast idle cam lever adjusting screw must rest against the tang on the choke lever.** Position the teflon bushing around the choke lever shaft. Insert the choke lever into the rear of the choke housing. Position the choke lever so that the hole in the lever is to the left side of the choke housing. Connect the thermostatic choke lever to the choke shaft.
2. Install the fast idle cam rod into the fast idle cam lever. Place the fast idle cam on the fast idle cam rod and install the retainer. Place the choke housing vacuum pick-up port to main body gasket on the choke housing flange. Position the choke housing on the main body and at the same time, install the fast idle cam on the hub on the main body. Position the gasket, and install the choke housing attaching screws. Install the fast idle cam retainer. Install the thermostatic spring housing.

AIR HORN

Refer to Fig. 23 for the correct location of the parts.

1. If the choke plate shaft was removed, position the shaft in the air horn, then install the choke plate rod on the end of the choke shaft.
2. If the choke plate was removed, insert the choke plate into the choke plate shaft. Install the choke plate screws snug, but not tight. Check for proper plate fit, binding in the air horn and free rotation of the shaft by moving the plate from the closed position to the open position. If necessary, remove the choke plate and grind or file the plate edge where it is binding or scraping on the air horn wall. If the choke plate and shaft moves freely, tighten the choke plate screws while holding the choke in the fully closed position. Stake the screws. **When staking the screws, support shaft and plate on a block of wood or a metal bar to prevent bending of the shaft.**
3. Position the main body gasket and the choke rod plastic seal on the main body. Position the air horn on the main body and gasket so that the choke plate rod fits through the seal and the opening in the main body.
4. Insert the end of the choke plate rod into the automatic choke lever. Install the air horn attaching screws and the carburetor identification tag. Tighten the attaching screws. Install the choke plate rod retainer. Install the air cleaner anchor screw. Tighten the air cleaner anchor screw to the specified torque.
5. Perform the automatic choke plate clearance adjustment after the carburetor has been installed on the vehicle. **Perform the required performance adjustments.**
6. After the specified air-fuel is obtained, install the idle mixture limiter caps.

PART 24-12 Model 2300 2-V Carburetor

Applies To 330 and 361 Engines Only

COMPONENT INDEX	Page
ACCELERATING PUMP DIAPHRAGM	
Removal and Installation	12-06
ACCELERATING PUMP LEVER ADJUSTMENT	12-03
ACCELERATING PUMP STOKE ADJUSTMENT	12-03
CARBURETOR	
Description	12-01
Removal and Installation	12-05
FAST IDLE SPEED ADJUSTMENT	
Initial Setting	12-03
Final Setting	12-03
FLOAT	
Removal and Installation	12-06
FLOAT LEVEL ADJUSTMENT	
Dry	12-04
Wet	12-04

COMPONENT INDEX	Page
FUEL BOWL AND METERING BLOCK	
Disassembly and Assembly	12-06
Removal and Installation	12-05
FUEL ENRICHMENT SYSTEM ADJUSTMENT	12-04
FUEL INLET NEEDLE AND SEAT	
Removal and Installation	12-06
GOVERNOR	
Description	12-01
Disassembly and Assembly	12-07
MAIN BODY	
Disassembly and Assembly	12-06
MAIN JET	
Removal and Installation	12-05
POWER VALUE AND GASKET	
Removal and Installation	12-05
THROTTLE BODY	
Disassembly and Assembly	12-07
THROTTLE SHAFT HOUSING	
Disassembly and Assembly	12-07

DESCRIPTION

CARBURETOR

The Model 2300 2-V carburetor used on the 330 and 361 CID engines (Fig. 1) has four main assemblies. They are the main body, throttle body, metering block and the fuel bowl. The fuel passages are identified in Fig. 2.

Vehicles equipped with a Model 2300 carburetor have a modulated power valve system. When the throttle plates are closed, the passage to the power valve is shut off. As the throttle plates open, a passage drilled in the throttle plate shaft begins to align with the passage in the main body to partially open the valve. As power demand increases, the passage in the shaft continues to align with the power valve passage until it is fully open at approximately 50 degrees of throttle plate travel.

A manual choke is used on all vehicles.

GOVERNOR

The operation of the throttle actuating unit of the vacuum operated governor system which is installed on the carburetor, is covered in Part 23-20.

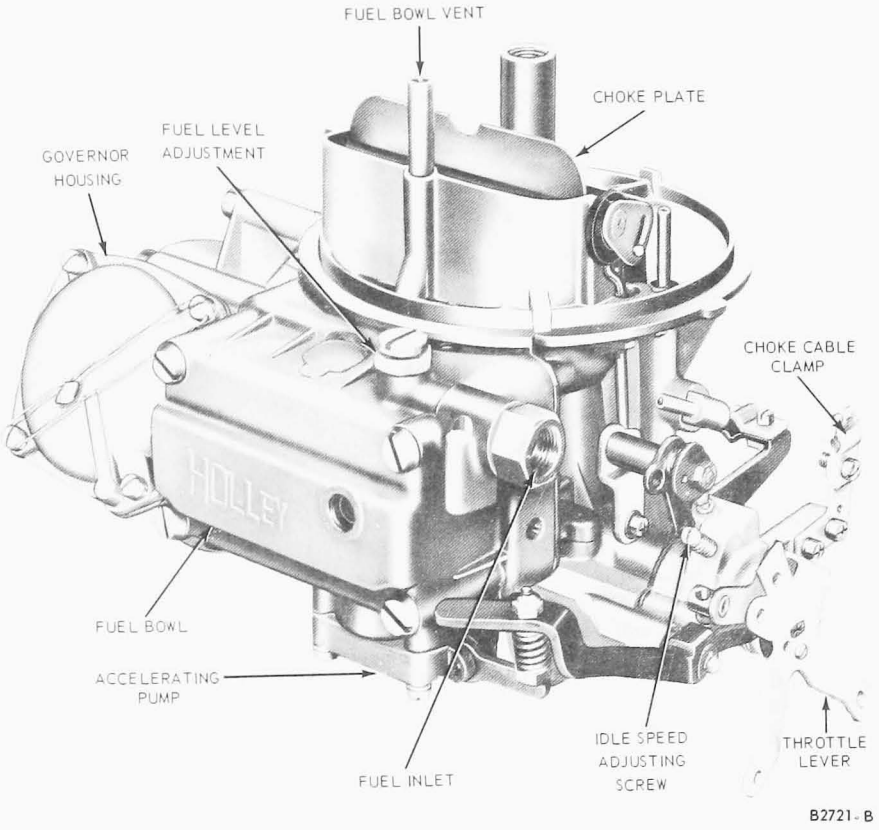

FIG. 1 Model 2300 2-V Carburetor for the 330 and 361 CID Engines Left Front View

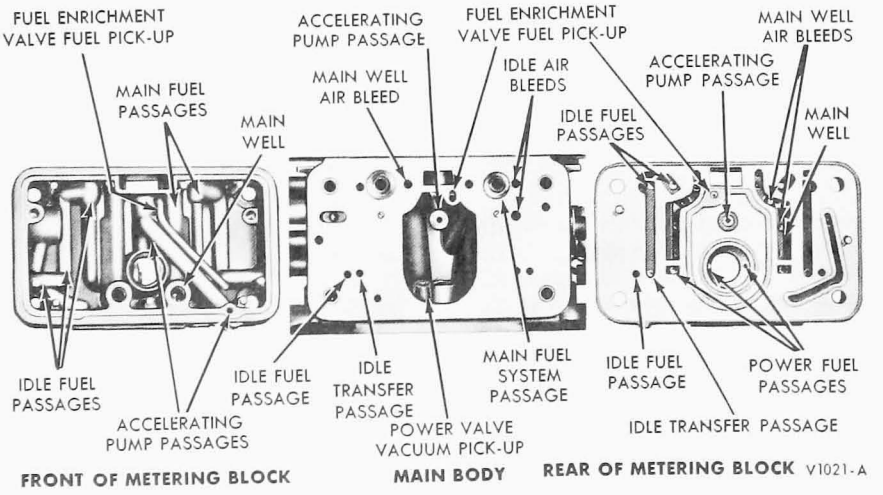

FIG. 2 Fuel Passages Identification

ADJUSTMENTS

FAST IDLE SPEED—INITIAL SETTING

If the carburetor was removed from the vehicle for replacement or overhaul procedures, it is recommended that an initial fast idle adjustment be performed as follows.

1. With the throttle plates closed and the choke plate wide open, measure the clearance between the fast idle cam and the fast idle screw (Fig. 3).
2. If the clearance is not to specifications, turn the fast idle screw the required amount to increase or decrease the clearance. A 1/4 turn in or out will alter the clearance by approximately 0.008 inch.

FAST IDLE SPEED—FINAL SETTING

A hand (cable) operated throttle control has been provided for the engines in various vehicle models and series. The throttle is actuated by a knob, located on the instrument panel. The hand operated throttle control is useful for maintaining constant engine speed when running power take-off equipment or when performing certain service operations.

The fast (cold engine) idle speed is adjusted with the hand throttle control knob pushed fully inward. The idle (hot engine) speed must be adjusted to specifications before the fast idle speed can be adjusted.

The fast idle speed adjustment screw for the carburetor is located in the throttle operating housing (Fig. 3).

The fast idle adjustment screw contacts the fast idle cam during the engine warm-up period and controls the fast (cold engine) idle speed.

1. Adjust the idle (hot engine) speed and mixture to specifications before attempting to set the fast (cold engine) idle speed. **The fast idle speed adjustment is made with the engine at normal, stabilized operating temperature.**
2. With the engine operating and a tachometer attached to the engine, disconnect the choke cable housing from the choke cable bracket clamp. Pull the choke cable housing rearward until the choke plate operating lever is against the stop on the choke cable bracket. **Hold the choke plate open to the choke pulldown limit, to keep the engine running.**

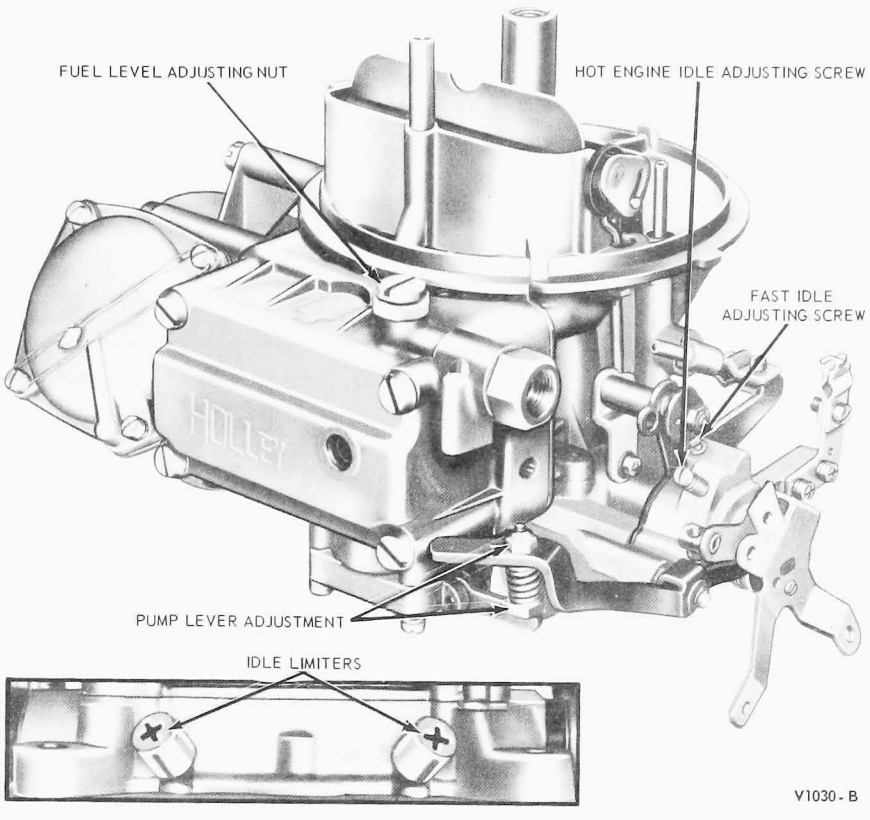

FIG. 3 Carburetor Adjustments

3. Check the fast (cold engine) rpm. If the idle rpm is not to specification, turn the fast idle screw clockwise with a 3/16 inch wrench to decrease the engine rpm or counterclockwise to increase the rpm.
4. Turn off the engine and remove the tachometer.
5. Push the choke lever, cable and housing forward to the full choke position and clamp the choke cable housing to the choke cable bracket.
6. Install the air cleaner assembly if other adjustments are not required.

ACCELERATING PUMP LEVER ADJUSTMENT

1. Using a feeler gauge and with the throttle plates in the wide open position, there should be the specified clearance between the accelerating pump operating lever adjustment screw head and the pump arm when the pump arm is depressed manually (Fig. 4).
2. If adjustment is required, loosen the adjusting screw lock nut and turn the adjusting screw into increase the clearance and out to decrease the clearance. **One half turn of the adjusting screw is equal to approximately 0.015 inch.** When the proper adjustment has been obtained hold the adjustment screw in position with a wrench and tighten the lock nut.
3. Perform an accelerating pump stroke adjustment, if required.

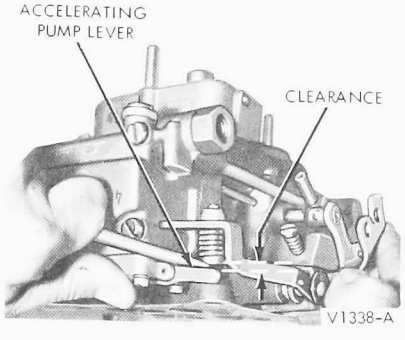

FIG. 4 Accelerating Pump Lever Clearance

ACCELERATING PUMP STROKE ADJUSTMENT

The accelerating pump stroke has been set to help keep the exhaust

emission level of the engine within the specified limits. The additional holes provided for pump stroke adjustment are for adjusting the stroke for specific engine applications. **The stroke should not be changed from the specified setting.**

If the pump stroke has been changed from the specified setting refer to the following instructions to correct the stroke to specifications.

If a change in the adjustment is required, make certain the proper hole (top or bottom) in plastic accelerating pump cam, located behind the throttle lever, is properly aligned (indexed) with the numbered hole (top or bottom) in the throttle lever before installing the retaining screw.

FUEL ENRICHMENT SYSTEM ADJUSTMENT

The following procedure is to be performed only when there is engine backfire.

1. Operate the engine until normal operating temperature has been reached, then turn the engine off.
2. Remove the air cleaner assembly. Install a manifold vacuum gauge and a tachometer on the engine.
3. Turn the fuel enrichment piston adjusting screw in (clockwise) until the head of the screw is flush with the cast boss (Fig. 5). This is to assure that the piston is in the open position.
4. Start the engine and adjust the engine idle speed and idle fuel mixture to obtain the best possible idle smoothness and the maximum intake manifold vacuum possible at the specified idle (hot engine) rpm. Record the vacuum reading.
5. Slowly turn the fuel enrichment adjusting screw out (counterclockwise) until the manifold vacuum drops and/or the engine begins to run rough. This will occur when the lowered spring tension allows the piston to close.
6. Turn the adjusting screw in an additional number of turns, as specified in Fig. 6, according to the maximum manifold vacuum reading recorded in Step 4.
7. Remove the test instruments, install the air cleaner assembly and road test the vehicle for proper anti-backfire control. Decelerate the engine from the highest legal speed limit available to 20 mph, with the transmission in high gear.

If popping is still evident, turn the piston adjusting screw outward (counterclockwise), in increments of 1/4 turn. Repeat the deceleration test after each adjustment until popping noises are no longer evident, or until the adjusting screw has been backed out to within 1/2 turn of the additional turns made in Step 6. For example, if the screw was turned inward 2 turns in Step 6, then it is permissible to turn the screw outward up to 1 1/2 turns when testing for popping. **Do not back the screw out far enough to affect engine idle.**

8. If popping cannot be eliminated following this procedure, then the cause is elsewhere in the exhaust system or in the carburetor metering systems.

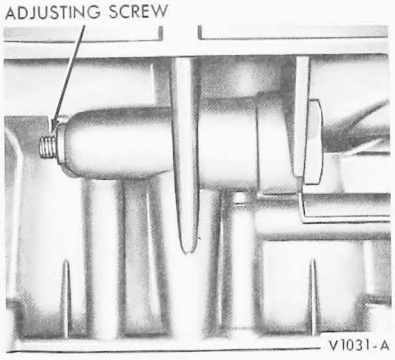

FIG. 5 Fuel Enrichment System Adjustment

Vacuum Reading	Number of Turns on Screw
17.0	2-1/2
17.5	2
18.0	1-1/2
18.5	1
19.0	1/2
Above 19.0	1/2

CV1339-A

FIG. 6 Fuel Enrichment Adjusting Data

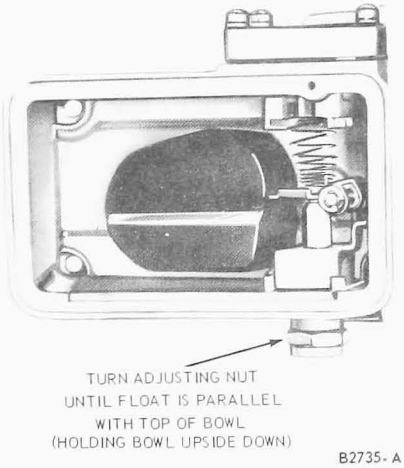

FIG. 7 Adjusting Float—Dry

FUEL LEVEL FLOAT ADJUSTMENT—DRY

The dry float adjustment is a preliminary fuel level adjustment only. The final adjustment (Fuel Level Float Adjustment—Wet) must be performed after the carburetor is installed on the engine.

With the fuel bowl and float assembly removed, adjust the float so that the float is parallel to the fuel bowl, with the top of the fuel bowl inverted (Fig. 7).

FUEL LEVEL ADJUSTMENT—WET

The fuel pump pressure and volume must be to specifications prior to performing the following adjustments.

1. Operate the engine to normalize engine temperatures and place the vehicle on a flat surface, as near level as possible. Stop the engine and remove the air cleaner, if it was not previously removed.
2. Check the fuel level in each fuel bowl separately (Fig. 8). **Place a suitable container below the fuel level sight plug in the fuel bowl to collect any spillover of fuel. Carefully remove the fuel level sight plug and gasket.**
3. If the fuel level is satisfactory, install the sight plug.
4. If the fuel level is too high, drain the fuel bowl and refill it. To drain the fuel bowl, loosen one lower retaining bolt from the fuel bowl and drain the fuel into a suitable container. Check the fuel level again before altering the float setting. **This will eliminate the possibility of foreign material causing a temporary flooding condition. Install the bolt and the fuel level sight plug, and start the engine to fill the fuel bowl. After the fuel level has stabilized, stop the engine and check the fuel level.**

If the fuel level is still too high, it should first be lowered below specifications and then raised until it is just at the lower edge of the sight plug opening. If the fuel level is too low, it is only necessary to raise it to the specified level. Follow the procedure under To

Lower Fuel Level or To Raise Fuel Level, whichever is applicable.

TO LOWER FUEL LEVEL

1. With the engine stopped, loosen the lock screw on top of the fuel bowl just enough to allow rotation of the adjusting nut underneath (Fig. 8). **Do not loosen the lock screw or attempt to adjust the fuel level with the sight plug removed and the engine running because the pressure in the line will spray fuel out and present a fire hazard.**
2. Turn the adjusting nut approximately 1/2 turn in to lower the fuel level below specifications (1/6 turn of the adjusting nut, depending on the direction of rotation, will raise or lower the float assembly at the fuel level sight plug opening 3/64 inch).
3. Tighten the lock screw and install the fuel level sight plug. Start the engine. After the fuel level has stabilized, stop the engine and check the fuel level at the sight plug opening. The fuel level should be below specified limits. If it is not, repeat the previous steps, turning the adjusting nut an additional amount sufficient to lower the fuel below the specified level.
4. Loosen the lock screw and turn the adjusting nut out in increments of 1/6 turn or less until the correct fuel level is achieved. After each adjustment, tighten the lock screw, install the fuel level sight plug, and then start the engine and stabilize the fuel level . Check the fuel level at the sight plug opening. Install the sight plug and gasket.
5. Install the air cleaner if other carburetor adjustments are not required.

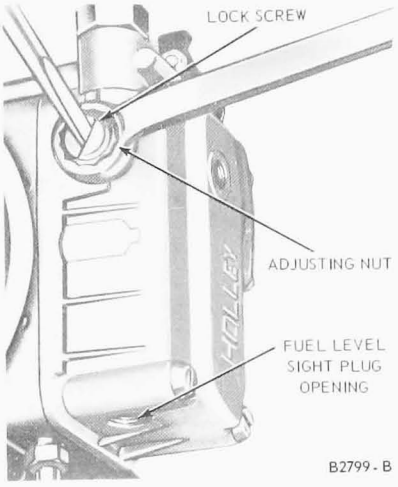

FIG. 8 Adjusting Fuel Level

TO RAISE FUEL LEVEL

Perform steps 1, 4 and 5 under the procedure, To Lower Fuel Level.

REMOVAL AND INSTALLATION

CARBURETOR

Removal

1. Remove the air cleaner. Remove the throttle rod from the throttle lever. Disconnect the choke control cable, hand throttle control cable, the distributor vacuum hose and the fuel line.
2. Disconnect the governor throttle control lines or rod at the carburetor.
3. Remove the carburetor retaining nuts and lockwashers, then remove the carburetor. Remove the spacer from the manifold.

Installation

1. Be sure all old gasket material is removed from the manifold heat riser flange, then place the spacer in position on the manifold. Position the carburetor on the manifold and install the lockwashers and nuts. Tighten the nuts alternately to specification.
2. Connect the throttle rod. Connect the choke control cable. **Be sure the end of the choke cable is bent downward to prevent interference with the bottom of the air cleaner. This interference will restrict opening of the choke plate.** Connect the hand throttle control cable, the distributor vacuum hose, the fuel line, and the governor lines or control rod. Adjust the idle speed, the primary and secondary fuel level, and the idle fuel mixture. Adjust the governor control rod.

FUEL BOWL AND GASKET AND METERING BLOCK AND GASKET

Removal

1. Remove the fuel inlet line and vacuum line.
2. Place a suitable container under the fuel bowl and drain the bowl by loosening one of the lower fuel bowl retaining screws. Remove the container.
3. Remove the four fuel bowl retaining screws.
4. Remove the fuel bowl, gasket and baffle, and metering block and gasket. Discard the gaskets.

Installation

1. If the fuel bowl or metering block is being replaced, transfer the parts.
2. Position the metering block gasket on the dowels on the back of the metering block.
3. Lay the metering block in place on the main body.
4. Position the baffle and fuel bowl gasket on the metering block.
5. Place the fuel bowl on the metering block. Use new compression gaskets on the bowl retaining screws; then install and tighten the screws.

POWER VALVE AND GASKET

Removal

1. Remove the fuel bowl and metering block.
2. Using a socket wrench, remove the power valve and gasket.
3. Discard the gasket.

Installation

1. Place a new gasket on the specified power valve.
2. Using a socket wrench, install the power valve and gasket.
3. Install the fuel bowl and metering block.

MAIN JET

1. Remove the fuel bowl and metering block.
2. Use a jet wrench to remove and install jets.
3. Install the fuel bowl and metering block.

ACCELERATING PUMP DIAPHRAGM

Removal

1. Remove the fuel bowl and metering block.
2. Remove the accelerating pump cover, diaphragm and spring.

Installation

1. Place the spring and diaphragm in the accelerating pump chamber. The diaphragm must be positioned so that the diaphragm disc protrudes from the fuel bowl.
2. Install the cover screws finger tight.
3. Make sure the diaphragm is centered, compress the diaphragm with the pump operating lever and tighten the cover screws.

FLOAT

Removal

1. Using needle nose pliers, remove the float retainer.
2. Slide the float off the shaft.
3. Remove the spring from the float.

Installation

1. Install the float spring on the float.
2. Slide the float on the shaft.
3. Install the float retainer.

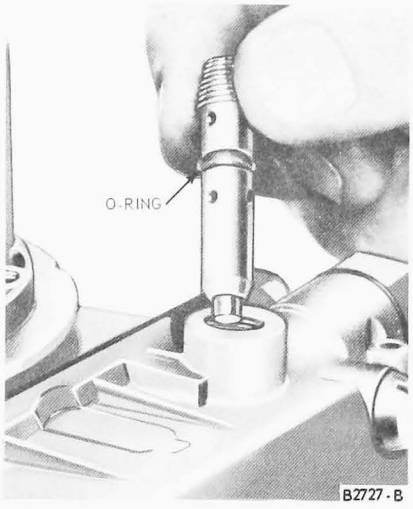

FIG. 9 Removing Fuel Inlet Needle and Seat

FUEL INLET NEEDLE AND SEAT

Removal

The fuel inlet needle and seat assembly can be replaced without removing the fuel bowl.

1. Remove the air cleaner.
2. Remove the fuel level adjustment lock screw and gasket. Turn the adjusting nut out and remove the adjusting nut and gasket. Remove the fuel inlet needle and seat assembly (Fig. 9). **Do not disassemble the fuel inlet needle and seat assembly. They are matched parts and are serviced as an assembly.**

Installation

1. Position the fuel inlet needle and seat assembly in the fuel bowl.
2. Position the adjusting nut gasket and nut on the fuel inlet needle and seat assembly. Align the flat on the ID of the nut with the flat on the OD of the fuel inlet needle and seat assembly.
3. Install the fuel level adjustment lock screw and gasket.
4. Adjust the fuel level.

DISASSEMBLY AND ASSEMBLY

DISASSEMBLY

To facilitate working on the carburetor and to prevent damage to the throttle plates, install bolts about 2 1/4 inches long of the correct diameter through the carburetor attaching bolt holes with a nut above and below the flange (or install carburetor legs).

Use a separate container for the component parts of the various assemblies to facilitate cleaning, inspection and assembly.

The following is a step-by-step sequence of operations for completely overhauling the carburetor; however, certain components of the carburetor may be serviced without disassembling the entire unit. For a complete carburetor overhaul, follow all the steps. To partially overhaul the carburetor or to install a new gasket kit, follow only the applicable steps.

FUEL BOWL AND METERING BLOCK

Refer to Fig. 10 for the correct location of the fuel bowl parts.

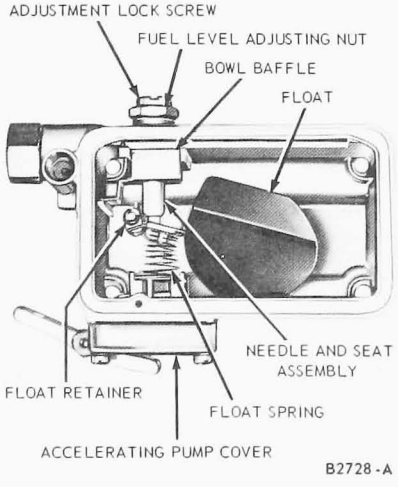

FIG. 10 Fuel Bowl

1. Remove the fuel bowl and gasket, and the metering block and gasket. Discard the gaskets.
2. Using a socket wrench, remove the power valve and gasket (Fig. 11). Discard the gasket. Using a jet wrench, remove the main jets (Fig. 12).
3. Remove the fuel level adjustment lock screw and gasket. Turn the adjusting nut counterclockwise and remove the lock nut and gasket, and the fuel inlet needle and seat assembly. **Do not disassemble the fuel inlet needle and seat. They are matched, and are replaced as an assembly.**
4. Using needle nose pliers, remove the float retainer (Fig. 13).
5. Slide the float off the shaft. Remove the spring from the float.
6. Remove the fuel level sight plug and gasket. Remove the fuel inlet fitting, gasket, and filter screen.
7. Invert the fuel bowl and remove the accelerating pump cover, diaphragm, and spring. The accelerating pump inlet ball check is not removable.

MAIN BODY

1. Remove the governor housing cover.

Remove the nut and lock washer attaching the governor lever to the throttle shaft. Remove the governor housing assembly and seal. Remove the governor housing gasket. Invert the carburetor and remove the throttle body from the main body. Disconnect the choke rod from the choke control shaft lever assembly by pushing the rod toward the main body and releasing it from the lever. Discard the throttle body gasket.

2. Remove the elastic stop nuts from the choke plate and remove the screws, flat spring, spacers, choke plate and the choke plate poppet valve. Remove the choke rod from the choke plate shaft. Slide the choke rod out of the choke shaft as the shaft is removed from the housing. Remove the choke rod seal from the main body.
3. Remove the retainers, spring seats, and springs from the poppet valve on the front of the choke plate housing. **Use caution to avoid losing the springs as they are under compression.** Remove the pins and poppet valve.
4. Remove the accelerating pump discharge nozzle from the main body.
5. Invert the main body and let the accelerating pump discharge needle fall into the hand (Fig. 14).

THROTTLE BODY

1. Remove the accelerating pump operating lever and the throttle operating shaft housing assembly and gasket. Remove the throttle operating shaft housing back-up plate and gasket.
2. If it is necessary to remove the throttle plates, lightly scribe both throttle plates along the throttle shaft and mark each throttle plate and its corresponding barrel to insure proper installation (Fig. 15). Remove the throttle plates. Remove the retainer from each end of the shaft. Slide the throttle shaft out of the throttle body.

THROTTLE OPERATING SHAFT HOUSING

1. Remove the engine idle speed adjusting screw and spring. Remove the fast idle adjusting pin and screw.
2. Loosen the throttle lever screw. Remove the throttle lever retaining pin. Remove the throttle lever and the accelerating pump cam. Remove the throttle pick-up lever and swivel assembly.
3. Remove the throttle shaft retainer and slide the throttle shaft out of the housing.

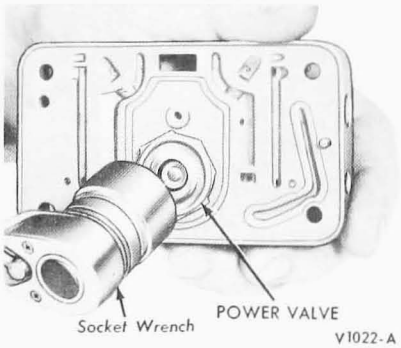

FIG. 11 Removing or Installing Power Valve

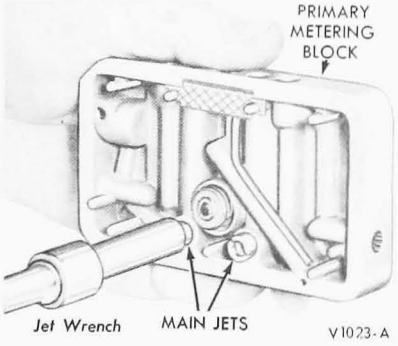

FIG. 12 Removing or Installing Main Jet

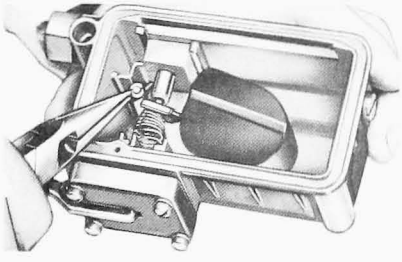

FIG. 13 Removing Float Shaft Retainer

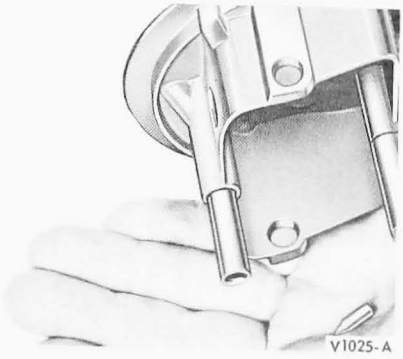

FIG. 14 Removing Acclerating Pump Discharge Needle

GOVERNOR HOUSING

1. Remove the governor spring, remove the diaphragm rod retainer and remove the governor lever.
2. Remove the governor line fitting, by-pass jets, diaphragm cover and the diaphragm.

ASSEMBLY

Make sure all holes in the new gaskets have been properly punched and that no foreign material has adhered to the gaskets. Make sure the accelerating pump diaphragm is not torn or cut. A disassembled view of the carubretor is shown in Fig. 16.

GOVERNOR HOUSING

Refer to Fig. 17 for the correct location of the parts.

1. Install the governor by-pass jets and the governor line fitting. Be sure to install the jets in their correct location. The jet ports are designated on the housing as A (lower port) and B (upper port). Refer to the specifications for the correct jet size.
2. Position the governor diaphragm in the governor housing. Install the cover, then install a new safety wire and seal.
3. Place the governor lever in the housing and position the diaphragm rod on the smallest stud of the governor lever. Install the rod retainer.

THROTTLE OPERATING SHAFT HOUSING

Refer to Fig. 18 for the correct location of the parts.

1. Slide the throttle operating lever and shaft assembly into the housing. Install the accelerating pump cam

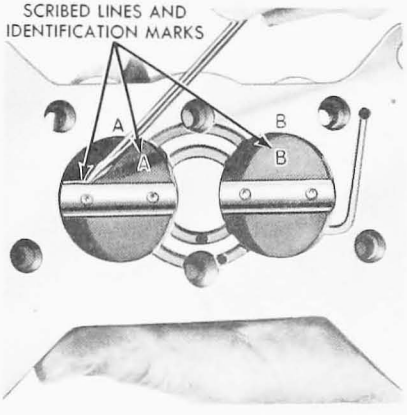

FIG. 15 Removing Throttle Plate

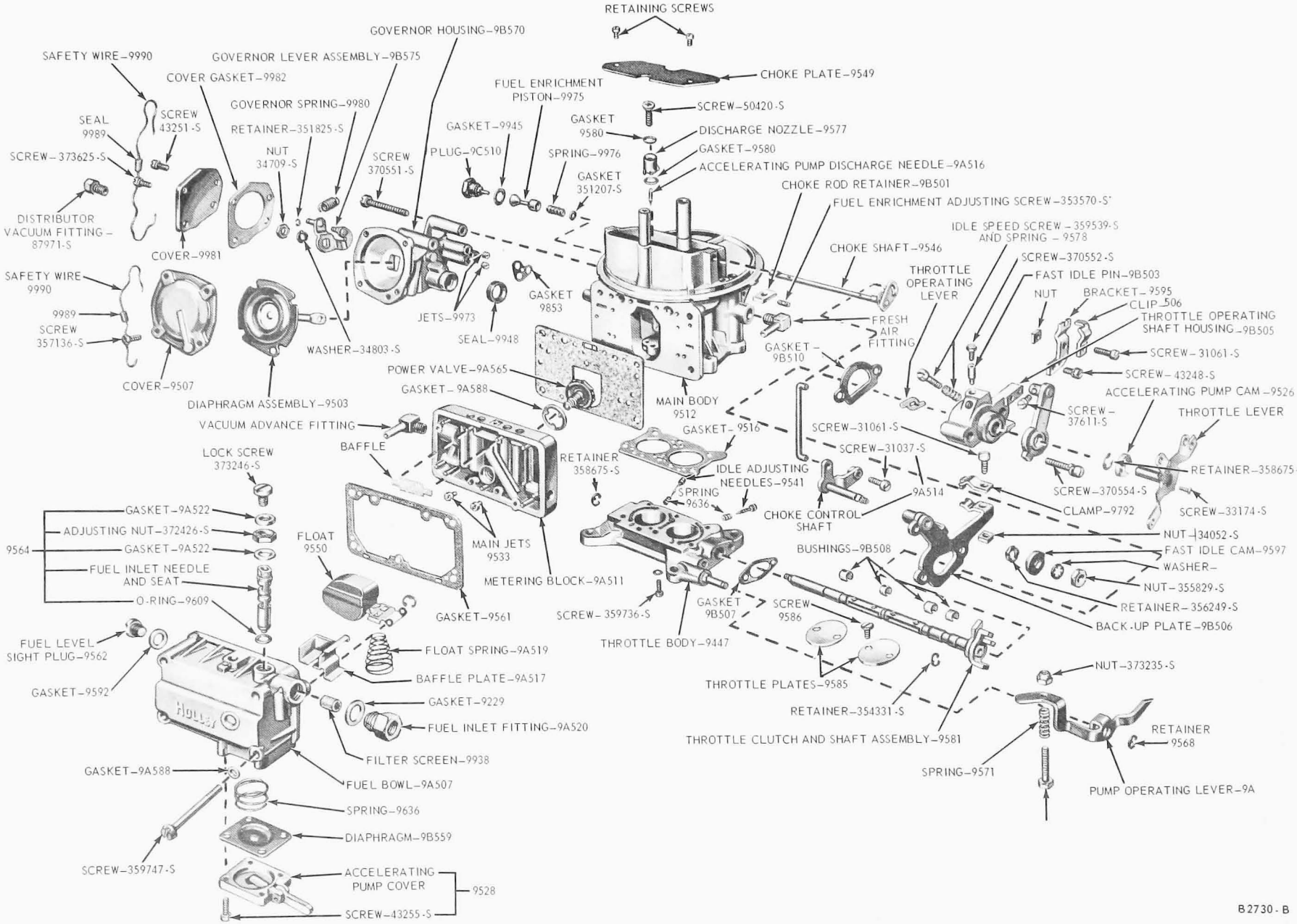

FIG. 16 Carburetor Assembly

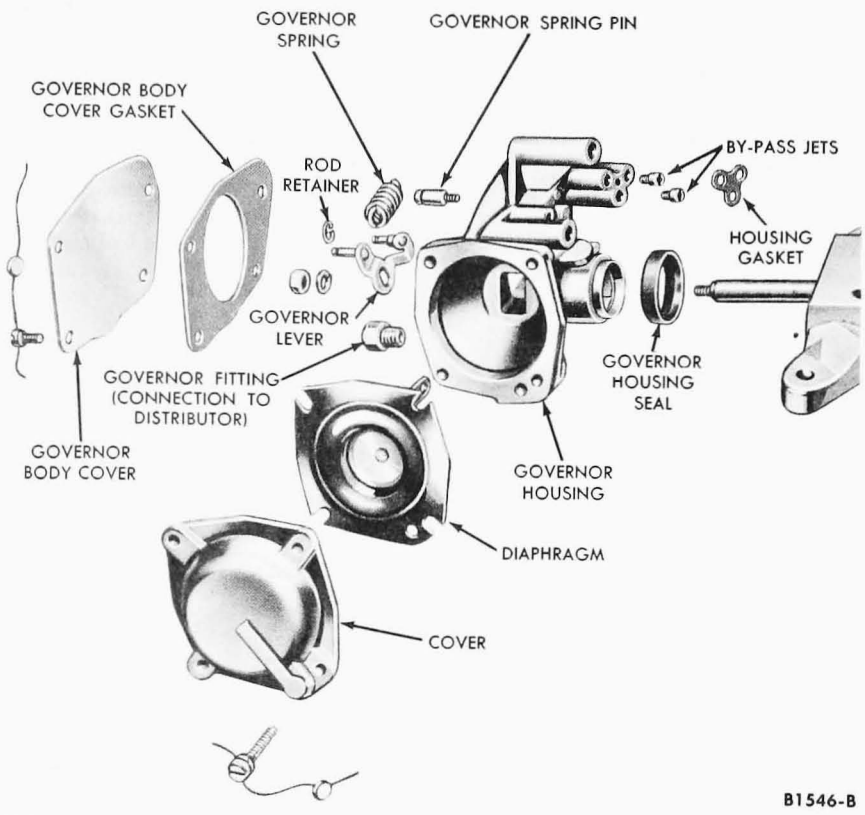

FIG. 17 Governor Housing Assembly

on the throttle lever. Position the pick-up lever and swivel assembly on the shaft.

2. Aligning the retaining pin hole in the throttle lever and shaft, position the throttle lever on the shaft. **Be sure the throttle lever can be rotated from the full open position to the full closed position. Install the throttle lever retaining pin. Install the throttle lever screw.**
3. Install the engine idle speed adjusting screw and spring. Install the fast idle adjusting pin and screw.

THROTTLE BODY

Refer to Fig. 19 for the correct locations of the parts.

1. If the throttle plates were removed, position the bushings on the throttle shaft and slide them into the throttle body. Install the retainer on each end of the shaft. Referring to the lines scribed on the throttle plates, install the plates in their proper location with the screws snug, but not tight. Close the throttle plates and hold the throttle body up to the light. Little or no light should show between the throttle plates and the throttle bores. If the throttle plates are properly installed and there is no

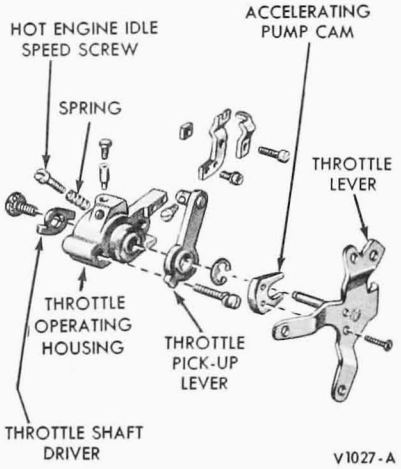

FIG. 18 Throttle Operating Shaft Assembly

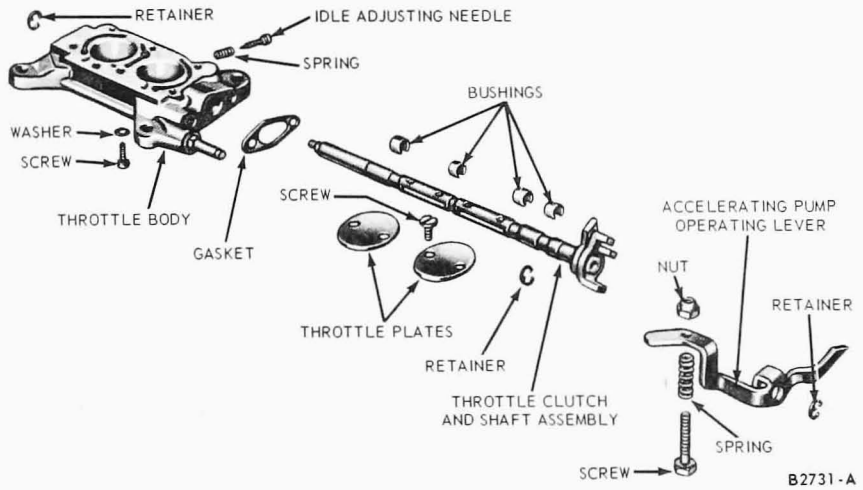

FIG. 19 Throttle Body Assembly

binding when the throttle shafts are rotated, tighten and stake the throttle plate screws.
2. Position the throttle operating shaft housing back-up plate assembly gasket and plate assembly on the throttle body by sliding them over the clutch lever on the throttle shaft.
3. Insert the throttle operating housing attaching screws in the housing. Slide the housing gasket over the screws.
4. Open the throttle plates and install the throttle operating housing on the throttle body. **If the housing is correctly installed, the throttle lever will close the throttle plates, but will not open them.**
5. Install the accelerating pump lever on the throttle body.
6. Install the idle adjusting needles and springs. Turn the needles in gently until they touch the seat, then back them out 1 -1 1/2 turns.

MAIN BODY

1. Drop the accelerating pump discharge needle into the well (Fig. 20). Seat the needle with a brass drift and a light hammer. Make sure it is free. Position the accelerating pump discharge nozzle gasket and nozzle in the main body; then install the attaching screw and gasket.
2. Place the choke rod seal in the groove located on the underside of the carburetor air cleaner flange.
3. Working from the underside of the carburetor air cleaner flange, slide the choke rod (with the small upset end of the top) through the opening in the main body and rod seal.
4. Place the air horn poppet valve in position on the main body. From inside the air horn, insert the pins through the main body and poppet valve. Install the spring, spring seats, and retainers.
5. Position the choke plate shaft in the air horn. Position the choke rod in the choke plate shaft lever and override spring.
6. Position the choke plate poppet valve over the retaining screws, then position the choke plate on top of the poppet valve.
7. Place the spacers over the screws, then position the flat spring over the screws so that the curved portion is down. Install the attaching nuts.
8. Invert the main body and position the gasket on the main body. Place

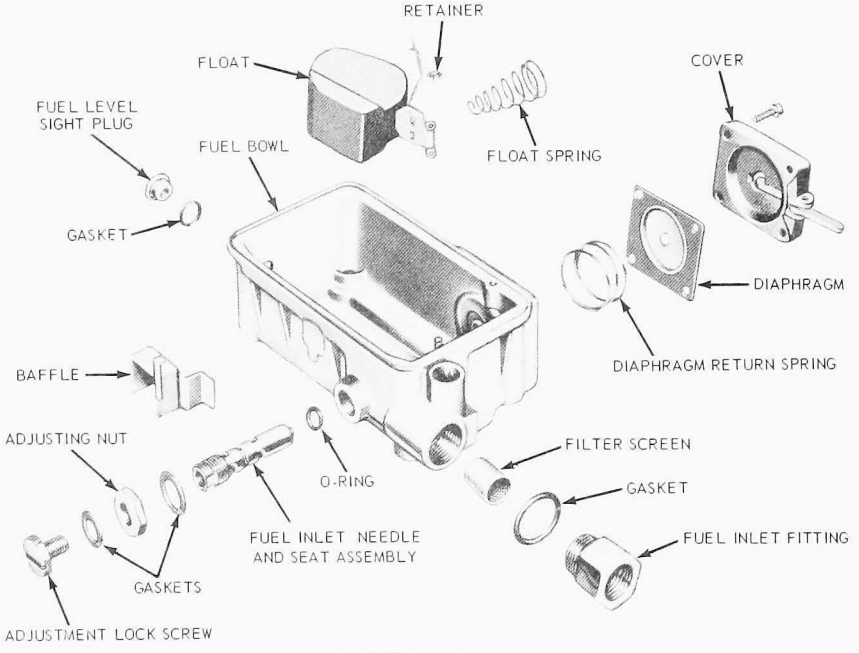

FIG. 21 Fuel Bowl Assembly

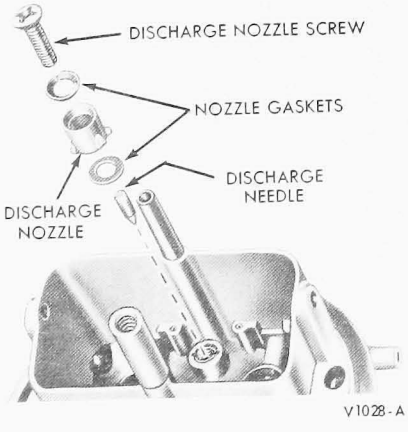

FIG. 20 Accelerating Pump Discharge Needle Installation

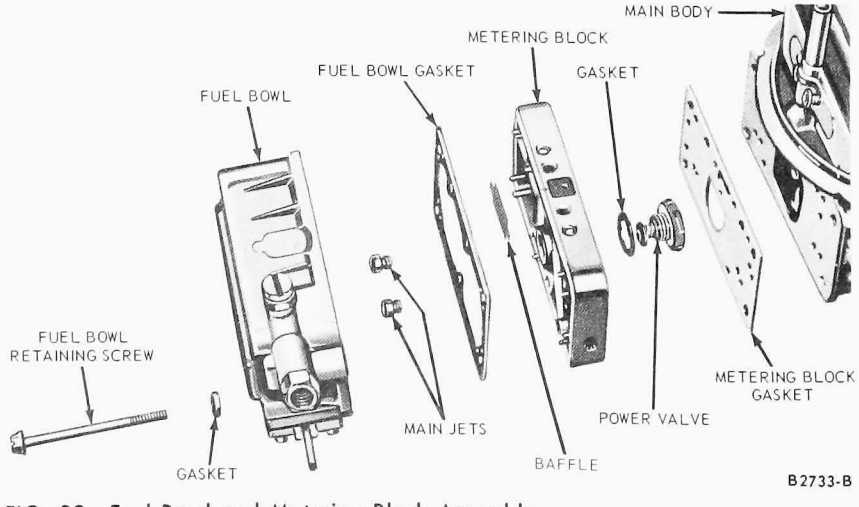

FIG. 22 Fuel Bowl and Metering Block Assembly

the throttle body in position on the main body sliding the choke rod into the choke rod lever as the throttle body is placed into position. Install the throttle body to main body screws and lockwashers.

9. Install the governor housing seal on the governor housing. Place the housing gasket on the main body.
10. Position the governor housing in place on the throttle body and main body. Place the governor lever over the throttle shaft and install the washer and nut. Install the governor housing attaching screws.
11. Install the governor spring. Install the housing gasket and cover. Install the cover safety wire and seal.

FUEL BOWL AND METERING BLOCK

Refer to Figs. 21 and 22 for the correct location of the fuel bowl parts.

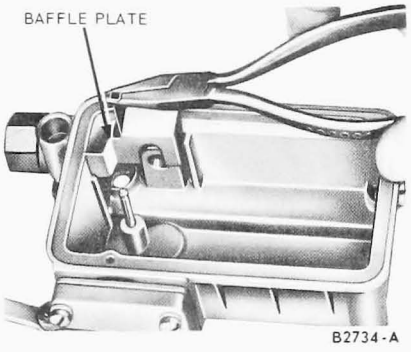

FIG. 23 Baffle Plate Installation

1. Place the accelerating pump diaphragm spring and diaphragm in the accelerating pump chamber. The diaphragm must be positioned so that the large end of the lever disc will be against the operating lever. Install the cover with the screws finger tight. Make sure the diaphragm is centered, then compress the diaphragm with the pump operating lever and tighten the cover screws.
2. Install the fuel level sight plug and gasket.
3. Install the fuel inlet filter screen, gasket, and fitting.
4. Slide the baffle plate on the ridges in the fuel bowl (Fig. 23).
5. Install the float spring on the float, slide the float on the shaft and install the float retainer.
6. Apply petroleum jelly to a new O-ring seal and slide it on the fuel inlet needle and seat assembly.
7. Position the fuel inlet needle and seat assembly in the fuel bowl through the top of the bowl. Position the adjusting nut gasket and nut on the fuel inlet needle and seat. Align the flat on the ID of the nut with the flat on the OD of the fuel inlet needle and seat assembly.
8. As a preliminary float adjustment, adjust the float so that the top of the float is parallel with the top of the fuel bowl with the fuel bowl inverted (Fig. 24).
9. Install the fuel level adjusting lock screw and gasket.
10. Using a socket wrench, install the power valve and a new gasket. **Be sure to install the correct power valve. Refer to the specifications for the correct identification number. The number is stamped on a flat on the base of the valve** Using a jet wrench, install the main jets.
11. Position the metering block gasket on the dowels on the back of the metering block. Lay the metering block in place on the main body. Position the baffle on the metering block, then position the fuel bowl gasket on the metering block. Place the attaching screws and new compression gaskets in the fuel bowl. Lay the bowl in place on the metering block. Tighten the screws.

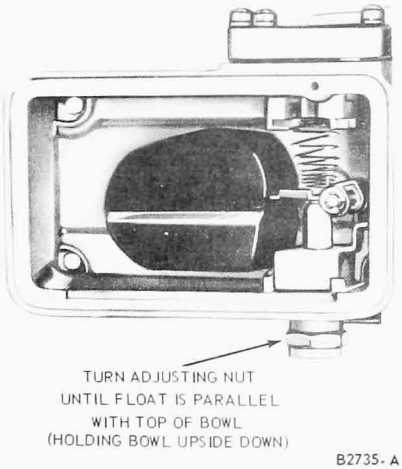

FIG. 24 Float Adjustment

PART 24-23 Model 4150 4-V Carburetor

Applies To 391, 401, 477 and 534 Engines Only

COMPONENT INDEX	Page	COMPONENT INDEX	Page
ACCELERATOR PUMP DIAPHRAGM		FUEL BOWL AND METERING BLOCK	
Removal and Installation	23-06	Disassembly and Assembly	23-06
ACCELERATING PUMP LEVER ADJUSTMENT	23-04	Removal and Installation	23-05
ACCELERATING PUMP STROKE	23-04	FUEL INLET NEEDLE AND SEAT	
CARBURETOR ADJUSTMENT		Removal and Installation	23-06
Description	23-01	GOVERNOR	
Removal and Installation	23-05	Disassembly and Assembly	23-07
FAST IDLE SPEED ADJUSTMENT		MAIN BODY	
Initial Setting	23-03	Disassembly and Assembly	23-07
Final Setting	23-03	MAIN JET	
FLOAT		Removal and Installation	23-05
Removal and Installation	23-06	POWER VALVE AND GASKET	
FLOAT LEVEL ADJUSTMENT		Removal and Installation	23-05
Dry	23-04	THROTTLE BODY	
Wet	23-04	Disassembly and Assembly	23-07
		THROTTLE SHAFT HOUSING	
		Disassembly and Assembly	23-07

DESCRIPTION

The 4-V carburetor used on the 391, 401, 477 and 534 CID engines (Figs. 1 and 2) is a downdraft, two-stage carburetor. It can be considered as two dual carburetors; one supplying a fuel-air mixture throughout the entire range of engine operation (primary stage), and the other functioning only when a greater quantity of fuel-air mixture is required (secondary stage).

The primary stage (front section) of the carburetor contains a fuel bowl, metering block (Fig. 3), and an accelerating pump assembly. The primary barrels each contain a primary and booster venturi, main fuel discharge nozzle, throttle plate, and idle fuel passage. The choke plate, mounted in the air horn above the primary stage venturis, is manually controlled.

On the carburetor for the 401, 477 and 534 engines, poppet or blow-by valves are located in the choke plate and at the front of the primary air horn.

The secondary stage, (rear section) of the carburetor contains a fuel bowl, metering block, and secondary throttle operating diaphragm assembly. The secondary barrels each contain a primary and booster venturi, idle fuel passages, main secondary fuel discharge nozzle, throttle plate, and a transfer system fuel passage.

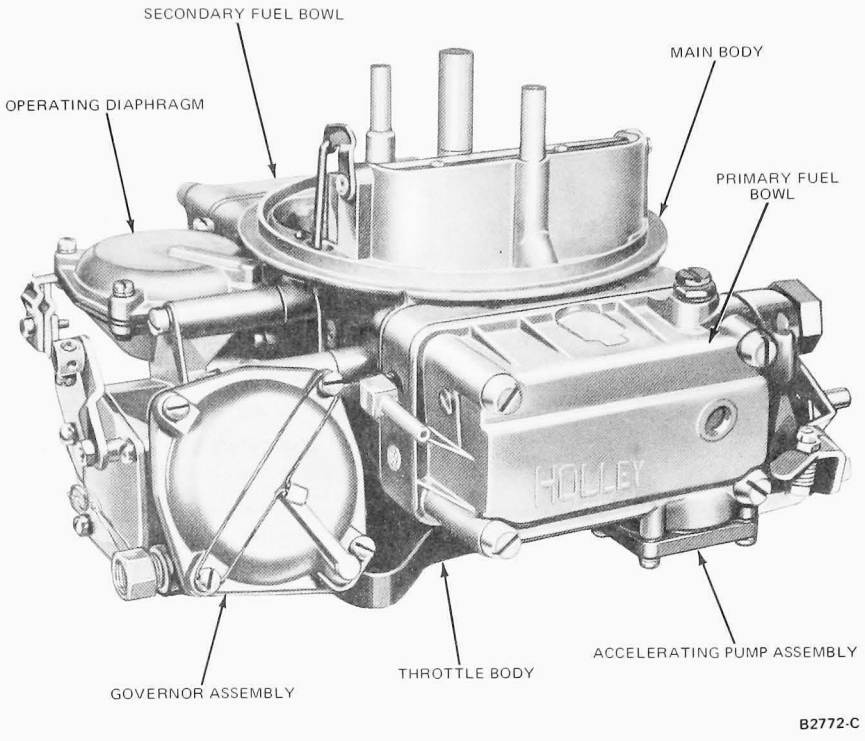

FIG. 1 Holley 4-V Carburetor for the 391 CID HD Engines—Right Front View

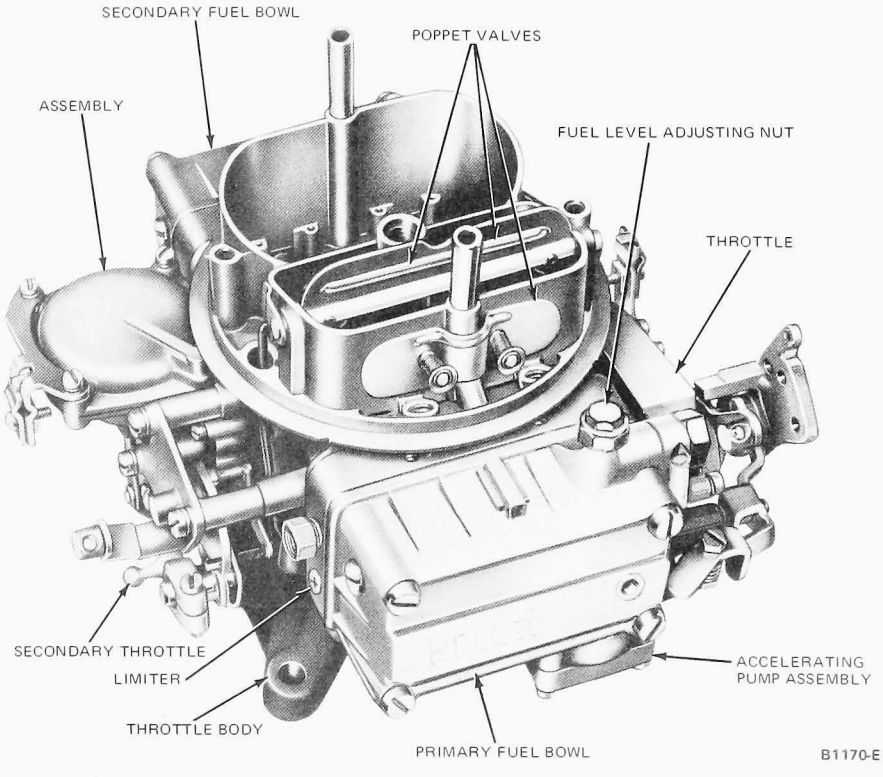

FIG. 2 Holley 4-V Carburetor for the 401, 477 and 534 SD Engines—Right Front View

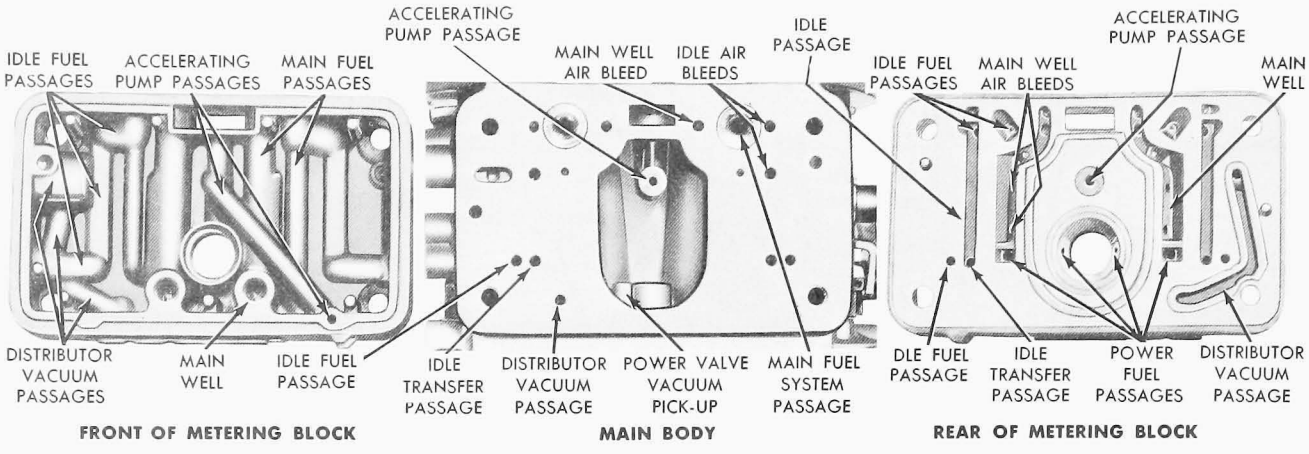

FIG. 3 Fuel Passages Identification—Holley 4-V

ADJUSTMENTS

FAST IDLE SPEED ADJUSTMENT—INITIAL SETTING

391 4-V ENGINE

1. With the primary throttle plates closed, measure the clearance between the fast idle cam and the head of the fast idle screw (Fig. 4).
2. If the clearance is not to specifications, remove the governor housing, following the removal procedure in Part 23-20.
3. Turn the fast idle screw the required amount to increase or decrease the clearance. A **3/16 inch wrench with a 90 degree head will be required to perform the adjustment.** A 1/4 turn in or out will alter the clearance by approximately 0.008 inch.
4. Install the housing on the carburetor governor and check the clearance, as outlined in Step 1. When the clearance is properly adjusted, install the governor housing, following the installation procedure in Part 23-20.

401, 477 AND 534 4-V ENGINES

With the choke in the wide open position, turn the fast idle adjusting screw (Fig. 5) in until it just touches the fast idle cam; then back it off 1/8 to 1/4 turn.

FAST IDLE SPEED—FINAL SETTING

A hand (cable) operated throttle control has been provided for the engines in various vehicle models and series. The throttle is actuated by a knob, located on the instrument panel. The hand operated throttle control is useful for maintaining constant engine speed when running power take-off equipment or when performing certain service operations.

The fast (cold engine) idle speed is adjusted with the hand throttle control knob pushed fully inward. The idle (hot engine) speed must be adjusted to specification before the fast idle speed can be adjusted.

391 (4-V) V-8 ENGINES

The fast idle speed adjustment screw for the 391 (4-V) V-8 engine is located in the governor housing (Fig. 4).

The fast idle adjustment screw contacts the fast idle cam during the engine warm-up period and controls the fast (cold engine) idle speed.

1. Adjust the idle (hot engine) speed and mixture to specifications before attempting to set the fast (cold engine) idle speed. **The fast idle speed adjustment is made with the engine at normal, stabilized operating temperature.**
2. With the engine operating and a tachometer attached to the engine, disconnect the choke cable housing from the choke cable bracket clamp. Pull the choke cable housing rearward until the choke plate operating lever is against the stop on the choke cable bracket. **Hold the choke plate open to the choke**

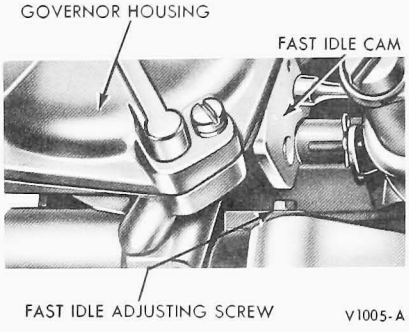

FIG. 4 Fast Idle Speed Adjustment—391 Engine

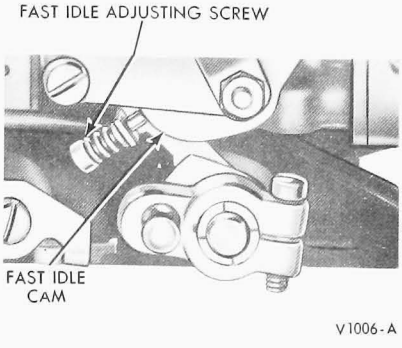

FIG. 5 Fast (Cold) Idle Speed Adjustment— 401, 477 and 534 CID Engines

pulldown limit, to keep the engine running.

3. Check the fast (cold engine) rpm. If the idle rpm is not to specification, turn the fast idle screw clockwise with a 3/16 inch wrench to decrease the engine rpm or counterclockwise to increase the rpm. **A 3/16 inch wrench with a 90 degree head will be required to perform the adjustment.**
4. Turn off the engine and remove the tachometer.
5. Push the choke lever, cable and housing forward to the full choke position and clamp the choke cable housing to the choke cable bracket.
6. Install the air cleaner assembly if other adjustments are not required.

401, 477 AND 534 (4-V) V-8 ENGINES

The fast idle adjustment screw on the left side of the carburetor contacts the fast idle cam during the engine warm-up period and controls the fast (cold engine) idle speed (Fig. 5).

1. Adjust the idle (hot engine) speed and mixture before attempting to set the fast (cold engine) idle speed. **The fast idle speed adjustment is made with the engine at a normal, stabilized operating temperature.**
2. With the choke in the wide open position, turn the fast idle adjusting screw (Fig. 5) in until it just touches the fast idle cam; then back it off 1/8 to 1/4 turn.

ACCELERATING PUMP LEVER ADJUSTMENT

1. Using a feeler gauge and with the throttle plates (primary throttle plates) in the wide open position, there should be the specified clearance between the accelerating pump operating lever adjustment screw head and the pump arm when the pump arm is depressed manually (Fig. 6).
2. If adjustment is required, loosen the adjusting screw lock nut and turn the adjusting screw in to increase the clearance and out to decrease the clearance. **One half turn of the adjusting screw is equal to approximately 0.015 inch.** When the proper adjustment has been obtained hold the adjustment screw in position with a wrench and tighten the lock nut.
3. Perform an accelerating pump stroke adjustment, if required.

ACCELERATING PUMP STROKE ADJUSTMENT

The accelerating pump stroke has been set to help keep the exhaust emission level of the engine within the specified limits. The additional holes provided for pump stroke adjustment are for adjusting the stroke for specific engine applications. **The stroke should not be changed from the specified setting.**

If the pump stroke has been changed from the specified setting refer to the following instructions to correct the stroke to specifications.

If a change in the adjustment is required, make certain the proper hole (top or bottom) in plastic accelerating pump cam, located behind the throttle lever, is properly aligned (indexed) with the numbered hole (top or bottom) in the throttle lever before installing the retaining screw.

FUEL LEVEL FLOAT ADJUSTMENT—DRY

The dry float adjustment is a preliminary fuel level adjustment only. The final adjustment (Fuel Level Float Adjustment—Wet) must be performed after the carburetor is installed on the engine.

With the fuel bowls and floats assemblies removed, adjust the floats so that the floats are parallel to the fuel bowls, with the top of the fuel bowls inverted (Fig. 7).

FUEL LEVEL ADJUSTMENT—WET

The fuel pump pressure and volume must be to specifications prior to performing the following adjustments.

1. Operate the engine to normalize engine temperatures and place the vehicle on a flat surface, as near level as possible. Stop the engine and remove the air cleaner, if it was not previously removed.
2. Check the fuel level in each fuel bowl separately (Fig. 8). **Place a suitable container below the fuel level sight plug in the fuel bowl to collect any spillover of fuel. Carefully remove the fuel level sight plug and gasket. Check each fuel bowl separately. The fuel level within the bowl should be at the lower edge of the sight plug opening (plus or minus 1/16 inch).**
3. If the fuel level is satisfactory, install the sight plug.
4. If the fuel level is too high, drain the fuel bowl and refill it. To drain the fuel bowl, loosen one lower retaining bolt from the fuel bowl and drain the fuel into a suitable container. Check the fuel level again before altering the float setting. **This will eliminate the possibility of foreign material**

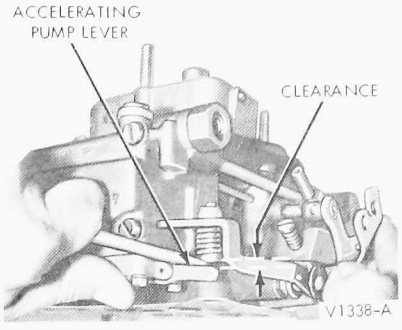

FIG. 6 Accelerating Pump Lever Clearance—Holley Carburetors

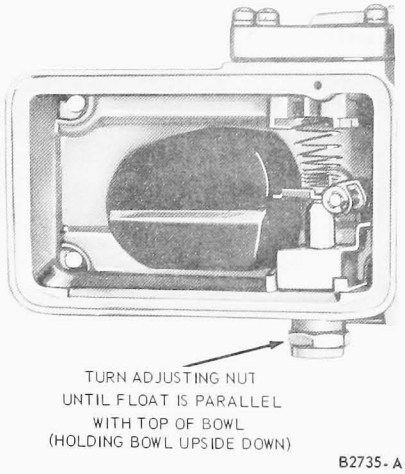

FIG. 7 Adjusting Float—Dry

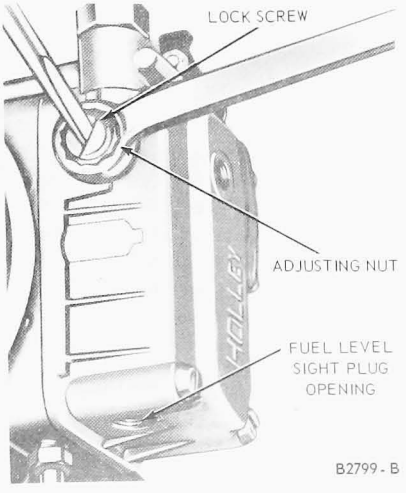

FIG. 8 Adjusting Fuel Level

causing a temporary flooding condition. Install the bolt and the fuel level sight plug, and start the engine to fill the fuel bowl. After the fuel level has stabilized, stop the engine and check the fuel level.

If the fuel level is still too high, it should first be lowered below specifications and then raised until it is just at the lower edge of the sight plug opening. If the fuel level is too low, it is only necessary to raise it to the specified level. Follow the procedure under To Lower Fuel Level or To Raise Fuel Level, whichever is applicable.

TO LOWER FUEL LEVEL

1. With the engine stopped, loosen the lock screw on top of the fuel bowl just enough to allow rotation of the adjusting nut underneath (Fig. 8). **Do not loosen the lock screw or attempt to adjust the fuel level with the sight plug removed and the engine running because the pressure in the line will spray fuel out and present a fire hazard.**
2. Turn the adjusting nut approximately 1/2 turn in to lower the fuel level below specifications (1/6 turn of the adjusting nut, depending on the direction of rotation, will raise or lower the float assembly at the fuel level sight plug opening 3/64 inch).
3. Tighten the lock screw and install the fuel level sight plug. Start the engine. After the fuel level has stabilized, stop the engine and check the fuel level at the sight plug opening. The fuel level should be below specified limits. If it is not, repeat the previous steps, turning the adjusting nut an additional amount sufficient to lower the fuel below the specified level.
4. Loosen the lock screw and turn the adjusting nut out in increments of 1/6 turn or less until the correct fuel level is achieved. After each adjustment, tighten the lock screw, install the fuel level sight plug, and then start the engine and stabilize the fuel level. Check the fuel level at the sight plug opening. Install the sight plug and gasket.
5. Install the air cleaner if other carburetor adjustments are not required.

TO RAISE FUEL LEVEL

Perform steps 1, 4 and 5 under the procedure, To Lower Fuel Level.

REMOVAL AND INSTALLATION

CARBURETOR

Removal

1. Remove the air cleaner. Remove the throttle rod from the throttle lever. Disconnect the choke control cable, hand throttle control cable, the distributor vacuum hose and the fuel line.
2. Disconnect the governor throttle control lines or rod at the carburetor.
3. Remove the carburetor retaining nuts and lockwashers, then remove the carburetor. Remove the spacer from the manifold.

Installation

1. Be sure all old gasket material is removed from the manifold heat riser flange, then place the spacer in position on the manifold. Position the carburetor on the manifold and install the lockwashers and nuts. Tighten the nuts alternately to specification.
2. Connect the throttle rod. Connect the choke control cable. **Be sure the end of the choke cable is bent downward to prevent interference with the bottom of the air cleaner. This interference will restrict opening of the choke plate.** Connect the hand throttle control cable, the distributor vacuum hose, the fuel line, and the governor lines or control rod. Adjust the idle speed, the primary and secondary fuel level, and the idle fuel mixture. Adjust the governor control rod.

FUEL BOWL AND GASKET AND METERING BLOCK AND GASKET

Removal

1. Remove the fuel inlet line and vacuum line.
2. Place a suitable container under the fuel bowl and drain the bowl by loosening one of the lower fuel bowl retaining screws. Remove the container.
3. Remove the four fuel bowl retaining screws.
4. Remove the fuel bowl, gasket and baffle, and metering block and gasket. Discard the gaskets.

Installation

1. If the fuel bowl or metering block is being replaced, transfer the parts.
2. Position the metering block gasket on the dowels on the back of the metering block.
3. Lay the metering block in place on the main body.
4. Position the baffle and fuel bowl gasket on the metering block.
5. Place the fuel bowl on the metering block. Use new compression gaskets on the bowl retaining screws; then install and tighten the screws.

POWER VALVE AND GASKET

Removal

1. Remove the fuel bowl and metering block.
2. Using a socket wrench, remove the power valve and gasket.
3. Discard the gasket.

Installation

1. Place a new gasket on the specified power valve.
2. Using a socket wrench, install the power valve and gasket.
3. Install the fuel bowl and metering block.

MAIN JET

1. Remove the fuel bowl and metering block.
2. Use a jet wrench to remove and install the jets.
3. Install the fuel bowl and metering block.

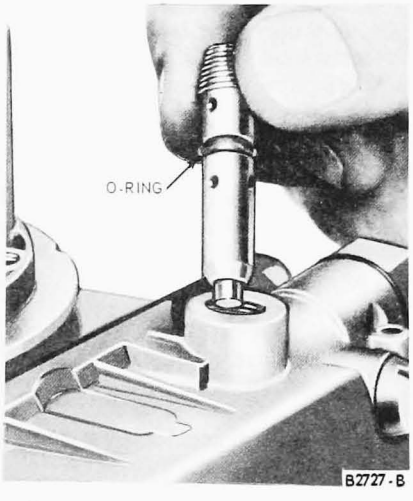

FIG. 9 Removing Fuel Inlet Needle and Seat

ACCELERATING PUMP DIAPHRAGM

Removal

1. Remove the fuel bowl and metering block.
2. Remove the accelerating pump cover, diaphragm and spring.

Installation

1. Place the spring and diaphragm in the accelerating pump chamber. The diaphragm must be positioned so that the diaphragm disc protrudes from the fuel bowl.
2. Install the cover screws finger tight.
3. Make sure the diaphragm is centered, compress the diaphragm with the pump operating lever and tighten the cover screws.

FLOAT

1. Using needle nose pliers, remove the float retainer.
2. Slide the float off the shaft.
3. Remove the spring from the float.

Installation

1. Install the float spring on the float.
2. Slide the float on the shaft.
3. Install the float retainer.

FUEL INLET NEEDLE AND SEAT

Removal

The fuel inlet needle and seat assembly can be replaced without removing the fuel bowl.

1. Remove the air cleaner.
2. Remove the fuel level adjustment lock screw and gasket. Turn the adjusting nut out and remove the adjusting nut and gasket. Remove the fuel inlet needle and seat assembly (Fig. 9). **Do not disassemble the fuel inlet needle and seat assembly. They are matched parts and are serviced as an assembly.**

Installation

1. Position the fuel inlet needle and seat assembly in the fuel bowl.
2. Position the adjusting nut gasket and nut on the fuel inlet needle and seat assembly. Align the flat on the ID of the nut with the flat on the OD of the fuel inlet needle and seat assembly.
3. Install the fuel level adjustment lock screw and gasket.
4. Adjust the fuel level.

DISASSEMBLY AND ASSEMBLY

DISASSEMBLY

To facilitate working on the carburetor and to prevent damage to the throttle plates, install bolts about 2 1/4 inches long of the correct diameter through the carburetor retaining bolt holes with a nut above and below the flange (or install carburetor legs).

Use a separate container for the component parts of the various assemblies to facilitate cleaning, inspection, and assembly.

The following is a step-by-step sequence of operations for completely overhauling the carburetor; however, certain components of the carburetor may be serviced without disassembling the entire unit. For a complete carburetor overhaul, follow all the steps. To partially overhaul the carburetor or to install a new gasket kit, follow only the applicable steps.

FUEL BOWLS AND METERING BLOCKS

Refer to Fig. 10 for the correct location of the fuel bowl parts.

1. Remove the primary fuel bowl and gasket, and the metering block and gasket. Discard the gaskets.
2. Remove the fuel transfer line and discard the O-ring seals.
3. Remove the balance tube, washer, and O-ring seal. Discard the O-ring seal.
4. Using a socket wrench, remove the power valve and gasket (Fig. 11).
5. Using a jet wrench, remove the main jets (Fig. 12).

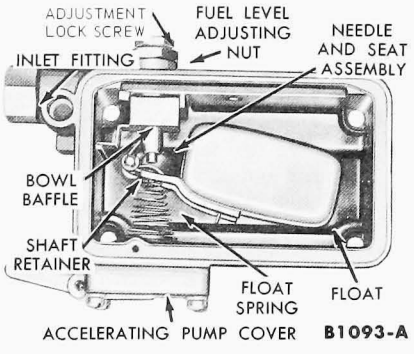

FIG. 10 Fuel Bowl—401, 477 and 534 CID Engines

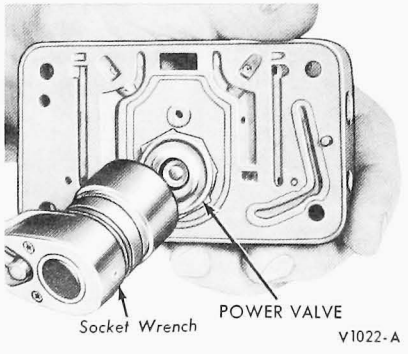

FIG. 11 Removing or Installing Power Valve

6. Remove the fuel level adjustment lock screw and gasket. Turn the adjusting nut counterclockwise and remove the locknut and gasket, and the fuel inlet needle and seat assembly. **Do not disassemble the fuel inlet needle and seat. They are matched and are replaced as an assembly.**
7. Using needle nose pliers (Fig. 13), remove the float retainer. Slide the float off the shaft. Remove the

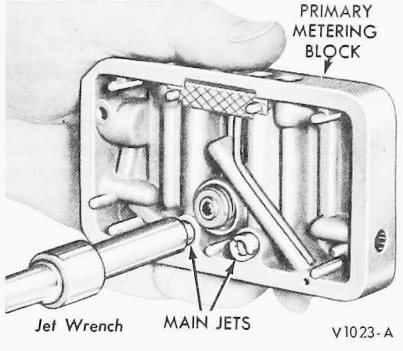

FIG. 12 Removing or Installing Main Jet

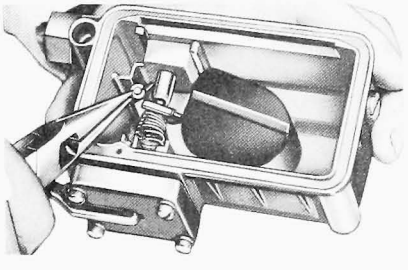

FIG. 13 Removing Float Shaft Retainer

spring from the float.
8. Remove the baffle plate from the fuel bowl.
9. Remove the fuel level sight plug and gasket.
10. Remove the fuel inlet fitting, gasket, and filter screen.
11. Invert the fuel bowl and remove the accelerating pump cover, diaphragm and spring. **The accelerating pump inlet ball check is not removable.**
12. Remove the secondary fuel bowl and gasket and the metering block and gasket. Discard the gaskets. Remove the balance tube washer and O-ring seal. Discard the O-ring seal.
13. Remove the following parts from the secondary metering block:

Do not remove the idle mixture adjusting limiters or adjusting screws.

14. Disassemble the secondary fuel bowl by following steps 6, 7, 8 and 9.

MAIN BODY

1. Remove the air cleaner anchor screw.
2. **On the 391 CID engine, remove the choke control lever, governor seal wire and the governor housing cover. Remove the nut and washer retaining the governor lever to the throttle shaft, then remove the governor housing. Remove the secondary diaphragm link retainer.**

On 401, 477 and 534 CID engines, remove the secondary diaphragm link retainer. Remove the fast idle cam housing, attaching screws and lockwashers, then remove the fast idle cam housing.

Remove the nut securing the choke swivel to the fast idle cam housing, then remove the choke swivel and fast idle cam assembly. Remove the plunger and spring from the fast idle cam.

3. Invert the carburetor and remove the throttle body to main body screws and lockwashers. Lift off the main body and remove the main body gasket. Discard the gasket.
4. Remove the retainer securing the choke rod to the choke rod lever and bushing assembly, then remove the lever retainer and remove the lever and lever spring.
5. Remove the choke rod retainer from the choke plate shaft lever. Remove the choke rod, washers, and seal from the main body.
6. Remove the choke plate assembly.
7. Slide the choke plate shaft out of the main body.
8. **On 401, 477 and 534 CID engines,** remove the retainers, spring seats, and springs from the poppet valve on the front of the main body. Use throttle body. Referring to the lines **caution to avoid losing the spring as they are under compression.** Remove the pins and poppet valve.
9. Remove the secondary diaphragm housing and gasket from the main body. The housing must be removed before the cover can be removed. Remove the diaphragm housing cover, then remove the spring and diaphragm, and the secondary vacuum ball check. Remove the distributor vacuum fitting.
10. Remove the accelerating pump discharge nozzle screw, then lift the pump discharge nozzle and gasket out of the main body. Invert the main body and let the discharge needle fall into the hand.

GOVERNOR HOUSING—391 CID ENGINE

1. Mark the governor spring pin hole to facilitate assembly. Remove the spring and pin.
2. Remove the diaphragm rod retainer and governor lever.
3. Remove the governor line fitting. **Make a note of the governor by-pass jet numbers and positions. Remove the by-pass jets, the diaphragm cover, and the diaphragm.**
4. Remove the fast idle cam shaft retainer and slide the fast idle cam and shaft out of the housing.
5. Remove the cam plunger, spring, and fast idle pin.

THROTTLE BODY—391 CID ENGINE

1. Remove the accelerating pump lever and the throttle operating shaft housing.
2. If the primary throttle shaft is to be removed, drive out the primary throttle shaft pin (Fig. 14). Remove the secondary throttle plates operating lever.
3. If it is necessary to remove the throttle plates, lightly scribe the primary and secondary throttle plates along the throttle shafts and mark each plate and its corresponding bore with a number or letter for proper installation (Fig. 15). Remove the throttle plates.
4. Remove the throttle connecting rod and the spacer (from the primary throttle lever). Remove the throttle operating housing plate.
5. If the throttle shafts are to be replaced, remove the throttle plates by following step 3 and slide the primary and secondary throttle shafts and bushings out of the throttle body.

THROTTLE BODY—401, 477 AND 534 CID ENGINES

1. Remove the accelerating pump lever and the throttle operating shaft housing.
2. Drive out the governor lever retaining pin, then loosen the governor lever screw and remove the lever. Remove the fast idle cam lever and the secondary diaphragm lever.
3. If it is necessary to remove the throttle plates, lightly scribe the primary and secondary throttle plates along the throttle shafts and mark each plate and its corresponding bore with a number or letter for proper installation (Fig. 15). Remove the throttle plates.
4. Remove the throttle connecting rod retainers, washer (from the secondary throttle lever) and the connecting rod. Slide the primary and secondary throttle shafts and bushings out of the throttle body. Remove the throttle operating housing plate.

THROTTLE OPERATING HOUSING—391 CID ENGINE

1. Remove the idle (hot engine) speed adjustment screw and spring.
2. Remove the throttle shaft driver retaining screw from inside the housing, then remove the driver.

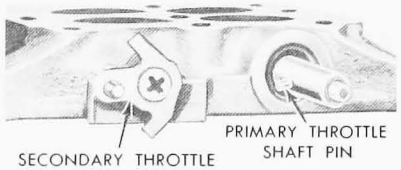

FIG. 14 Primary Throttle Shaft Pin

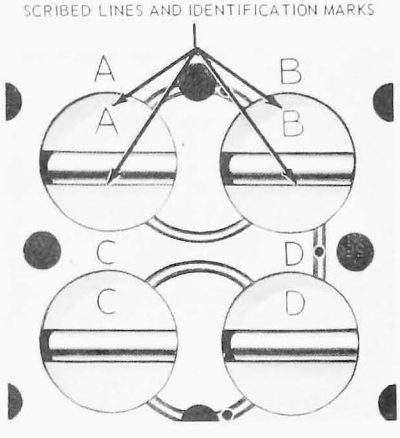

FIG. 15 Removing Throttle Plate

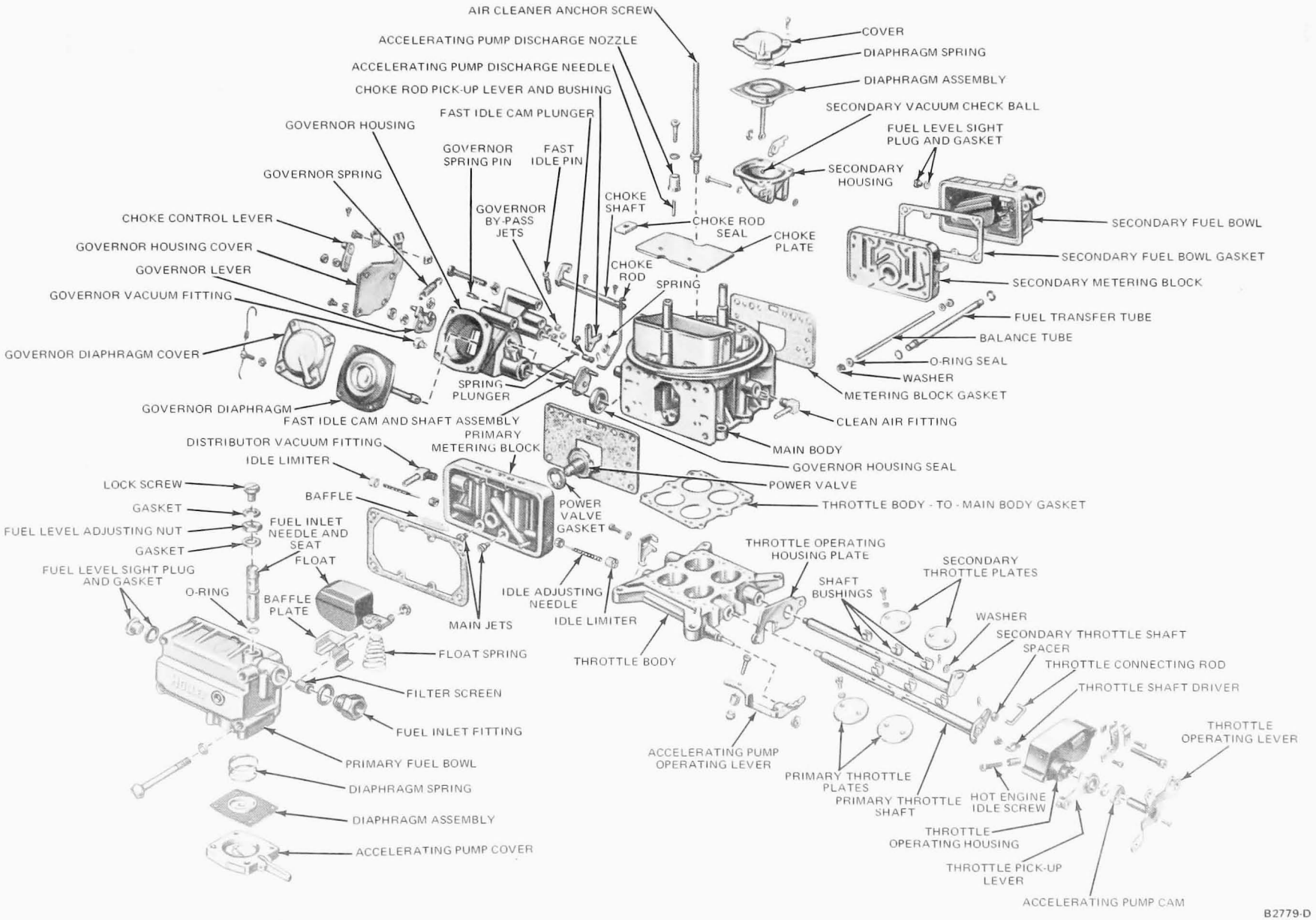

FIG. 16 Carburetor Assembly—Holley 4-V for 391 CID Engine

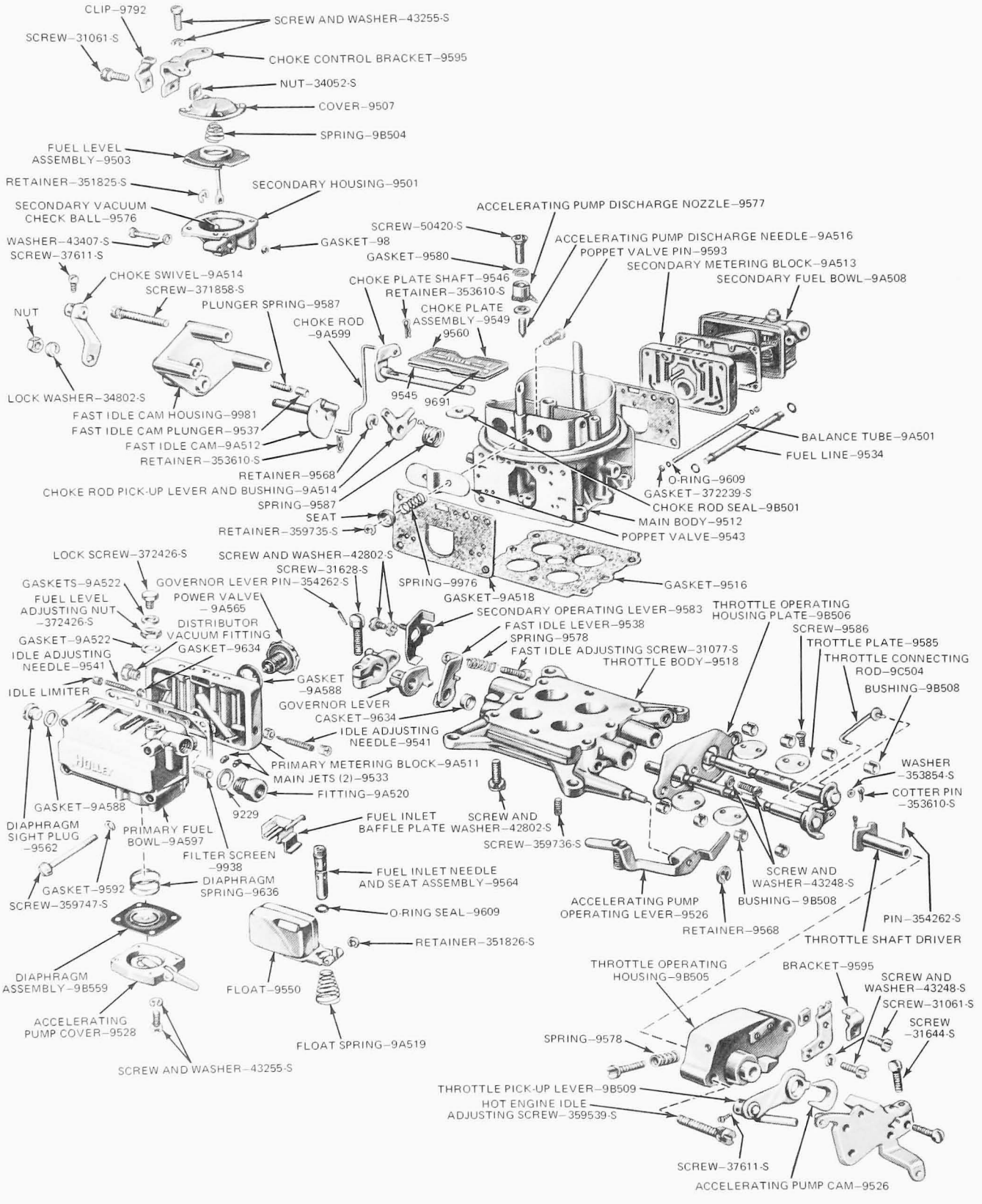

FIG. 17 Carburetor Assembly—Holley 4-V for 401, 477 and 534 CID Engines

3. Slide the throttle operating lever and shaft assembly out of the housing.
4. Remove the accelerating pump cam from the throttle operating lever.
5. Remove the throttle cable bracket.

THROTTLE OPERATING HOUSING—401, 477 AND 534 CID ENGINES

1. Remove the hot engine idle screw and spring, and the pick-up lever bracket.
2. Remove the retaining pin from the throttle operating lever, then loosen the lever screw and remove the lever.

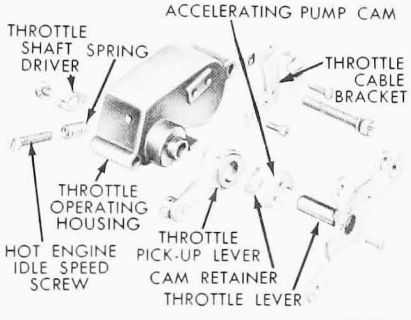

FIG. 18 Throttle Operating Housing

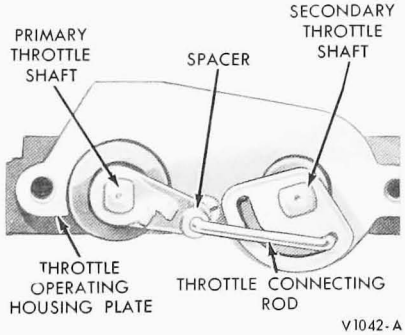

FIG. 19 Installing Throttle Connecting Rod— 391 CID Engine

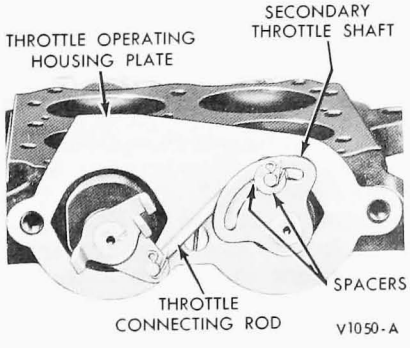

FIG. 20 Installing Throttle Connecting Rod—401, 477 and 534 CID Engines

3. Slide the throttle shaft driver and shaft out of the housing. Remove the pick-up lever and swivel assembly.
4. Remove the accelerating pump cam from the throttle operating lever.

Carburetor cleaning and inspection are covered in Part 24-01.

ASSEMBLY

Make sure all holes in the new gaskets have been properly punched and that no foreign material has adhered to the gaskets. Make sure the accelerating pump diaphragm and the secondary operating diaphragm are not cut or torn.

Disassembled views of the carburetors are shown in Figs. 16 and 17.

THROTTLE OPERATING HOUSING—391 CID ENGINE

Refer to Fig. 18 for the correct location of the parts.

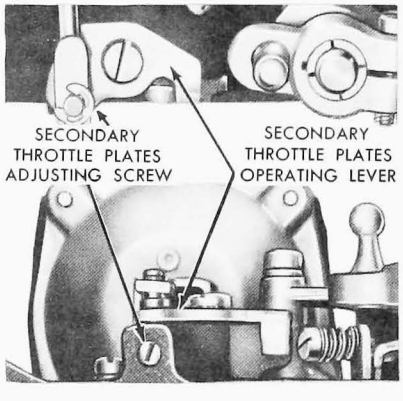

FIG. 21 Secondary Throttle Plate Adjustment

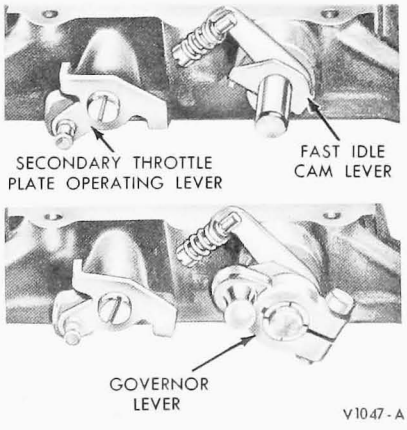

FIG. 22 Fast Idle Cam Lever and Governor

1. Install the idle (hot engine) speed adjustment screw and spring. Turn the screw in until spring tension is felt.
2. Install the throttle cable bracket.
3. Install the accelerating pump cam on the throttle operating lever.
4. Position the throttle pick-up lever and swivel assembly on the throttle operating housing bushing with the throttle cable clamp on the inside.
5. Slide the throttle operating lever into the housing, then install the driver in the end of the throttle operating lever shaft so that the throttle operating lever can be rotated from the full open position to the full closed position. If the throttle lever cannot be rotated from the open to the close position, remove the drive and reposition it.

THROTTLE OPERATING HOUSING—401, 477 AND 534 ENGINES

1. Install the hot engine idle screw and spring. Turn the screw in until spring tension is felt. Install the pick-up lever bracket.
2. Install the accelerating pump cam on the throttle operating lever.
3. Slide the throttle shaft driver and shaft into the throttle operating housing.
4. Position the throttle pick-up lever and swivel assembly on the throttle operating housing bushing with the tang on the lever facing out.
5. Slide the throttle operating lever on the shaft with the retaining pin hole in the lever and shaft aligned. Tighten the lever tension screw. Be sure the throttle lever can be rotated from the full open to the full closed position, then install the retaining pin. If the throttle lever can not be rotated from the open to the closed position, it will be necessary to remove the throttle shaft driver and reposition it.

THROTTLE BODY

1. If the throttle plates were removed, position the bushings on the throttle shafts and slide them into the scribed on the throttle plates, install the plates in their proper location with the screws snug, but not tight. Close the throttle plates and hold the throttle body up to the light. Little or no light should show between the throttle plates and the throttle bores. If the throttle plates are properly installed and there is no binding when the throttle shafts are rotated, tighten and stake the screws.

2. Install the throttle operating housing plate and the throttle connecting rod. Be sure the throttle connecting rod is installed as shown in Figs. 19 and 20. Install the accelerating pump lever, and the secondary throttle plate operating lever.
3. Hold the secondary throttle plates closed. Turn the secondary throttle plate stop screw (Fig. 21) until it just touches the tab on the secondary operating lever, then turn it in 1/4 turn.
4. **On 391 CID engines,** invert the throttle body and open the primary throttle plates, then install the primary throttle shaft pin so that it protrudes approximately 3/16 inch from the shaft.

On 401, 477 and 534 CID engines, position the fast idle cam lever on the primary throttle shaft. Position the governor lever on the primary throttle shaft with the retaining pin holes in the lever and shaft aligned. Tighten the lever tension screw, then install the retaining pin (Fig. 22).

5. Open the primary throttle plates and install the throttle operating housing on the throttle body. **A correctly installed throttle lever and retainer lever will close the throttle plates, but will not open them.**

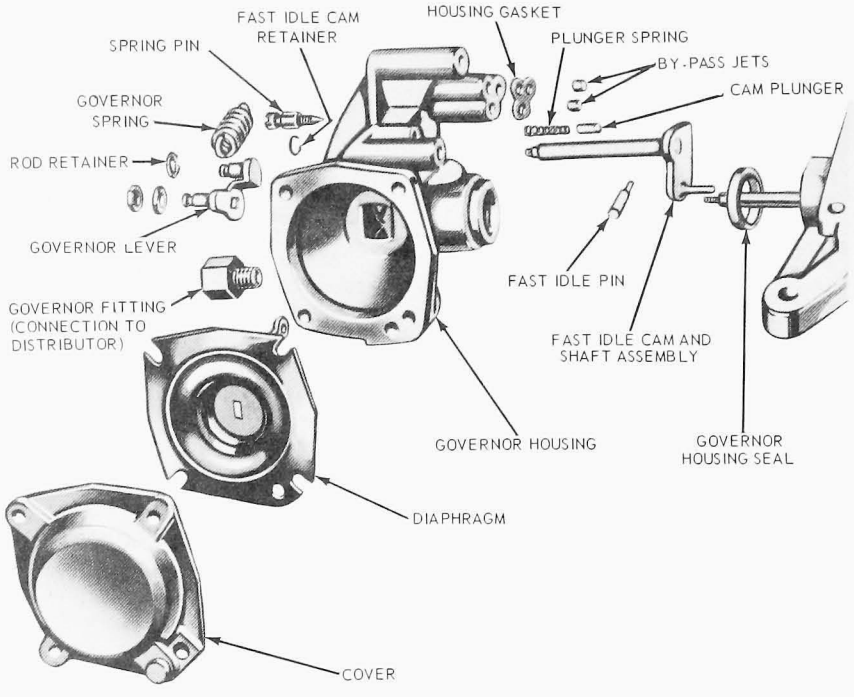

FIG. 23 Governor Housing

GOVERNOR HOUSING—391 CID ENGINE

Refer to Fig. 23 for the correct location of the parts.

1. Place the fast idle pin in position in the governor housing.
2. Insert the fast idle cam plunger spring in the plunger and install the assembly in the governor housing.
3. Slide the fast idle cam assembly into position and install the retainer.
4. Install the governor by-pass jets and the governor line fitting.
5. Install the governor spring pin in the same marked hole from which it was removed.
6. Position the governor diaphragm in the governor housing. Position the diaphragm properly to avoid damage by the screws. Install the cover with the screws finger tight. Pull the diaphragm rod as far as it will go and tighten the cover screws. Install new safety wire and a seal.
7. Place the governor lever in the housing and insert the diaphragm rod on the smallest stud of the lever. Install the rod retainer.
8. Install the governor spring on the spring pin and governor lever stud. The governor housing is installed after the throttle body is assembled in the main body.

MAIN BODY

1. Drop the accelerating pump discharge needle into its well (Fig. 24).
2. Seat the needle with a brass drift and a light hammer. Make sure the needle is free.
3. Position the accelerating pump discharge nozzle gasket and nozzle in the main body, then install the attaching screw.
4. Drop the secondary vacuum ball check in the vacuum passage in the secondary diaphragm housing (Fig. 25).
5. Position the secondary diaphragm in the housing and place the spring on the diaphragm disc. Position the diaphragm properly to avoid damage by the screws. Install the cover with the screws finger-tight. Compress the diaphragm spring by pushing the diaphragm rod inward as far as it will go and tighten the cover screws. **The diaphragm housing must be removed from the main body to install the cover.**
6. Place the gasket on the secondary vacuum passage opening on the main body. Lay the diaphragm housing in position on the main body and install the lockwashers and attaching screws.

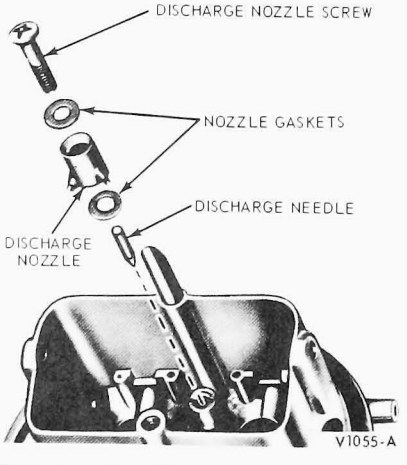

FIG. 24 Installing Accelerating Pump Discharge Needle

7. **On 401, 477 and 534 CID engines,** place the air horn poppet valve in position on the main body. From inside the primary air horn, insert the attaching screws through the main body and poppet valve. Install the springs, spring seats and retainers on the attaching screws.
8. Position the choke plate shaft in the air horn.

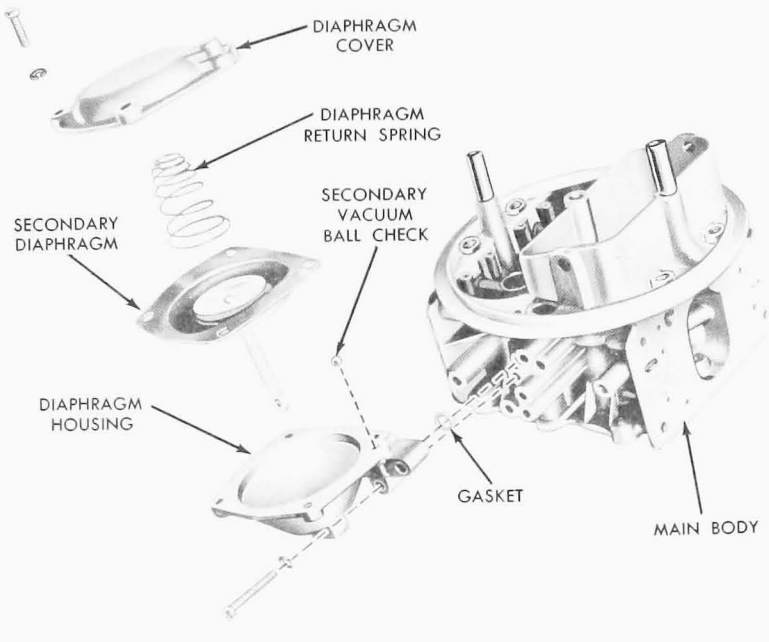

FIG. 25 Secondary Diaphragm Assembly

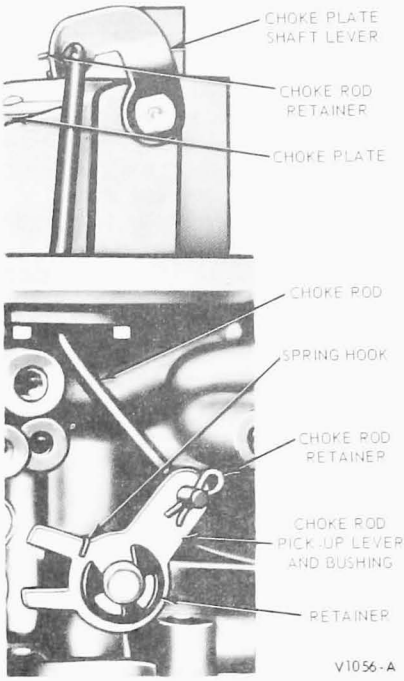

FIG. 27 Installing Choke Rod—401, 477 and 534 Engine

9. Position the choke plate assembly on the choke plate shaft, then install the attaching screws and the self-locking jam nuts (Fig. 26).
10. Install the rod seal in the retaining groove located on the underside of the carburetor air cleaner flange.
11. Slide the choke rod through the opening in the main body and secure it to the choke plate shaft lever with a pin retainer.
12. Place the choke rod lever spring on the lever with the end of the spring with the largest hook on the lever (Fig. 27).
13. Place the choke rod lever and spring assembly in position on the main body with the other end of the spring fitting in the groove in the main body.
14. Secure the choke rod to the lever with a pin retainer. Install the choke lever retainer.
15. Insert the fast idle cam plunger spring in the plunger and install the assembly in the plunger bore in the fast idle cam housing.
16. Install the fast idle cam in the fast idle cam housing and install the

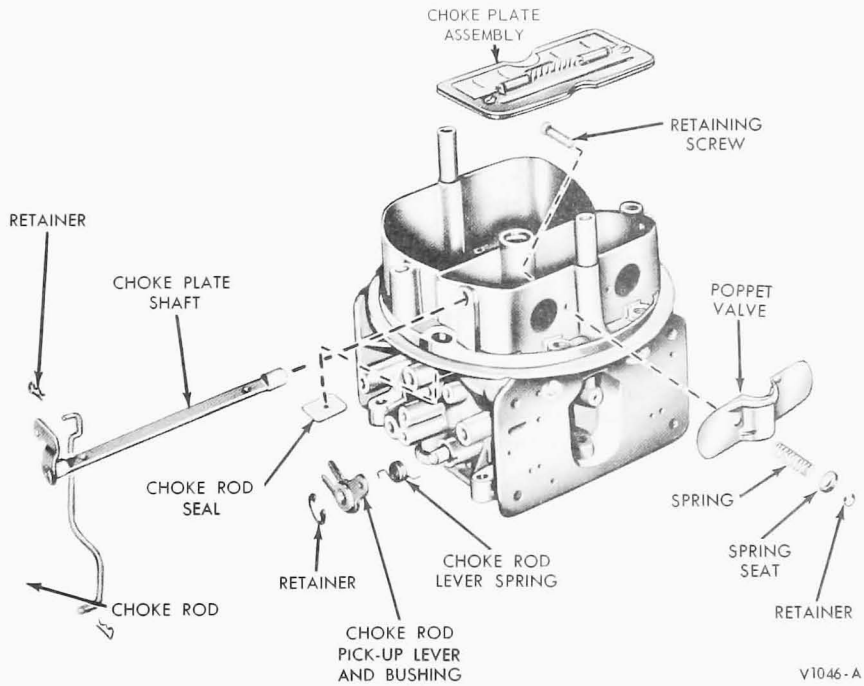

FIG. 26 Choke Plate and Poppet Valve Assembly—401, 477 and 534 CID Engines

choke swivel, lockwashers, and attaching nut on the end of the fast idle cam shaft.

17. Position the fast idle cam housing on the main body so that the pin on the fast idle cam is between the two tangs on the choke rod lever. Install the housing attaching screws.
18. Invert the main body and position the throttle body gasket on the main body. Slide the secondary diaphragm rod onto the operating lever as the throttle body is placed into position. Install the diaphragm operating rod retainer.
19. Install the throttle body to main body screws and lockwashers.
20. Install the air cleaner anchor stud.

FUEL BOWLS AND METERING BLOCKS

Refer to Fig. 28 for the correct location of the fuel bowl parts. The primary and secondary fuel bowls and metering blocks are installed on the main body in the same sequence (Fig. 29).

1. Place the accelerating pump diaphragm spring and diaphragm in the accelerating pump chamber of the primary fuel bowl. The diaphragm must be positioned so that the large end of the lever disc will be against the operating lever. Install the cover with the screws finger-tight. Make sure the diaphragm is centered, then compress the diaphragm with the pump operating lever and tighten the cover screws.
2. Install the fuel lever sight plug and gasket.
3. Slide the baffle plate on the ridges in the fuel bowl.
4. Install the float spring on the float and slide the float on the shaft. Be sure the float spring is between the ridges on the boss of the floor of the fuel bowl. Using needle nose pliers, install the float retainer.
5. Apply Vaseline to a new O-ring seal and slide it on the fuel inlet needle and seat assembly.
6. Position the fuel inlet needle and seat assembly in the fuel bowl through the top of the bowl. Position the adjusting nut gasket and nut on the fuel inlet needle and seat assembly. Align the flat on the ID of the nut with the flat on the OD of the fuel inlet needle and seat assembly. Install the fuel level adjustment lock screw and gasket.
7. Perform a dry float adjustment (under Adjustments of this Part).
8. Using a socket wrench, install the power valve and a new gasket in the metering block. **Be sure to install the correct power valve. Refer to specifications for the correct identification number. The number is stamped on a flat on the base of the valve.** Using a jet wrench, install the main jets in the metering block.
9. Apply Vaseline to a new O-ring seal and slide it on one end of the balance tube, then slide the washer on the same end of the balance tube. Slide the balance tube through the hole on the primary side of the main body and through the hole in the secondary side of the main body (Fig. 30). Position the balance tube so that the tube protrudes equally at each end. Push the O-ring seal and washer into the recess in the main body (Fig. 30).
10. Position the primary metering block

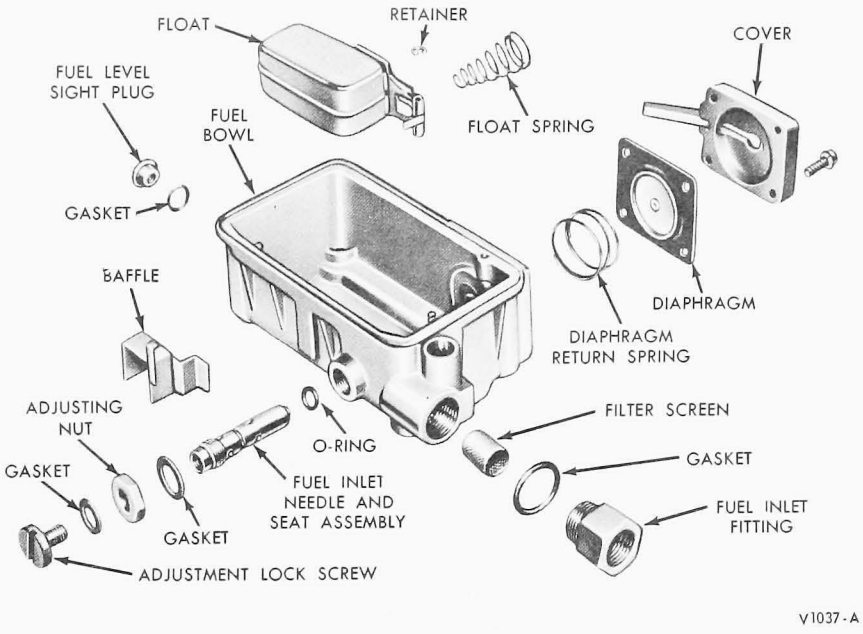

FIG. 28 Primary Fuel Bowl Assembly

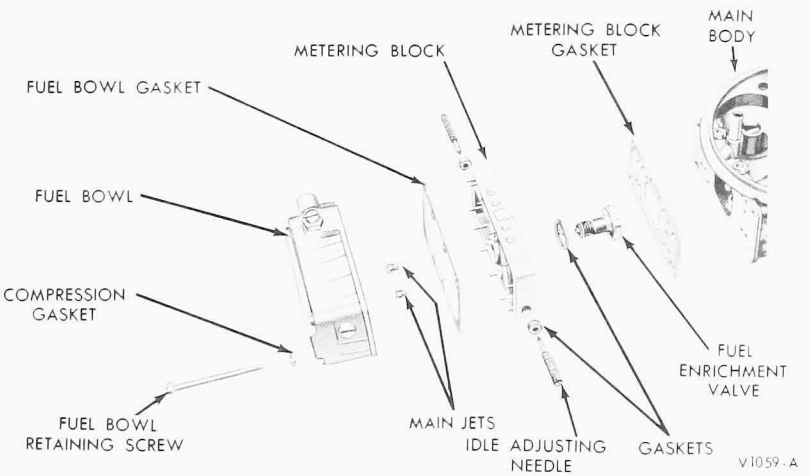

FIG. 29 Secondary Fuel Bowl and Metering Block Assembly

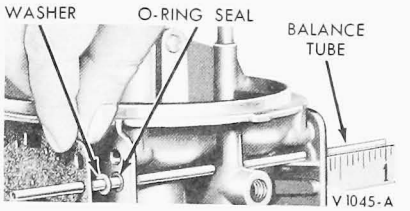

FIG. 30 Installing Balance Tube

gasket on the dowels on the back of the metering block. Lay the metering block in position on the main body. Position the fuel bowl gasket in the metering block. Place the retaining screws with new compression gaskets in the fuel bowl. Lay the bowl in place on the metering block and tighten the attaching screws.

11. Apply Vaseline to the fuel line O-ring seal and place the seal against the flange on one end of the fuel line and install this end of the line in the primary fuel bowl.
12. Assemble the secondary fuel bowl by following steps 2, 3, 4, 5, 6 and 7.
13. Install the following parts in the secondary metering block:

Using a jet wrench, install the secondary main jets.

14. Apply Vaseline to a new O-ring seal and slide it on the end of the balance tube protruding from the secondary side of the main body. Press the seal into the recess in the main body. Slide the washer on the tube and press it into the recess in the main body so that it covers the O-ring seal.
15. Install the metering block, fuel bowl, and gaskets by following step 10.

PART 24-30 Fuel Pump—Mechanical

This Information Applies To All Engines Except 401, 477 and 534 CID

COMPONENT INDEX	Page	COMPONENT INDEX	Page
CAPACITY TEST	30-02	FUEL PUMP ASSEMBLY	
CARTER FUEL PUMP (EXCEPT PERMANENTLY SEALED TYPE)		Description	30-01
		Installation	30-03
Assembly	30-03	Removal	30-03
Disassembly	30-03		
CARTER PERMANENTLY SEALED FUEL PUMPS		PRESSURE TESTS	30-02
Assembly	30-03	SPECIFICATIONS	30-04
Disassembly	30-03		

DESCRIPTION

Single-action mechanical fuel pumps are standard equipment for all engines except the 401, 477 and 534 V-8's.

The mechanical fuel pumps on 6-cylinder engines are mounted on the lower, left-center of the engine cylinder block.

On all V-8 engines, the mechanical fuel pumps are mounted on the left side of the cylinder front cover.

A Carter design fuel pump (Fig. 1) with a long-life, disposable type integrally mounted fuel filter on the pump body is used on the 300 HD Six, and the 330, 361 and 391 V-8 engines.

Carter permanently sealed design fuel pumps with integral fuel filters are used on the 240, 300 Six and the 360 and 390 V-8 engines (Fig. 2) for light and medium duty F, B, LN and P-Series trucks. The Bronco and Econoline engines also use permanently-sealed fuel pumps (Figs. 3 and 4), but with separate in-line fuel filters.

The fuel pumps are mechanically actuated by means of the fuel pump rocker arm and an eccentric on the camshaft.

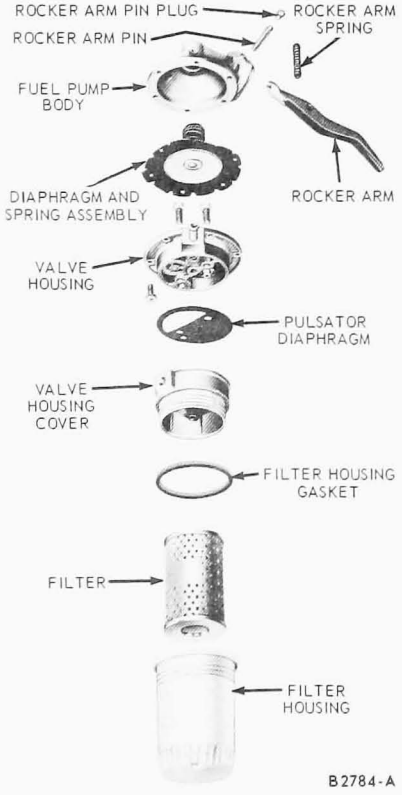

FIG. 1 Carter Fuel Pump — 300 HD Six, and 330, 361 and 391 V-8 Engines

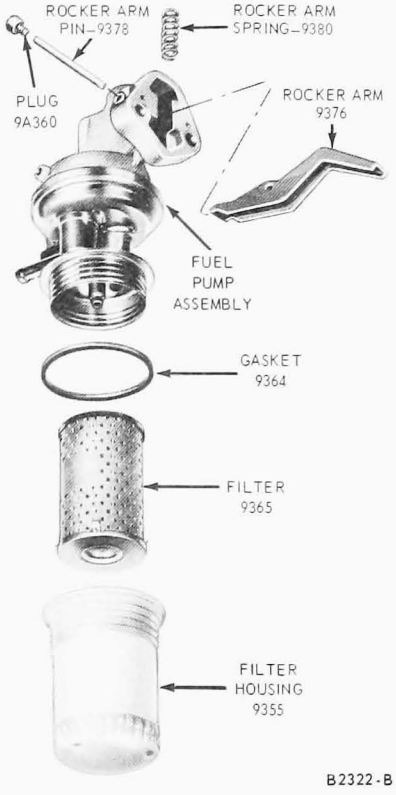

FIG. 2 Carter Sealed Design Fuel Pump — 240, 300 Six and 360 and 390 V-8 Engines

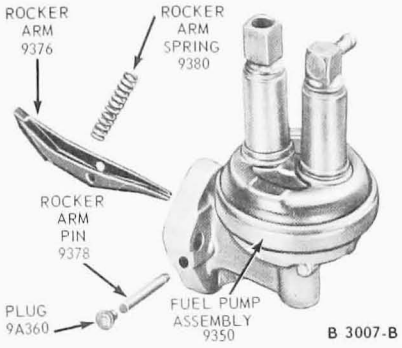

FIG. 3 Carter Permanently-Sealed Fuel Pump for Bronco and Econoline Six

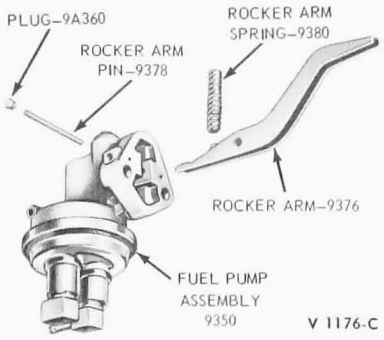

FIG. 4 Carter Permanently Sealed Fuel Pump for Bronco and Econoline V-8 Engines

TESTING

To determine that the fuel pump is in satisfactory operating condition, tests for both fuel pump pressure and fuel pump capacity (volume) should be performed.

The tests are performed with the fuel pump installed on the engine and the engine at normal operating temperature at idle speed.

Before the tests, make sure the replaceable fuel filter has been changed within the recommended maintenance mileage interval. When in doubt, install a new filter.

PRESSURE TESTS

Refer to the fuel pump specification in this Part, and note the fuel pump pressure and capacity (volume) design tolerances.

1. Remove the air cleaner assembly. Disconnect the fuel inlet line or the fuel filter at the carburetor. **Use care to prevent combustion due to fuel spillage.**
2. Connect a pressure gauge, a restrictor and a flexible hose (Fig. 5) between the fuel filter and the carburetor.
3. Position the flexible hose and the restrictor so the fuel can be discharged into a suitable, graduated container (Fig. 5).
4. Before taking a pressure reading operate the engine at the specified idle rpm and vent the system into the container by opening the hose restrictor momentarily.
5. Close the hose restrictor, allow the pressure to stabilize, and note the reading. Refer to the Specifications Section in this Part.

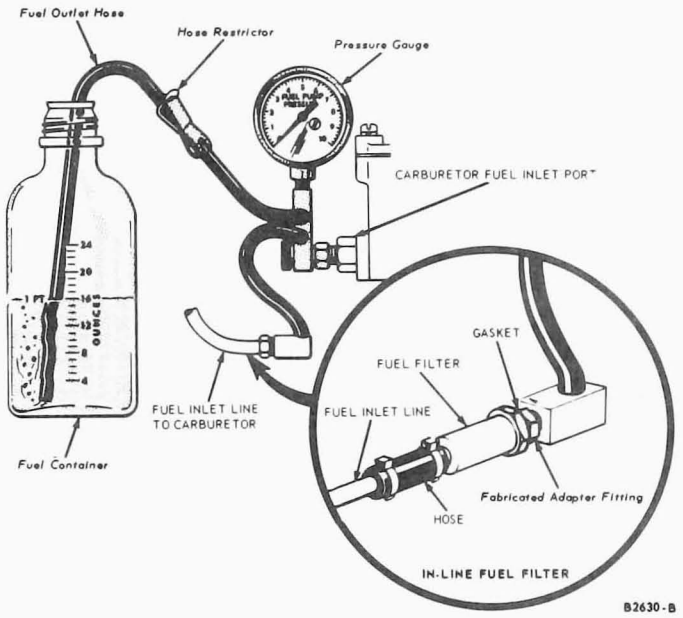

FIG. 5 Typical Fuel Pump Pressure and Capacity Test Equipment

If the pump pressure is not within specifications, and the fuel lines and filter are in satisfactory condition, the pump is defective and should be replaced.

If the pump pressure is within specifications, perform the tests for fuel capacity (volume).

CAPACITY (VOLUME) TEST

With the fuel pump pressure within specifications, test the capacity (volume) as follows:

1. Operate the engine at the specified idle rpm.
2. Open the hose restrictor and expel the fuel into the container (Fig. 5), while observing the time required to expel one pint. Close the restrictor. One pint or more of fuel should be expelled within the specified time limit.

If the pump volume is below specifications, repeat the test using an auxiliary fuel supply and a new fuel filter. If the pump volume meets specifications while using the auxiliary fuel supply, check for a restriction in the fuel supply from the tank and for the tank not venting properly.

REMOVAL AND INSTALLATION

FUEL PUMP ASSEMBLY

REMOVAL

1. Disconnect the inlet and outlet lines at the fuel pump.
2. Remove the pump attaching screws, then remove the pump and the gasket. Discard the gasket.

INSTALLATION

1. Remove all the gasket material from the mounting pad and pump flange. Apply oil-resistant sealer to both sides of a new gasket and to the threads on the attaching bolts.
2. Position the new gasket on the pump flange and hold the pump in position against the mounting pad. Make sure the rocker arm is riding on the camshaft eccentric. (Turn engine over until the fuel pump eccentric is on the low side of the stroke.)
3. Press the pump tight against the pad, install the attaching screws and alternately torque them to specifications.
4. Connect the fuel inlet and outlet lines.
5. Operate the engine and check for leaks.

DISASSEMBLY AND ASSEMBLY

CARTER FUEL PUMP (EXCEPT PERMANENTLY SEALED TYPE)

DISASSEMBLY

1. Remove the filter housing, gasket and filter element. Discard the filter element.
2. Scribe marks on the fuel pump body, valve housing and valve housing cover so that these parts can be assembled in their original position.
3. Remove the valve housing assembly. Separate the valve housing from the cover and note the position of the pulsator diaphragm so that it can be assembled in its proper position. **Do not remove the fuel valves from the valve housing. The valve housing is replaced as an assembly.**
4. Scrape away the staking mark and remove the rocker arm pin seal plug as shown in Fig. 6.
5. Press the fuel pump diaphragm into the fuel pump body to release the tension on the rocker arm and allow the rocker arm pin to fall out. If the pin does not come out freely, use needle nose pliers (Fig. 7).
6. Press the diaphragm into the fuel pump body and pull the rocker arm out to unhook the rod from the rocker arm link (Fig. 8). Remove the rocker arm spring.
7. Remove the fuel pump diaphragm assembly. Do not disassemble as the diaphragm and spring are serviced as an assembly only.

ASSEMBLY

1. Insert the rocker arm spring into the fuel pump rocker arm cavity. Insert the rocker arm into the cavity.
2. Position the fuel pump diaphragm assembly into the pump body, then apply pressure on the diaphragm spring so that the rocker arm can be hooked on the rod.
3. Align the rocker arm pin holes by applying slight pressure on the diaphragm spring, then install the rocker arm pin (Fig. 7). **Make certain the rocker arm spring is properly positioned on the spring locater on the rocker arm.**
4. Install a new rocker arm pin seal plug. Stake the plug in position.
5. Place a new pulsator diaphragm on the valve housing in the position previously noted during disassembly (opening in the diaphragm over the fuel inlet chamber as shown in Fig. 9). Position the cover on the valve housing, aligning the scribe lines on the cover with the line on the valve housing. Be sure the pulsator diaphragm extends evenly around the edge of the cover. Install and tighten the two attaching screws and lock washers inside the valve housing.
6. Align the scribe line on the valve housing and the line on the fuel pump body. Hold the valve housing assembly tight against the fuel pump body and install the six screws and lock washers. Be sure the fuel pump diaphragm extends evenly around the edge of the valve housing before tightening the attaching screws.
7. Install the fuel filter assembly. Refer to Fuel Filter Replacement (Part 24-51) for the proper procedure.

CARTER PERMANENTLY SEALED FUEL PUMPS

DISASSEMBLY

The fuel pump assembly is shown in Figs. 2, 3 and 4.

1. Remove the filter housing, gasket and filter element. Discard the gasket and the filter element.
2. Scrape away the staking mark and remove the rocker arm pin seal plug as shown in Fig. 6.
3. Release the tension on the rocker arm by pressing the arm downward against the diaphragm and against rocker arm spring pressure and allow the rocker arm pin to fall out. If the pin does not come out freely, tap the fuel pump assembly lightly on the bench until the pin sticks out of the bore and remove the pin with pliers. Remove the rocker arm and spring.

Clean and inspect the fuel pump component parts. Refer to Cleaning and Inspection (Part 24-01) for the proper procedure. Replace all worn or damaged parts.

ASSEMBLY

The fuel pump assembly is shown in Figs. 2, 3 and 4.

1. Insert the rocker arm spring into the spring guide bore in the dome of the fuel pump rocker arm cavity.
2. Insert the rocker arm into the cavity and hook it onto the diaphragm rod directly below the rod flange. Position the rocker arm spring over the spring locator on the rocker arm.

Align the rocker arm pin holes and install the rocker arm pin. **Make certain the rocker arm spring is properly positioned on the spring locater on the rocker arm.**

3. Install a new rocker arm pin plug. Stake the plug into position.
4. Install the fuel filter assembly. Refer to Fuel Filter Replacement (Part 24-51) for the proper procedure.

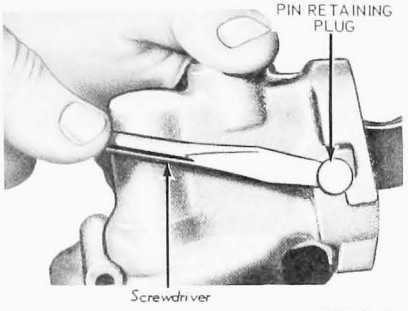

FIG. 6 Rocker Arm Pin Seal Plug Removal — Typical

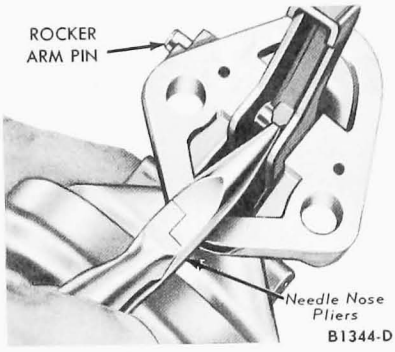

FIG. 7 Rocker Arm Pin Removal or Installation

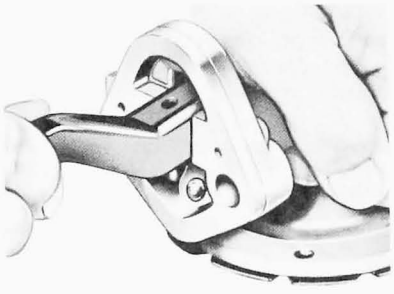

FIG. 8 Fuel Pump Diaphragm Removal or Installation

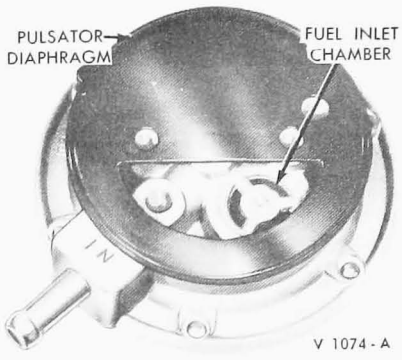

FIG. 9 Pulsator Diaphragm Installation

SPECIFICATIONS

MECHANICAL FUEL PUMPS

Fuel Pump Static Pressure–psi @ 500 Engine rpm	
240 and 300 Six	4.0–6.0
302, 330, 361, 390 and 391 V-8	4.5–6.5
Minimum Fuel Pump Volume – Flow @ 500 Engine rpm	
All Engines	1 pint in 30 seconds
Minimum Intake Static Vacuum–Inches of Mercury @ 500 Engine rpm	
All Engines	6
Eccentric Total Lift – Inches	
240 and 300 Six	0.290–0.310
302, 330, 360, 361 and 391 V-8	0.690–0.710

CV 1076-C

PART 24-31 Fuel Pump—Electric

This Information Applies To: 330, 361, 391, 401, 477 and 534 CID Engines

COMPONENT INDEX	Page
CLEANING AND INSPECTION	31-02
FUEL PUMP ASSEMBLY	
Description	31-01
Installation	31-02
FUEL PUMP ASSEMBLY - Continued	
Removal	31-02
SPECIFICATIONS	31-02
TESTING	31-01

DESCRIPTION

The electric fuel pump used for the various truck models is the submerged-type, mounted in the fuel tank(s).

The pump has a completely enclosed dry motor. The motor operates the pump impeller by means of a magnetic coupling which protects the motor from burn-out should the impeller become locked. Since the pump does not depend upon the engine for power, it delivers a constant supply of fuel to the carburetor, eliminating fuel starvation periods during cranking or extreme high speed operation.

An electric primer switch, located on the instrument panel, is engaged before starting the engine. This actuates the fuel pump to fill the carburetor fuel bowl. An oil pressure safety switch shuts off the fuel pump when the engine stops or whenever engine oil pressure drops to a low level.

TESTING

Refer to Fig. 1.

1. Remove the air cleaner.
2. Disconnect the fuel line from the carburetor.
3. Using 1/4-inch pipe fittings, install a pressure gauge (0-15 psi), and a 1/4-inch gate valve to the carburetor fuel inlet line. Use of smaller than 1/4-inch fittings will restrict the fuel flow.
4. Install a flexible hose in the gauge valve so that the fuel can be expelled into a suitable container.
5. Operate the fuel pump with the primer switch. **Be sure the battery is fully charged.** Adjust the gate valve to obtain the specified pressure (Specifications Section in this Part). Expel the fuel into a suitable container. Engage the primer switch and observe the time required to expel one pint. Refer to the Specifications Section in this Part for the correct volume of fuel. **Timing must be started at the instant fuel is expelled from the hose and not when the primer switch is closed.**

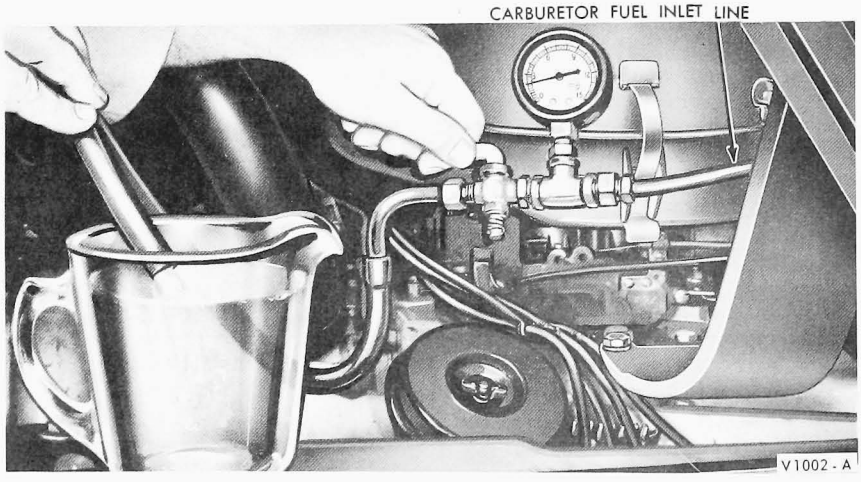

FIG. 1 Testing Electric Fuel Pump — Typical

6. If the fuel flow is below specified requirements, check the fuel pump at the outlet in the tank. This check will establish whether there is a restriction in the fuel line or the fuel pump is not working properly. At the fuel tank outlet, the fuel pump pressure and capacity should be within specifications. **The electric fuel pump is replaced as an assembly.**
7. Remove the test equipment and connect the fuel line.
8. Install the air cleaner.

REMOVAL AND INSTALLATION

FUEL PUMP ASSEMBLY

Removal

1. Disconnect the battery.
2. Disconnect the fuel outlet line at the fuel pump cover (Fig. 2). Remove the wire harness housing cover from the fuel pump cover. Disconnect the wires.
3. Remove the fuel pump cover and set it to one side.
4. Reach down into the fuel tank and disconnect the toggle clamp that secures the fuel pump in the retaining bracket and remove the fuel pump.
5. Disconnect the fuel outlet tube at the cover and fuel pump (Fig. 2). Remove the fuel pump wire assembly at the cover and fuel pump.

Installation

1. Remove the old gasket material from the fuel pump cover.
2. Position a new gasket on the cover.
3. Connect the fuel outlet tube to the cover and to the new pump (Fig. 3).
4. Connect the electric wire to the cover and the new pump.
5. Install the new fuel pump in the bracket in the tank. Fasten the toggle clamp.
6. Position the cover assembly on the tank and install the attaching screws and wire clamps. Connect the fuel line to the fitting on the cover (Fig. 4). Position the wiring harness in its housing on the cover (Fig. 3). Install the wire harness housing cover (Fig. 5).
7. Connect the battery.

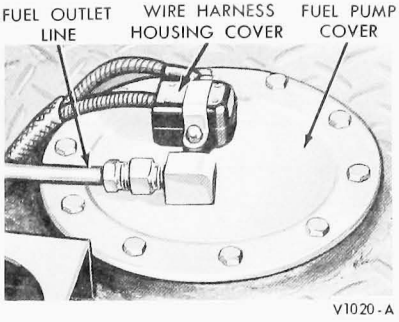

FIG. 2 Electric Fuel Pump Connections

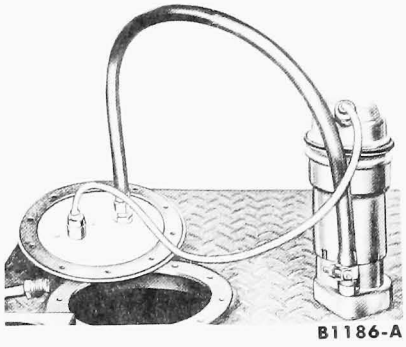

FIG. 3 Fuel Pump Installation

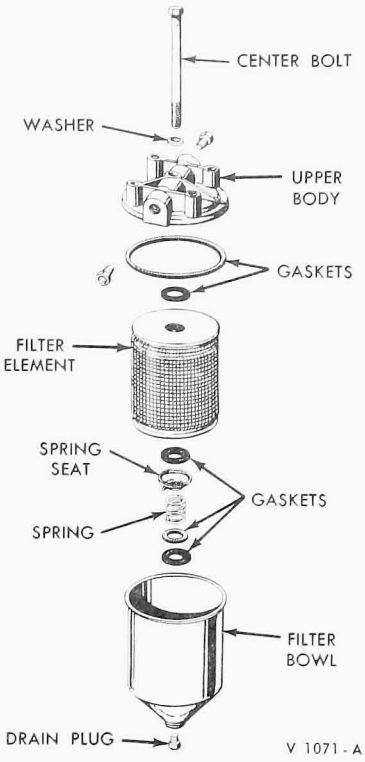

FIG. 4 Fuel Filter Assembly

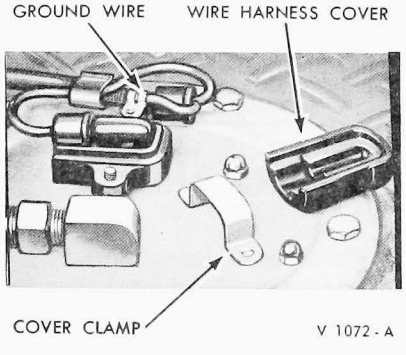

FIG. 5 Wiring Harness Installation

CLEANING AND INSPECTION

The electric fuel pump is replaced as an assembly and should not be disassembled for cleaning and inspection purposes. Refer to the Wiring Diagram Manual, Form 7795P-73, for schematics and locations of wiring harnesses and related parts.

SPECIFICATIONS

ELECTRIC FUEL PUMPS

Minimum Volume (Flow) @ 11.8–12.3 volts and 2 psi	
330	1 quart within 40 seconds
361	1 quart within 37 seconds
391	1 quart within 34 seconds

Minimum Volume (Flow) @ 11.8–12.3 volts and 2 psi	
401	1 quart within 36 seconds
477	1 quart within 33 seconds
534	1 quart within 30 seconds

PART 24-40 Air Cleaner—Oil Bath Type

This Information Applies To: All Gasoline Engines Except 170 CID

COMPONENT INDEX	Page	COMPONENT INDEX	Page
AIR CLEANER ELEMENT CLEANING	40-01	DESCRIPTION	40-01
AIR CLEANER OIL RESERVOIR	40-01	REMOVAL AND INSTALLATION	40-01

DESCRIPTION

Oil bath air cleaners are standard on all P, C, F and B-Series trucks and on L, LN, LT and LNT-Series trucks with 240, 300, 330, 361 and 391 CID engines. An optional oil bath air cleaner is available on Bronco with 302 CID engine, Econoline with 240 or 302 CID engine and F-100-350 with all engines.

Air from the air intake duct assembly enters the air cleaner. The air passes down between the outside walls of the air cleaner into the oil reservoir. The air is then deflected up through the filter element, and then down the center of the air cleaner to the carburetor. As the air rushes down across the oil and up, the large heavy dust particles fall into the oil. The smaller remaining dust particles are trapped in the oil-dampened filter.

REMOVAL AND INSTALLATION

Illustrations of the various types of air cleaners for the vehicle models and engine applications are shown in Figs. 1 thru 4 in Part 24-41. Reference to the illustrations will enable the mechanic to perform the required removal and installation and/or repair operations.

CLEANING AND INSPECTION

Clean the air cleaner oil reservoir and screen and refill with new oil at the recommended service interval.

Remove the oil reservoir from the air cleaner body and dispose of the oil. Clean the reservoir and screen with solvent or kerosene and dry with compressed air. Fill the reservoir with clean, fresh oil of the weight and grade used in the engine crankcase. Inspect the air cleaner element for dirt, leaves or other foreign material and clean as required.

Install the oil reservoir on the air cleaner.

AIR CLEANER ELEMENT CLEANING

Clean the filter element as required with kerosene or solvent (do not use gasoline) and drip dry. Wet the element with lubricating oil of the type used in the oil reservoir.

PART 24-41 Air Cleaner—Dry Type

This Information Applies To: All Gasoline Engines

COMPONENT INDEX	Page	COMPONENT INDEX	Page
AIR CLEANER BODY	41-09	Cleaning with Compressed Air	41-08
DESCRIPTION	41-01	Cleaning with Water	41-08
FILTER ELEMENT	41-08	REMOVAL AND INSTALLATION	41-01

DESCRIPTION

Dry type air cleaners are standard on all F-100-350, Bronco and Econoline Series trucks and on super duty engines in L, LN, LT and LNT series trucks. An optional dry type air cleaner is available on super duty engines in C-Series trucks and on 330, 361 and 391 CID engines in L, LN, LT and LNT series trucks. An air restriction gauge is installed on dry air cleaners used on super duty engines and on 330, 361 and 391 CID engines.

Air passes into the air cleaner and through a chemically treated and pleated paper element before entering the engine induction system.

REMOVAL AND INSTALLATION

Illustrations of the various types of air cleaners for the vehicle models and engine applications are shown in Figs. 1 thru 13. Reference to the illustrations will enable the mechanic to perform the required removal and installation and/or repair operations.

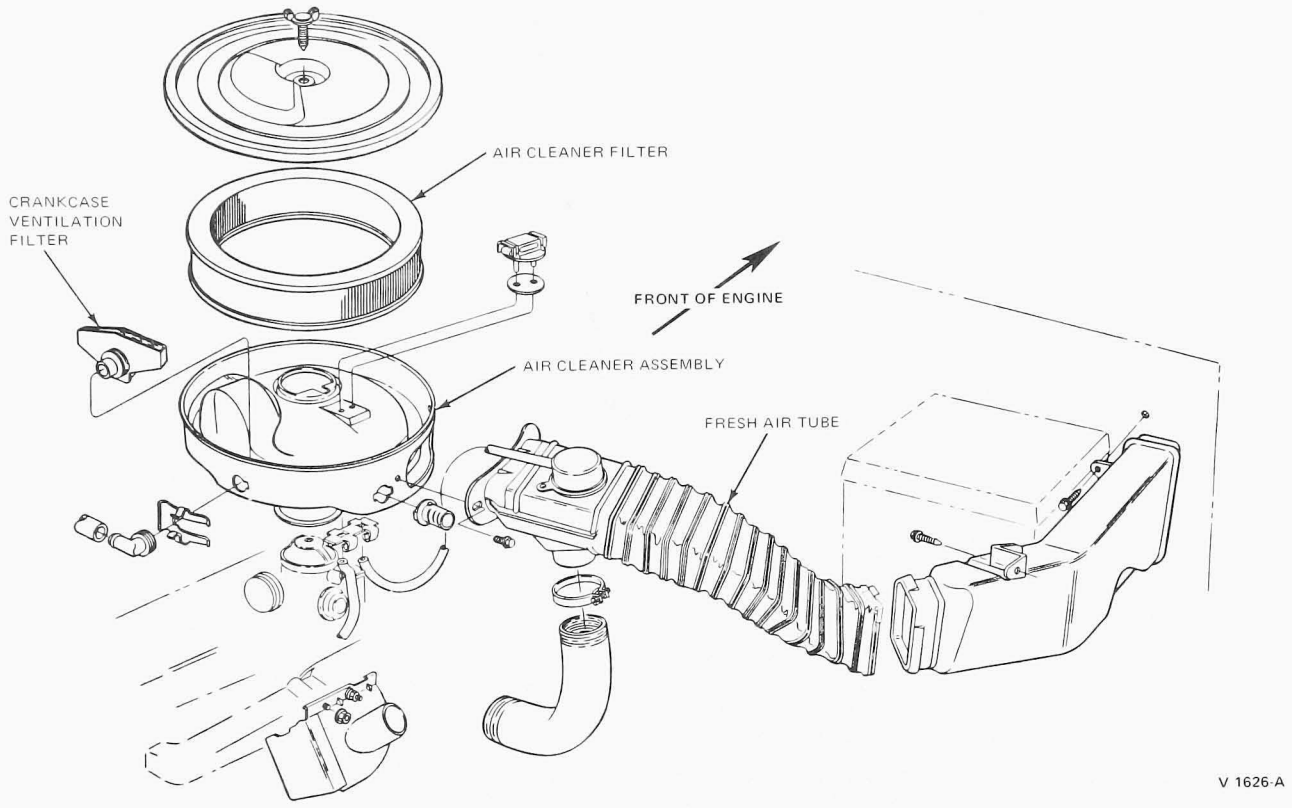

FIG. 1 Air Cleaner Assembly—Typical Bronco 200, F-100 240, 302, 330, 360, 390 Engine

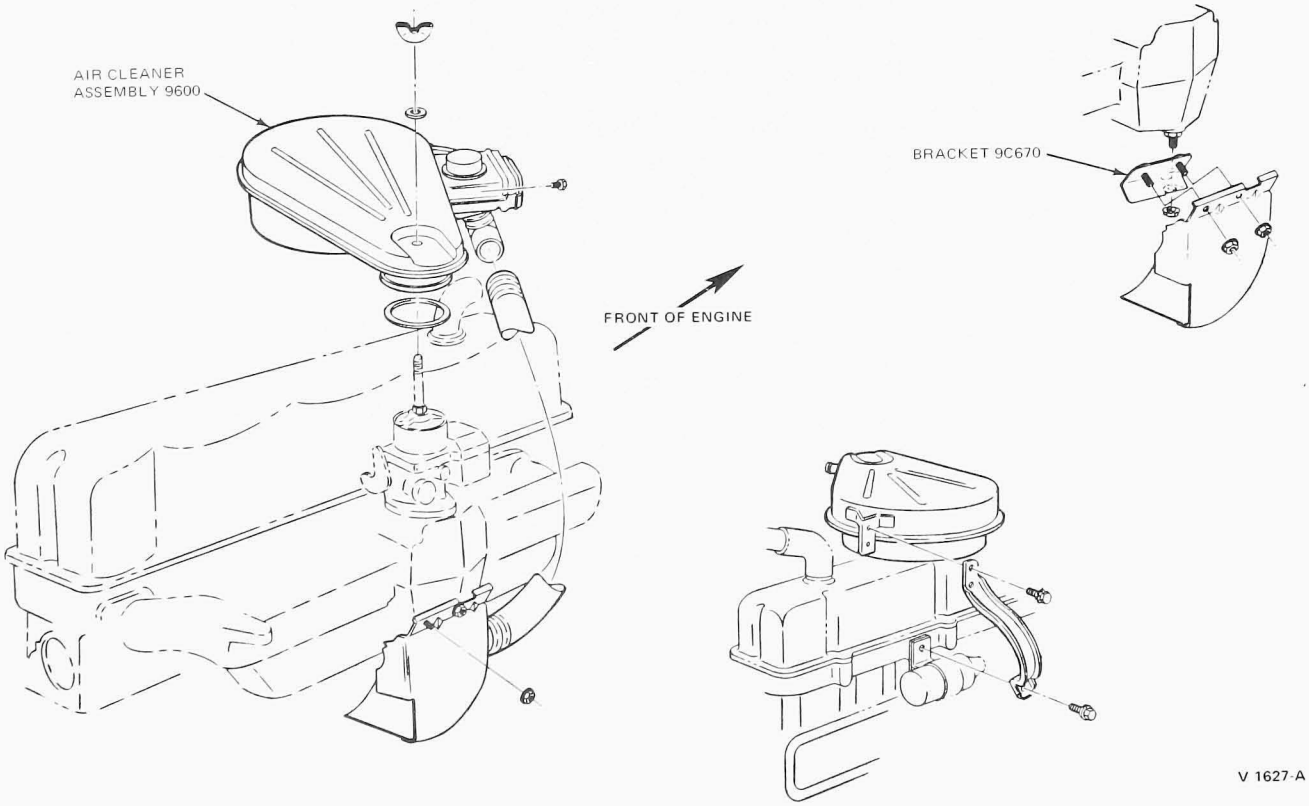

FIG. 2 Air Cleaner Assembly—Econoline 240, 300 Engine

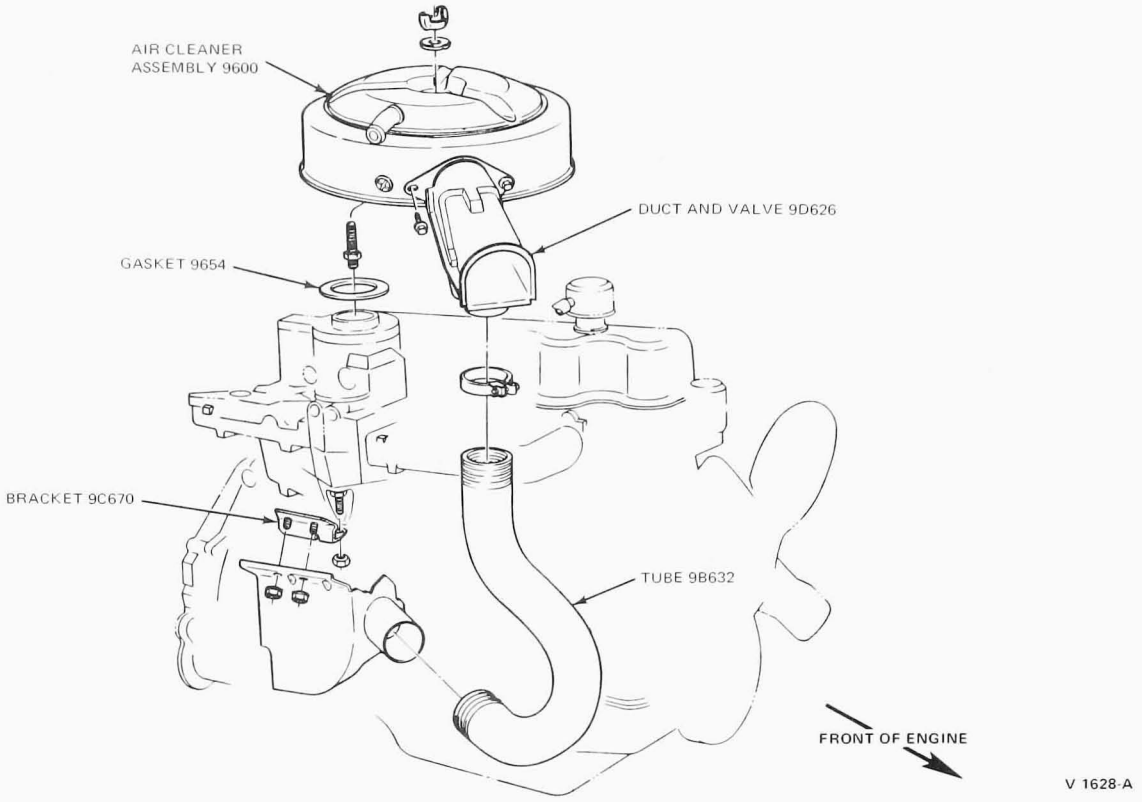

FIG. 3 Air Cleaner Assembly—F250-350 300 Engine

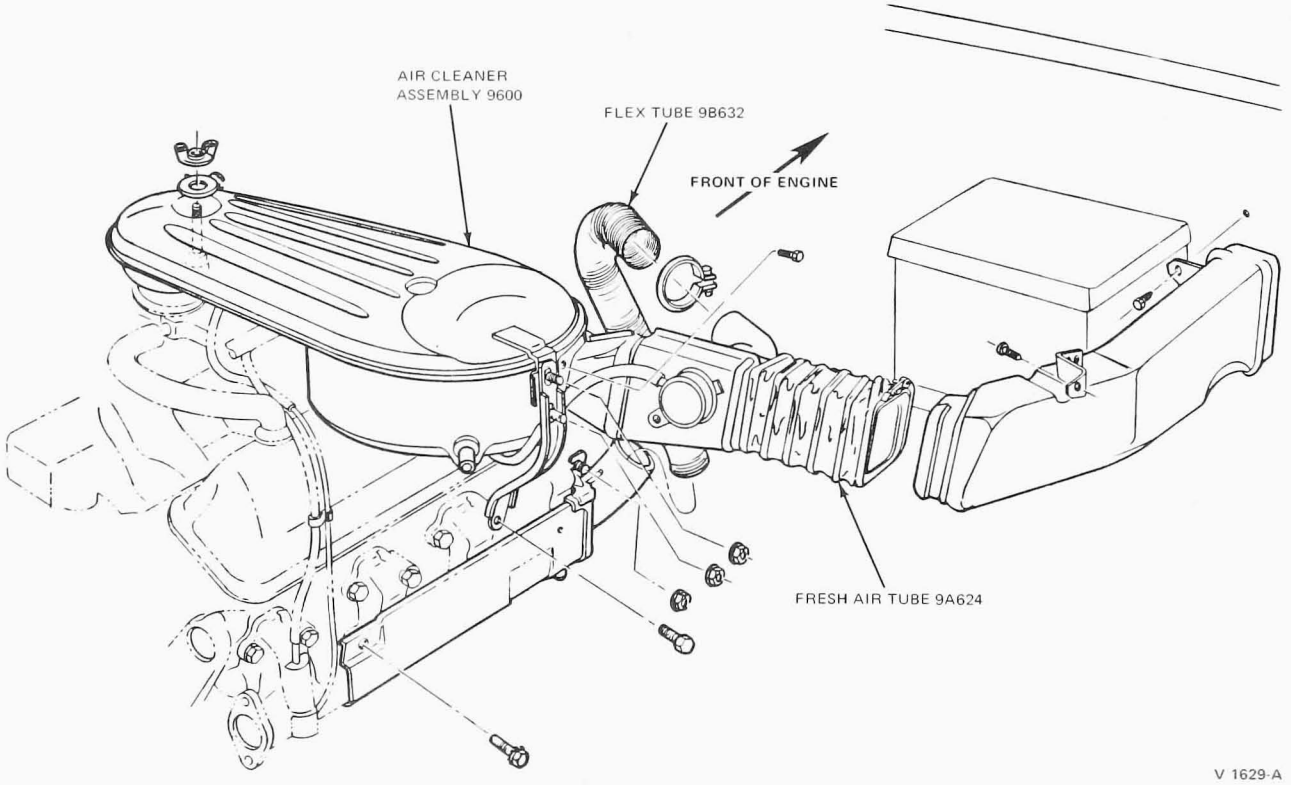

FIG. 4 Air Cleaner Assembly—Bronco 302 Engine

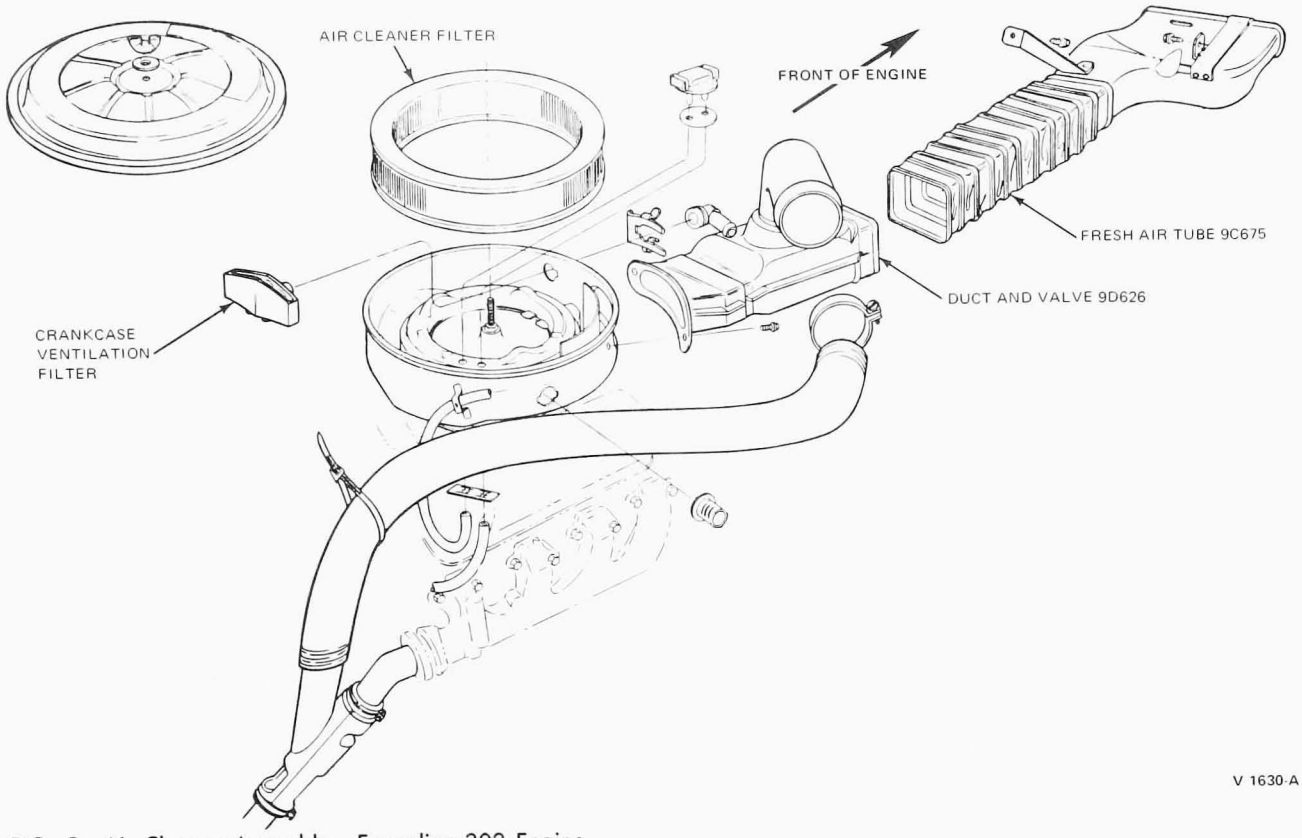

FIG. 5 Air Cleaner Assembly—Econoline 302 Engine

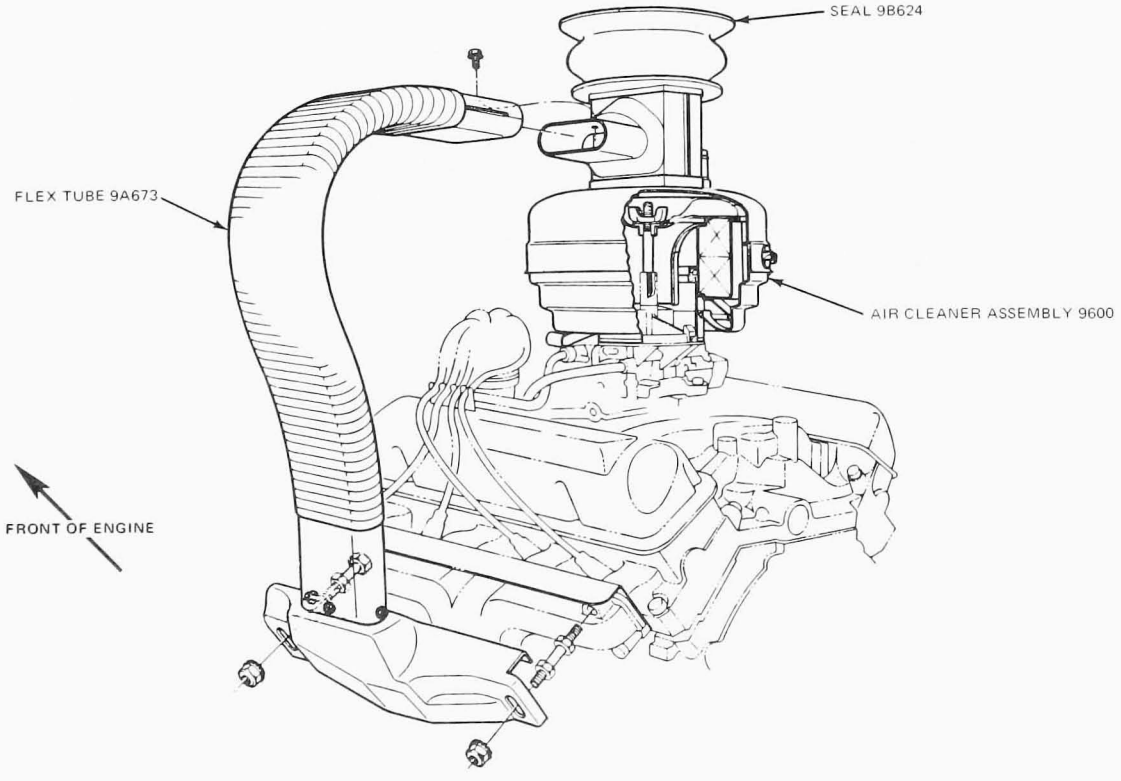

FIG. 6 Air Cleaner Assembly—C Series with 330 HD and 361 Engine

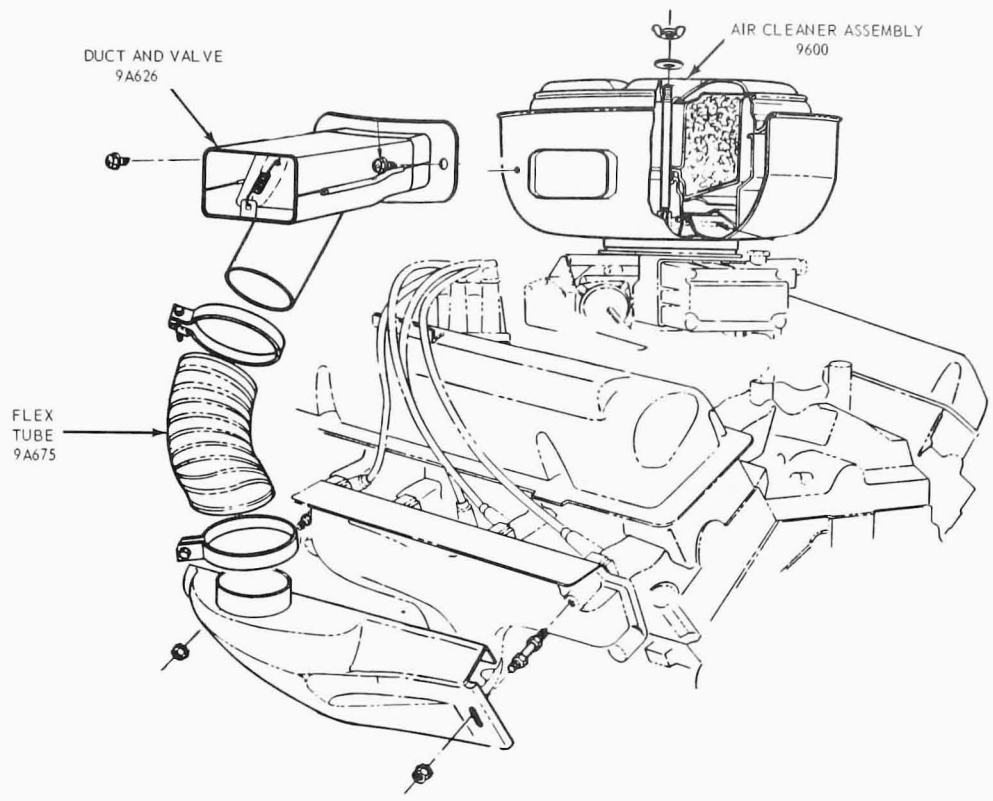

FIG. 7 Air Cleaner Assembly—C-600 with 330 HD Engine

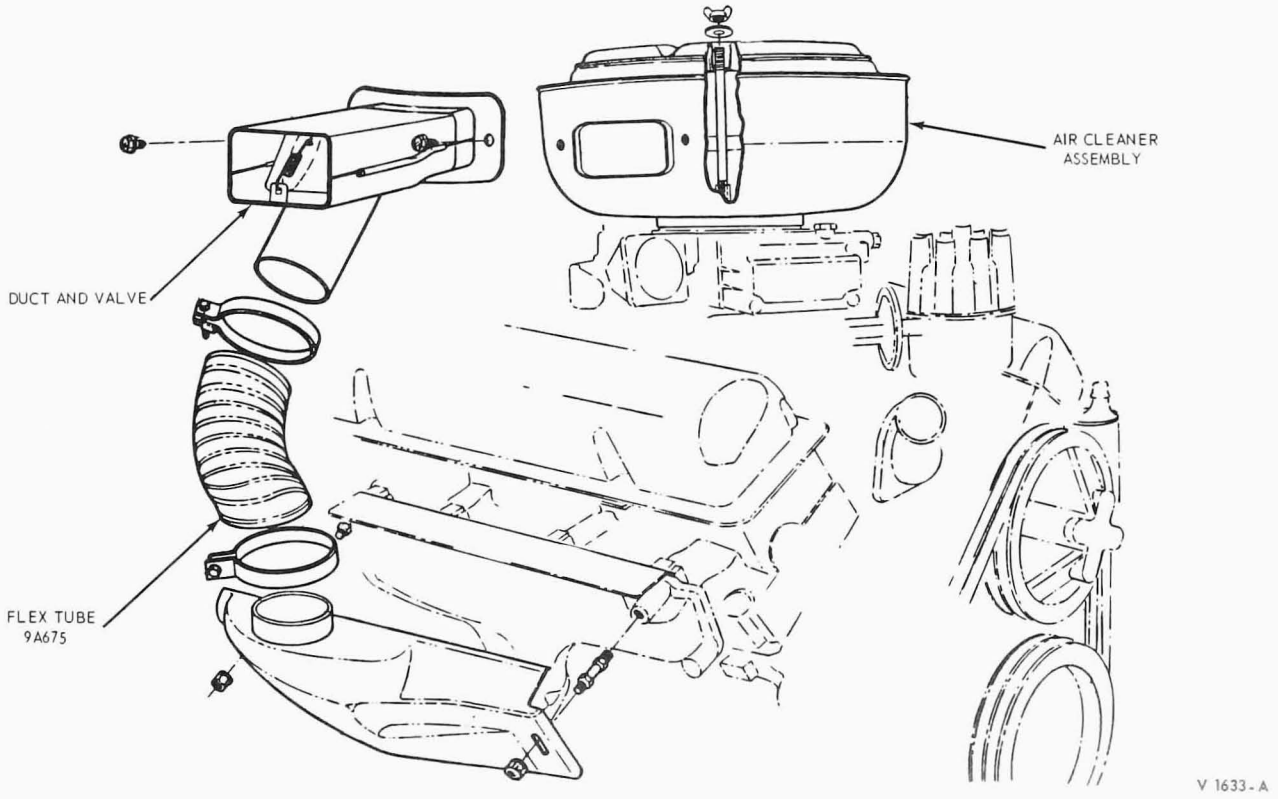

FIG. 8 Air Cleaner Assembly—F,B-500, F-B-N 600-700-330, 361, 391 Engines

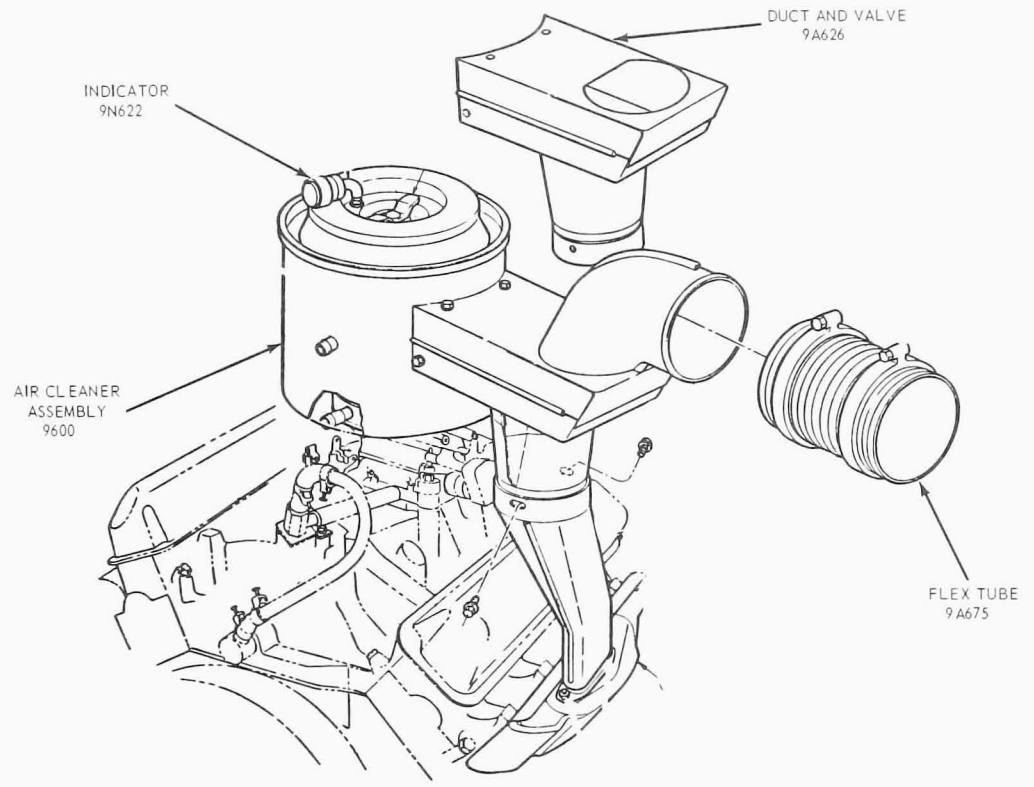

FIG. 9 Air Cleaner Assembly—Optional-N-750, F-B-N-800

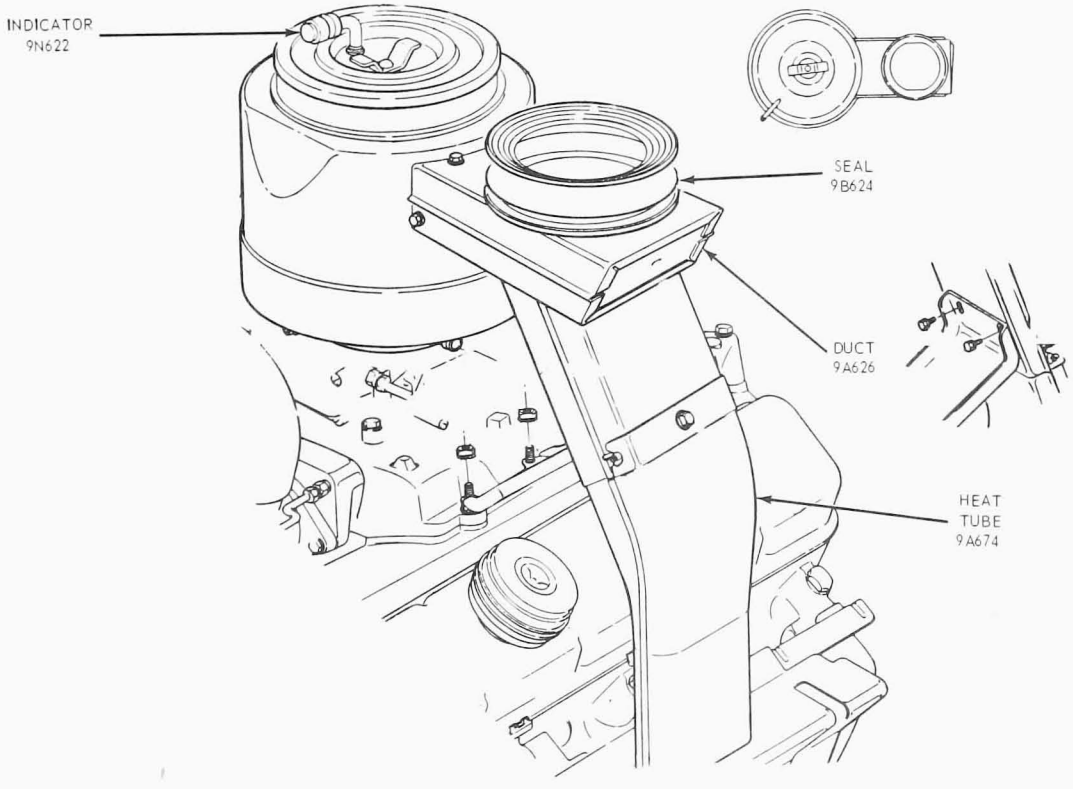

FIG. 10 Air Cleaner Assembly—C and CT Series with Super Duty Engines

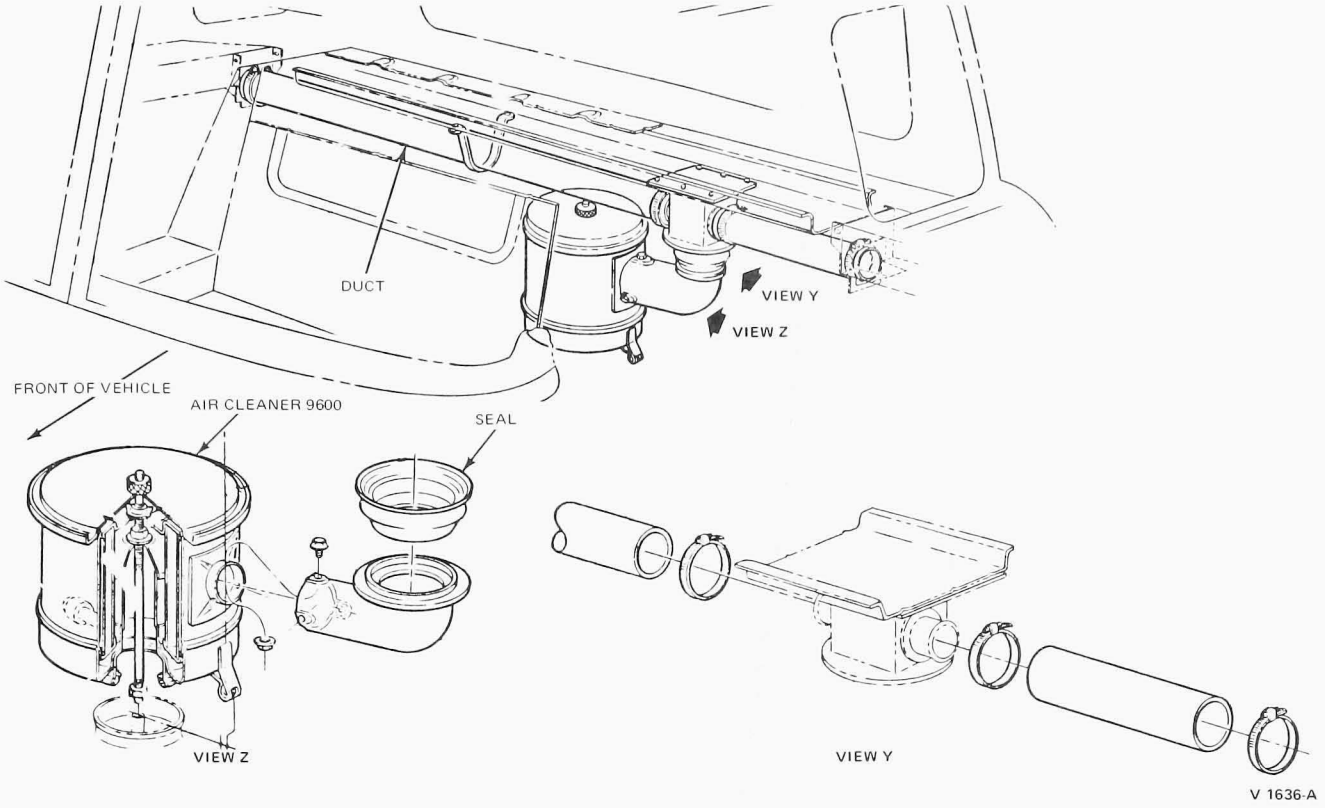

FIG. 11 Air Cleaner Assembly—C-6000-8000 Series

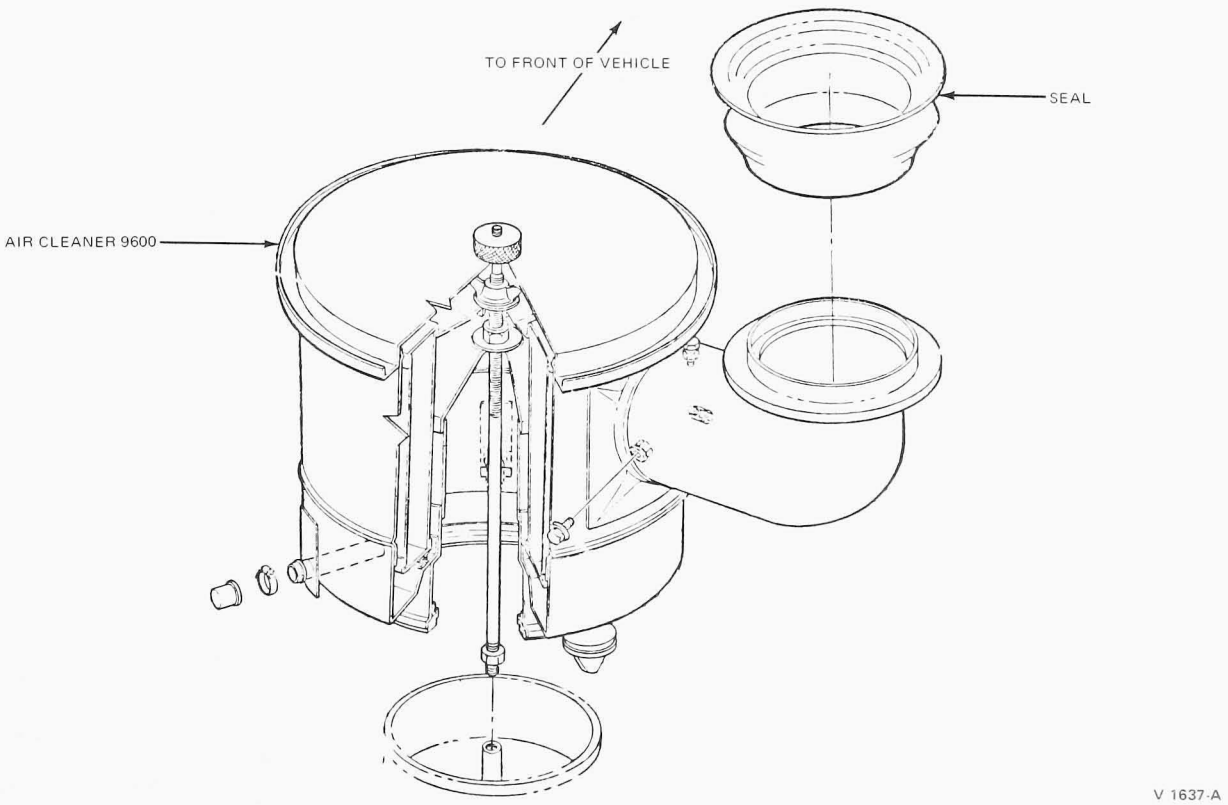

FIG. 12 Air Cleaner Assembly—F-6000-7000 Series

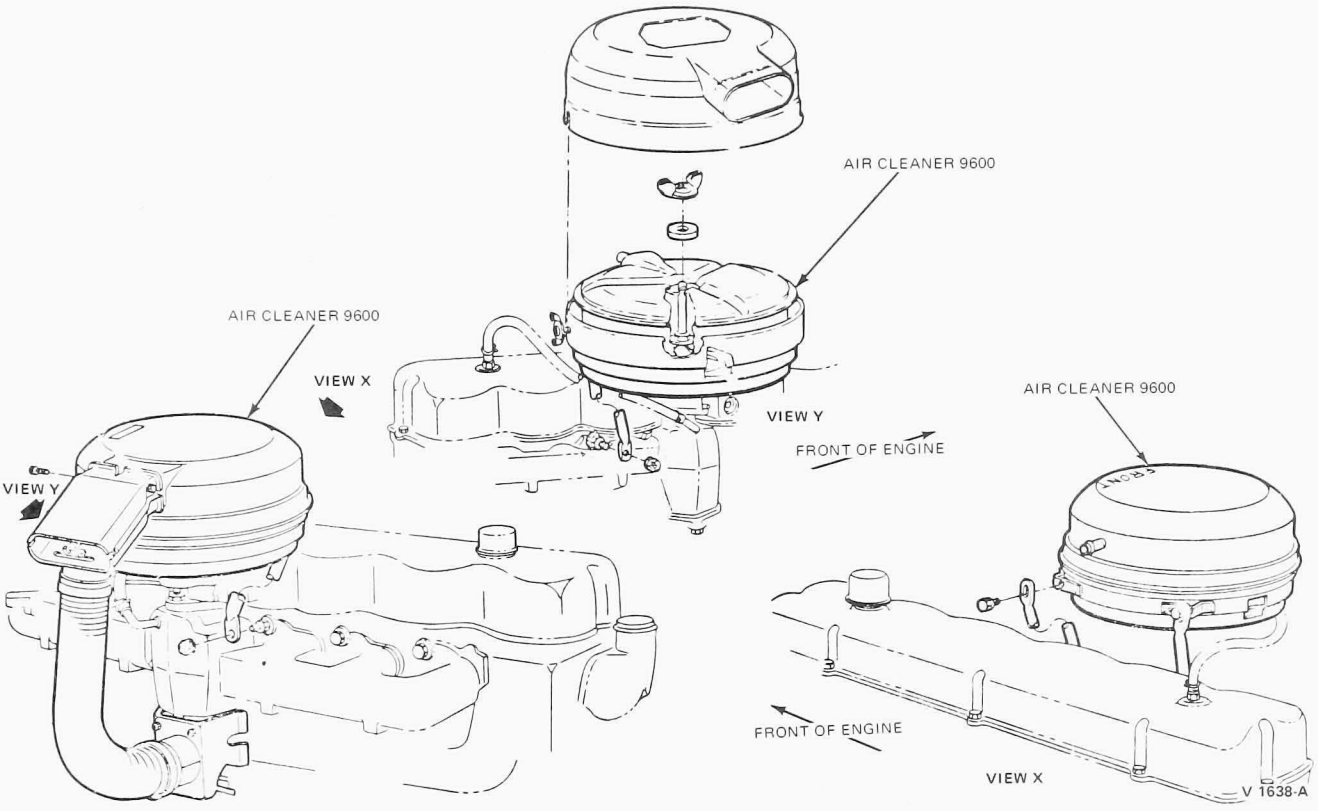

FIG. 13 Air Cleaner Assembly—B-N-600

CLEANING AND INSPECTION

Refer to the 1973 Truck Maintenance and Lubrication Manual for the recommended maintenance mileage interval.

Dry type air filter elements are normally replaced, however, dry type air cleaner elements used on 330, 361, 391 CID Medium and Heavy Duty engines and on 401, 477 and 534 CID Super Duty engines can be cleaned to prolong their service life.

An air restriction indicator (Fig. 14) is installed on the air cleaner. The indicator will read RED when the air cleaner restriction reaches 20 inches of water.

The restriction indicator must be reset after the air cleaner has been serviced.

Washing in water or blowing with compressed air are two accepted methods for cleaning elements of the Cyclopac air cleaners. If elements regularly contain substantial amounts of soot or oil fumes, washing in water works better than compressed air. If the contaminant on the element is mostly dust, either method works well. Elements that are cleaned with compressed air can be put back into service immediately. Washed elements must be dried before they are used.

Some elements are partially covered by a plastic sleeve with fins. The covered portion can be cleaned with water or air without removing the sleeve. Use a stiff fiber (not wire) brush to remove oil and grease deposits from the sleeve and fins. **Do not remove plastic sleeve and fins from the element.**

CLEANING

CLEANING WITH COMPRESSED AIR

1. Direct a jet of clean, dry air from the inside of the filter element, perpendicular to the pleats. **Pressure at air nozzle must not exceed 100 psi.**
2. Move the air jet up and down along the pleats, slowly rotating the element, until no more dust is being removed. **Be certain that the element is not ruptured by the nozzle or the air jet.**

CLEANING WITH WATER

The elements can be cleaned by washing with water and a good non-sudsing detergent. Direct a jet of clean, dry air from the inside of the filter element. When the loose dust and soot have been removed, the element is ready to be washed.

1. Dissolve the detergent in a small amount of cool water.
2. Add warm (approximately 100 degrees F) water to get the proper proportions of detergent and water (about one cup of detergent to five gallons of water).
3. Soak the element in the solution for at least 15 minutes.

4. Agitate the element for about 2 minutes to loosen the dirt.

Never use gasoline or solvents to clean elements.

5. Rinse the element with clean water until the water coming through the element is clean. Water pressure from a hose or tap should not be over 40 psi. Air-dry the element thoroughly before using.

Mechanized drying methods can be used. However, heated air (maximum temperature 180 degrees F) must have some circulation. **Do not use light bulbs for drying elements.**

6. After cleaning the filter element, using either air or water, inspect the element for damage. Look for dust on the clean air side, the slightest rupture, or damaged gaskets. A good method to detect ruptures in the element is to place a light inside the element and look toward the light from the outside. Any hole in the element, even the smallest, will pass dust to the engine and cause unnessary wear.

AIR CLEANER BODY CLEANING AND INSPECTION

Before re-installing the filter element, remove any foreign material (leaves, lint, or other foreign matter) that may have collected inside the air cleaner body. Inspect the inside of the body for dents or other damage that would interfere with air flow or with the fins on the element or inside the body. Repair body dents, being careful not to damage sealing surfaces.

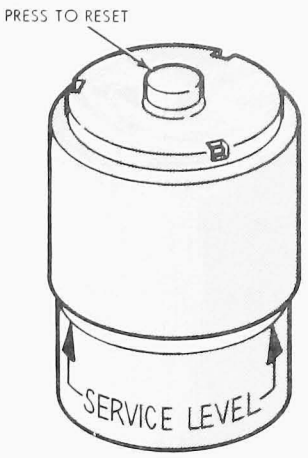

FIG. 14 Air Restriction Indicator

PART 24-42 Air Cleaner Duct Systems

This Information Applies To: All Gasoline Engines

COMPONENT INDEX	Page	COMPONENT INDEX	Page
ASSEMBLY	42-02	REMOVAL	42-02
DESCRIPTION	42-01	TESTING	42-01
DISASSEMBLY	42-02		
INSTALLATION	42-02		

DESCRIPTION

Fresh air or heated air from a shroud around the exhaust manifold is available to the engine.

A thermostatic bulb in the air duct is exposed to the incoming air. A spring-loaded valve plate is connected to the thermostatic bulb. The valve plate spring holds the valve in the closed (heat on) position until the thermostatic bulb overcomes the valve spring tension.

During the engine warm-up period when the air entering the air duct is less than 75 degree F., the valve plate is held in the closed (heat on) position by the valve plate spring thus shutting off outside air. All air is then drawn from either the engine compartment or the shroud around the exhaust manifold.

As the temperature of the air passing the thermostatic bulb approaches 85 degrees F., the thermostat starts to expand, and pulls the valve plate down. This allows a combination of cooler outside air and heated air to enter the air cleaner. When the temperature of the heated air reaches approximately 100 degrees F., the valve plate will be in the down position (heat off) so that only outside air is allowed to enter the air cleaner.

Failure of this system to function will affect the vehicle exhaust emission control system and may result in failure of the vehicle to meet Federal emission regulations as well as affecting driveability.

To determine whether the system is functioning properly, the following procedure should be used:

DUCT AND VALVE ASSEMBLY

1. With the duct assembly installed on the vehicle, cold engine, and ambient temperature in the engine compartment of less than 100 degrees F, the valve plate should be in the **heat-on** position (Fig. 1).
2. If the plate is not in the **heat-on position, check for possible interference of plate and duct which would cause the plate to bind in its given travel. Correct by realigning the plate if interference is present.**
3. Remove the duct and valve assembly from the vehicle.
4. Immerse the duct assembly in cool (below 75 degrees F) water so that the thermostat capsule is covered with water.
5. Raise the water temperature to 100 degrees F, allow 5 minutes to stabilize temperature, and observe the valve plate position. The correct position should be in the **heat-on position (Fig. 1).**
6. Increase the water temperature to 135 degrees F, allow five minutes to stabilize the temperature, and observe the valve plate. The valve plate should be in the **heat-off position (Fig. 1).**

If the valve plate does not meet the requirements as outlined in steps 5 and 6, and no plate and duct interference is observed, the duct and valve assembly should be replaced.

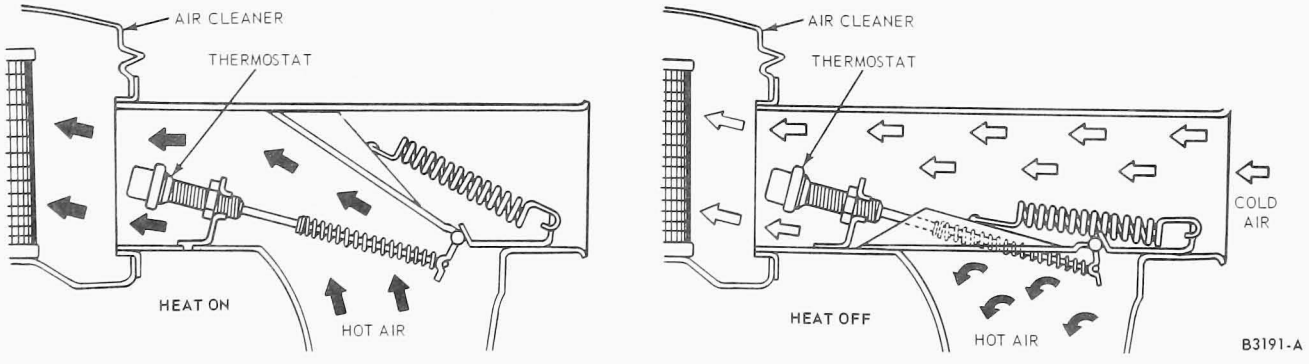

FIG. 1 Operation — Duct and Valve Assembly

REMOVAL AND INSTALLATION

DUCT AND VALVE ASSEMBLY

REMOVAL

1. Remove the retaining cap screws that secure the air intake duct and valve assembly to the air cleaner.
2. Remove the air intake duct and valve assembly from the engine.

INSTALLATION

1. Install the air intake duct and valve assembly on the shroud tube.
2. Connect the air intake duct and valve assembly to the air cleaner and tighten the retaining cap screws.

DISASSEMBLY AND ASSEMBLY

DUCT AND VALVE ASSEMBLY

DISASSEMBLY

1. If the duct and valve assembly was removed because of a suspected temperature malfunction, then check the operation of the thermostat and valve plate assembly. Refer to the Air Intake Duct Test under Testing in this Part for the proper procedure.
2. If inspection reveals that the valve plate is sticking or the thermostat is malfunctioning, remove the thermostat and valve plate as follows:

Detach the valve plate tension spring from the valve plate using long-nose pliers. Loosen the thermostat locknut and unscrew the thermostat from the mounting bracket. Grasp the valve plate and withdraw it from the duct.

ASSEMBLY

If it was necessary to disassemble the thermostat and air duct and valve, assemble the unit as follows:

1. Install the valve plate. Install the locknut on the thermostat, and screw the thermostat into the mounting bracket. Install the valve plate tension spring on the valve plate and duct.
2. Check the operation of the thermostat and air duct assembly. Refer to the Air Intake Duct Test under Testing in this Part for the proper procedure. Tighten the locknut.

PART 24-50 Fuel Tanks and Lines and Fuel Evaporative Emission Control System

Applies To All Models

COMPONENT INDEX	Page
AUXILIARY FUEL TANK	
UNDER-CAB	
Installation	50-14
Removal	50-14
FILLER PIPE	
Bronco	
Installation	50-15
Removal	50-15
Econoline	
Installation	50-15
Removal	50-15
In-Cab Fuel Tanks	
Installation	50-15
Removal	50-15
In-Frame Fuel Tank	
Installation	50-14
Removal	50-14
FUEL EVAPORATIVE EMISSION CONTROL SYSTEM	
Description	50-01
FUEL LINES-METAL	
Removal and Installation	50-15

COMPONENT INDEX	Page
FUEL LINES-NYLON	
Removal and Installation	50-15
FUEL TANK	
Bronco	
Installation	50-14
Removal	50-14
Econoline	
Installation	50-14
Removal	50-14
In-Cab	
Installation	50-13
Removal	50-13
In-Frame	
Installation	50-14
Removal	50-14
Outside-Frame	
Installation	50-13
Removal	50-13
Saddle Tanks	
Installation	50-13
Removal	50-13

DESCRIPTION

FUEL EVAPORATIVE EMISSION SYSTEM

All Bronco, Econoline and F-100 vehicles are equipped with a fuel evaporative emission system. This system is designed to limit fuel vapors released to the atmosphere.

On F-100 vehicles, the system consists of an evaporative emission type fuel tank, a U-shaped steel tube vapor vent chamber, a carbon canister, vapor vent tubes and various standard parts (Fig. 1). On F-100 vehicles equipped with an auxiliary fuel tank, the system uses an emission control valve rather than a vent chamber. This valve is located on top of the auxiliary tank (Fig. 2).

The Econoline fuel evaporative emission system makes use of an evaporative emission fuel tank, an emission control float valve, carbon canister, and vapor tubes (Fig. 3).

The Bronco fuel evaporative emission system makes use of an evaporative emission fuel tank, a vapor separator tank, and vapor tubes (Fig. 4).

On all vehicles, liquid fuel is prevented from entering the vapor lines by means of restricted orifices. In Econoline and F-100 vehicles equipped with aft-of-axle tanks the emission control valve prevents liquid fuel passage through the action of the float and needle valve inside the valve. In standard F-100 fuel tanks, the U-shaped

vapor vent chamber includes a 0.050 inch orifice while the Bronco uses a vapor separator tank as well as 0.050 inch orifice vapor tube to prevent liquid fuel from entering the vapor system. All vehicles use a carbon canister to store fuel vapor until it can be taken into the carburetor or cleaner and burned in the engine. In addition, all Bronco, Econoline, and F-100-350 vehicles make use of a fuel return line to assist in hot fuel handling. These lines run from the carburetor back to the fuel tank.

The fuel tanks for the various vehicle models are shown in Figs. 5 thru 11.

Refer to the specifications for the fuel tank usage and capacities for the various vehicle models.

The in-cab fuel tank is available on certain models of F-Series vehicles. It is located behind the drivers seat (Fig. 6). The fuel tank filler pipe extends from the left upper corner of the tank through the center rear quarter of the cab body. The filler pipe is connected to the tank with a rubber hose and two clamps. On a diesel engine equipped vehicle, the filler pipe connecting hose has an integral fitting for an attached fuel return hose and retaining clamp. A grommet insulates the filler pipe from the body. On a Diesel engine equipped vehicle, a grommet also insulates the fuel return line from the body. The fuel gauge sending unit and the fuel outlet line are mounted on the top of the tank. The tank is secured to the body in seven places as shown in Fig. 6. The tank does not contain a drain plug.

The rectangular, cylindrical, centerstep and full-step fuel tanks (Fig. 7) are located on the outside of the frame left and/or right side rail. The tanks are secured to the frame with brackets and straps. The fuel gauge sending unit and the fuel outlet line are located on the top of the tank.

The saddle fuel tank (Fig. 7) is mounted over the frame. The tank is secured to the frame with 4 bolts and brackets. Each side of the tank has a filler cap, fuel gauge sending unit and fuel outlet line mounted on the top of the tank.

The standard fuel tank for the F-Series Cowl Models or P-Series vehicles (Fig. 8) is mounted on insulated brackets and straps located inside the frame side rail. The fuel tank filler pipe extends from the lower left rear side of the tank, through the vehicle body. The filler pipe is connected to the tank with a rubber hose and two clamps. A grommet insulates the pipe from the body. The tank is vented into the filler pipe by a connecting air relief line that leads from the top of the tank to the filler pipe. The fuel gauge sending unit and fuel outlet line are mounted on the top of the tank. A drain plug is located at the bottom side of the tank.

The fuel systems for all vehicle models not equipped with a fuel evaporative emission control system are vented through the filler pipe cap. Fuel systems equipped with a fuel evaporative emission control system are vented to a carbon canister and then to the engine air cleaner.

The various fuel lines, clips, looms, fittings and insulators are fabricated to suit the individual vehicle series or models and engine requirements. Each of the components are replaceable.

Nylon fuel lines are used on C, CT, W and WT Series trucks. Special connecting parts (Fig. 12) are used when installing or connecting these lines. Gasoline and Diesel trucks each require a different type of nylon fuel line as indicated in the Specifications.

The frame mounted auxiliary fuel tank (Figs. 2 and 9) is an optional 24 gallon capacity tank which is available for F-100-250 (4 x 2) and F-350 trucks. Models with the fuel evaporative system have a 20.2 gallon capacity. The option is available only with the standard aft-of-axle tank. The frame mounted fuel tank is also available on the Camper Special. It is mounted on insulated brackets and straps located inside the frame rail similar to the standard in-frame installation.

The Econoline fuel tank is located behind the rear axle (Fig. 3). The fuel tank filler pipe extends from the left lower rear corner of the tank through the rear quarter of the body. The filler pipe is connected to the tank with a rubber hose and two clamps. The fuel gauge sending unit and fuel outlet line are mounted on the front of the tank.

The tank is secured to the body in four places with two support straps.

The fuel tank and lines and the optional fuel tank plate (shield) for the Bronco models are shown in Fig. 4. The 14-gallon capacity fuel tank and optional plate is located between the frame side members at the rear of the vehicle. The fuel tank filler pipe extends from the fuel tank, through the left rear quarter panel. The tank contains a fuel gauge sending unit and an attached fuel tank vent line. Insulators are used at the fuel tank supports, clamps and retaining strap.

The optional auxiliary 12-gallon capacity polyurethane fuel tank and lines, and the optional fuel tank plate (shield) are shown in Figure 10. The auxiliary tank and plate are located between the frame members under the drivers seat. The fuel tank filler pipe extends from the fuel tank through the left side panel. The tank contains a fuel gauge sending unit which is connected to a switch on the instrument panel to provide metering of fuel quantity in either tank. A manual mixing valve is installed on the floor pan under the front seat to allow the driver to select fuel to be pumped from either or both tanks.

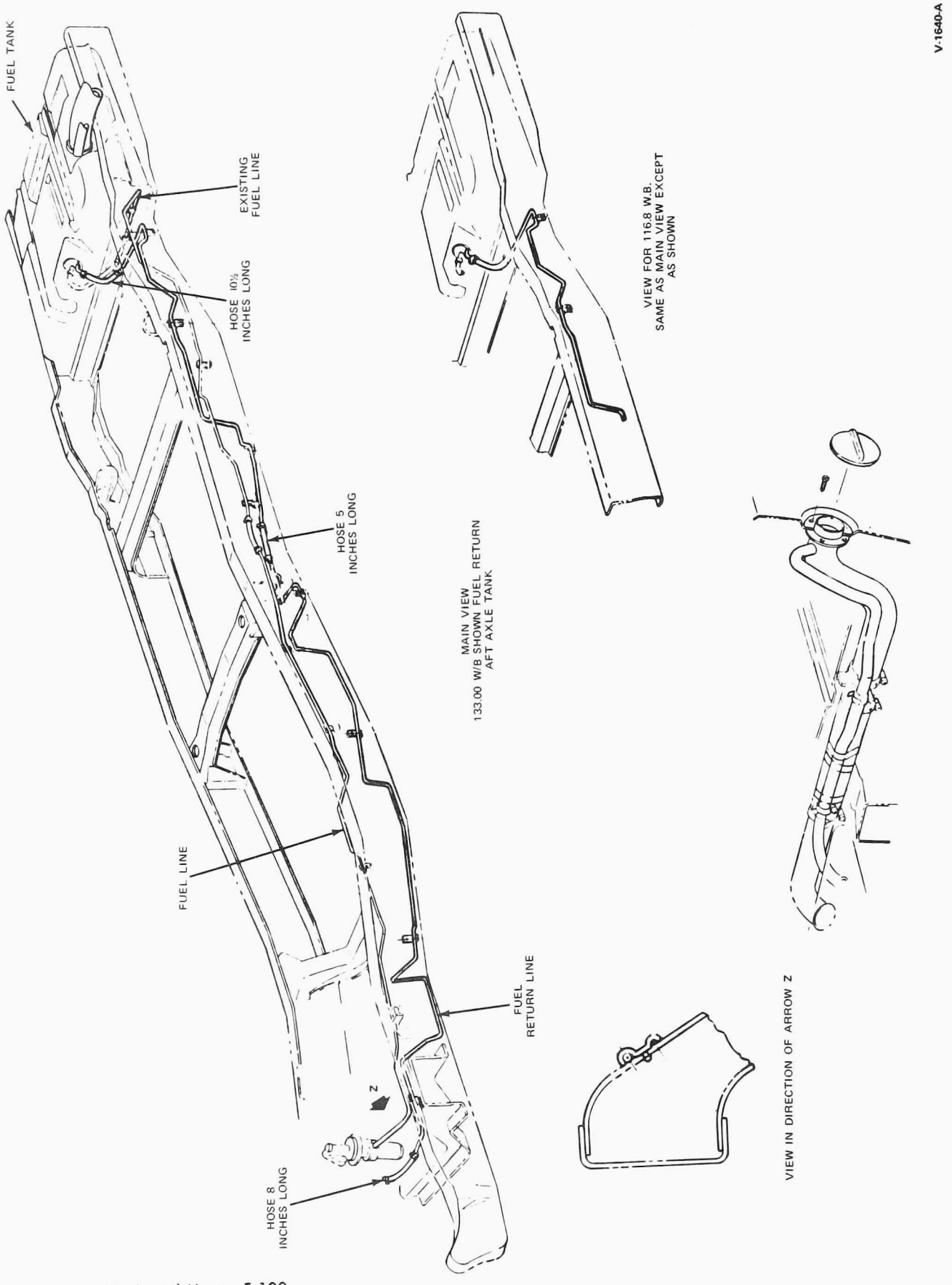

FIG. 1 Fuel Tank and Lines—F-100

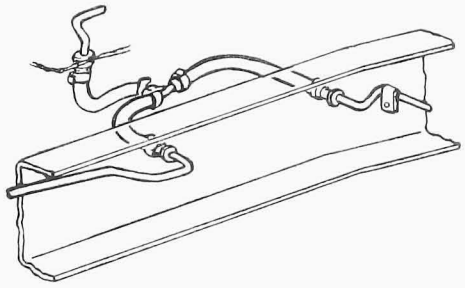

FOR 3 WAY CONNECTION OF COMBINATION
IN CAB & AUX. TANK

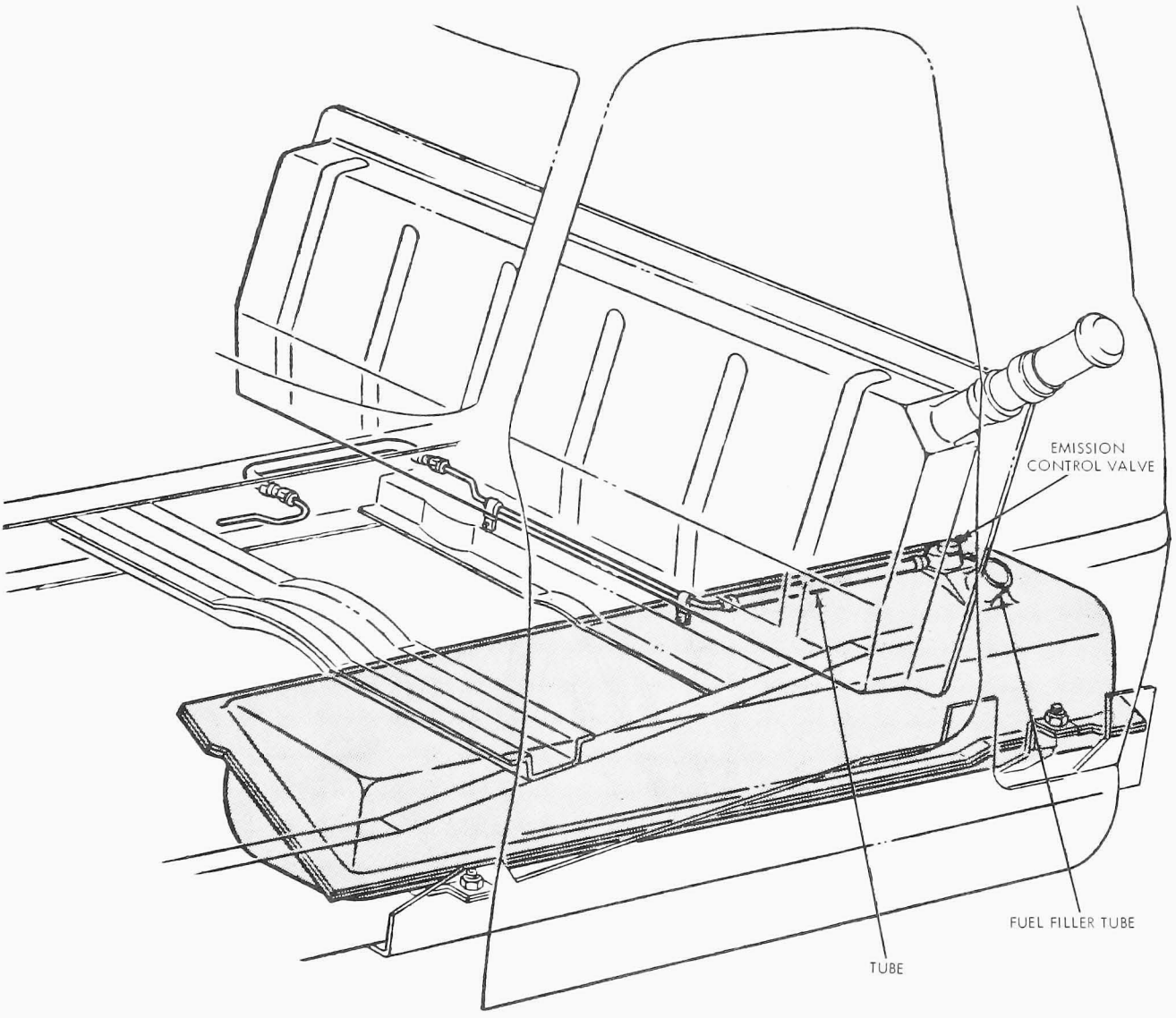

INSTALLATION - FUEL SYSTEM (AUX. TANKS)
SHOWING EVAPORATIVE SYSTEM FOR F-100

V1489-A

FIG. 2 Typical Under Cab Auxiliary Fuel Tank Installation—F-100

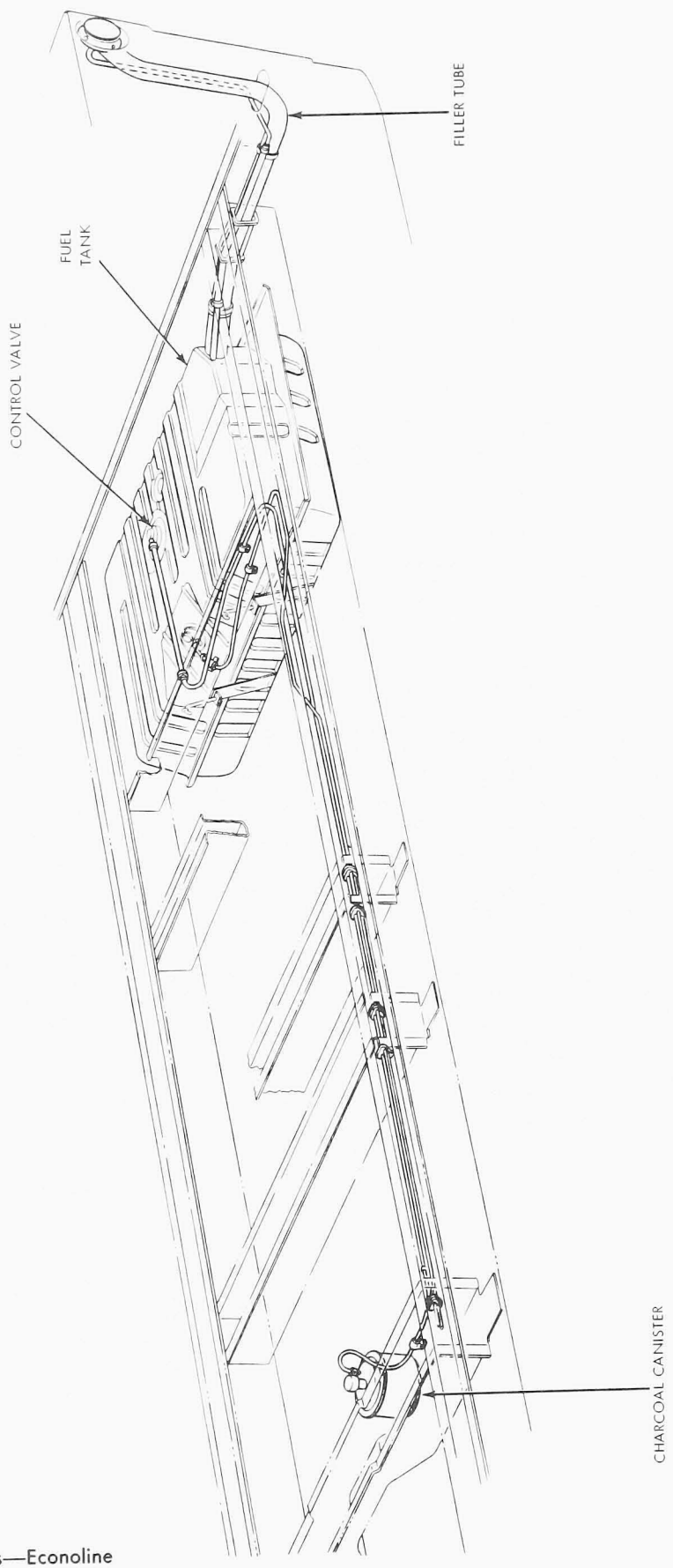

FIG. 3 Fuel Tank and Lines—Econoline

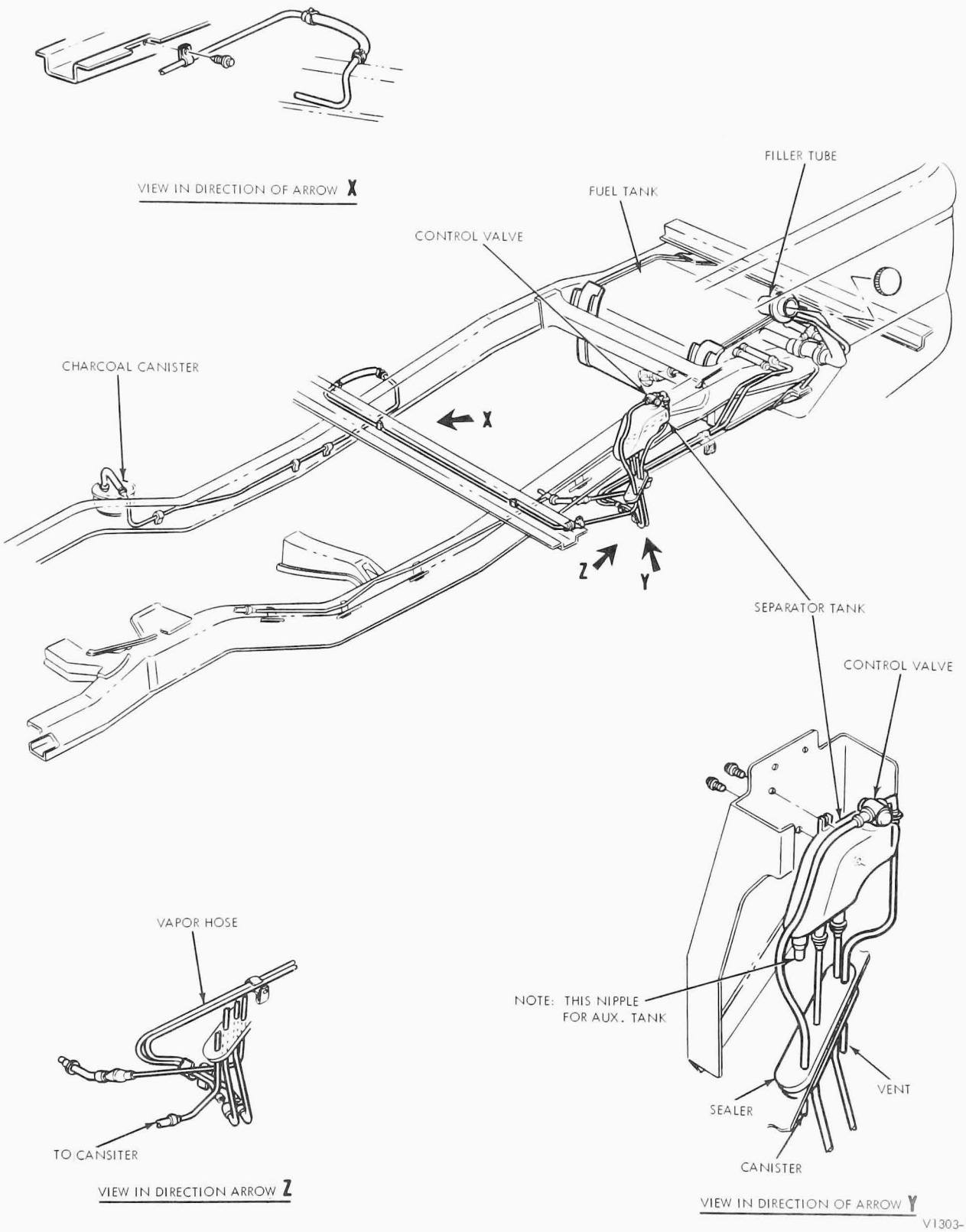

FIG. 4 Fuel Tank and Lines—Bronco

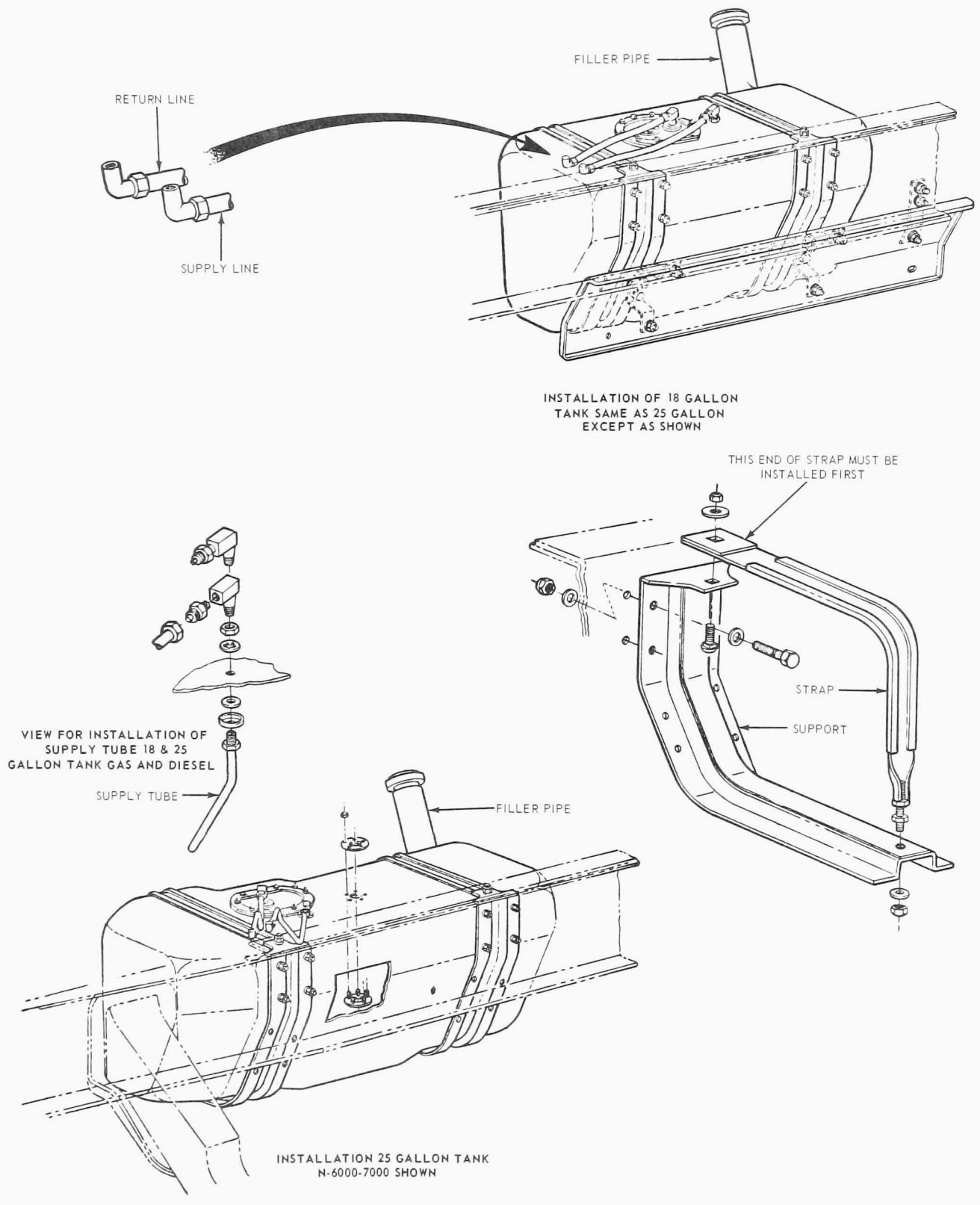

FIG. 5 Typical Fuel Tank Installation—LN 600-750, 6000-7000

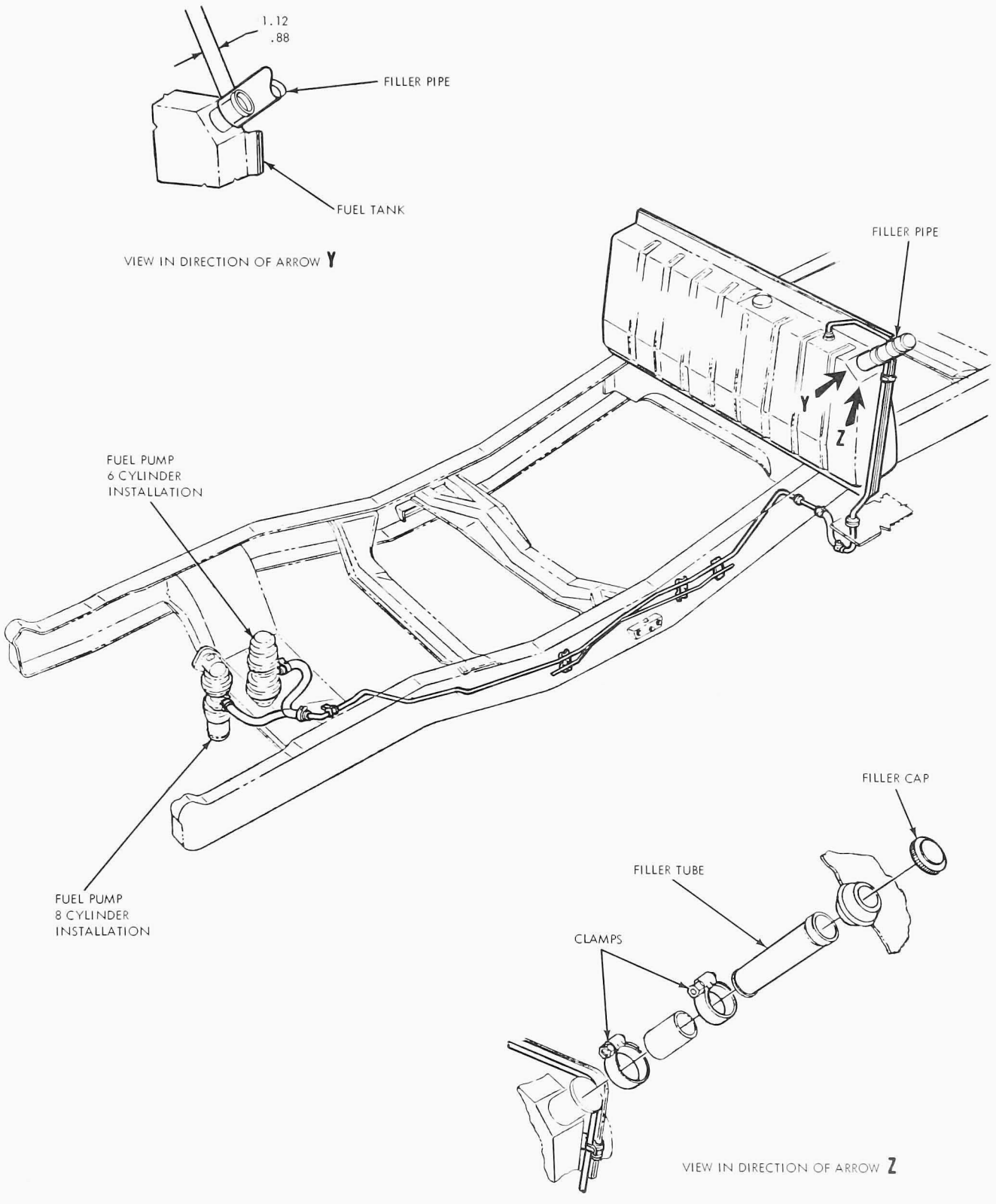

FIG. 6 Typical In-Cab Fuel Tank Installation—Except F-100

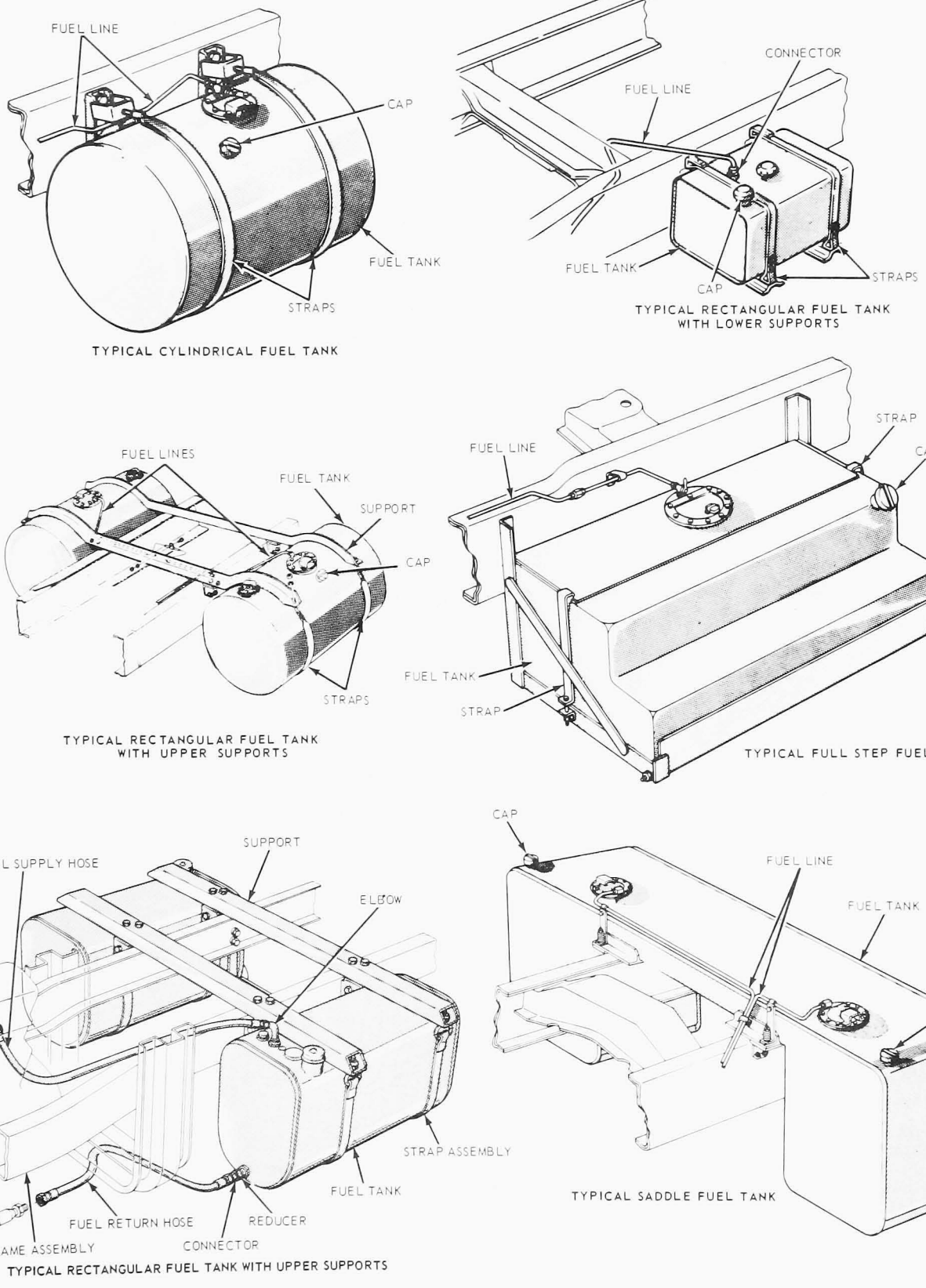

FIG. 7 Typical Outside-Frame Fuel Tank Installation

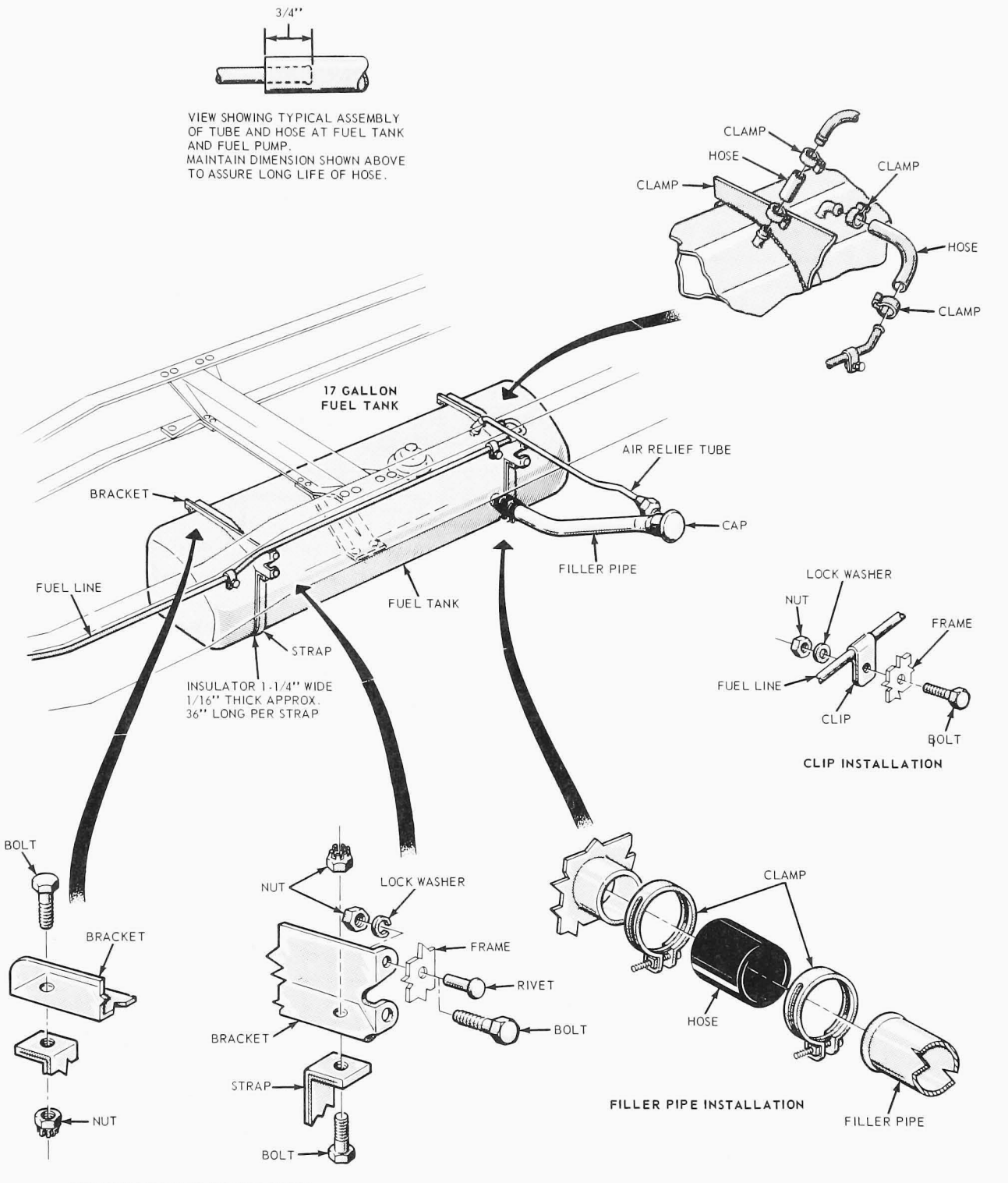

B2785-A

FIG. 8 Typical In-Frame Fuel Tank Installation

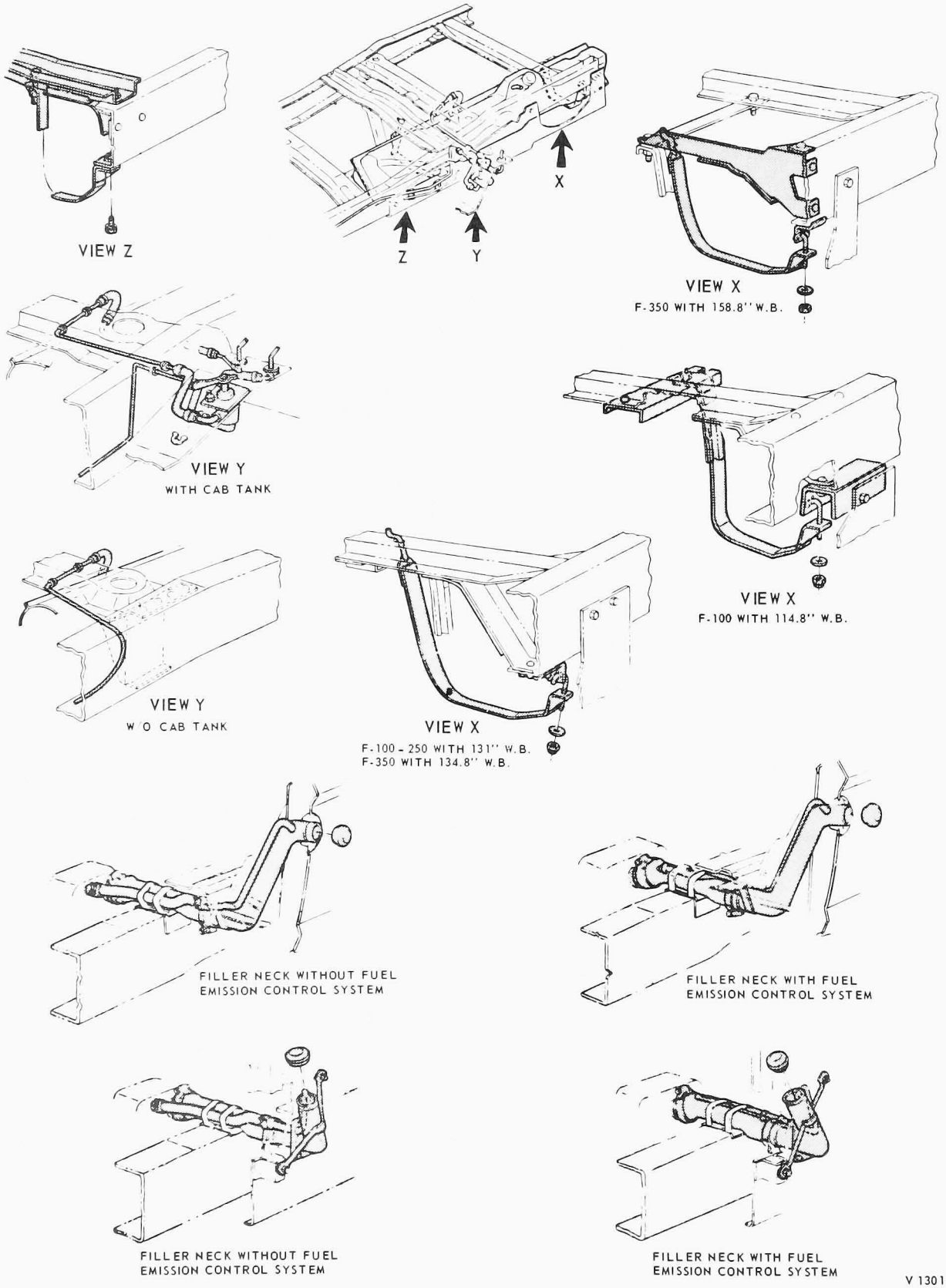

FIG. 9 Typical Under Cab Auxiliary Fuel Tank Installation—Except F-100

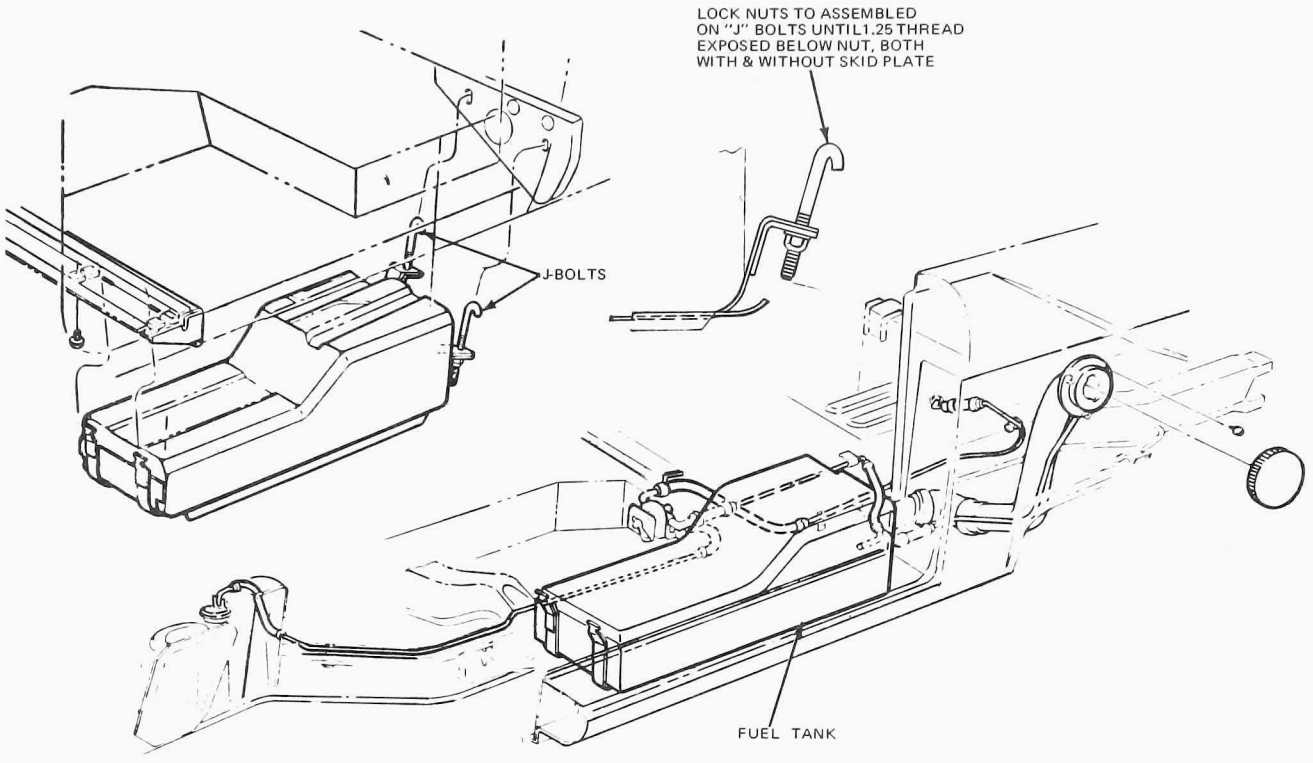

FIG. 10 Auxiliary Fuel Tank and Shield—Bronco

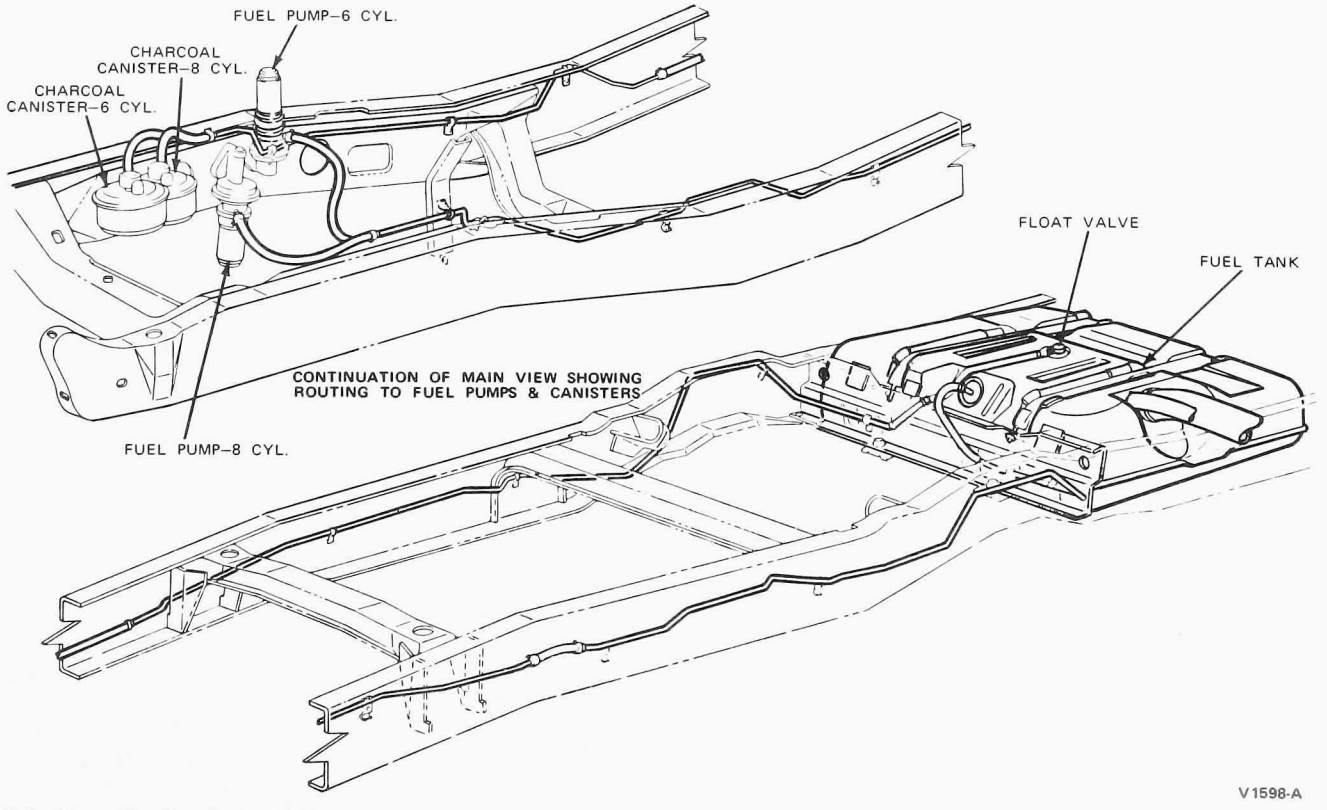

FIG. 11 Aft-of-Axle Fuel Tank

REMOVAL AND INSTALLATION

IN-CAB FUEL TANK

A typical fuel tank installation is shown in Figs. 1 and 6. Refer to the specifications for the capacities and usage.

Removal

1. Insert a siphon through the filler neck and drain the fuel into a suitable container.
2. Move the seat to the full forward position, and tilt the back of the seat forward.
3. Disconnect the fuel gauge sending unit wire and the fuel line. On a vehicle equipped with a fuel evaporative emission control system, disconnect the vapor vent chamber and vapor lines from the fuel tank (Fig. 1).
4. On a truck so equipped, disconnect the fuel return line.
5. Loosen the filler neck hose clamp at the tank end of the hose, and then pull the filler neck away from the tank.
6. Remove the fuel tank retaining bolts and nuts (Figs. 1 and 6). Lift the tank out of the cab. Replace all worn or damaged parts and insulators.
7. If the tank is to be replaced, remove the fuel gauge sending unit pressure relief tube (if so equipped) and gasket. Discard the gasket.

Installation

1. If the fuel tank has been replaced, install the fuel gauge sending unit pressure relief tube (if so equipped) and a new gasket. Glue new anti-rattle insulating material onto the new fuel tank. If required, glue three new rubber pads in place in the channel at the bottom of the tank. If required, glue new washers to the body at the mounting bolt holes.
2. Position the tank in the cab and install the nuts at the top and capscrews at the bottom of the tank.
3. Connect the fuel line, the fuel gauge sending unit wire and the filler neck hose. On a vehicle with a fuel evaporative emission control system, connect the fuel tank to vapor vent chamber and vapor tubes.
4. On a vehicle with a Diesel engine, connect the fuel return line.
5. Fill the fuel tank with fuel, and install the filler cap. Start the engine and check for leaks.
6. Stop the engine, tilt the back of the seat rearward and adjust the seat position.

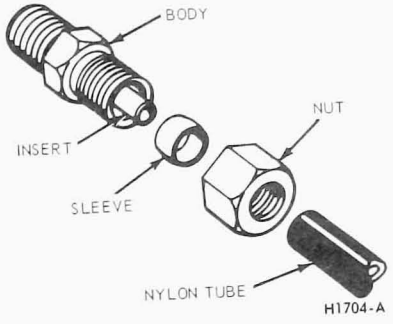

FIG. 12 Nylon Fuel Line Connection

OUTSIDE-FRAME FUEL TANKS

Typical fuel tank installations are shown in Fig. 7. Refer to the specifications for the capacities and usage.

Removal

1. Drain the fuel into a suitable container by either removing the drain plug (if so equipped) or by siphoning through the filler cap opening.
2. Disconnect the fuel line and the fuel gauge sending unit wire. Disconnect the electric fuel pump wires if so equipped.
3. On a vehicle so equipped, disconnect the fuel return line.
4. On a vehicle with dual fuel tanks, disconnect the fuel line connecting the tanks.
5. If the tank is equipped with a filler neck and connecting hose, loosen the hose retaining clamp at the tank, and pull the hose away from the tank.
6. Remove the fuel tank strap retaining bolts and remove the straps. Remove the tank. Replace all worn or damaged parts.
7. If the fuel tank is to be replaced, remove the fuel gauge sending unit and gasket from the tank. Remove the shut-off valve assembly if so equipped. Discard the gasket. Remove the electric fuel pump if so equipped.

Installation

1. If the fuel tank has been replaced, install the fuel gauge sending unit and a new gasket on the tank. Install the shut-off valve assembly, if so equipped. Install the electric fuel pump and a new gasket if so equipped. Position new insulating strips on the fuel tank. Install the drain plug (if it was removed) in the fuel tank.
2. Install the fuel tank on the mounting brackets.

If the tank is equipped with a filler neck and connecting hose, position the hose and clamp on the tank and tighten the hose.

3. Install the retaining straps, but do not tighten the mounting bolts. Align the tank. Make certain the insulators are properly centered under the straps and brackets. Tighten the retaining strap mounting bolts.
4. Connect the fuel line to the tank. Connect the fuel gauge sending unit wire. Connect the electric fuel pump wires if so equipped.
5. On a vehicle with dual fuel tanks, connect the fuel line connecting the tanks.
6. On a vehicle with a Diesel engine, connect the fuel return line.
7. Fill the tank with fuel and install the filler cap. Start the engine and check for leaks.

SADDLE TANK

A typical fuel tank installation is shown in Fig. 7. Refer to the specifications for the capacities and usage.

Removal

1. Drain both sides of the tank into a suitable container.
2. Disconnect the sending wires from the fuel gauges and the fuel inlet lines. Disconnect the electric fuel pump wires if so equipped. Position the lines and wires out of the way.
3. Remove the nuts and bolts retaining the air line and hose bracket to the forward edge of the tank.
4. Remove the bolt, nut, flat washer and spring from each fuel tank mounting bracket.
5. Hook a lifting chain to the 4 corners of the fuel tank (near the mounting brackets) and remove the tank with a hoist.

Installation

1. If a replacement tank is being installed, remove the fuel gauge sending units from the old tank and install them, with new gaskets, in the replacement tank. Remove the electric fuel pumps, if so equipped, from the old tank and install them, with new gaskets, in the replacement tank.

2. Inspect the insulator pads and replace them if they are damaged.
3. Using a hoist, position the tank on the vehicle.
4. Remove the hoist and lifting chain.
5. Install the retaining bolt, washer, spring and nut on each mounting bracket.
6. Install the air line and hose support bracket retaining bolts, washers and nuts.
7. Connect the sending wires to the fuel gauges and the fuel lines to the connectors. Connect the electric fuel pump wires if so equipped.
8. Replace the fuel.
9. Start the engine and check for leaks.

IN-FRAME FUEL TANK

A typical fuel tank installation is shown in Figs. 1 and 8. Refer to the specifications for the capacities and usage.

Removal

1. Drain the fuel into a suitable container by either removing the drain plug (if so equipped) or by siphoning through the fuller cap opening. Also, on F-100, 250 and 350 models, remove the spare tire if located under the fuel tank.
2. Disconnect the fuel gauge sending unit wire and the fuel outlet line.
3. On a vehicle with a Diesel engine, disconnect the fuel return line.
4. Disconnect the air relief tube from the filler neck and the fuel tank.
5. Loosen the filler neck hose clamp at the fuel tank and pull the filler neck away from the tank.
6. Remove the retaining strap mounting bolts and nuts, and lower the tank to the floor. Replace all worn or damaged parts.
7. If the tank is to be replaced, remove the fuel gauge sending unit and gasket from the tank. Discard the gasket.

Installation

1. If the fuel tank has been replaced, install the fuel gauge sending unit and a new gasket on the tank. Position new insulating strips on the fuel tank. Install the drain plug in the fuel tank (if required).
2. Position the straps around the tank. Install the tank and straps on the support bracket. Align the tank. **Make certain the insulators are centered properly under the straps and mounting brackets.** Tighten the strap retaining bolts.
3. Position the filler neck clamp and hose on the fuel tank and tighten the clamp.
4. Connect the air relief tube to the filler neck and tank. Connect the fuel line to the tank. Connect the fuel gauge sending unit wire.
5. On a vehicle with a Diesel engine, connect the fuel return line.
6. Fill the tank with fuel and install the filler cap. If the spare was removed, install it. Start the engine and check for leaks.

UNDER-CAB AUXILIARY FUEL TANK

A typical fuel tank installation is shown in Figs. 2 and 9. Refer to the specifications for the capacities and usage.

Removal

1. Drain the fuel into a suitable container by inserting a syphon through the filler neck.
2. Remove the clamps and disconnect the hoses attached to the fuel tank. On a vehicle equipped with a fuel evaporative emission control system, disconnect the vapor lines from the emission control valve.
3. Remove the nuts and bolts from the retaining straps, and lower tank to floor. Replace any worn or damaged parts.

Installation

1. Position retaining straps around fuel tank and attach bolts and nuts.
2. Connect the hoses to the tank and tighten the clamps. On a vehicle equipped with a fuel evaporative emission control system connect the vapor lines to the emission control valve located in the top of the tank.
3. Fill tank with fuel and check for leaks.

ECONOLINE FUEL TANK

The Econoline fuel tank installation is shown in Fig. 3.

Removal

1. Raise the rear of the vehicle.
2. **To avoid electrical sparking at the tank, disconnect the ground cable on the vehicle battery.** Then disconnect the fuel gauge sending unit wire at the fuel tank.
3. Remove the fuel tank drain plug and drain the fuel into a suitable container.
4. Loosen the hose clamps, slide the clamps forward and disconnect the fuel line at the fuel gauge sending unit. Disconnect the fuel tank vapor lines by removing the clamps at the emission control valve.
5. If the fuel gauge sending unit is to be removed, turn the unit retaining ring counterclockwise and remove the sending unit, retaining ring, and gasket.
6. Loosen the clamp on the fuel filter pipe hose at the tank, and disconnect the hose at the tank and disconnect the hose from the tank.
7. Remove the strap retaining nut at each tank mounting strap, swing the strap down, and lower the tank enough to gain access to the tank vent hose.
8. Disconnect the fuel tank vent hose at the top of the tank.
9. Lower the fuel tank, and remove it from under the vehicle.

Installation

Make sure all mating surfaces are clean.

1. Position the forward edge of the tank to the frame crossmember, and connect the vent hose to the top of the tank.
2. Position the tank and mounting straps, and install the retaining nuts and flat washers.
3. Connect the filler pipe-to-tank hose at the tank and install the hose clamp.
4. If the fuel gauge sending unit was removed, make sure all the old gasket material has been removed from the unit mounting surface on the fuel tank. Using a new gasket, position the fuel gauge sending unit to the fuel tank and secure with the retaining ring.
5. Connect the fuel gauge sending unit wire to the sending unit.
6. Connect the fuel line at the fuel gauge sending unit and tighten the hose clamps securely. Install the drain plug.

Connect the fuel tank to vapor lines at the emission control valve located on top of the tank.

7. Connect the vehicle battery ground cable removed in Step 2 of the removal procedure (above).
8. Fill the tank and check all connections for leaks.
9. Lower the vehicle.

BRONCO FUEL TANK

Removal

Use the following procedure to remove either the main or auxiliary fuel tanks.

1. Insert a siphon through the filler neck and drain the fuel into a suitable container.
2. Raise the rear of the vehicle. (For removal of the auxiliary tank, raise the left side of the vehicle.)
3. To avoid electrical sparking at **the tank, disconnect the ground cable on the vehicle battery.** Then disconnect the fuel gauge sending unit wire at the fuel tank.
4. Loosen the clamp on the fuel filler pipe hose at the filler pipe and disconnect the hose from the pipe.

5. Loosen the hose clamps, slide the clamps forward and disconnect the fuel line at the fuel gauge sending unit.
6. If the fuel gauge sending unit is to be removed, turn the unit retaining ring, and gasket.
7. Remove the strap attaching nut at each tank mounting strap, swing the strap down, and lower the tank enough to gain access to the tank vent hose.
8. Disconnect the fuel tank vent hose at the top of the tank.

Disconnect the fuel tank to separator tank lines at the fuel tank.

9. Lower the fuel tank and remove it from under the vehicle.

Installation

Use the following procedure to install either the main or auxiliary fuel tank. **Make sure all mating surfaces are clean.**

1. Position the forward edge of the tank to the frame crossmember, and connect the vent hose to the top of the tank.

Connect the fuel tank to separator tank lines at the fuel tank.

2. Position the tank and mounting straps, and install the attaching nuts and flat washers.
3. If the fuel gauge sending unit was removed, make sure all the old gasket material has been removed from the unit mounting surface on the fuel tank. Using a new gasket, position the fuel gauge sending unit to the fuel tank and secure with the retaining ring.
4. Connect the fuel line at the fuel gauge sending unit and tighten the hose clamps securely. Install the drain plug, if so equipped.
5. Connect the fuel gauge sending unit wire to the sending unit.
6. Connect the filler pipe-to-tank hose at the filler pipe and install the hose clamp.
7. Connect the vehicle battery ground cable removed in Step 2 of the removal procedure (above).
8. Fill the tank and check all connections for leaks.
9. Lower the vehicle.

FILLER PIPE-IN CAB FUEL TANKS

Removal

1. Insert a siphon through the filler pipe and drain the fuel tank to a level (approximately 3/4 full) below the fuel tank filler connection (Figs. 1 and 6).
2. Move the seat to the full forward position, and tilt the back of the seat forward. On a Diesel engine equipped vehicle, loosen the clamp and disconnect the fuel return hose from the filler pipe hose.
3. Loosen the filler pipe hose clamps. Pull the hose and filler pipe away from the tank. Remove the clamps, hose, grommet and filler pipe from the truck.
4. Replace all worn or damaged parts.

Installation

1. Position the hose and clamps on the filler pipe (Figs. 1 and 6). Position the grommet on the filler pipe. Position the filler pipe assembly in the cab and connect the hose to the tank filler opening.
2. Adjust the hose to obtain a snug filler pipe installation and tighten the hose clamps. **Make certain the clamps are forward of the flange on the filler pipe and tank, to insure a leak proof connection.**

On a Diesel engine equipped vehicle, connect the fuel return line to the filler pipe hose and tighten the retaining clamp.

3. Fill the tank with fuel to a level above the hose. Install the filler cap, and check for leaks.
4. Tilt the back of the seat rearward and adjust the seat position.

FILLER PIPE-IN FRAME FUEL TANKS

Removal

1. Remove the filler pipe cap. Remove the drain plug and completely drain the fuel tank.
2. Disconnect the air tube at the filler neck (Fig. 8). Loosen the filler pipe hose clamps. Pull the filler pipe assembly away from the tank and remove it from the vehicle.
3. Remove the hose and clamps. Replace all damaged or worn parts.

Installation

1. Position the hose and clamps on the filler pipe, and position the filler pipe assembly on the tank filler opening (Fig. 8). Align the filler pipe with the air tube connection.
2. Adjust the hose to obtain a snug filler pipe installation and tighten the hose clamps. **Make certain the clamps are forward of the flange on the filler neck and the tank opening to ensure a leakproof connection.** Connect the air tube to the filler pipe. Install the drain plug.
3. Fill the tank with fuel. Install the filler cap, and check for leaks.

FILLER PIPE—ECONOLINE

Removal

1. Drain tank to a level below the filler pipe. Raise the rear of the truck and loosen the lower clamp on filler pipe to tank hose. On a vehicle equipped with a fuel evaporative emission control system, loosen the filler tube vent hose clamp at the tank.
2. Open the filler pipe access door in the quarter panel and remove the screws that retain the filler pipe to the quarter panel.
3. Remove the filler pipe and hose from the quarter panel and fuel tank.
4. Loosen the hose clamp at the filler pipe and remove the hose from the filler pipe.

Remove the filler tube vent hose from the filler pipe, if so equipped.

Installation

1. Install the hose on the replacement filler pipe and secure with the hose clamp.

Install the filler tube vent hose on the filler pipe, if so equipped, and tighten the clamp.

2. Install the filler pipe and hose, and secure the filler pipe to the quarter panel with the retaining screw.
3. Position the lower hose clamp on the hose, connect the hose to the fuel tank inlet, and secure with the hose clamp.

On a vehicle equipped with a fuel evaporative emission control system, connect the filler tube vent hose to the fuel tank and tighten the clamp.

FILLER PIPE—BRONCO

Removal

Use the following procedure to remove either the main or the auxiliary fuel tank filler pipe.

1. Drain the tank to a level below the filler pipe. Raise the vehicle and loosen the lower clamp on the filler pipe to tank hose. Loosen the clamp on the filler vent tube hose at the tube.
2. Remove the screws that retain the filler pipe to the vehicle panel.
3. Remove the filler pipe and hose from the fuel tank. Slide the pipe out of the panel opening.
4. Loosen the hose clamp at the filler pipe and remove the hose from the filler pipe.

Installation

Use the following procedure to install either the main or the auxiliary fuel tank filler pipe.

1. Install the hose on the replacement filler pipe and secure with the hose clamp. Make sure all surfaces are clean.
2. Slide the filler pipe and hose into the hole in the panel. Slip the lower hose clamp on the hose and align the hose with the fuel tank filler pipe. Push

the hose onto the filler pipe.
3. Secure the filler pipe to the panel with the retaining screws.
4. Position the lower hose clamp over the fuel tank filler pipe stub, and tighten the hose clamp securely.

Connect the filler vent tube hose at the vent tube and tighten the clamp.
5. Fill the tank above the hose connections and check for leaks.
6. Lower the vehicle.

FUEL LINES—METAL

The various fuel lines are not serviced as assemblies. They must be cut, squared, and formed out of fuel system tubing and hose material available at dealerships.

A damaged section of tubing longer than 12 inches can be cut out of the existing line and replaced by service hose and two retaining clamps. All replacement hoses must be cut to a length that will ensure proper clamp retention beyond the ends of the connecting tubing.

Removal

1. Disconnect the fuel line(s) at both ends and remove the unit(s) from the holding clip(s), and the truck.
2. Slide the loom(s) (if used) off the line(s). Replace all worn or damaged parts.

Installation

1. Use the same diameter tubing as the original installation(s), and shape the new line(s) to the contour of the original line(s). Avoid sharp bends.
2. Cut the new line(s) to approximately the same length as the original line(s). Allow an additional length for the flaring operation.
3. Square off the ends with a file, and ream the sharp edges with the reamer blade on the tube cutter.
4. Position the new loom(s) (if used) on the new line(s). Place new connections on the line, if required, and flare the ends of the line(s) with a flaring tool. **When attaching new line to fuel pump or any other fitting, be sure to use a double lap flare in the line.** Be sure metal chips are removed from inside the tubing.
5. Install the connecting hoses and clamps (if required) on the fuel line(s). Position the line(s) in the clip(s) on the vehicle, and tighten the connection(s). Tighten the connecting hose clamps, if so equipped.
6. Check the connections for leaks.

FUEL LINES—NYLON

Inspect lines for kinking which might reduce fuel flow. Kinked lines should be replaced. Refer to the Specifications for type of nylon tubing used on gasoline or Diesel powered trucks.

Minimum bend radii for different sizes of tubing are shown in the specifications.

Removal and Installation

These lines are coupled to metal fittings in the same general manner as metal-to-metal connections, except that a plastic insert (Fig.9) must be used to prevent collapse of the tube. In addition, the sleeve shown in Fig. 11, which is similar to the ferrule used on metal tubes, is also made of nylon to prevent cutting the plastic tube. When making a new connection or installing a line, be sure that the tubing is cut square. Then the tube and insert must be bottomed in the body and held in place while tightening the tube nut to specifications.

SPECIFICATIONS

BRONCO

Tank Type	Approximate U.S. Measure (Gallons)	Approximate Imperial Measure (Gallons)
Standard	12-1/4	10-1/4
Auxiliary	7-1/2	6-1/4

ECONOLINE

Vehicle	U.S. Measure (Gallons)	Imperial Measure (Gallons)
All Except E-300 Vans	20-1/4	16-3/4
E-300 Vans	23	19

F100-350

Tank Type	Vehicle	Approximate Capacities	
		U.S. Gallons	Imperial Gallons
Standard	F-100 (4x2 – 4x4)	19.2	15.9
	F-250 (4x2)	20.5	17.1
	F-250 (4x2) ①	19.2	15.9
	F-250 (4x4)	19.3	16.0
	F-250 (4x4) ①	17.5	14.6
	F-350 (Stake, Chassis-Cab, Platform)	19.3	16.0
	F-350 (Stake, Chassis-Cab, Platform) ①	17.5	14.6
	F-350 (Cowl)	22.5	18.7
	F-350 (Cowl) ①	20.2	16.8
	F-350 (Super Camper Special)	20.6	17.2
	F-350 (Super Camper Special) ①	19.3	16.0
	P-350 (104" Wheelbase)	17.0	14.0
	P-350 (122" Wheelbase)	30.0	25.0
	P-350 (122" Wheelbase) ①	23.5	19.6
	P-400/500 (137" & 154" ② Wheelbase)	30.0	25.0
	P-400/500 (137" & 154" ② Wheelbase) ①	23.5	19.6
Optional (Frame Mounted)	F-100 (4x2)	20.2	16.8
	F-250 (4x2) & F-350 (Stake, Chassis-Cab, Platform)	22.5	18.7
	F-250 (4x2) & F-350 (Stake, Chassis-Cab, Platform) ①	20.2	16.8

① Standard in California Only (Optional in 49 States) ② 154" Wheelbase P-500 Only

MEDIUM AND HEAVY TRUCK FUEL TANKS

APPROXIMATE APACITY GALS		TYPE – LOCATION	F-500-600	F-6000	F-700-750	F-7000	C-500-550-600	C-6000-7000	C-700-750-800	C-8000	C-900	CT-800-900	B-500-600	B-6000-7000	B-700-750	W-WT-9000
U S	IMP															
19 1/2	16 1/2	Inside Cab	S	S	S	S										
18	15	w/Mech. Fuel Pump (Rect) Outside Frame LH	S		S		S		S							
18	15	w/Elect, Fuel Pump (Rect) Outside Frame LH			0				0		S					
30	25	Cylindrical Steel Outside Frame LH										S				
30	25	Rect With Mech Fuel Pump Outside Frame RH											S		S	
30	25	Rect w/Mech Fuel Pump Outside Frame LH	0		0		0		0							
30	25	Rect w/Electric Fuel Pump Outside Frame LH			0				0							
30	25	Rectangular Outside Frame RH		0		0		S		0				S		
50	41 1/2	Cylindrical Steel & Alum Steel LH Only Alum								S 0						
50	41 1/2	Cylindrical Steel RH - LH						0		S						
50	41 1/2	Cylindrical Steel Single or Dual Indiv Mtd		0		0										
50	41 1/2	Cylindrical Steel Dual Curved Angle Mtd			0	0			0		0					
50	41 1/2	Cylindrical Steel Single or Dual Indiv Mtd			0				0		0	0				
50	41 1/2	Cylindrical Steel & Alum Steel Single or Dual Indiv Mtd Alum														S 0
50	41 1/2	Cylindrical Steel & Alum Steel LH Alum														0 0
60	50	Cylindrical Steel & Alum Steel LH Only Alum								0 0						
60	50	Cylindrical Steel RH - LH						0		0						
60	50	Cylindrical Steel Single or Dual Indiv Mtd			0				0		0	0				
60	50	Cylindrical Steel Dual Curved Angle Mtd			0				0		0					
60	50	Cylindrical Steel Single or Dual Indiv Mtd		0		0										
60	50	Cylindrical Steel & Alum Steel Single or Dual Indiv Mtd Alum														0 0
60	50	Cylindrical Steel & Alum Steel LH Alum														0 0
100	83 1/2	Rectangular Steel Duals Left and Right Side														0
125	104	Saddle - Steel			0				0		0	0				

CV 1054-B

MEDIUM AND HEAVY TRUCK FUEL TANK (Cont'd.)

APPROXIMATE CAPACITY GALS		TYPE - LOCATION	L-800-900	L-8000-9000	LT-800	LT-8000-9000	LT-900	LN-500-600-700-750	LN-6000-7000	LN-800-900	LN-8000-9000	LNT-800	LNT-8000 9000	LNT-900
U S	IMP													
18	15	Right Hand						S	S					
25	20	Mech & Electric Fuel Pump-RH Under Cab	S		S		S	0	0	S		S		S
50	41 1/2	Rectangular Step LH-Duals				0			0				0	
50	41 1/2	Rectangular Step RH				0	0	0	0				0	0
50	41 1/2	Rectangular Step Steel LH-Duals					0	0						0
50	41 1/2	Cylindercal Step Steel RH	0	S	0	S	0			0	S	0	S	0
50	41 1/2	Cylindrical Step Steel LH-Duals	0	0	0	0	0			0	0	0	0	0
75	60 1/2	Rectangular End Step Steel LH-Duals				0							0	
75	60 1/2	Rectangular End Step RH Steel			0	0	0						0	0
75	60 1/2	Rectangular Step Steel LH-Duals			0		0							0
75	60 1/2	Cylindrical Step Alumin um LH, RH, or Duals		0		0					0		0	
75	60 1/2	Cylindrical Step-Steel LH, RH, or Duals		0		0					0		0	
100	83 1/2	Cylindrical Step Steel Under Cab RH		0		0					0		0	

CV 1055-B

NYLON FUEL LINE

Gasoline .....Ford Specification EST-M40234-A	Diesel .....SAE Specification J844 Type 3B	
Tube O D	**Minimum Bend Radius**	**Tube Nut Torque**
1/4	1 inch	7-10 ft-lbs
3/8	1 1/4 inch	12-17 ft-lbs
1/2	2 inch	12-17 ft-lbs

CV1056-A

PART 24-51 Fuel Filters

Applies To All Gasoline Engine Trucks

COMPONENT INDEX	Page	COMPONENT INDEX	Page
FUEL FILTERS		In-Line Filter with Electric Pump	
Description	51-01	500-800 Series	51-02
Fuel Pump with Integral Filter	51-02	In-Line with Electric Pump	
In-Line Filter – Bronco and Econoline	51-02	850-900 Series	51-02

DESCRIPTION

The fuel filters for mechanical fuel pumps are integrally mounted on the fuel pump except for the Bronco and Econoline and vehicles with electrical fuel pump systems.

Replace the in-line fuel filter assembly or the replaceable filter element (Figs. 1, 2 and 3) if either type becomes clogged, and also at the recommended maintenance mileage interval.

The integral fuel filter elements are not interchangeable between 6 and 8 cylinder fuel pumps. Refer to specifications for correct part number and follow instructions that come with element for proper installation.

Refer to the 1973 Truck Maintenance and Lubrication Manual for the recommended maintenance mileage interval.

On 100-800 Series vehicles, replace the filter element at the recommended maintenance mileage interval or whenever it becomes clogged.

On 900 Series vehicles, the drain plug at the bottom of the fuel filter bowl should be removed to drain the bowl, and filter element and gaskets should be replaced at the recommended maintenance mileage interval.

The electric fuel pump is replaced as an assembly and should not be disassembled.

Refer to Wiring and Vacuum Diagram Manual Form 7795P-73 for schematics and locations of wiring harnesses and related parts.

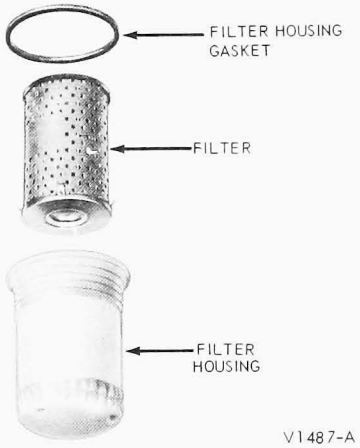

FIG. 1 Typical Fuel Filter with Replaceable Filter Element

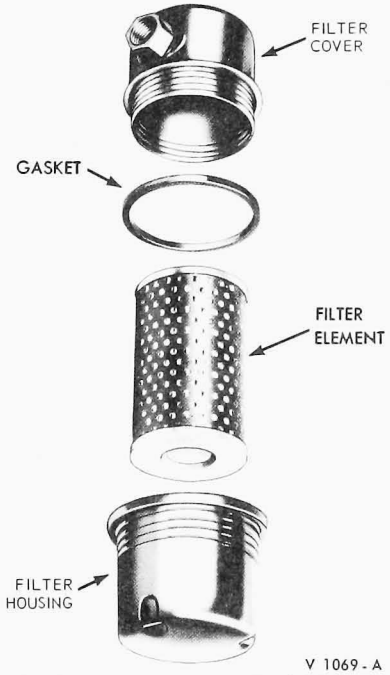

FIG. 2 Typical In-Line Fuel Filter Used with Electric Fuel Pump—500-800 Series

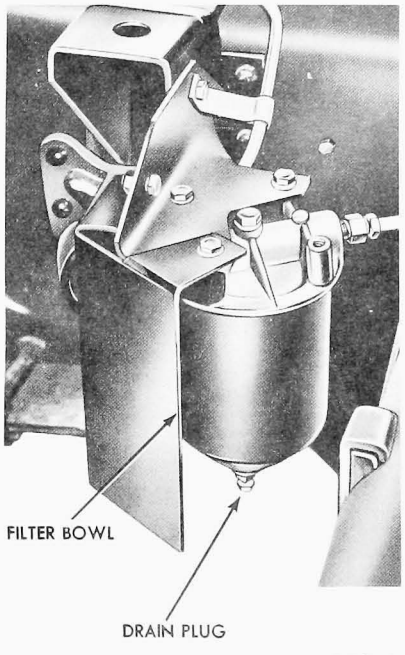

FIG. 3 Fuel Filter—Electric Fuel Pump—900 Series

REMOVAL AND INSTALLATION

IN-LINE FUEL FILTER—BRONCO AND ECONOLINE

The in-line fuel filter is of one-piece construction and cannot be cleaned. Replace the filter if it becomes clogged or restricted.

1. Remove the air cleaner (Parts 24-40 or 24-41).
2. Loosen the retaining clamp securing the fuel inlet hose to the fuel filter.
3. Unscrew the fuel filter from the carburetor. Disconnect the fuel filter from the hose and discard the retaining clamp.
4. Install a new clamp on the inlet hose and connect the hose to the filter. Screw the filter into the carburetor inlet port. Tighten the filter.
5. Position the fuel line hose clamp and crimp the clamp securely.
6. Start the engine and check for fuel leaks.
7. Install the air cleaner.

FUEL PUMP WITH INTEGRAL FUEL FILTER

1. Unscrew the filter housing from the fuel pump, and remove the filter element and gasket. Discard the element and gasket. Clean the filter housing in cleaning solvent.
2. Place a new filter element over the spout in the fuel pump valve housing cover. **Be sure to use the proper type element for the installation.** Coat a new gasket with light engine oil and position the gasket on the filter housing (Fig. 1). Screw the filter housing onto the fuel pump. Hand tighten the filter housing until the gasket contacts the pump, and then advance it 1/8 turn.
3. Start the engine and check for leaks.

IN-LINE FUEL FILTER—900 SERIES—WITH ELECTRIC FUEL PUMP

1. Unscrew the lower section from the upper section and remove the filter element and gasket (Fig. 2). Discard the element and gasket.
2. Clean the lower section in cleaning solvent. Clean the upper section with a cloth.
3. Coat a new gasket with light engine oil and position the gasket on the lower section.
4. Place a new filter element in the lower section.
5. Screw the lower section onto the upper section until the gasket contacts the upper section. Turn the lower section an additional 1/8 turn.

IN-LINE FUEL FILTER—850-900 SERIES—WITH ELECTRIC FUEL PUMP

1. Remove the drain plug from the filter bowl, and drain the fuel from the bowl into a suitable container (Fig. 3).
2. Remove the center bolt and washer, then remove the filter bowl and mounting gasket. Remove the filter element, gaskets, spring and spring seat.
3. Discard the filter element and gaskets. Clean the filter lower section in cleaning solvent. Clean the upper section with a cloth.
4. Position the spring seat, spring and new lower gaskets in the filter bowl as shown in Fig. 4. Install a new element in the filter bowl. Position the filter and new upper gaskets against the upper body. Install and tighten the center bolt and washer to specifications.

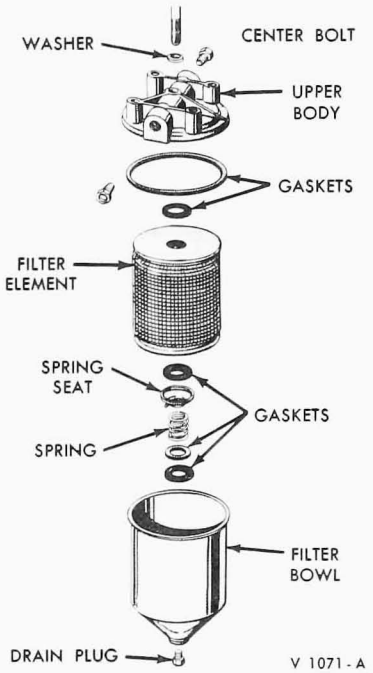

FIG. 4 Fuel Filter Disassembled—900 Series

PART 24-60 Throttle Linkage

COMPONENT INDEX Applies to Models as Indicated	ENGINE APPLICATION											
	All	240	300	302	330	360	361	390	391	401	477	534
THROTTLE LINKAGE Adjustment												
Bronco				60-02								
B-Series		60-02	60-02									
C-Series					60-03		60-03		60-03	60-03	60-03	60-03
Cowl Models												
CT-Series					60-03		60-03		60-03	60-03	60-03	60-03
Econoline		60-01		60-02								
F-100-350 Series		60-02	60-02									
F-500-750 Series					60-03	60-03	60-03		60-03	60-03	60-03	60-03
L-Series					60-03		60-03		60-03	60-03	60-03	60-03
LN-Series					60-03		60-03		60-03	60-03	60-03	60-03
LNT-Series					60-03		60-03		60-03	60-03	60-03	60-03
LT-Series					60-03		60-03		60-03	60-03	60-03	60-03
LTS-Series					60-03		60-03		60-03	60-03	60-03	60-03
P-Series		60-02	60-02									

Numbers indicate pages on which instructions appear.

ADJUSTMENTS

200 SIX ENGINE—BRONCO

MANUAL TRANSMISSION

1. Disconnect the pin from the stabilizer rod and pull the rod from the bracket on the dash (Fig. 1).
2. Disconnect the rod from the bellcrank.
3. Insert a 3/16 diameter inch pin through the three holes in the bellcrank and bracket.
4. Thread the stabilizer rod into the bellcrank until the rod will enter the bracket on the dash.
5. Connect the stabilizer to the bracket using the pin, the remove the gauge pin.
6. Bring the throttle arm to the wide open position by pushing rearward on the bellcrank.
7. Adjust the length of the rod assembly so its forward end surface just touches the side of the bellcrank ball, then connect the rod.

240 SIX ENGINE—ECONOLINE

MANUAL TRANSMISSION

1. Remove four engine cover to floor bolts and unlatch the cover at either side. Remove the cover.
   Remove the air cleaner assembly.
2. Hold the accelerator pedal downward at the wide-open throttle position and check the position of carburetor throttle plate.

3. If the throttle plate is not wide-open with the accelerator pedal fully depressed, loosen the throttle cable retaining clip at the accelerator bracket (Fig. 3). With the accelerator pedal fully depressed, adjust the cable housing inward or outward until the throttle plate is in the wide-open position. Tighten the throttle cable bracket retaining clip.
4. **Check the accelerator linkage for proper operation.** Install the air cleaner assembly. Install the engine compartment cover.

AUTOMATIC TRANSMISSION

Instructions for adjusting the Automatic Transmission throttle linkage are given in Fig. 3.

302 V-8 ENGINE—BRONCO

MANUAL TRANSMISSION

The throttle (accelerator) linkage and hand operated throttle control linkage are shown in Fig. 4.

The throttle control linkage is adjusted using the following procedure:

1. Install the accelerator rod to the shaft assembly.
2. Depress the accelerator pedal to the floor by pushing the accelerator rod toward the dash panel.
3. Rotate the carburetor throttle lever to the wide open position against the stop.
4. Adjust the accelerator rod until the forward end surface of the throttle lever ball stud. Connect the accelerator rod to the throttle lower ball stud.

The hand throttle control linkage is adjusted using the following procedure:

1. Install hand throttle cable control wire into trunnion on throttle lever and tighten clamp screw.
2. Depress hand throttle cable control knob on instrument panel until it stops.
3. Move carburetor throttle lever against idle stop.
4. Slide hand throttle cable in cable clamp until throttle lever contacts pedal shaft arm.
5. Tighten cable clamp screw.

302 V-8 ENGINE—ECONOLINE

MANUAL TRANSMISSION

1. Remove four engine cover to floor bolts and unlatch the cover at either side. Remove the cover. Remove the air cleaner assembly.

Refer to Fig. 5 for identification of the throttle linkage components.

2. Insert a 3/16 inch diameter alignment pin through the accelerator shaft to carburetor assembly bracket.
3. Adjust the length of the stabilizer rod so that the trunnion enters freely; then install the clevis rod end clip and remove the alignment pin.
4. Depress the accelerator pedal to the floor; then bring the carburetor throttle lever to wide open throttle by adjusting the accelerator shaft to carburetor rod.
5. When the rod is adjusted to fit on the ball studs of the accelerator shaft lever and accelerator cross-shaft, shorten the rod by one turn and install on lever and shaft.
6. **Check the accelerator linkage for proper operation.** Install the air cleaner assembly. Install the engine compartment cover.

AUTOMATIC TRANSMISSION

Instructions for adjusting the automatic transmission throttle linkage are given in Fig. 5.

P-350 THRU 500 SERIES WITH 240 SIX AND 300 LD SIX

MANUAL TRANSMISSION

Refer to Fig. 6.

1. Adjust the engine idle (hot engine) speed and mixture to specification (refer to appropriate carburetor or Part of this Group). Shut off the engine.
2. Loosen the jam nut and adjust the accelerator pedal stop bolt to the specified clearance. Tighten the jam nut.
3. Disconnect the accelerator retracting spring. Loosen the accelerator cable bracket clip screw.
4. Depress the accelerator pedal to the pedal stop bolt; slide the accelerator cable assembly rearward until the carburetor throttle lever is in the wide open throttle position (fully open) and tighten the cable housing bracket clip screw.
5. Connect the accelerator retracting spring.
6. Start the engine and operate the accelerator to check for binds or improper operation.

AUTOMATIC TRANSMISSION

Instructions for adjusting the automatic transmission throttle linkage are given in Fig. 6.

F-100 THRU 350, F-100, 250 (4 x 4) WITH 240 AND 300 SIX

MANUAL TRANSMISSION

Refer to Fig. 7.

1. Disconnect pin at end of stabilizer rod and disconnect the rod from the bracket at the dash.
2. Disconnect the rod assembly from the bellcrank.
3. Insert a 3/16 inch dia. pin thru the three holes in bellcrank control and bracket assembly.
4. Adjust length of stabilizer assembly so that rod end enters bracket freely.
5. Install pin at end of stabilizer rod.
6. Remove gauge pin.
7. Depress accelerator pedal to floor.
8. Bring carburetor throttle lever to wide open position (against stop), by pushing rearward on the bellcrank assembly near the point where it attaches to the rod assembly.
9. Adjust rod assembly so its forward end surface just touches the side of the bellcrank assembly and connect the rod to the bellcrank.

AUTOMATIC TRANSMISSION

Instructions for adjusting the automatic transmission throttle linkage are given in Fig. 7.

F-100 THRU 350 WITH 302, 360 AND 390 V-8

MANUAL TRANSMISSION

Refer to Fig. 8.

1. Install the accelerator rod to the shaft assembly.
2. Depress the accelerator pedal to the floor by pushing the accelerator rod toward the dash panel.
3. Rotate the carburetor throttle lever to the wide open position against the stop.
4. Adjust the accelerator rod until the forward end surface of the rod just touches the rear surface of the throttle lever ball stud. Connect the accelerator rod to the throttle lower ball stud.

F-AND B-500 THRU 600 SERIES WITH 240 SIX AND 300 SIX

MANUAL TRANSMISSION

Refer to Fig. 9.

1. Adjust the engine idle (hot engine) speed and fuel mixture to specification (refer to appropriate carburetor Part of this Group). Shut off the engine.

2. Loosen the hand throttle cable clip retaining screw and adjust the hand throttle cable housing to the specified dimension, if required.
3. Loosen the cable housing clip. Push the accelerator pedal down to the pedal stop bolt on the floor. Set the carburetor throttle lever to the wide open throttle position, adjust the cable housing assembly to remove any slack and tighten the accelerator cable bracket clip.
4. Loosen the screw retaining the hand throttle cable to the hand throttle lever, located on the accelerator shaft assembly throttle shaft (bellcrank) assembly. Check the hand throttle cable housing to retaining clip for the specified clearance. Loosen the clip and adjust the cable, if required. Tighten the clip screw.
5. With the hand throttle knob on the instrument panel fully depressed and the accelerator shaft assembly in the closed position, insert a feeler gauge of the specified thickness (idle clearance) between the accelerator shaft assembly and the hand throttle lever on the shaft. With the hand throttle cable in the hand throttle lever clevis, feeler gauge in position and the slack removed from the hand throttle cable; tighten the hand throttle cable to hand throttle lever retaining screw.
6. Remove the feeler gauge, start the engine and check the clearance adjustment with the engine operating at idle speed. Operate the accelerator to check for binds or improper operation.

F-AND B-500 THRU 750 SERIES WITH 330, 361 AND 391 V-8

MANUAL TRANSMISSION

Refer to Fig. 10.

1. Adjust the engine idle (hot engine) speed and fuel mixture to specification (refer to appropriate carburetor Part of this Group) and turn off the engine.
2. Adjust the control rod assembly so that the pedal is against the pedal stop bolt with the carburetor throttle plate fully closed.
3. Start the engine and operate the accelerator to check for binds or improper operation.

L-, LT-, LTS-, LN-800, LNT-800 AND LN-500-750 SERIES WITH 330, 361 AND 391 V-8

MANUAL TRANSMISSION

Refer to Fig. 11.

1. Adjust the engine idle (hot engine) speed and fuel mixture to specification (refer to appropriate carburetor Part of this Group) and turn off the engine.
2. Adjust the control rod assembly so that the pedal is against the pedal stop bolt with the carburetor throttle plates fully closed. Be sure the stop bolt is firmly bottomed.
3. Start the engine and operate the accelerator to check for binds or improper operation.

AUTOMATIC TRANSMISSION

Refer to Figure 12 for instructions on adjusting the automatic transmission throttle linkage.

L-, LT-, LTS-, LN-, LNT-900 SERIES WITH 401, 477 AND 534 SD V-8

MANUAL TRANSMISSION

Refer to Fig. 13.

1. Adjust the engine idle (hot engine) speed and fuel mixture to specification (refer to appropriate carburetor Part of this group) and turn off the engine.
2. Adjust the control rod assembly so that the accelerator pedal is against the pedal stop bolt with the carburetor throttle plates fully closed. Be sure the stop bolt is firmly bottomed.
3. Start the engine and operate the accelerator to check for binds or improper operation.

AUTOMATIC TRANSMISSION

Refer to Fig. 14 for instructions on adjusting the automatic transmission throttle linkage.

C-AND CT-SERIES WITH 401, 477 AND 534 SD V-8

MANUAL TRANSMISSION

Refer to Fig. 15 for instructions on adjusting the manual transmission throttle linkage.

AUTOMATIC TRANSMISSION

Refer to Fig. 16 for instructions on adjusting automatic transmission throttle linkage.

CT-800 AND C-500 THRU 800 SERIES WITH 330 HD SIX AND 330, 361 AND 391 V-8

MANUAL TRANSMISSION

Refer to Fig. 17 for instructions on adjusting throttle linkage.

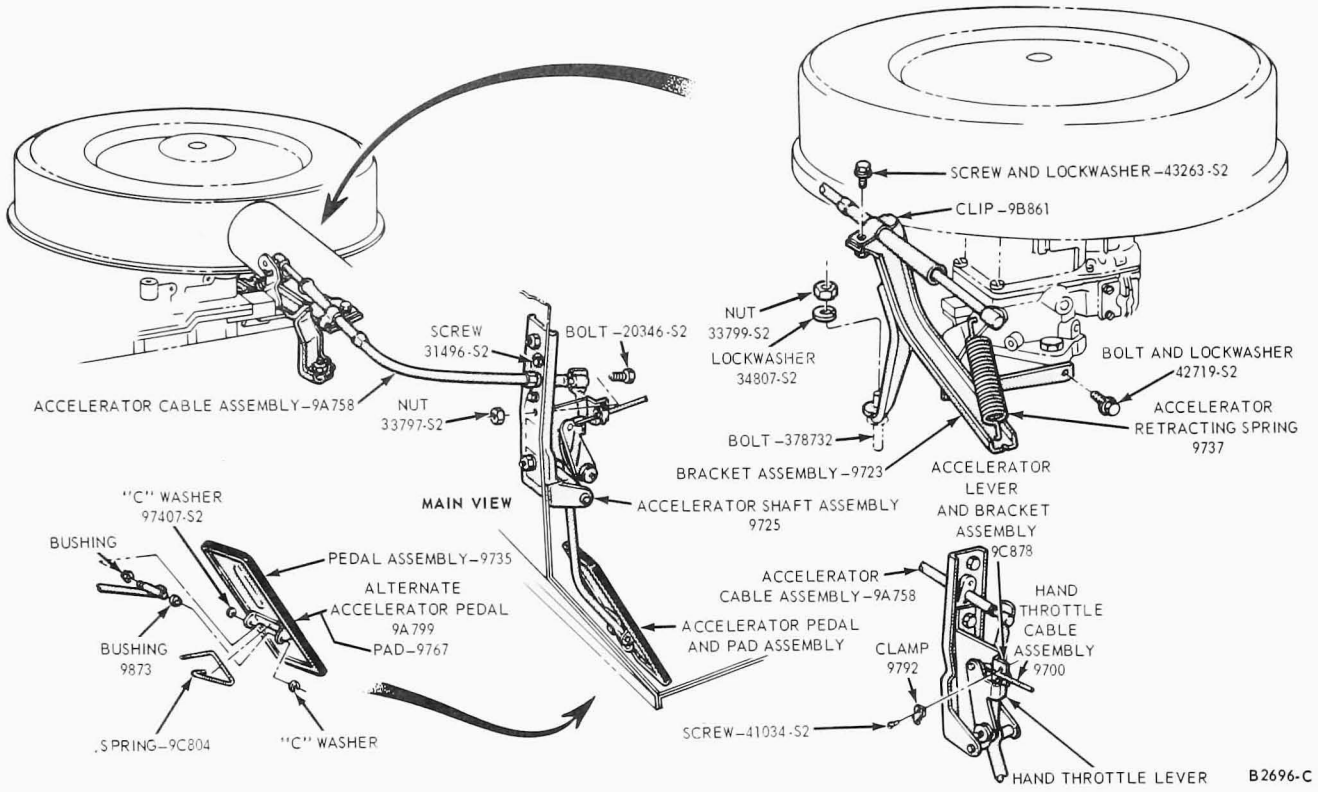

FIG. 1 Throttle Linkage—Bronco 200 Six

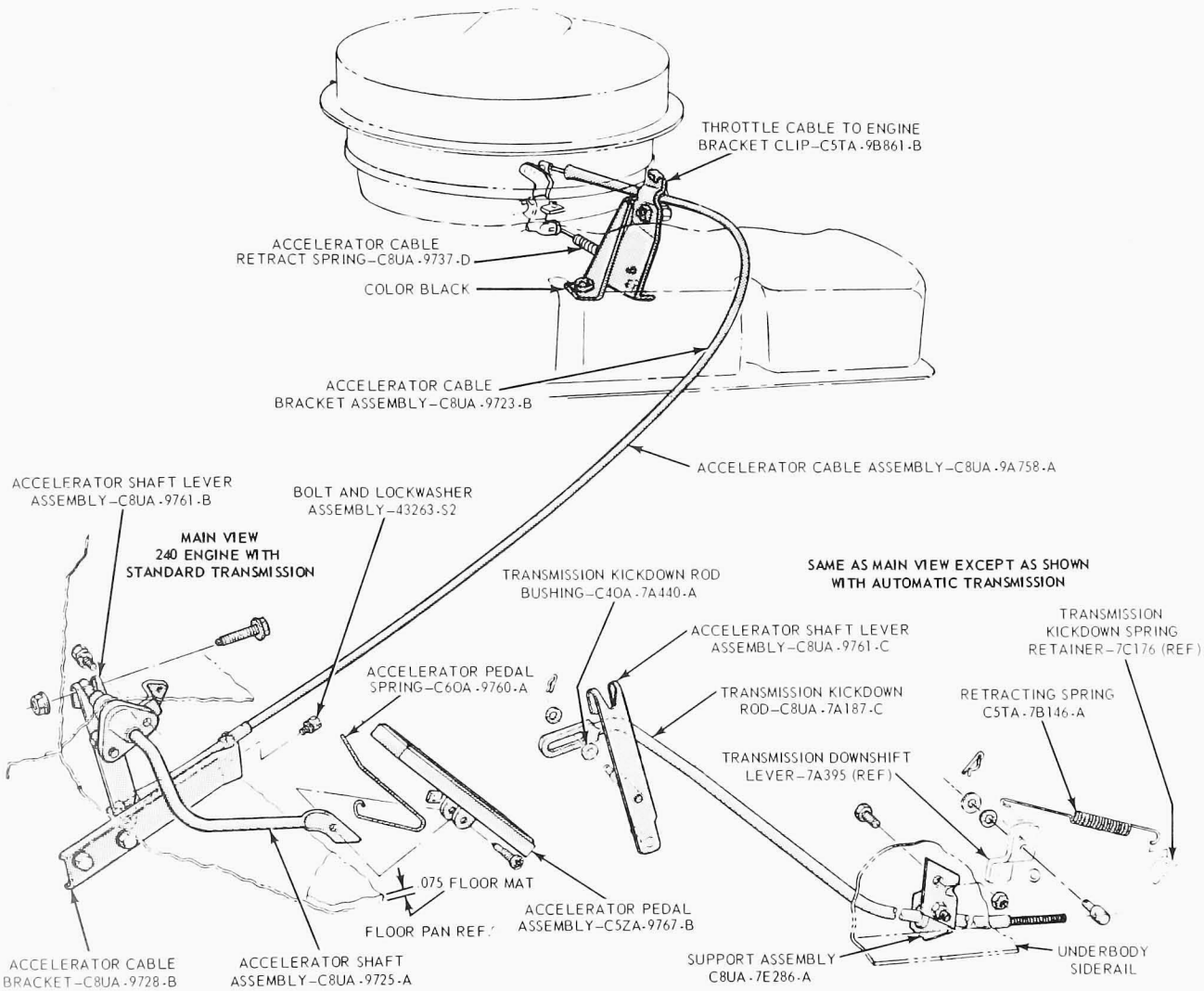

ACCELERATOR ADJUSTMENT PROCEDURE

1. DEPRESS ACCELERATOR PEDAL TO FLOOR
2. LOOSEN CLAMP SCREW, SLIDE CABLE IN BRACKET UNTIL CARBURETOR THROTTLE LEVER IS POSITIONED AGAINST WIDE OPEN STOP
3. TIGHTEN CLAMP SCREW UNTIL CABLE IS HELD SECURELY.

AUTOMATIC TRANSMISSION KICKDOWN LINKAGE ADJUSTMENT

1. AFTER ABOVE ACCELERATION ADJUSTMENT DEPRESS ACCELERATOR TO WIDE OPEN THROTTLE
2. MOVE KICK-DOWN ROD TO ITS MAXIMUM REARWARD POSITION
3. MOVE TRANSMISSION KICK-DOWN CONTROL LEVER TO ITS MAXIMUM FORWARD POSITION
4. TURN TRUNNION ON ROD UNTIL IT ALIGNS WITH HOLE IN LEVER, THEN LENGTHEN 1 TO 2 TURNS
5. ASSEMBLE TO TRANSMISSION DOWNSHIFT LEVER.

V 1189-C

FIG. 2 Throttle Linkage Econoline 240 Six

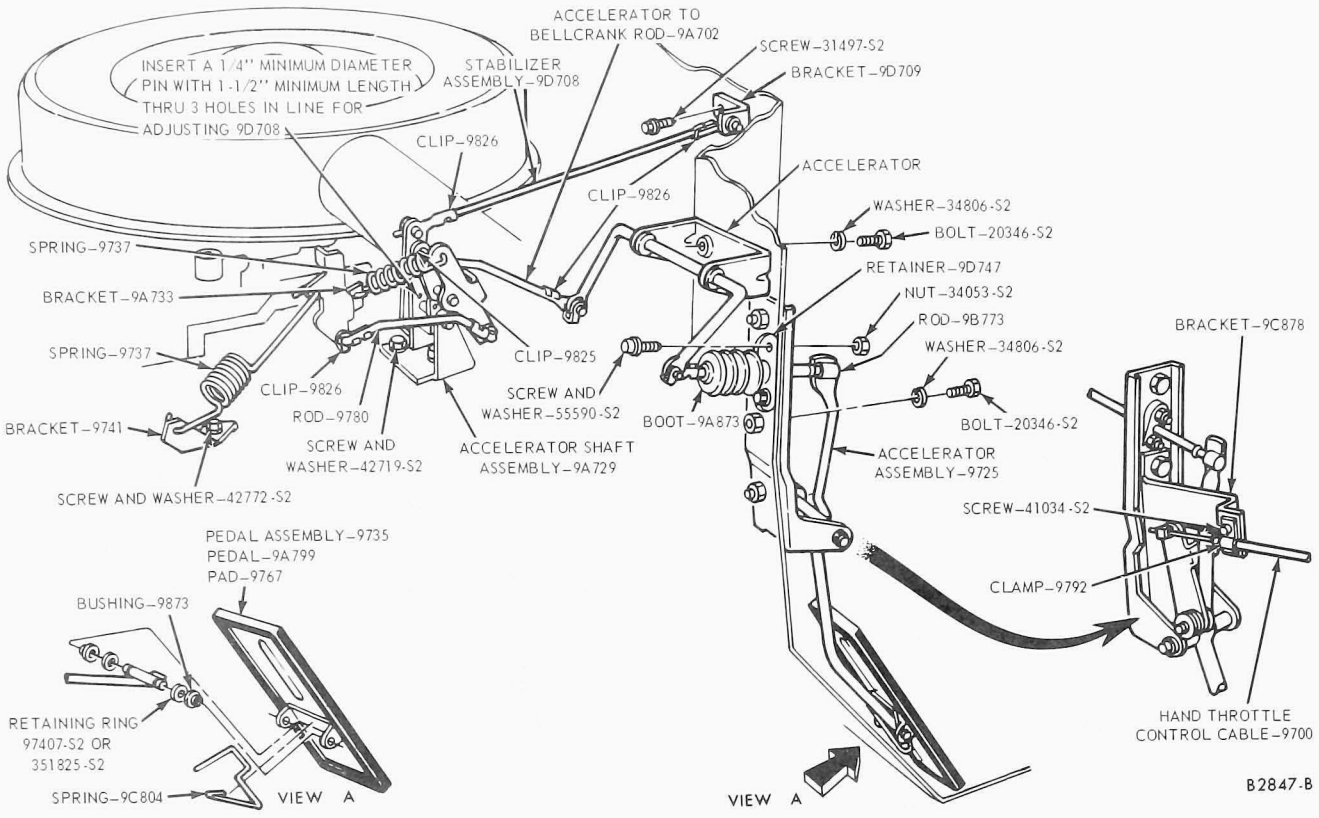

FIG. 3 Throttle Linkage Bronco 302 V-8

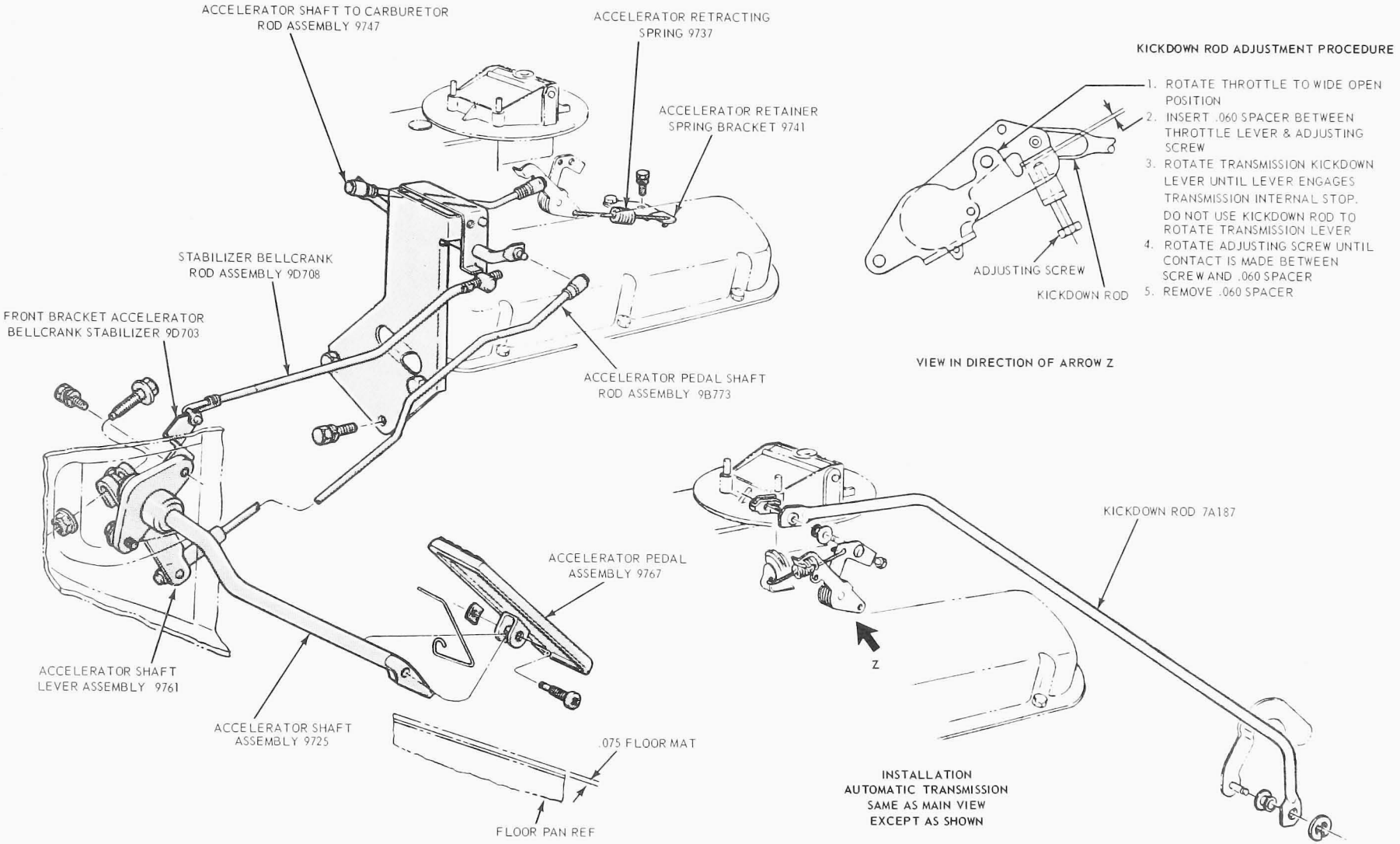

FIG. 4 Throttle Linkage Econoline 302 V-8

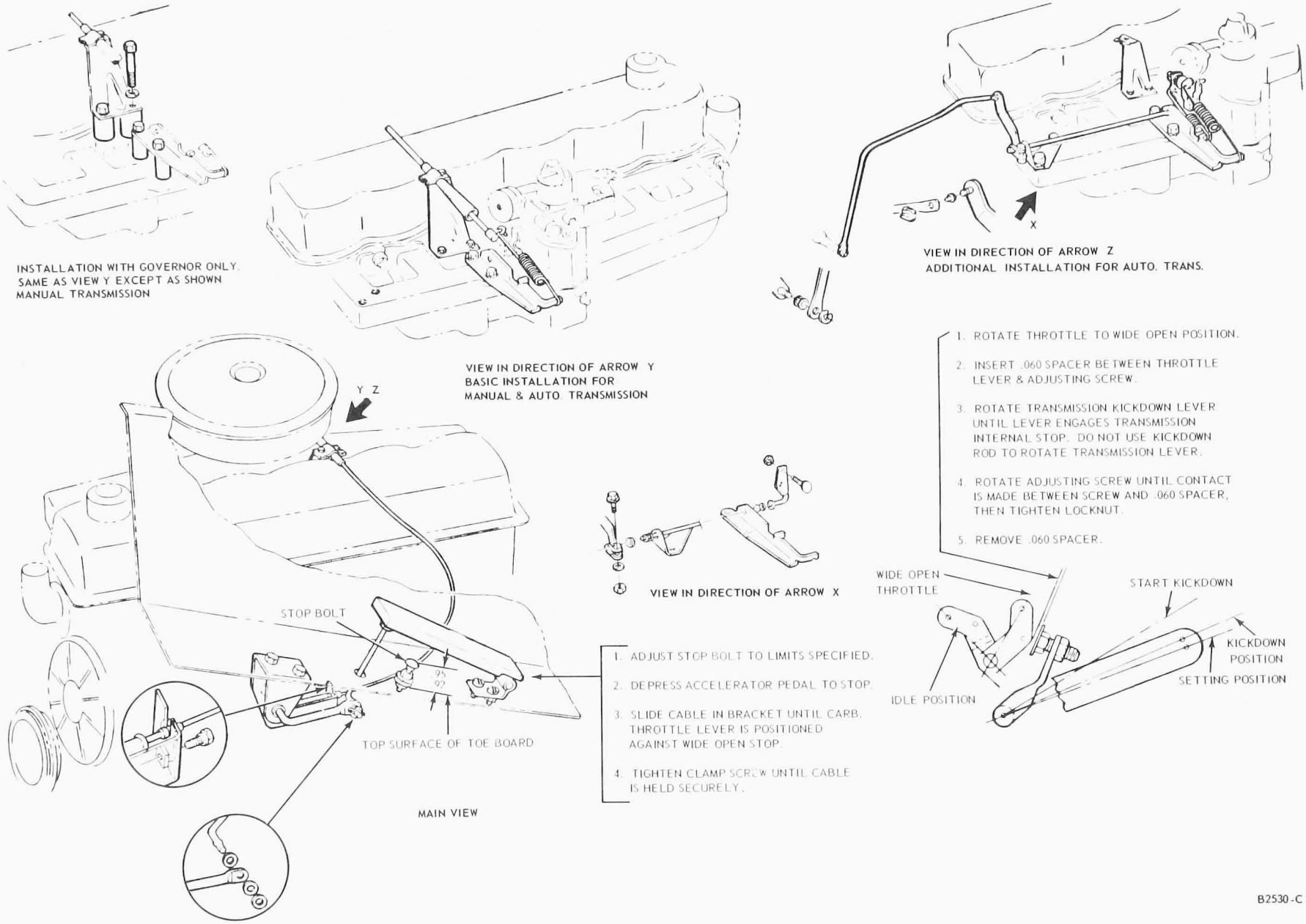

FIG. 5 Throttle Linkage P-350 thru 500 Series with 240 Six

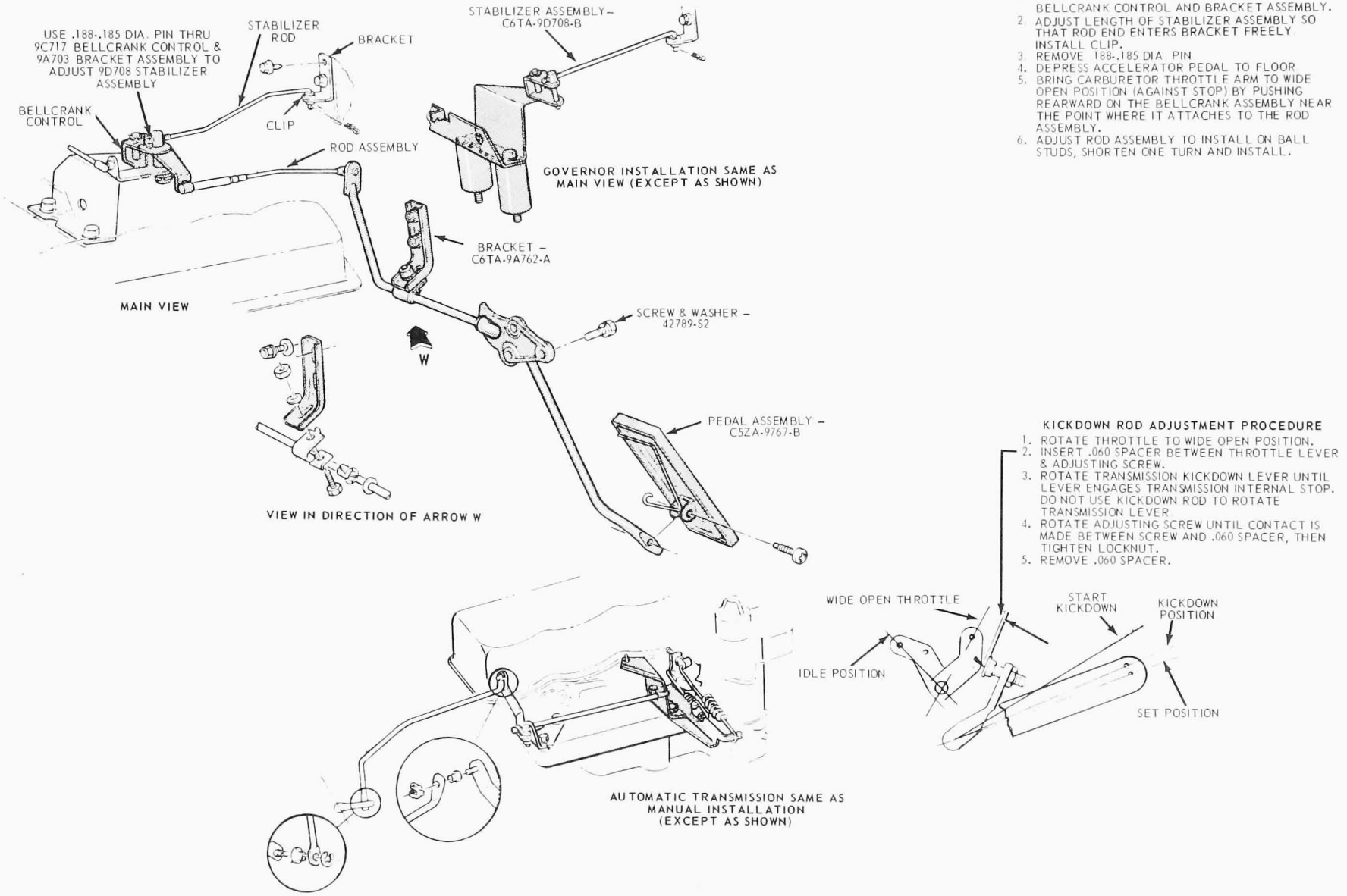

FIG. 6 Throttle Linkage—F-100-350 Series, F-100, 250 4 x 4 with 240 and 300 Six

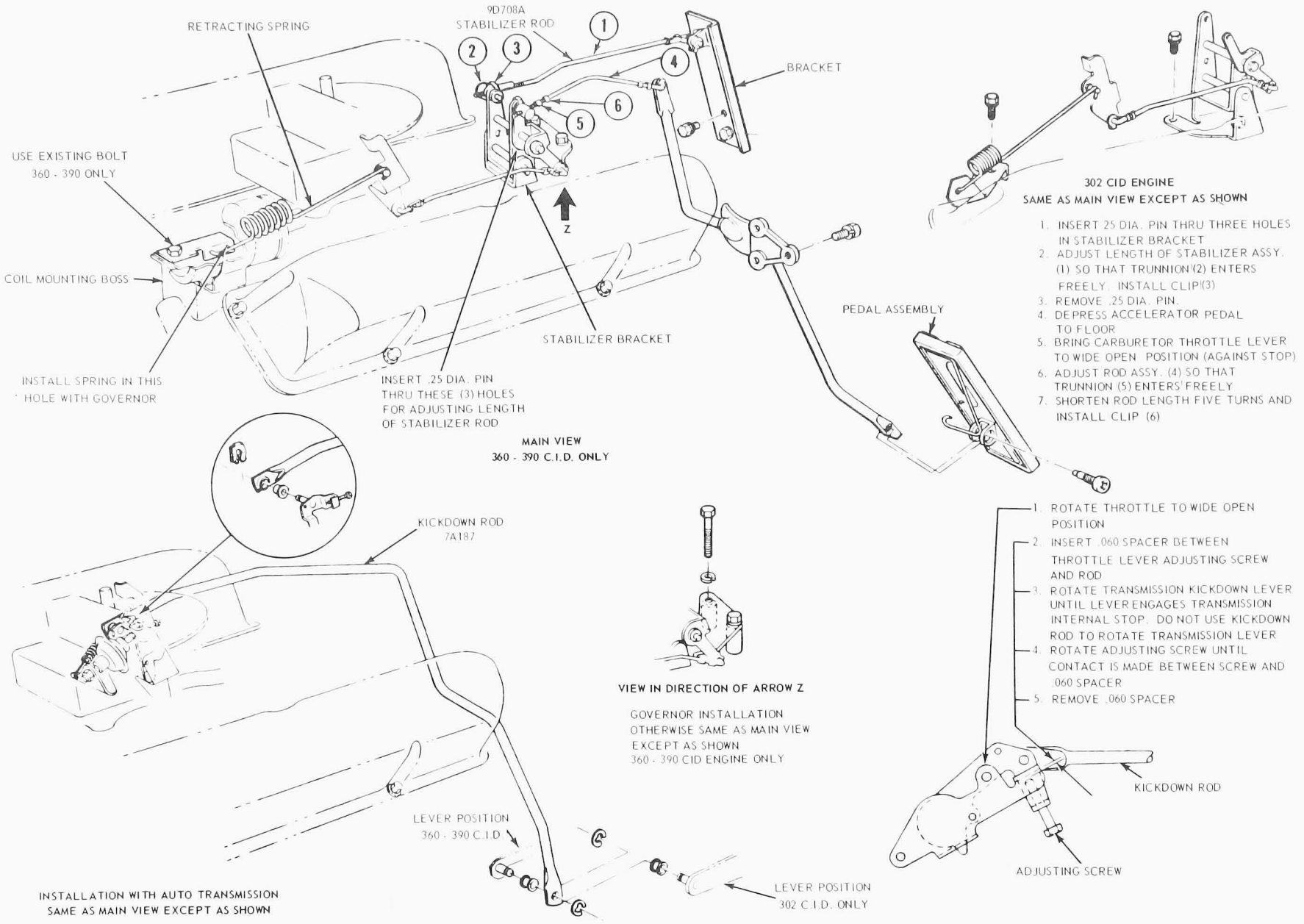

FIG. 7 Throttle Linkage F-100 thru 350 Series with 302, 360 and 390 V-8

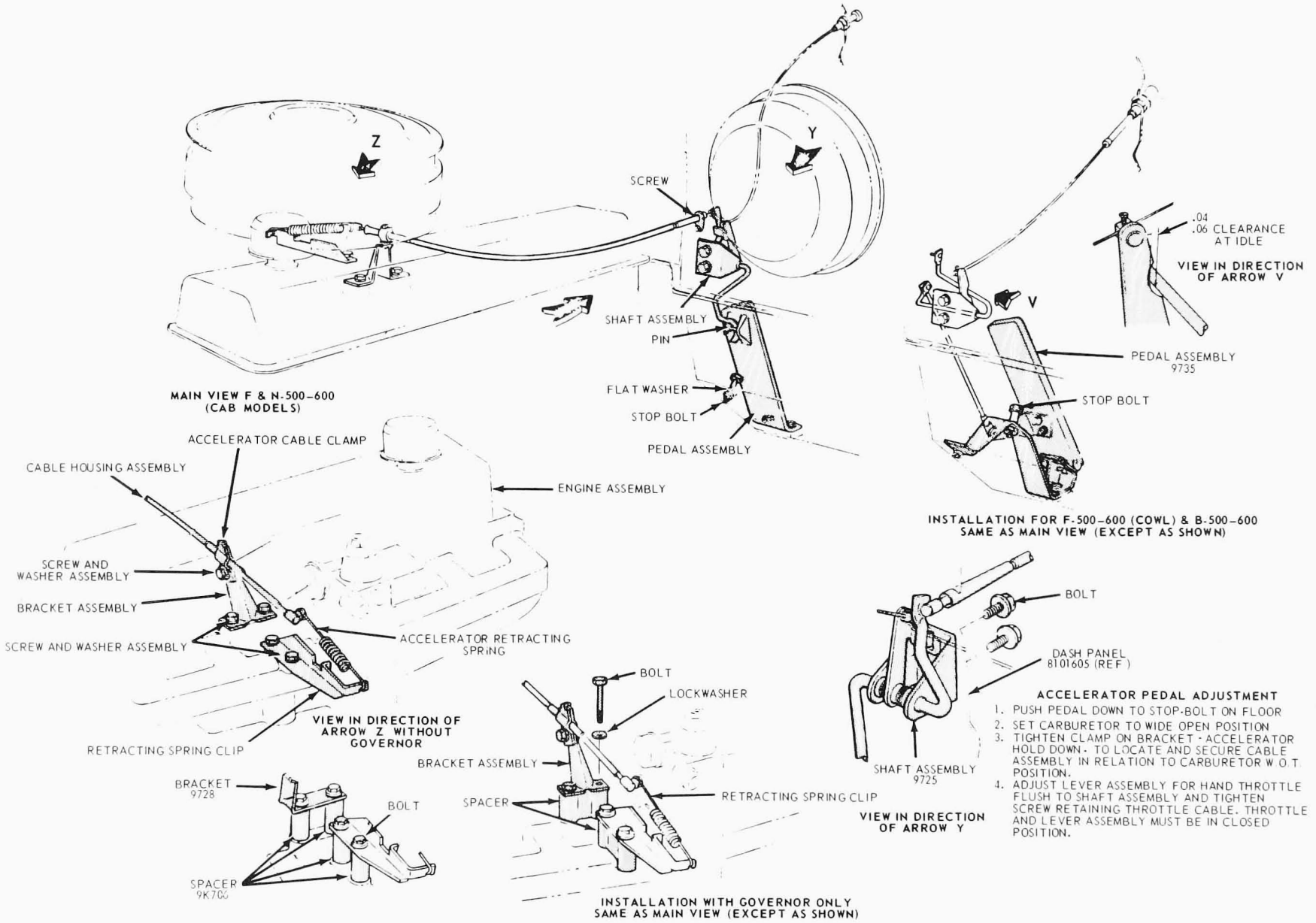

FIG. 8 Throttle Linkage B and F-500 and 600 Series with 240 Six and 300 Six

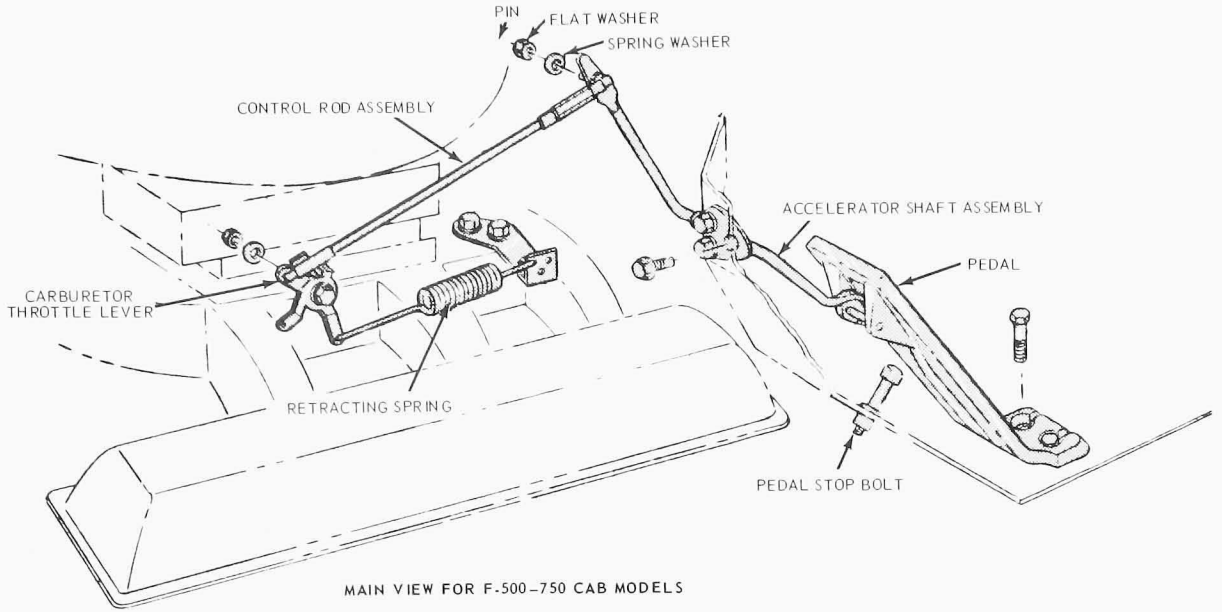

MAIN VIEW FOR F-500–750 CAB MODELS

1. ADJUST THE ENGINE IDLE AND FUEL MIXTURE TO HOT ENGINE SPECIFICATIONS.
2. STOP THE ENGINE AND ADJUST THE CONTROL ROD ASSEMBLY SO THAT THE PEDAL IS AGAINST THE STOP BOLT AT WIDE-OPEN THROTTLE.

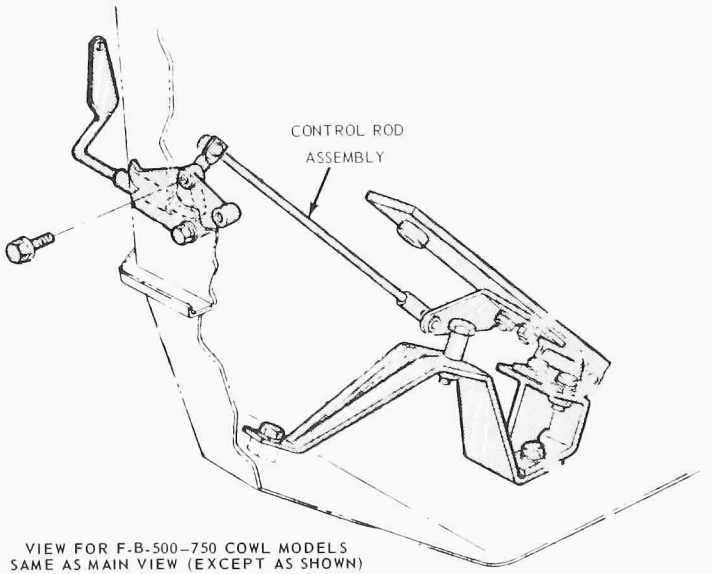

VIEW FOR F-B-500–750 COWL MODELS
SAME AS MAIN VIEW (EXCEPT AS SHOWN)

V 1033-C

FIG. 9 Throttle Linkage B and F-500 thru 750 with 330, 361 and 391 V-8

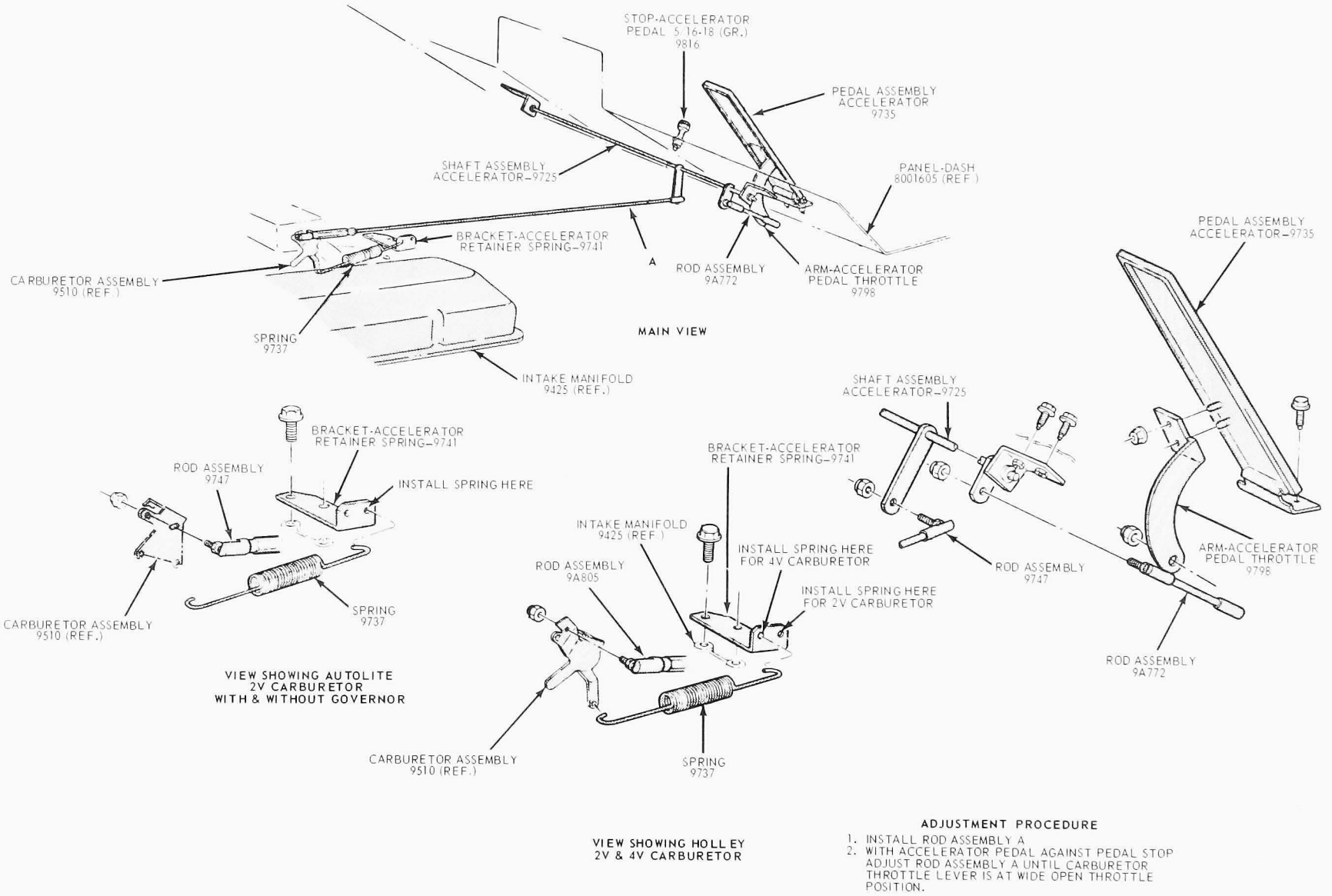

FIG. 10 Throttle Linkage L, LT, LTS, LN-800, LNT-800 and LN-500-750 Series with 391 V-8

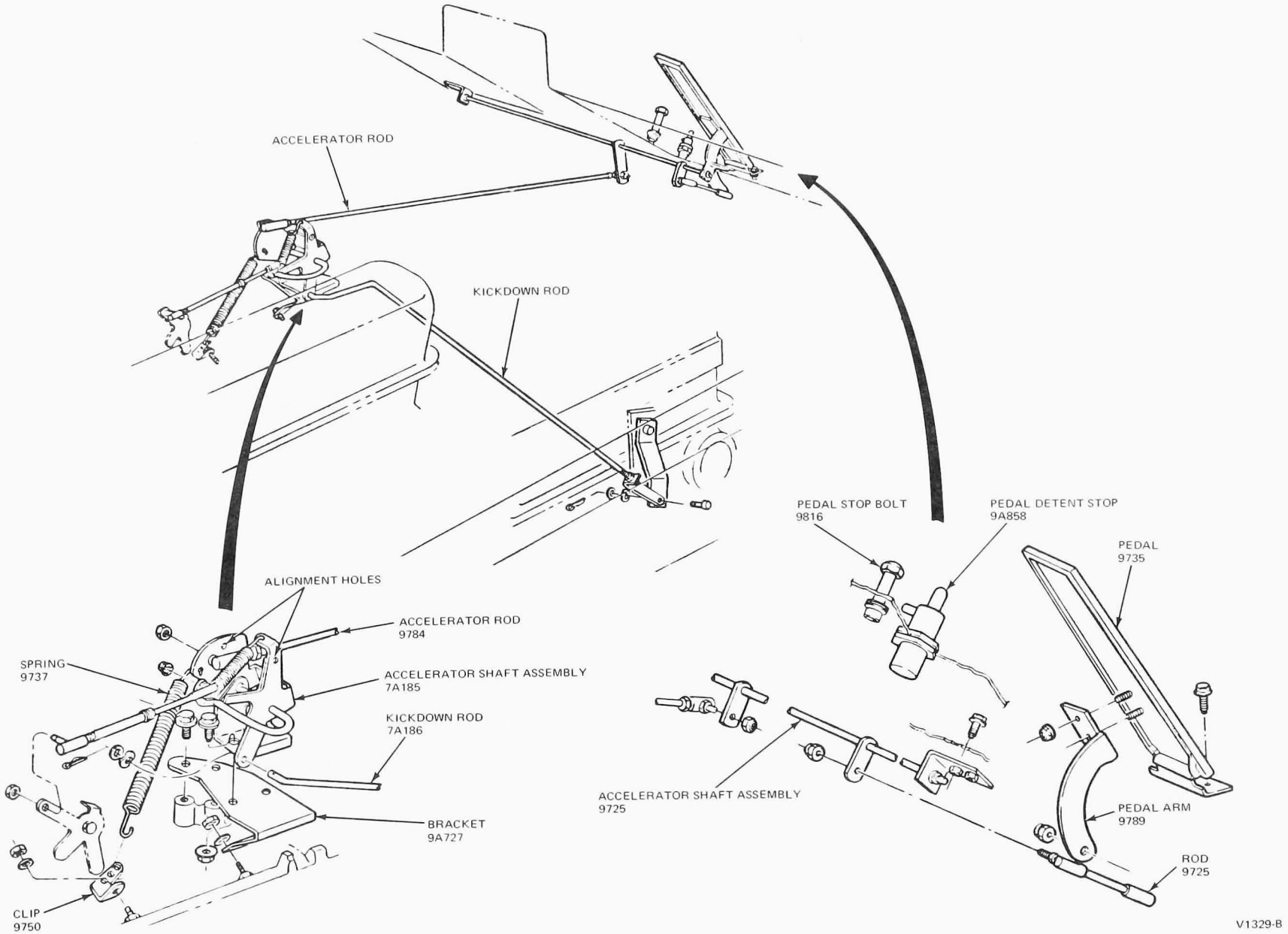

FIG. 11 Throttle Linkage L, LT, LTS, LN-800, LNT-800 Series with 330, 361, 391 V-8 with Transmatic

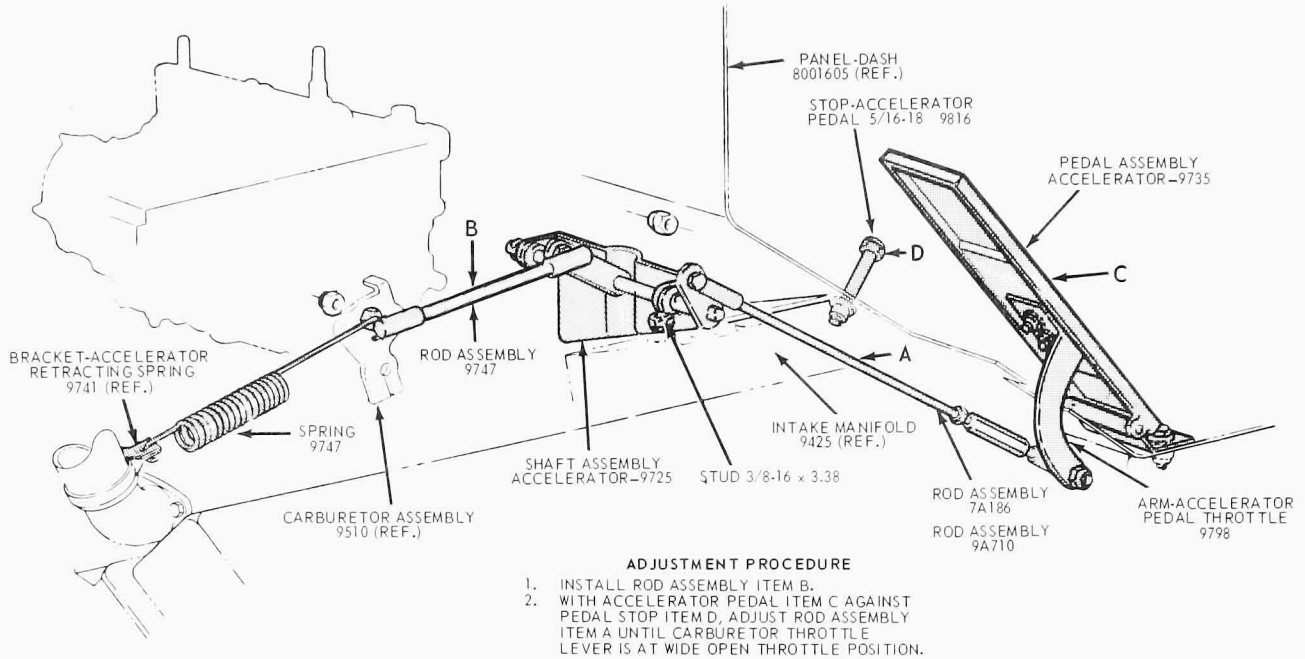

FIG. 12 Throttle Linkage L, LT, LTS, LN, LNT-900 Series with 401, 477 and 534 SD V-8

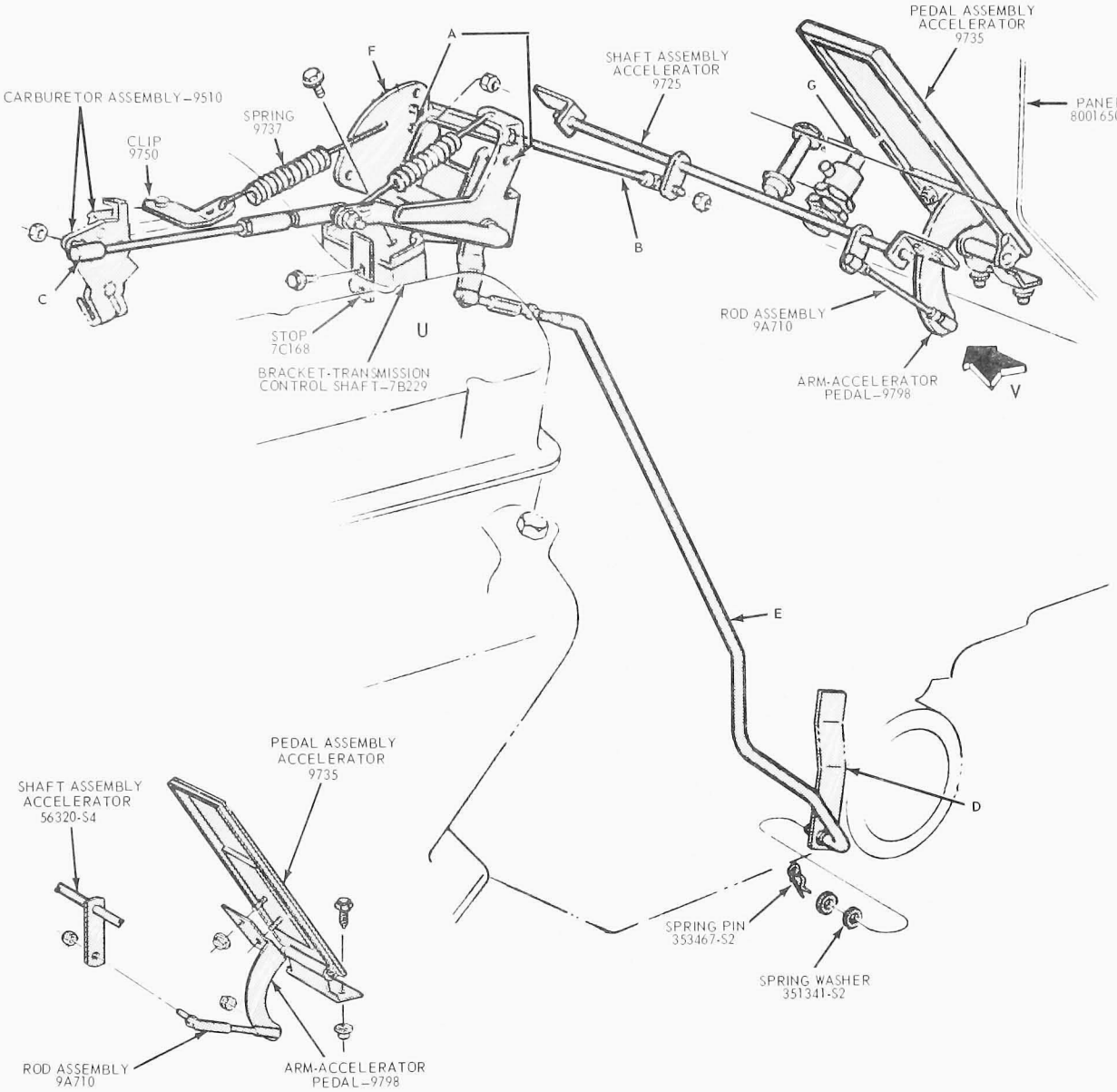

VIEW IN DIRECTION OF ARROW V

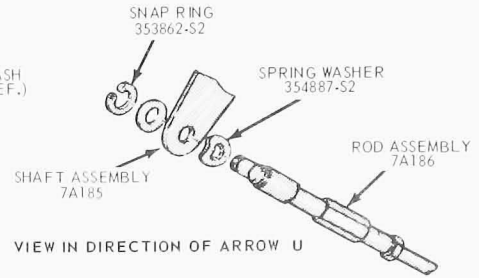

VIEW IN DIRECTION OF ARROW U

INSTALLATION & ADJUSTMENT PROCEDURE

1. WITH THE TRANSMISSION IN DRIVE AND THE ENGINE AT NORMAL OPERATING TEMPERATURE, ADJUST CARBURETOR SETTING TO OBTAIN ENGINE IDLE SPECIFIED.
   NOTE: ENGINE MUST NOT BE RUNNING WHILE ADJUSTING STEPS 2, 3, & 4 ARE MADE.
2. INSERT A .245-.250 DIA. PIN THRU LOCKING HOLES "A".
3. ADJUST STOP 'H' TO CONTACT ROD 'C'.
4. ADJUST ROD 'C' TO LENGTH WITH CARBURETOR LEVER AT IDLE POSITION.
5. PLACE LEVER "D" IN EXTREME REARWARD POSITION AND INSTALL ROD "E". SHORTEN ROD "E" BY THREE (3) TURNS.
6. REMOVE LOCKING PIN. HOLD ACCELERATOR PEDAL AGAINST STOP AND ADJUST ROD 'B' UNTIL LEVER 'D' IS ROTATED BACK AGAINST THE FULL KICK DOWN STOP.
7. ADJUST DETENT STOP 'G' TO JUST CONTACT THE ACCELERATOR PEDAL WHEN CARBURETOR THROTTLE LEVER IS IN WIDE-OPEN POSITION.
8. CHECK SHIFT POINTS AND DOWNSHIFT. IF FULL THROTTLE (AT DETENT) UPSHIFT DOES NOT OCCUR BETWEEN THE FOLLOWING ENGINE R.P.M.
   3525 TO 3575 FOR 401 CU. IN. ENG.
   3325 TO 3375 FOR 477 CU. IN. ENG.
   3125 TO 3175 FOR 534 CU. IN. ENG.
   IT WILL BE NECESSARY TO RE-ADJUST THE ROD ASSEMBLY E AS FOLLOWS:
   TO RAISE SHIFT POINT R.P.M. SHORTEN ROD ASSEMBLY
   TO LOWER SHIFT POINT R.P.M. LENGTHEN ROD ASSEMBLY

V 1327-B

FIG. 13 Throttle Linkage L, LT, LTS-900 with 401, 477, 534 SD V-8 with Transmatic

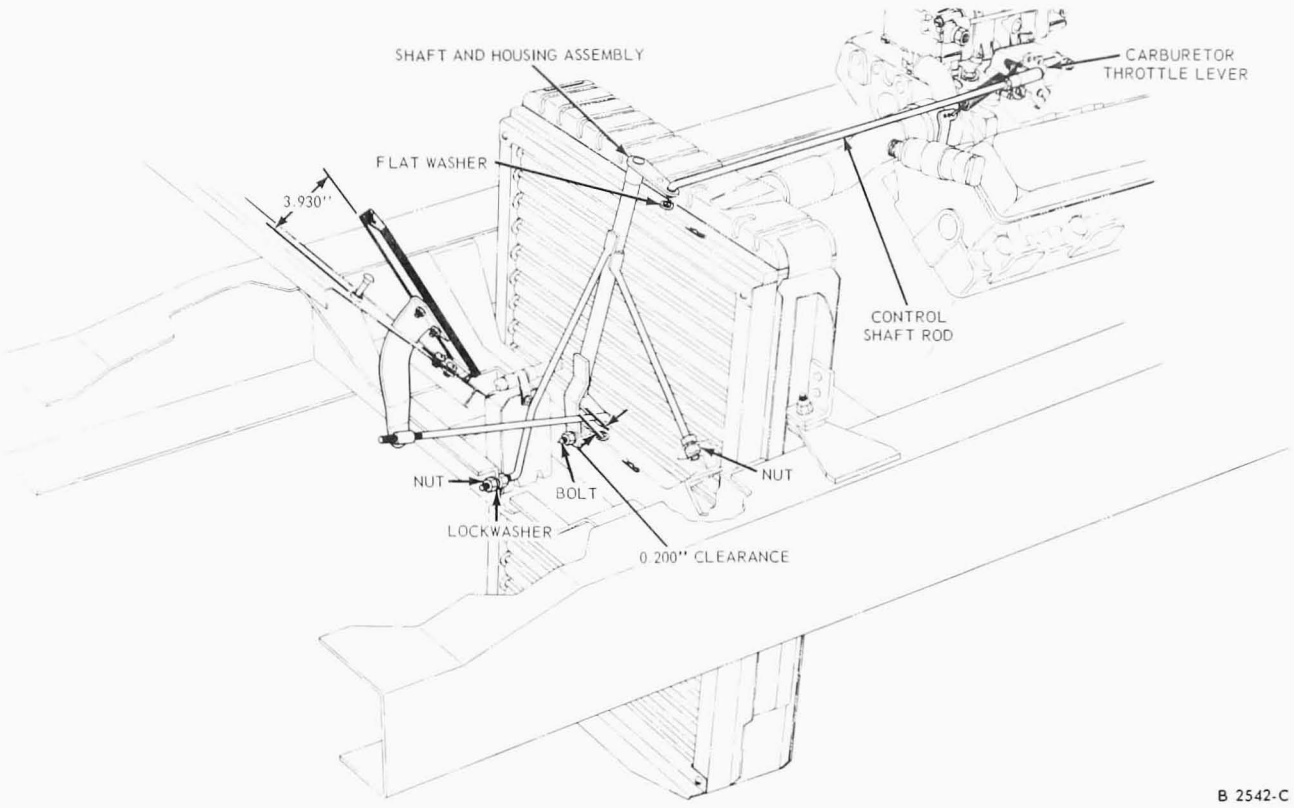

FIG. 14 Throttle Linkage—C and CT-Series with 401, 477 and 534 SD V-8

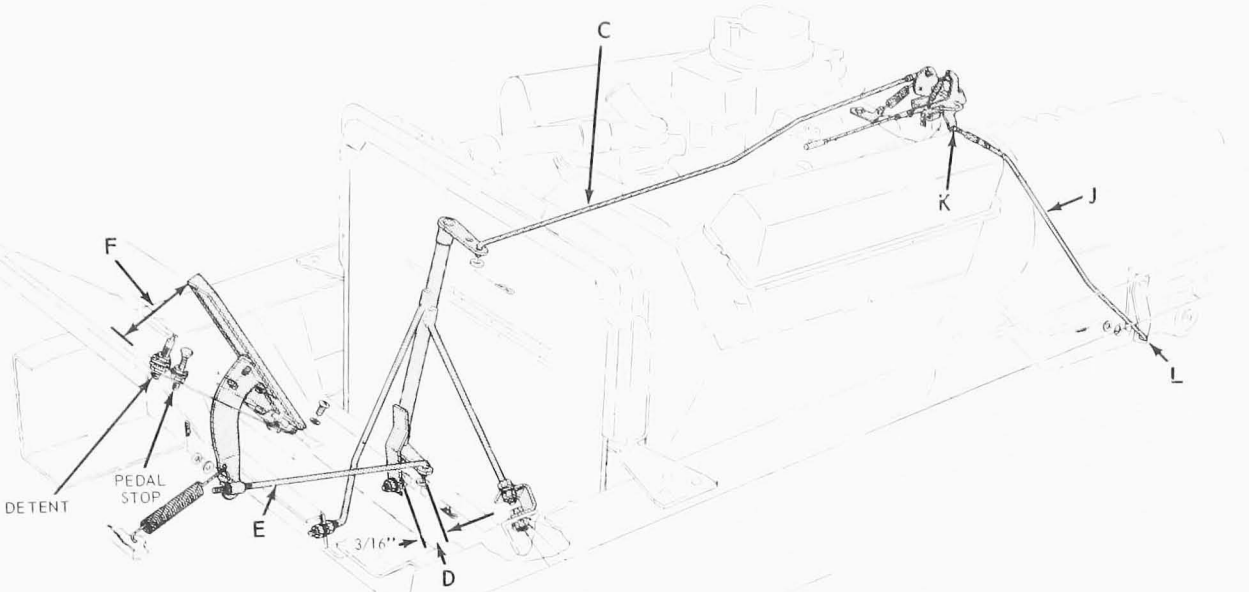

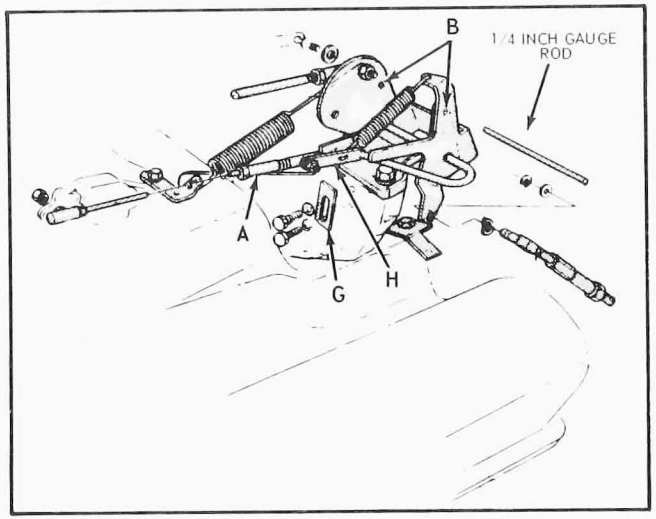

1. ADJUST ENGINE IDLE SPEED TO SPECIFICATION STOP ENGINE.
2. ADJUST ROD A UNTIL A 1/4-INCH GAUGE PIN CAN BE INSERTED AT B.
3. ADJUST ROD C UNTIL A 3/16-INCH CLEARANCE IS OBTAINED AT POINT D.
4. ADJUST ROD E UNTIL A 4-INCH CLEARANCE IS OBTAINED AT POINT F.
5. ADJUST THE STOP G UNTIL IT TOUCHES SHAFT H.
6. DISCONNECT ROD J AT POINT K AND PUSH DOWNWARD UNTIL LEVER L IS AGAINST THE INTERNAL TRANSMISSION STOP. ADJUST THE ROD UNTIL IT FREELY ENTERS THE PIVOT AT POINT K. SHORTEN THE ROD BY TURNING THE ADJUSTING SLEEVE CLOCKWISE 3 TURNS. RE-CONNECT ROD J AND REMOVE GAUGE PIN.
7. ADJUST ACCELERATOR PEDAL DETENT STOP TO JUST MAKE CONTACT WITH THE ACCELERATOR PEDAL WHEN CARBURETOR THROTTLE LEVER CONTACTS THE FULL THROTTLE STOP ON THE CARBURETOR.
8. DEPRESS THE ACCELERATOR PEDAL COMPLETELY UNTIL THE TRANSMISSION CONTROL ROD J IS AT MAXIMUM UPWARD TRAVEL. ADJUST THE ACCELERATOR PEDAL STOP TO JUST CONTACT THE UNDERSIDE OF THE PEDAL.
9. IF THE THROTTLE (AT DETENT) UPSHIFT DOES NOT OCCUR WITHIN SPECIFICATIONS, RE-ADJUST THE CONTROL ROD J. SHORTEN THE ROD TO INCREASE SHIFT RPM; LENGTHEN TO DECREASE SHIFT RPM.

V 1335-B

FIG. 15 Throttle Linkage C and CT-Series with 401, 477 and 534 SD V-8 with Transmatic

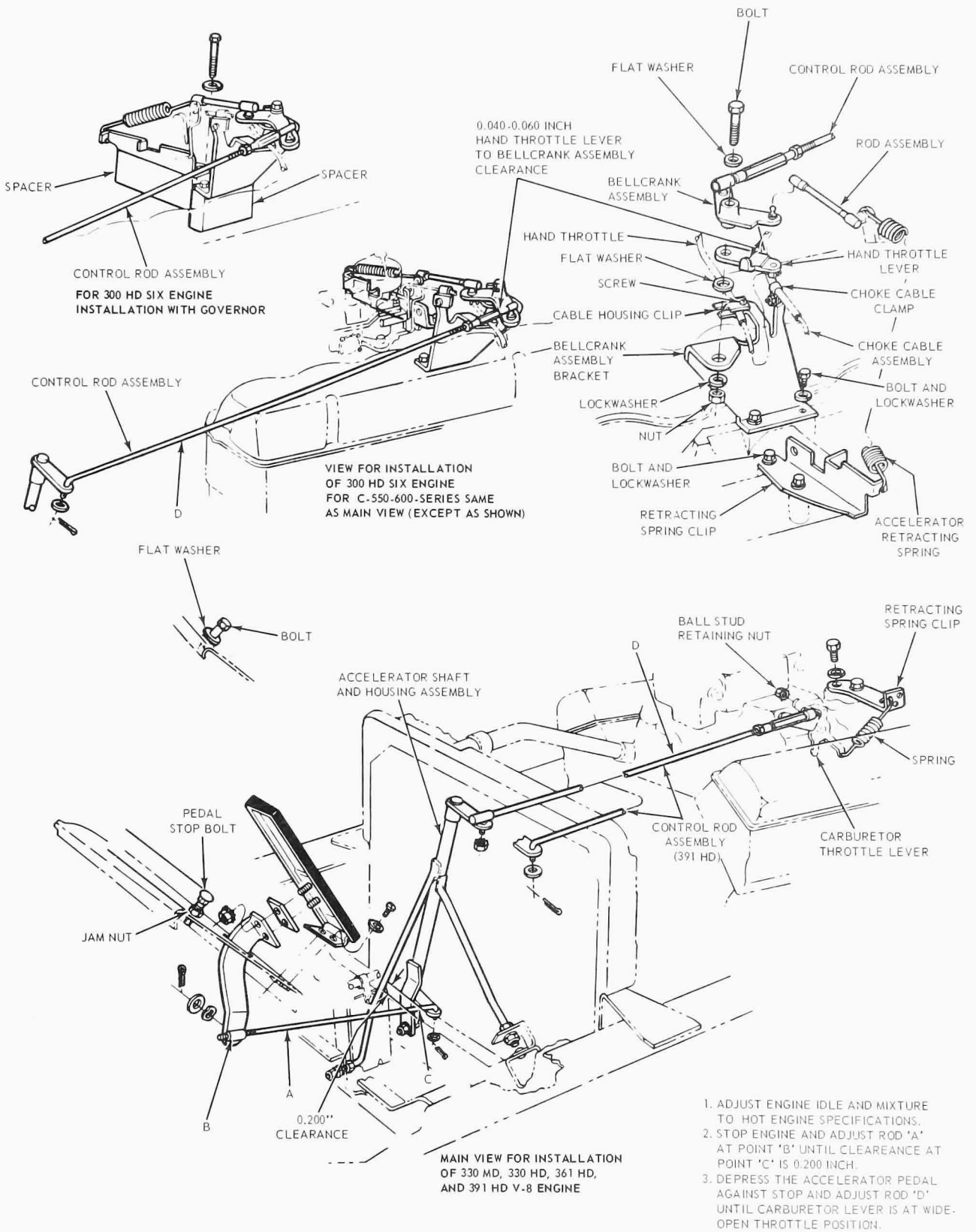

FIG. 16 Throttle Linkage CT-800 and C-500 thru 800 Series with 300 HD Six or 330, 361 and 391 V-8

Fuel System—Diesel Engines

GROUP 25

PART 25-01	PAGE
General Fuel System Service – Diesel Engines	25-01-01
PART 25-02	
Models 1140, 1145, 1150 and 1160 Diesel Fuel System	25-02-01
PART 25-03	
NH Series Diesel Fuel System	25-03-01
PART 25-04	
Models 6V-53N, 6-71N and 8V-71N Diesel Fuel System	25-04-01
PART 25-30	
Lift Pumps	25-30-1
PART 25-40	
Air Cleaners	25-40-1
PART 25-50	
Fuel Tanks and Lines	25-50-1
PART 25-51	
Fuel Filters	25-51-1
PART 25-60	
Throttle Linkage	25-60-1

PART 25-01 General Fuel System Service-Diesel System

Refer to Part 25-02 through 25-60 for Diesel fuel system service. For information not covered in these parts refer to the appropriate engine manufacturers service manual.

PART 25-02 Ford V-8 Diesel

COMPONENT INDEX	Page	COMPONENT INDEX	Page
FUEL SYSTEM		IDLE SPEED ADJUSTMENTS	
Description	02-01	High and Low Idle Adjustments	02-01

DESCRIPTION

A schematic diagram of the Ford V-8 Series Diesel Engine is shown in Figure 1.

A mechanically operated diaphragm type transfer pump is used to draw fuel from the supply tank to the multi-plunger injection pump. The transfer pump is mounted directly to the side of the fuel injection pump housing and is actuated by an arm riding on an eccentric on the camshaft. A two-stage fuel filter is placed on the pressure side of the transfer pump. Since the filter is located on the pressure side of the transfer pump the possibility of air induction into the fuel system is eliminated.

From the fuel filter the fuel travels through the engine shut-off solenoid to the multi-plunger injection pump. Eight individual barrel and plunger type fuel injection pumps meter and pressurize the fuel. The pressurized fuel then travels through high pressure lines to its respective cylinder injector where it is injected.

The injectors are of the direct injection type. They spray atomized fuel into each cylinder and seal against fuel drip. All injectors are interconnected by an excess fuel return line system which carries all unused fuel back to the supply tank.

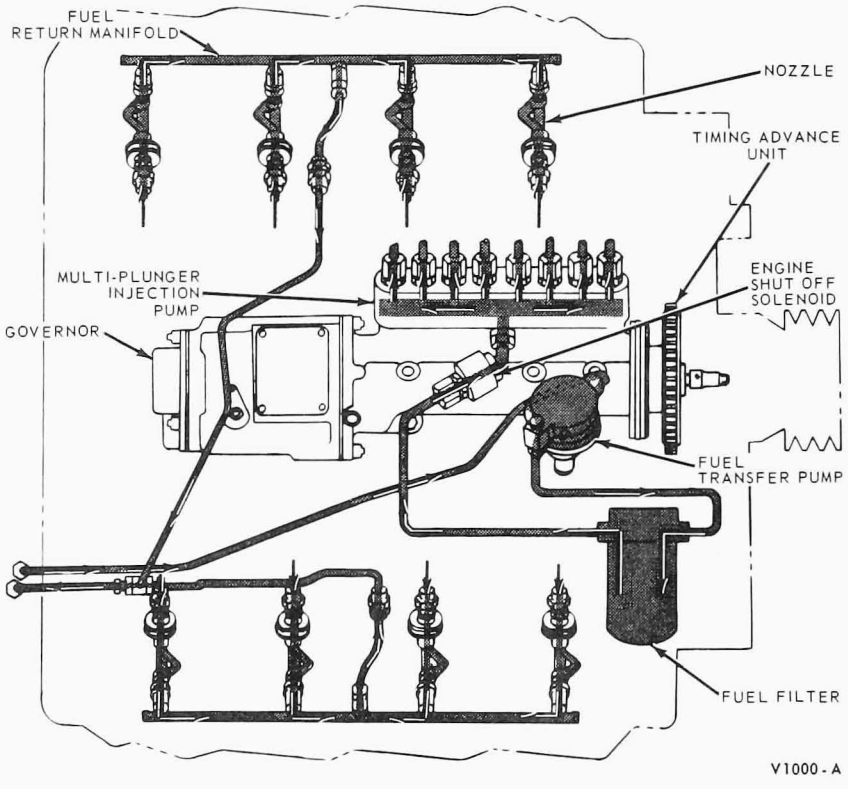

FIG. 1 Ford V-8 Series Diesel Engine Fuel System

ADJUSTMENTS

IDLE SPEED ADJUSTMENT

Check the engine high (governed no-load) rpm and low idle rpm per the chart shown in Fig. 2. Use of a direct reading tachometer is recommended.

If the high idle or low idle rpm is not to specifications, free up or adjust the throttle linkage before making any adjustment of the governor settings. The idle settings, both high and low, are adjusted at the factory and any deviation from specifications should be due to the throttle linkage assembly or operation.

If throttle linkage adjustment will not correct the idle speeds to specifications, follow the procedure given below to adjust both high and low idle. **Only qualified personnel should perform this operation.**

HIGH AND LOW IDLE RPM

Check the engine rpm with an accurate tachometer. Install the tachometer on the adapter located on

the front cover (Fig. 3). The reading taken at this point, with a 1:1 tachometer, will be one-half engine rpm.

Remove the high idle adjustment screw cover from the rear of the governor. Turn the high idle adjusting screw (Figs. 4 and 5) clockwise to increase or counterclockwise to decrease high idle speed. **If the adjusting screw requires alignment to install the cover, turn the screw in a clockwise direction the minimum distance required for installation.**

Adjust low idle speed by loosening lock nut (Fig. 4) and turning the adjustable stop. Turning the stop IN decreases and OUT increases the low idle speed. Tighten the lock nut and recheck the adjustment.

Model	ENGINE SPEED – RPM		
	High Idle	Full Load	Low Idle (+0, –10 RPM)
150 HP	3380	3200	525
175 HP	3450	3200	525
200 HP	3320	3000	525
225 HP	3080	2800	525

CV1061-A

FIG. 2 Idle RPM Chart

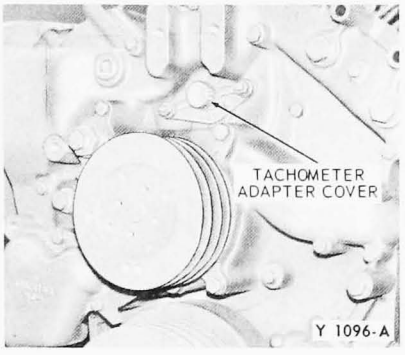

FIG. 3 Tachometer Adapter Location

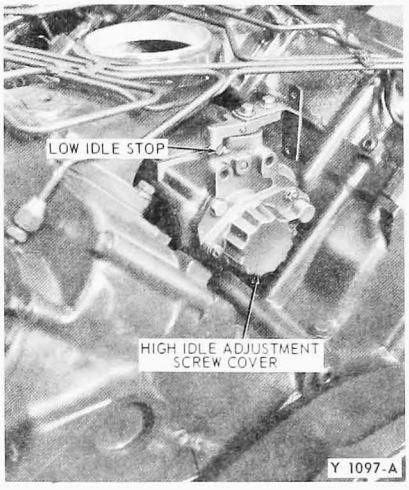

FIG. 4 Idle Adjustment Locations

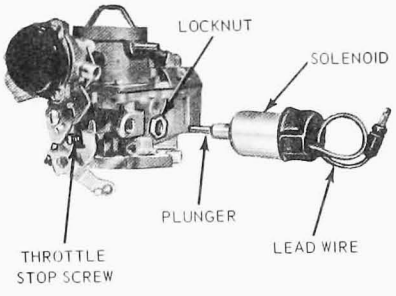

V1098-A

FIG. 5 High Idle Adjustment Screw

PART 25-03 Cummins Diesel Fuel System

Applies To All Models

COMPONENT INDEX	Page
COLD STARTING SYSTEMS	
Description	03-03
FUEL FILTER ELEMENT	
Installation	03-05
Removal	03-05
FUEL INJECTORS	
Adjustment	03-05
NH – Series	
Installation	03-06
Removal	03-06
NHC, NHCT and NTC – Series	
Installation	03-07
Removal	03-07
Timing	03-05
FUEL PUMP ASSEMBLY	
Adjustment	03-04

COMPONENT INDEX	Page
FUEL PUMP ASSEMBLY - Continued	
Installation	03-06
Removal	03-06
FUEL PUMP SCREEN	
Installation	03-06
Removal	03-06
FUEL SYSTEM	
Description	03-01
IDLE SPEED ADJUSTMENTS	03-05
REAR THROTTLE SCREW ADJUSTMENT	03-05
SPECIFICATIONS	03-08
THROTTLE LEAKAGE ADJUSTMENT	03-05

DESCRIPTION

This part provides information for in-vehicle service of Ford Diesel Trucks euipped with Cummins NH Series Diesel engines.

Overhaul procedures, replacement procedures, test stand procedures, specifications and wear limits are covered in **the Cummins H and NH Engine shop Manual and the Truck and Bus Diesels Maintenance Manual.**

FUEL SYSTEM

The PT fuel system delivers fuel to each cylinder of the engine in equal, predetermined amounts. Thus PT is an abbreviation for pressure-time. The fuel system consists of the supply tank(s), fuel filter, fuel pump, governor, injectors, fuel shutoff valve, and the fuel supply and drain lines (Figs. 1 and 2).

The fuel pump is coupled to the air compressor which is driven from the engine gear train. The fuel pump main shaft turns at engine crankshaft speed, and drives the gear pump, governor and tachometer shaft.

The fuel pump consists of a gear pump which draws fuel from the supply tank and delivers it to the injectors under pressure, and a governor and throttle which controls fuel pressure to the injectors. A pulsation damper prolongs gear pump life. It smoothes the flow of fuel through the pump.

The gear pump receives fuel from the supply tank and pumps the fuel under pressure, varying with engine speed, through the filter screen and governor to the throttle and to the injectors. The filter screen, mounted in the top of the fuel pump, prevents damage to the fuel pump and injectors by filtering from the fuel any foreign particles that may be present. To provide fuel pump cooling a small amount of fuel is bled from the fuel pump and returned to the fuel tank. Thus, a circulation of cooling fuel is provided.

At idle speed, the main throttle shaft passage is closed, allowing fuel flow around the throttle shaft to the idle port in the governor barrel. At engine speeds above idle, the fuel flows through the main throttle shaft hole and enters the main fuel port in the governor barrel.

When the throttle lever is moved to the idle position and the vehicle is moving in excess of idle speed, a small amount of throttle leakage is provided to purge the injectors of air. The PT fuel pump governor controls both idle and high speed. On the NH-Series engines, the fuel manifold is a tube mounted externally on the engine, with equal length branches (tubing) to the injectors. On the NHC, NHCT and NTC engines, the manifolds are drilled passages, one in each cylinder head, which are each aligned with an annulus in the injector body. These fuel manifolds are connected to the pressure side of the fuel pump by a common fuel line.

Fuel circulates through the injector at all times, except for a short period following injection into the cylinder. From the inlet, fuel flows down the inlet passage of the injector, around the injector plunger, between the body end and cup, up the drain passage to the drain connections and manifold and back to the supply tank.

As the plunger comes up, the injector feed passage is opened and fuel flows through the metering orifice into the cup. At the same time, fuel flows past the cup and out the drain orifice. The amount of fuel which enters the cup is controlled by the fuel pressure against the metering orifice. Fuel pressure is controlled by the fuel pump.

The plunger, during injection, comes down until the metering orifice is closed and the fuel in the cup is injected

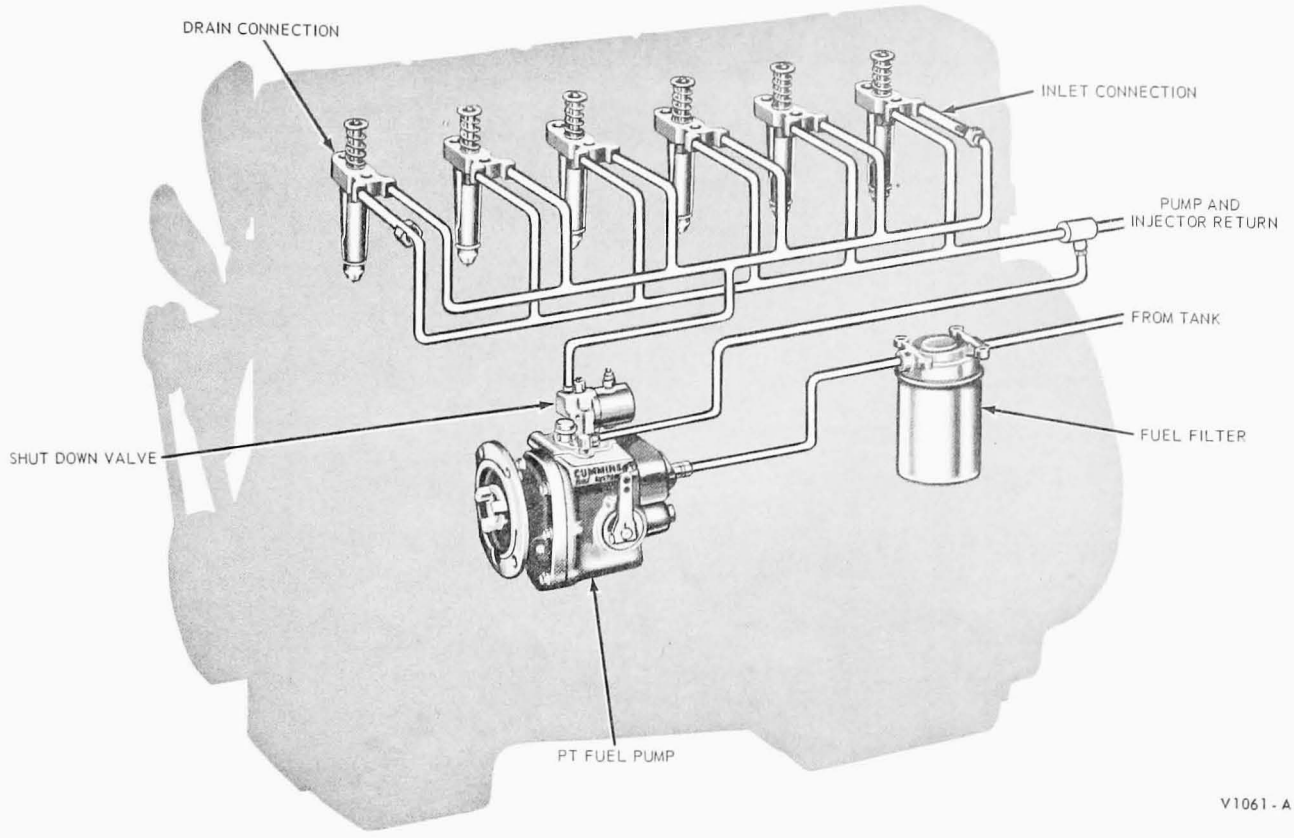

FIG. 1 NH-Series Engine Fuel System

into the cylinder. While the plunger is seated in the cup, all fuel flow in the injector is stopped.

On the NH-Series engines a flanged injector (Fig. 3) is used. The fuel manifold is connected to the inlet port of the injector flange. A removable inlet screen is installed in each inlet port for final fuel filtration. The drain port is located adjacent to the inlet port. The drain ports are connected by a drain manifold to return surplus fuel to the supply tank.

The NHC, NHCT and NTC engines utilize a cylindrical injector (Fig. 3). Two radial grooves (annuli) on the injector body index with two drilled passages in each cylinder head, which serve as fuel inlet and drain manifolds. The inlet annulus contains a fine mesh screen for final fuel filtration. A fuel crossover drain tube, at the flywheel end of the engine, connects the two cylinder head drain passages and a common line returns the unused fuel to the fuel tank.

The fuel grooves around the cylindrical injectors are separated by O-rings which seal against the cylinder head injector bore forming a leak proof passage between the injectors and the cylinder head injector bore surface. The injectors contain an orifice plug which

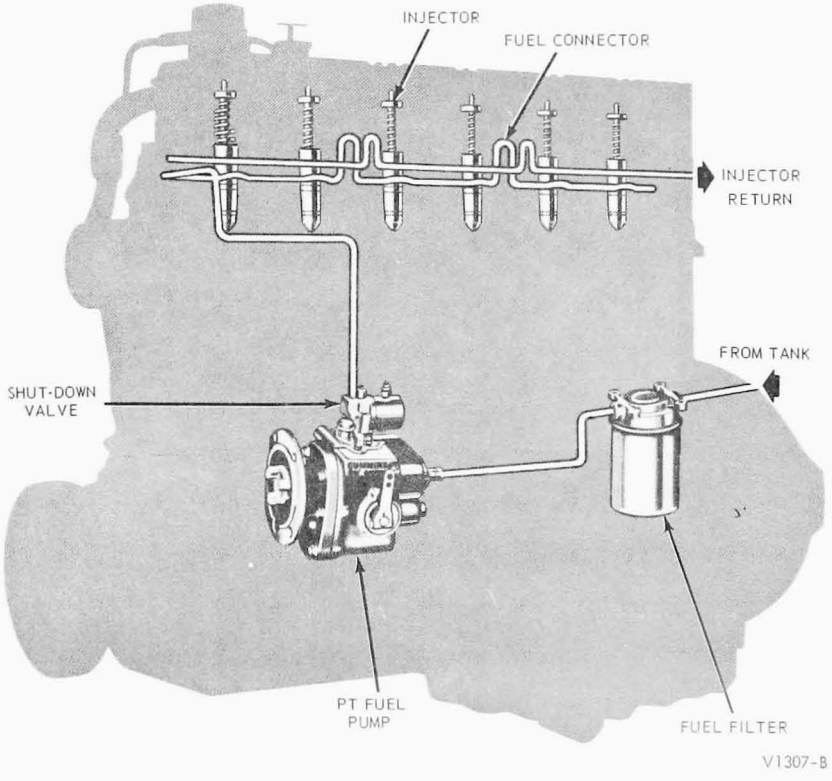

FIG. 2 NHC, NHCT and NTC-Series Engine Fuel System

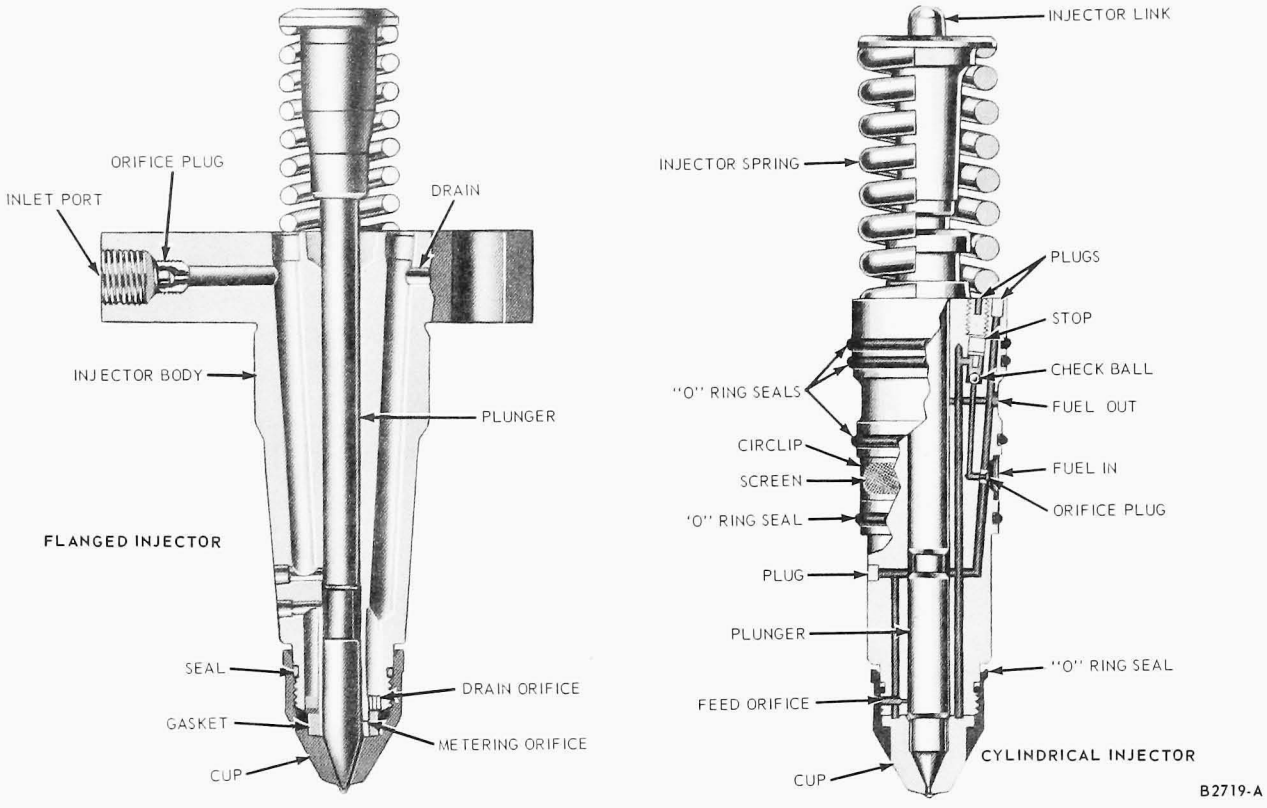

FIG. 3 Flanged and Cylindrical Injector

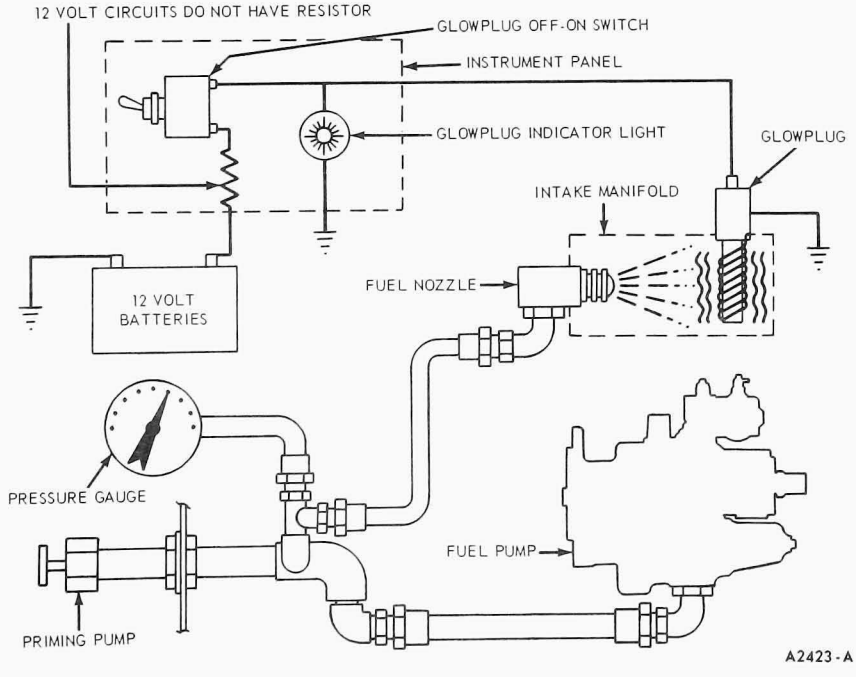

FIG. 4 Preheater Operation

can be varied in inside diameter to achieve identical fuel delivery through all injectors.

COLD STARTING SYSTEMS

To assist in cold weather starting, various systems are available. The preheater consists of a glow plug which is electrically heated by the battery and a hand priming pump which sprays fuel into the intake manifold. The fuel burning in the manifold heats the intake air. Fig. 4 shows the preheater operation. **Never use ether when using the preheater.**

Another cold weather starting aid is the ether quick-start, measured-shot system. This system consists of an ether tank and a manually controlled metering valve or quick start choke to inject shots of ether into the intake manifold. A typical installation is shown in Fig. 5.

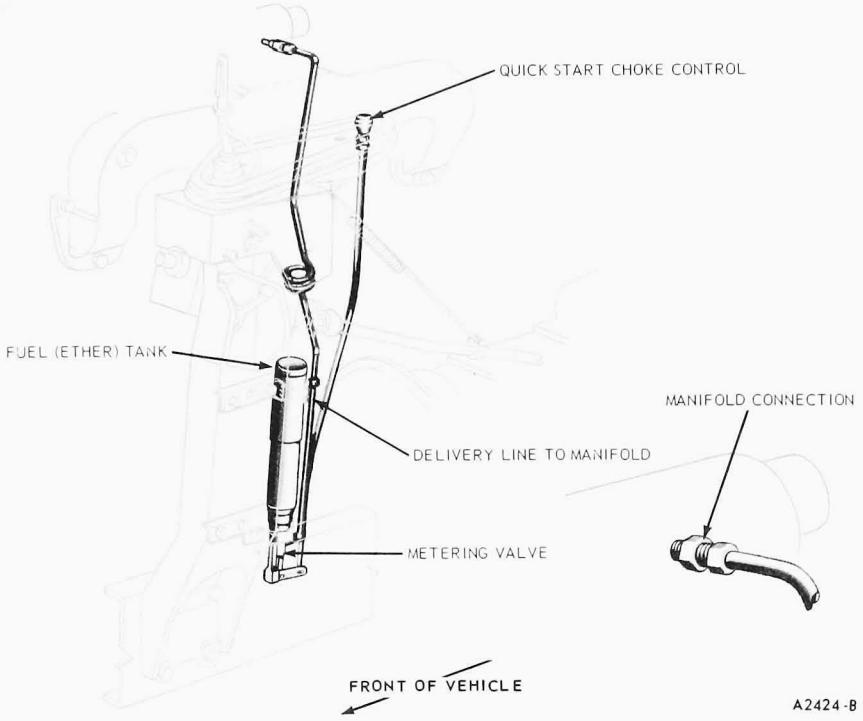

FIG. 5 Ether Quick Start Unit

ADJUSTMENTS

FUEL PUMP ADJUSTMENT

Only those fuel pump adjustments described herein should be performed in the truck. Make the adjustments in the order given.

In-chassis adjustments of the fuel pump are based on fuel manifold pressure and fuel supply vacuum.

The following adjustment procedures should be performed before adjusting the forward throttle screw and rear throttle screw. The forward throttle screw is closer to the drive end of the fuel pump (Fig. 6).

1. Operate the engine until the oil temperature reaches 140 to 160 degrees F. Make all fuel pump or injector settings on a hot engine.
2. Determine the fuel manifold pressure and fuel supply pressure by snap reading which provides a method of finding maximum fuel manifold pressure and fuel supply vacuum without a dynamometer. Obtain manifold pressure and fuel supply vacuum readings when the engine is at full load and rated speed. **When the engine is accelerated to full throttle, full engine load is**

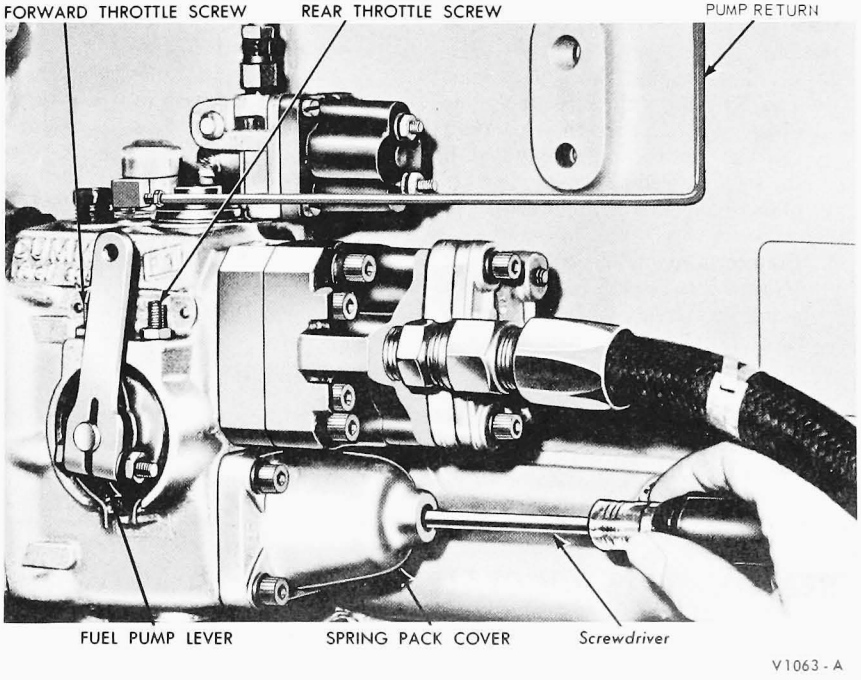

FIG. 6 Fuel Pump Adjustments

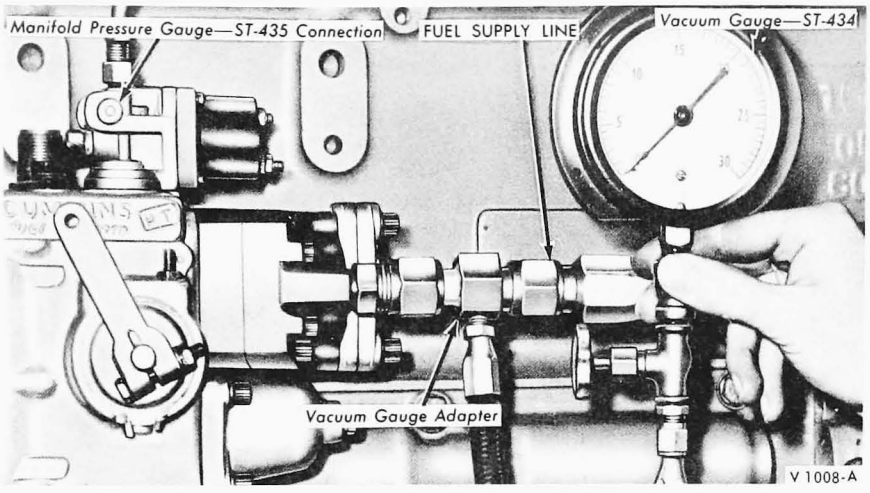

FIG. 7 Fuel Pump Gauge Connections

momentarily attained when the engine reaches rated speed. Fuel pressure and vacuum gauge readings increase with engine speed until rated speed is reached. At this point the gauge hand hesitates and falls off due to governor action at speeds above rated speed. It is necessary to read the maximum swing of the pressure gauge hand quickly. The snap reading technique is not as accurate as measurements obtained with a dynamometer.

Snap reading gives an indication of fuel manifold pressure and fuel supply vacuum. **For a more dependable reading, use the average of five snap readings.**

3. Install a vacuum gauge (Cummins Tool ST-434) in the fuel supply line (Fig. 7). Check the suction restriction of the fuel supply line. If the vacuum reading exceeds 8 inches of mercury, determine the cause and correct.
4. Connect a manifold pressure gauge (Cummins Tool ST-435) at the manifold pressure gauge connection (Fig. 7). Check the fuel manifold pressure at rated speed and full load. If the manifold pressure is not within specifications, correct as necessary.
5. Adjust valve and injector lash to specifications.
6. Check high-idle or maximum governed speed.

REAR THROTTLE SCREW ADJUSTMENT

1. Connect a manifold pressure gauge (Cummins ST-435) at the manifold pressure gauge connection (Fig. 7). Check the fuel manifold pressure at rated speed and full load.
2. Turn the rear throttle screw out until the highest fuel manifold pressure reading is obtained.
3. Turn the rear throttle screw in to reduce the fuel manifold pressure 5 psi.

Do not increase the rear throttle adjustment more than 5 psi or the engine speed at which peak torque occurs will change. Throttle restriction over 5 psi allows unauthorized adjustment to raise fuel manifold pressure, thereby overfueling the engine.

THROTTLE LEAKAGE ADJUSTMENT

1. With the engine operating at idle speed, turn in the forward throttle screw until the engine gains speed. Back the screw out two full turns.
2. Stop the engine and remove the spring pack cover plug and adjust the idle governor screw (Fig. 6) to idle the engine at specified rpm (see specifications).
3. Operate the engine until it is purged of the air let in during step 2.
4. Check the idle speed.
5. Check deceleration; if it is too slow, the throttle leakage is excessive. If the engine falters or dies when idle speed is reached, the throttle leakage is too low. Adjust the screw to obtain permissible deceleration time.
6. Any change in the desired idle speed is made with the governor idle screw. Follow the sequence under Idle Speed Adjustments.

IDLE SPEED ADJUSTMENTS

1. With the engine stopped, remove the pipe plug from the spring pack cover.
2. The idle adjustment screw is held in position with a spring clip. Turn the screw in to increase or out to decrease the speed (Fig. 6).
3. Replace the pipe plug. With the engine running, air which collected in the spring pack housing will cause a rough idle temporarily. This will stabilize when the housing fills with fuel.

INJECTOR TIMING

Refer to Engine timing in the Cummins H-and NH-Engine Shop Manual.

INJECTOR ADJUSTMENT

Refer to Injector and Valve Adjustment in the Cummins H-and NH-Engine Shop Manual.

REMOVAL AND INSTALLATION

FUEL FILTER ELEMENT

The fuel filter (Fig. 8) has a disposable-type element. Replace it at the specified interval, even though it may appear serviceable. Unscrew the combination filter case and element and discard it. Install the new filter case and element assembly and tighten it by hand until the O-ring seal touches the filter head. Then tighten it an additional 1/4 to 1/2 turn by hand. **If the replacement filter does not have an integral O-ring seal, use a new O-ring for installation.**

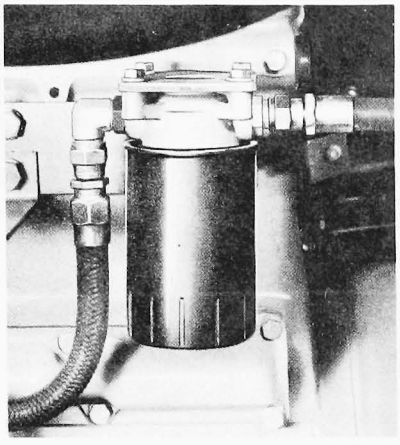

V1065-A

FIG. 8 Typical Engine Mounted Fuel Filter

FUEL PUMP SCREEN

Removal

1. Remove the retainer cap from the fuel pump. Remove the spring and lift out the filter screen assembly (Fig. 9).
2. Remove the top screen retainer from the filter screen assembly. Wash the screen and magnet in cleaning solvent and dry with compressed air. Install the top screen retainer.

Installation

1. Install the filter screen, **with the hole down,** in the fuel pump.
2. Install the spring and retainer cap. Torque the retainer cap to specifications.

FUEL PUMP ASSEMBLY

Removal

1. Disconnect the accelerator return spring. Disconnect the hand throttle control, tachometer cable and accelerator rod at the fuel pump.

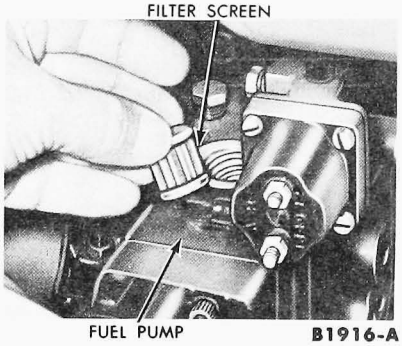

FIG. 9 Removing Fuel Pump Filter Screen

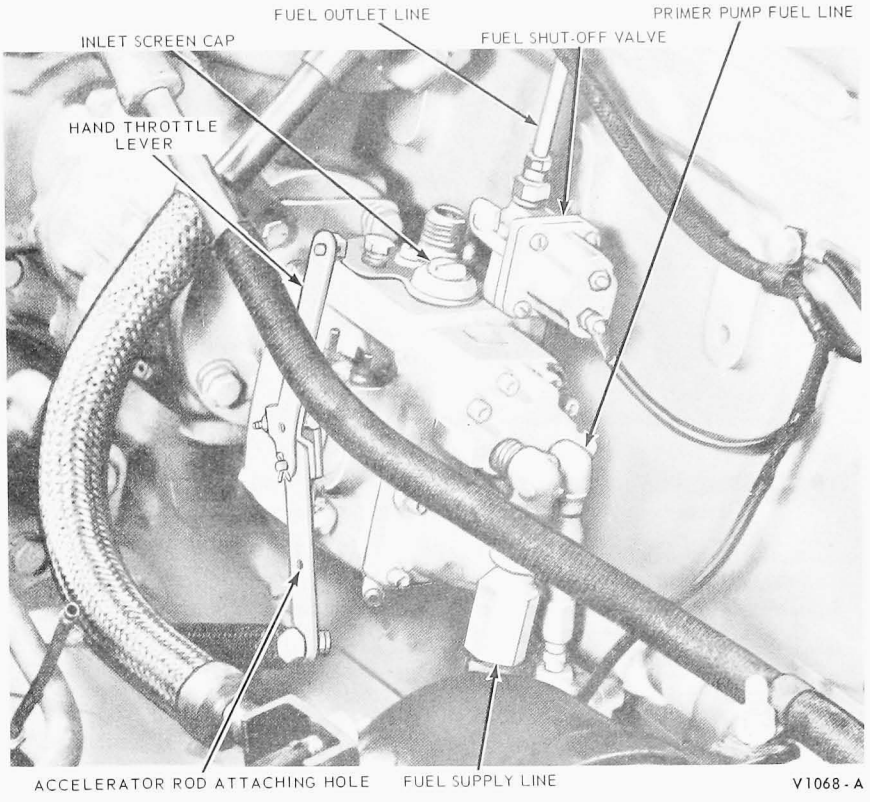

FIG. 10 Typical Fuel Pump Installation

Disconnect the lead to the fuel shut-off valve.

2. Disconnect the primer fuel pump line and fuel supply line at the fuel pump (Fig. 10). Remove the fuel outlet line from the shut-off valve and fuel manifold. Disconnect the fuel bleed line.
3. Remove the fuel pump mounting bolts. Remove the fuel pump, gasket and pump drive rubber buffer.

Installation

1. Clean the gasket surfaces of the fuel pump and air compressor.
2. Install the pump drive rubber buffer. Position a new fuel pump gasket on the air compressor and install the fuel pump. Torque the mounting bolts to specifications.
3. Connect the primer fuel pump line and fuel supply line to the fuel pump (Fig. 10). Connect the fuel outlet line to the fuel manifold and fuel shut-off valve. Connect the fuel bleed line.
4. Connect the accelerator rod, hand throttle control and tachometer cable to the fuel pump. Connect the fuel shut-off valve lead. Connect the accelerator return spring.
5. Check the accelerator linkage and adjust if necessary.
6. Start the engine and check for leaks.

FUEL INJECTORS

NH-SERIES ENGINES

Removal

1. Refer to Part 22-03, Rocker Housing Cover Removal, and remove the rocker housing cover(s).
2. Disconnect the fuel manifold and fuel return line from the injector inlet and drain connections. Remove the fuel inlet screen (Fig. 11). Remove the fuel inlet and drain connections from the injector (Fig. 12).
3. Loosen the injector rocker lever lock nut and unscrew the adjusting screw until the push rod can be disengaged. Disengage the push rod and tip the rocker lever away from the injector.
4. Remove the injector retaining screws and lift the injector from the cylinder head. **Do not bruise the injector tip. Do not turn the injector bottom side up or the plunger will fall out. Leave the plunger in the injector as the plungers are not interchangeable.**

Installation

1. Insert the injector in the cylinder head. **Be sure the plunger is positioned with the plunger class**

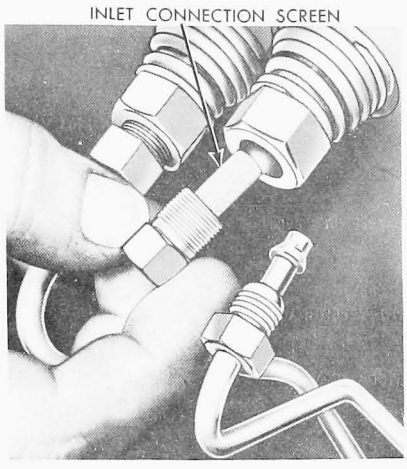

FIG. 11 Removing Injector Inlet Screen

mark centered between the inlet and drain connections.

2. Lubricate the retaining screw threads. Start, **but do not tighten,** the retaining screws. Align the injector by installing the inlet and drain connections 2 turns in the injector (Fig. 12). Torque the retaining screws alternately to specifications.
3. Torque the inlet and drain connections to specifications. Install

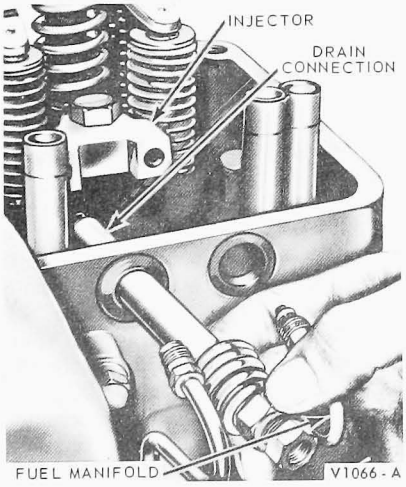

FIG. 12 Injector Fuel Inlet and Drain Connections

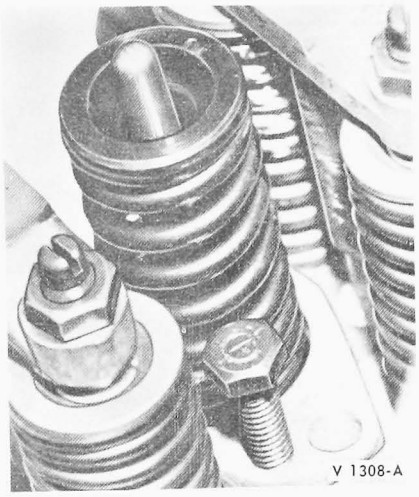

FIG. 13 Removing Cylindrical Injector

the fuel inlet screen (Fig. 13) and connect the fuel manifold and fuel return line.

4. Position the push rod under the rocker lever and adjust the injector rocker lever lash to specifications.
5. Refer to Part 22-03, Rocker Housing Cover Installation, and install the rocker housing cover(s). Partially tighten the cover screws.
6. Operate the engine until the oil temperature is 140 degrees F and adjust the injector lash to specifications.

NHC, NHCT AND NTC ENGINES

Removal

1. Refer to Part 22-03, Rocker Housing Removal and remove the rocker housing cover.
2. Remove capscrews from the injector hold down plate.
3. Loosen the lock nut and backoff the injector rocker lever adjusting screw until the push rod can be disengaged. Hold the push rod aside and tip the rocker lever away from the injector to clear the injector link.
4. Insert one capscrew in the tapped hole in the injector hold down plate and jack the injector from the head (Fig. 13). Remove the O-rings.

Avoid bruising the injector tip. do not turn the injector upside down as the plunger might fall out. Injector plungers are not interchangeable.

Installation

1. Clean the injector sleeve with cloth wrapped around a wooden stick.
2. Lubricate the injector body O-rings with Lubriplate. Lubricating oil or fuel oil is not adequate. **The O-rings should receive a fresh coat of Lubriplate each time the injectors are installed in the head.**
3. Start the injector into bore; guide by hand until injector is aligned in bore and not binding in any manner. **When installing injector from intake side of engine, injectors are to be placed with ball check retainer plug at one o'clock.**
4. Place a hammer handle butt on top of injector plunger guide, and **seat injector by giving a quick hard push on the hammer. A snap** should be heard and felt as the cup seats in the copper sleeve.
5. Place the hold-down plate over the injector body with the counterbore up; position half-collet locking clamps in injector body groove. Start the hold-down capscrews. **Do not tighten.**
6. With clamps centered, place injector spring on hold-down plate with closed end down. **Spring must seat on hold-down plate. If spring sits on locking clamps, incorrect injector adjustment will result causing push rod lobe and camshaft damage.**
7. Holding the injector spring in position, carefully insert the injector plunger. **Position plunger in injector bore with class mark on the plunger (midway between inlet and drain ports of injector). This will provide the same operating position in which the injector was calibrated.**
8. Torque the hold-down capscrews in alternate steps to specifications.
9. Position the injector rocker lever on the injector push tube.
10. Adjust the injectors and valves.
11. Install the rocker housing cover following procedures under Rocker Housing Installation in Part 22-03.

SPECIFICATIONS

CUMMINS DIESEL ENGINE ADJUSTMENT SETTINGS AND TORQUE LIMITS

Specifications for overhaul of the fuel system components are included in the Cummins N-NH-Series Engine Overhaul Manuals.	
Injector Installed Position – Cylindrical Injector	
Ball check retainer plug at one o'clock position and class fit mark at 7 o'clock as viewed from left side of engine	
Valve Crosshead to Valve Spring Retainer Clearance	
Minimum	0.025
Valve Clearance Adjustment	
NH, NHC, NHCT and NTC-Series Engines	
Intake - Cold (70°F Engine Oil Temperature	0.016
Hot (140°F Engine Oil Temperature)	0.014
Exhaust - Cold (70°F Engine Oil Temperature)	0.029
Hot (140°F Engine Oil Temperature)	0.027
Injector Adjustment Screw Setting	
Cold (70°F Engine Oil Temperature)	48 inch lbs.
Hot (140°F Engine Oil Temperature)	60 inch lbs.
Injector Adjustment Screw Lock Nut Setting	
NH, NHC, NHCT and NTC – Series Engines	50-60 ft-lbs.
Valve Crosshead Adjustment Lock Nut Setting	25-30 ft-lbs.
Injector Hold-Down Clamp to Cylinder Head	
Flange Type (Less Nylock Insert)	10-12 ft-lbs.
Flange Type (With Nylock Insert)	12-14 ft-lbs.
Cylindrical Type (With Nylock Insert)	7-8 ft-lbs.
Fuel Pump Filter Screen	20-25 ft-lbs.
Fuel Inlet and Drain Connectors	
NH-Series Engines	20-25 ft-lbs.

CUMMINS DIESEL ENGINE TORQUE LIMITS FOR VARIOUS SIZE BOLTS

If any of the torque limits in the following table disagree with those listed in the preceding tables, the limits in the preceding tables prevail.

Size	Ft. Lbs.	Size	Ft. Lbs.	Size	Ft. Lbs.	Size	Ft. Lbs.
1/4–20	6-9	7/16–14	45-50	5/16–24	15-18	1/2–20	70-80
1/4–28	6-9	7/16–20	50-60	3/8–16	23-28	9/16–16	85-95
5/16–18	12-15	1/2–13	60-70	3/8–24	30-35	5/8–18	130-145

CV1155-A

PART 25-04 Detroit Diesel Fuel System

GENERAL INFORMATION

All adjustment, removal and installation and repair operations should be performed by authorized Detroit Diesel Engine Dealers. When Ford Truck Dealer personnel are trained and authorized to service Detroit Diesel engines, they may perform adjustment and repair operations.

Ford truck dealers may do minor maintenance operations on Detroit Diesel engines such as change fuel filter and fuel strainer elements and adjust accelerator linkage (Part 25-60).

A schematic diagram of the Detroit Diesel engine fuel system is shown in Fig. 1. The gear-type fuel pump supplies fuel under pressure to the inlet fuel manifold in each cylinder head. The inlet side of each injector is connected by piping to the fuel manifolds. The needle valve injectors, one for each cylinder, increase the fuel pressure, meter the amount of fuel and inject it into each combustion chamber. A limiting-speed governor controls the metering capacity of the injectors to regulate engine speed.

Surplus fuel, not used by the injector, and fuel used to cool the injector parts is piped to the fuel return manifold and flows back to the supply tank. A restriction in the fuel return line maintains the fuel system pressure.

The fuel strainer and fuel filter (Fig. 2) remove impurities from the fuel. The fuel strainer, located between the fuel pump and supply tank, has a replaceable element of 30 micron capacity. The 10-micron-capacity, replaceable-element fuel filter is incorporated in the fuel system between the fuel pump and fuel inlet manifold.

A drain cock is provided at the bottom of the fuel strainer and fuel filter to facilitate the removal of accumulated sediment and water.

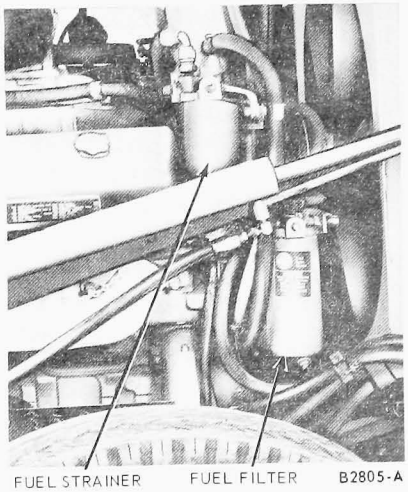

FIG. 2 Detroit Diesel Fuel Filters—W-Series Trucks

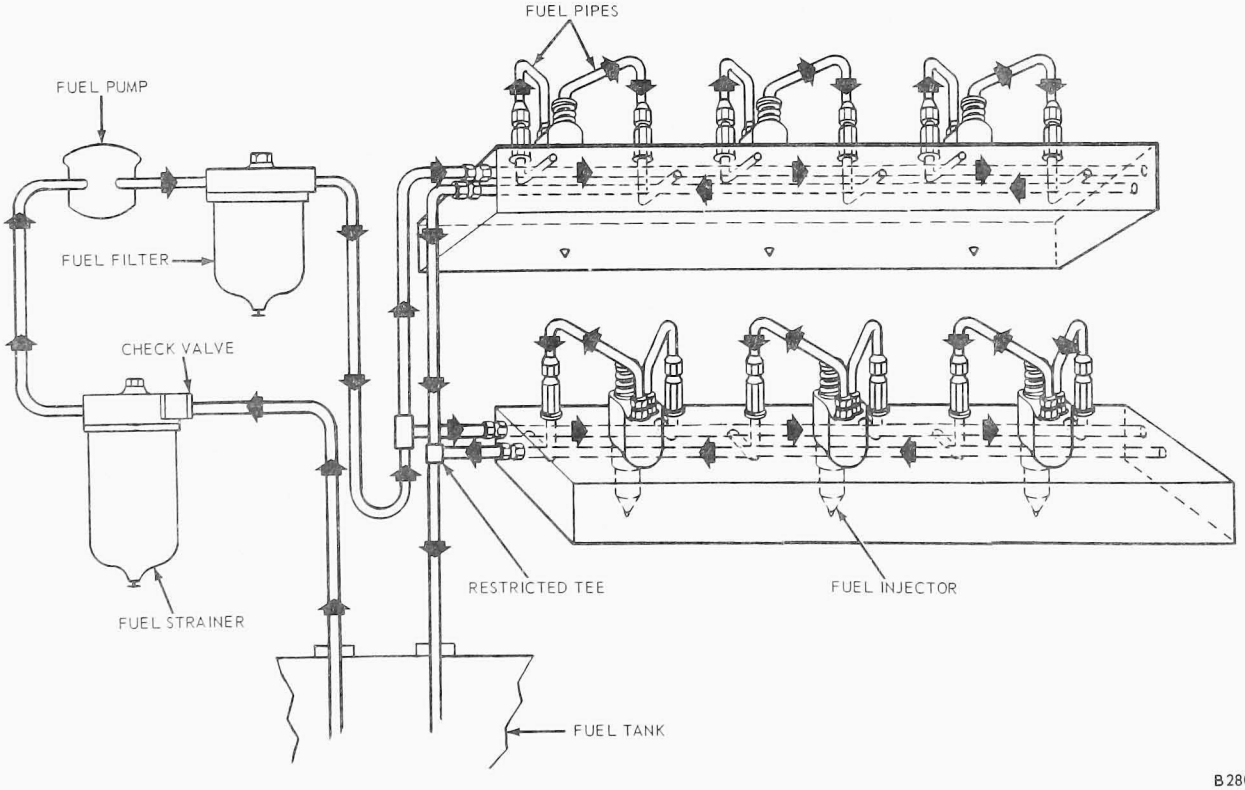

FIG. 1 Detroit Diesel Engine Fuel System Schematic

PART 25-30 Lift Pumps

Applies To All Models

COMPONENT INDEX	Page	COMPONENT INDEX	Page
LIFT PUMPS		MODELS 6V-53, 6-71N and 8V-71	
NH Series		Description	30-01
Adjustment	30-01	Removal and Installation	30-03
Description	30-01	MODELS 1140, 1145, 1150 and 1160	
Lift Pump Screen	30-03	Description	30-01
Removal and Installation	30-03	Removal and Installation	30-03
		SPECIFICATIONS	30-04

DESCRIPTION

LIFT PUMPS

Ford V-8 Lift Pump

A mechanically operated diaphragm type lift pump is used to draw fuel from the supply tank to the multi-plunger injection pump. The lift pump is mounted directly to the side of the fuel injection pump housing and is actuated by an arm riding on an eccentric on the camshaft. A two-stage fuel filter is placed on the pressure side of the pump. Since the filter is located on the pressure side, the possibility of air induction into the fuel system is eliminated.

Cummins Diesel Lift Pump

The lift pump is coupled to the air compressor which is driven from the engine gear train. The lift pump main shaft turns at engine crankshaft speed, and drives the gear pump, governor and tachometer shaft.

The lift pump consists of a gear pump to draw fuel from the supply tank and deliver it to the injectors under pressure, and a governor and throttle to control fuel pressure to the injectors. A pulsation damper prolongs gear pump life, as it smoothes the flow of fuel through the pump.

The gear pump receives fuel from the supply tank and pumps the fuel under pressure, varying with engine speed, through the filter screen and governor to the throttle and to the injectors. The filter screen, mounted in the top of the lift pump, prevents damage to the pump and injectors by filtering from the fuel any foreign particles that may be present. To provide lift pump cooling a small amount of fuel is bled from the fuel pump and returned to the fuel tank. Thus, a circulation of cooling fuel is provided.

Detroit Diesel Lift Pump

The positive displacement gear type fuel pump transfers the fuel from the fuel tank to the fuel injectors. The pump circulates an excess supply of fuel through the injectors, which purges the air from the system and cools the injectors. The unused portion of the fuel returns to the fuel tank through the fuel return manifold and fuel return line.

The pump is attached to the rear end plate cover of the blower assembly and is driven off the end of the lower blower rotor by a drive coupling fork attached to the end of the pump drive shaft and a drive disc attached to the blower rotor.

ADJUSTMENTS

The only adjustments that can be performed are on the Cummins Diesel lift pump.

LIFT PUMP

Cummins Diesel

Only those fuel pump adjustments described herein should be performed in the truck. Make the adjustments in the order given.

In-chassis adjustments of the fuel pump are based on fuel manifold pressure and fuel supply vacuum.

The following adjustment procedures should be performed before adjusting the forward throttle screw and rear throttle screw. The forward throttle screw is closer to the drive end of the fuel pump (Fig. 1).

1. Operate the engine until the oil temperature reaches 140 degrees to 160 degrees F. Make all fuel pump or injector settings on a hot engine.
2. Determine the fuel manifold pressure and fuel supply pressure by snap reading which provides a method of finding maximum fuel manifold pressure and fuel supply vacuum without a dynamometer. Obtain manifold pressure and fuel supply vacuum readings when the

engine is at full load and rated speed. **When the engine is accelerated to full throttle, full engine load is momentarily attained when the engine reaches rated speed.** Fuel pressure and vacuum gauge readings increase with engine speed until rated speed is reached. At this point the gauge hand hesitates and falls off due to governor action at speeds above rated speed. It is necessary to read the maximum swing of the pressure gauge hand quickly. The snap reading technique is not as accurate as measurements obtained with a dynamometer.

Snap reading gives an indication of fuel manifold pressure and fuel supply vacuum. **For a more dependable reading, use the average of five snap readings.**

3. Install a vacuum gauge (Cummins Tool ST-434) in the fuel supply line (Fig. 2). Check the suction restriction of the fuel supply line. If the vacuum reading exceeds 8 inches of mercury, determine the cause and correct.
4. Connect a manifold pressure gauge (Cummins Tool ST-435) at the manifold pressure gauge connection. Check the fuel manifold pressure at rated speed and full load. If the manifold pressure is not within specifications, correct as necessary.
5. Adjust valve and injector lash to specifications.
6. Check high-idle or maximum governed speed.

REAR THROTTLE SCREW ADJUSTMENT

1. Connect a manifold pressure gauge (Cummins ST-435) at the manifold pressure gauge connection (Fig. 2). Check the fuel manifold pressure at rated speed and full load.
2. Turn the rear throttle screw out until the highest fuel manifold pressure reading is obtained.
3. Turn the rear throttle screw in to reduce the fuel manifold pressure 5 psi.

Do not increase the rear throttle adjustment more than 5 psi or the engine speed at which peak torque occurs will change. Throttle restriction over 5 psi allows unauthorized adjustment to raise fuel manifold pressure, thereby overfueling the engine.

FORWARD THROTTLE SCREW OR THROTTLE LEAKAGE ADJUSTMENT

1. With the engine operating at idle speed, turn in the forward throttle screw until the engine gains speed. Back the screw out two full turns.

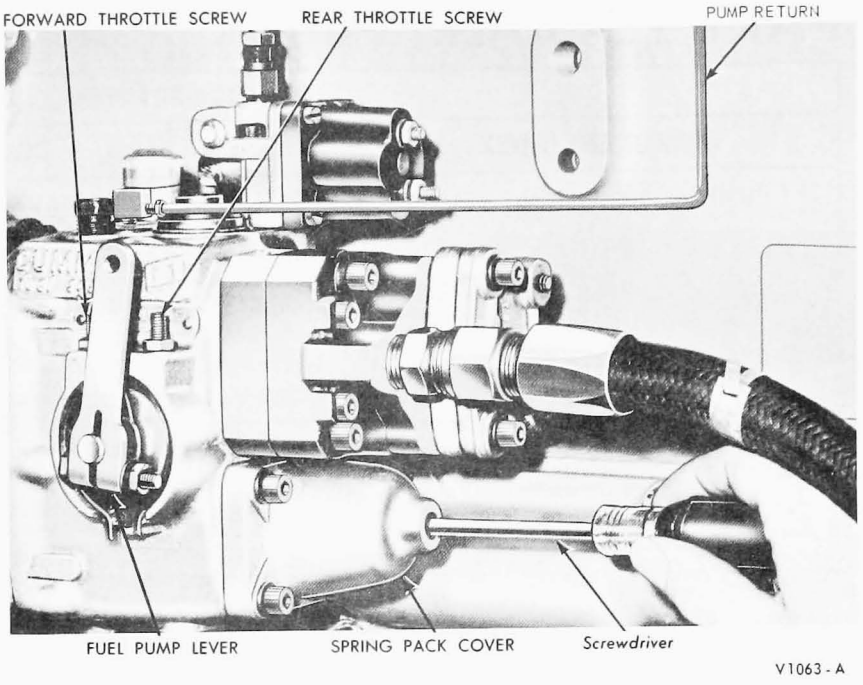

FIG. 1 Fuel Pump Adjustments

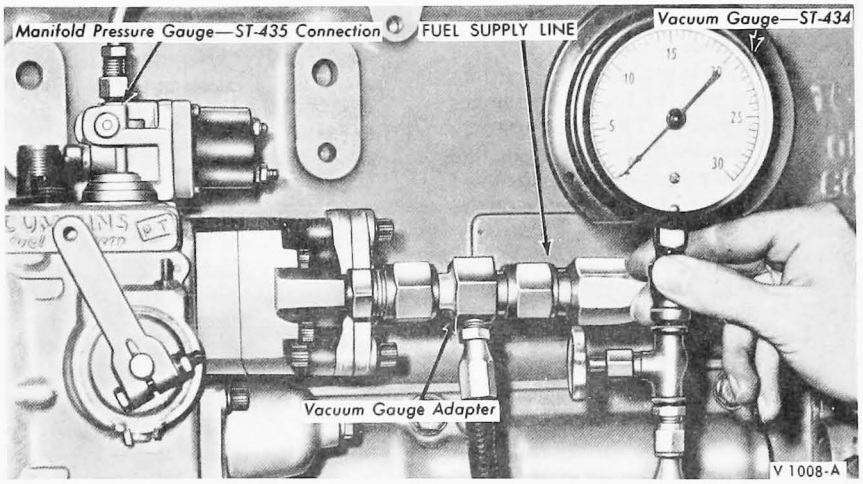

FIG. 2 Fuel Pump Gauge Connections

2. Stop the engine and remove the spring pack cover plug and adjust the idle governor screw (Fig. 1) to idle the engine at specified rpm (see specifications).
3. Operate the engine until it is purged of the air let in during Step 2.
4. Check the idle speed.
5. Check the deceleration; if it is too slow, the throttle leakage is excessive. If the engine falters or dies when idle speed is reached, the throttle leakage is too low. Adjust the screw to obtain permissible deceleration time.
6. Any change in the desired idle speed is made with the governor idle screw. Follow the sequence under Idle Speed Adjustments.

IDLE SPEED ADJUSTMENTS

1. With the engine stopped remove the pipe plug from the spring pack cover.
2. The idle adjustment screw is held in position with a spring clip. Turn the screw in to increase, or out to decrease the speed (Fig. 1).
3. Replace the pipe plug. With the engine running, air which collected in the spring pack housing will cause a rough idle temporarily. This will stabilize when the housing fills with fuel.

REMOVAL AND INSTALLATION

LIFT PUMP

CUMMINS DIESEL

Removal

1. Disconnect the accelerator return spring. Disconnect the hand throttle control, tachometer cable and accelerator rod at the fuel pump. Disconnect the lead to the fuel shut-off valve.
2. Disconnect the primer fuel pump line and fuel supply line at the fuel pump (Fig. 3). Remove the fuel outlet line from the shut-off valve and fuel manifold. Disconnect the fuel bleed line.
3. Remove the fuel pump mounting bolts. Remove the fuel pump, gasket and pump drive rubber buffer.

Installation

1. Clean the gasket surfaces of the fuel pump and air compressor.
2. Install the pump drive rubber buffer. Position a new fuel pump gasket on the air compressor and install the fuel pump. Torque the mounting bolts to specifications.
3. Connect the primer fuel pump line and fuel supply line to the fuel pump (Fig. 3). Connect the fuel outlet line to the fuel manifold and fuel shut-off valve. Connect the fuel bleed line.
4. Connect the accelerator rod, hand throttle control and tachometer cable to the fuel pump. Connect the fuel shut-off valve lead. Connect the accelerator return spring.
5. Check the accelerator linkage and adjust if necessary.
6. Start the engine and check for leaks.

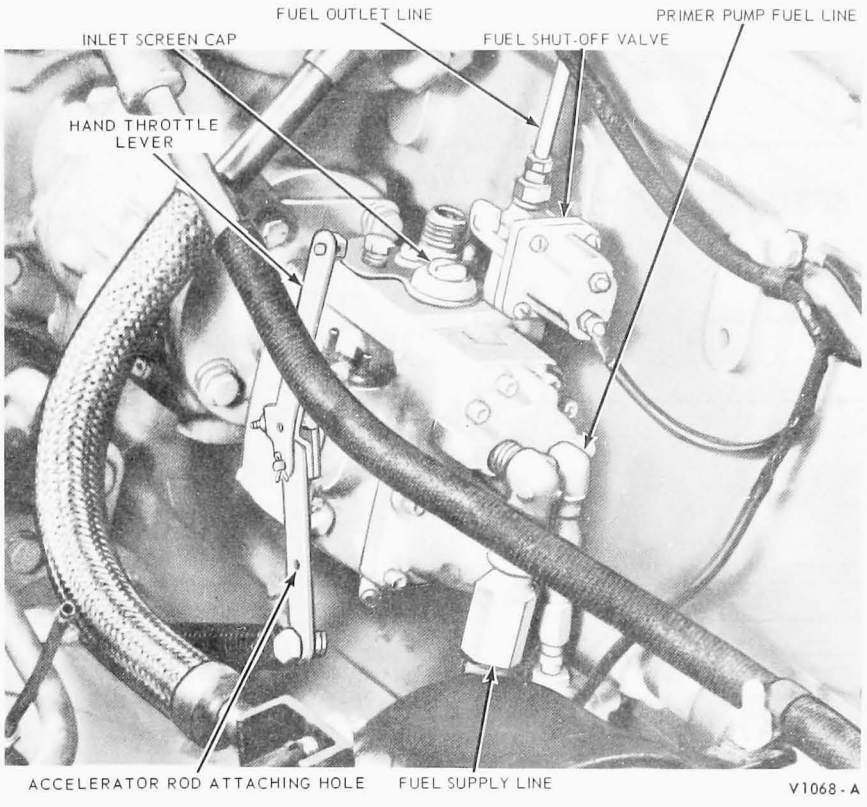

FIG. 3 Typical Lift Pump Installation

DETROIT DIESEL

Removal

1. Disconnect the fuel inlet and outlet lines at the fuel pump.
2. Disconnect the drain tube, if used.
3. Remove the three pump attaching bolt and seal assemblies, using wrench J-4242, and withdraw the pump from the blower end plate cover.
4. Check the drive coupling fork and, if broken or worn, replace it with a new coupling.

Installation

1. Affix a new gasket to the pump body mounting flange and locate the pump drive coupling fork over the squared end of the drive shaft, with the prongs of the fork directed away from the pump.
2. Place the fuel pump against the blower cover with the prongs of the drive coupling fork in registration with the slots in the drive disc on the blower rotor shaft.
3. Secure the pump to the blower cover with three bolt and seal washer assemblies.
4. Connect the inlet and outlet fuel tubes to the fuel pump.

FORD V-8 DIESEL

Removal

1. Disconnect the inlet and the outlet fuel lines from the pump (Fig. 4).
2. Remove the two attaching bolts, then lift the pump from the engine.

Installation

1. Clean the pump mounting surface on the engine and the pump.
2. Position the pump and new gasket so that the arm is contacting and properly centered on the fuel injection pump camshaft lobe. Install and tighten the attaching bolts to specifications.
3. Connect the fuel inlet and outlet lines to the lift pump (Fig. 4).

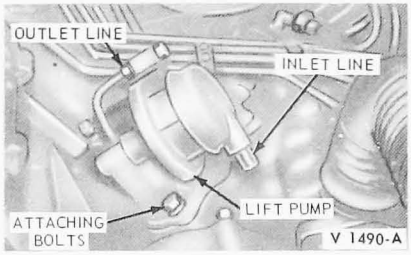

FIG. 4 Lift Pump Installed

LIFT PUMP SCREEN

Cummins Diesel

Removal

1. Remove the retainer cap from the

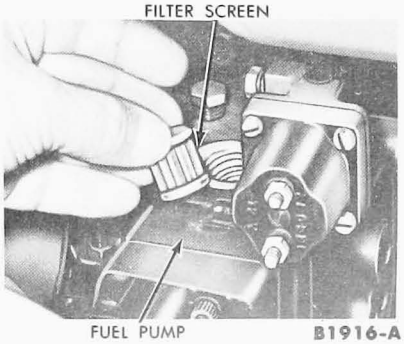

FIG. 5 Removing or Installing Lift Pump Filter Screen

fuel pump. Remove the spring and lift out the filter screen assembly (Fig. 5).

2. Remove the top screen retainer from the filter screen assembly. Wash the screen and magnet in cleaning solvent and dry with compressed air. Install the top screen retainer.

Installation

1. Install the filter screen, **with the hole down,** in the fuel pump.
2. Install the spring and retainer cap. Torque the retainer cap to specifications.

SPECIFICATIONS

NH SERIES ENGINE

Item	Ft-Lbs Torque	Item	Ft-Lbs Torque
Fuel Pump Filter Screen	20-25	Fuel Inlet and Drain Connectors	20-25

TORQUE LIMITS FOR VARIOUS SIZE BOLTS – ALL ENGINES

If any of the torque limits in the following table disagree with those listed in the preceding table, the limits in the preceding table prevail.							
Size	Ft-Lbs	Size	Ft-Lbs	Size	Ft-Lbs	Size	Ft-Lbs
1/4–20	6-9	7/16–14	45-50	5/16–24	15-18	1/2–20	70-80
1/4–28	6-9	7/16–20	50-60	3/8–16	23-28	9/16–16	85-95
5/16–18	12-15	1/2–13	60-70	3/8–24	30-35	5/8–18	130-145

CV1161-A

PART 25-40 Air Cleaner--Diesel

Applies to all Diesel Engines

COMPONENT INDEX	Page
AIR CLEANER BODY	
Cleaning and Inspection	40-09
AIR INLET RESTRICTION CHECK	
At Air Cleaner	40-08
At Engine	40-09
DESCRIPTION	40-01
DUST CUP	
Cleaning and Inspection	40-09
EVACUATOR VALVE	
Cleaning and Inspection	40-09
FILTER ELEMENT	
Cleaning	
With Compressed Air	40-09
With Water	40-09
Installation	40-08
Removal	40-08

DESCRIPTION

A dry type air cleaner is standard equipment on all Ford trucks equipped with Diesel engines. Air is filtered through a pleated, chemically-treated paper element to remove contaminants before entering the engine induction system.

Air cleaners on W, WT, L, LN, LT and LNT Series trucks are equipped with centrifuge fins on the filter element. Air passing through the fins is sent into a circular motion which causes heavy particles of dust and dirt to be thrown out of the air stream. The dirt is collected in the dust port and expelled through a dump valve.

Most air cleaners are equipped with an air restriction gauge which indicates red when the air cleaner needs servicing.

Air cleaner installations are shown in Figs. 1 through 7.

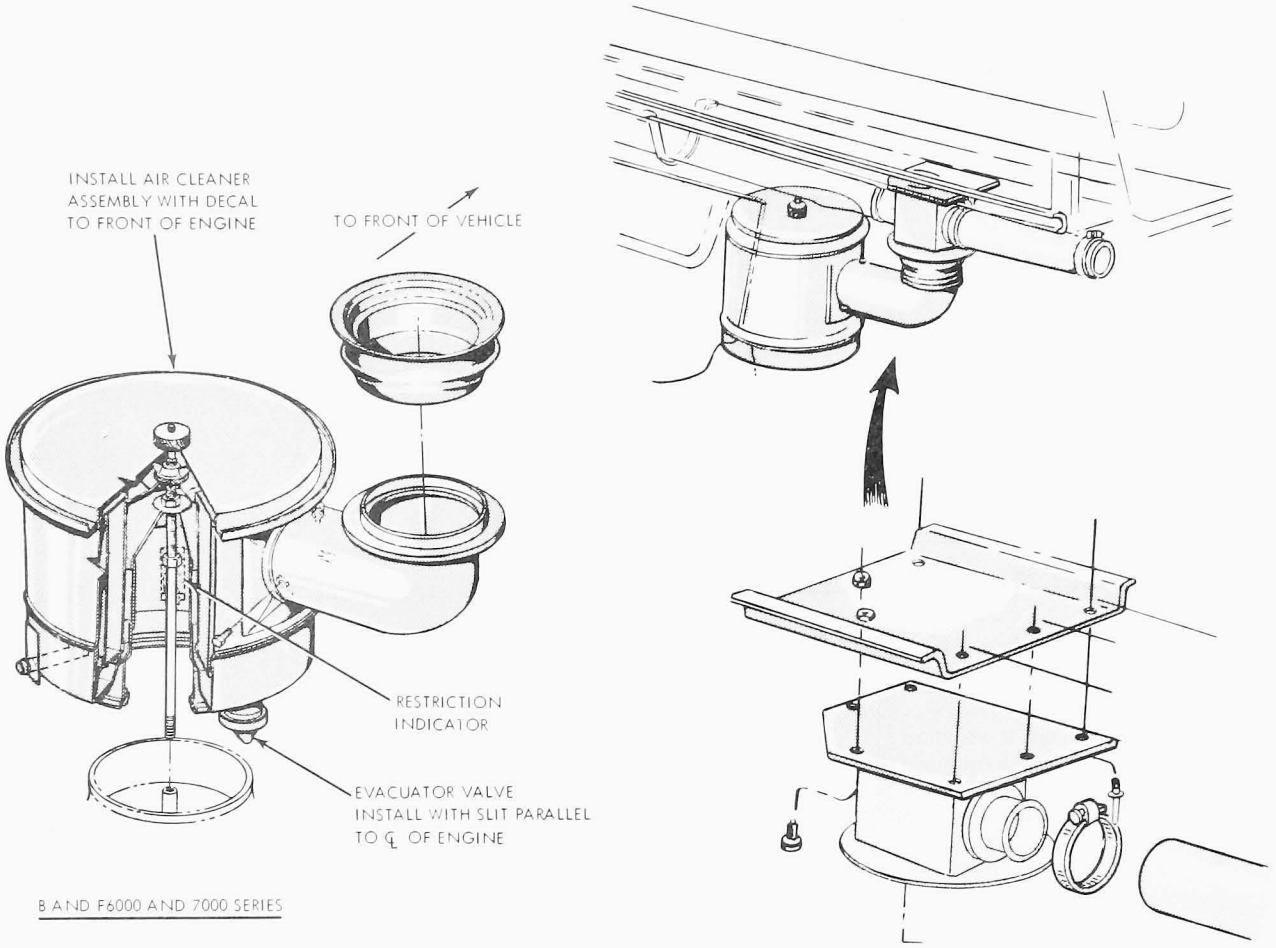

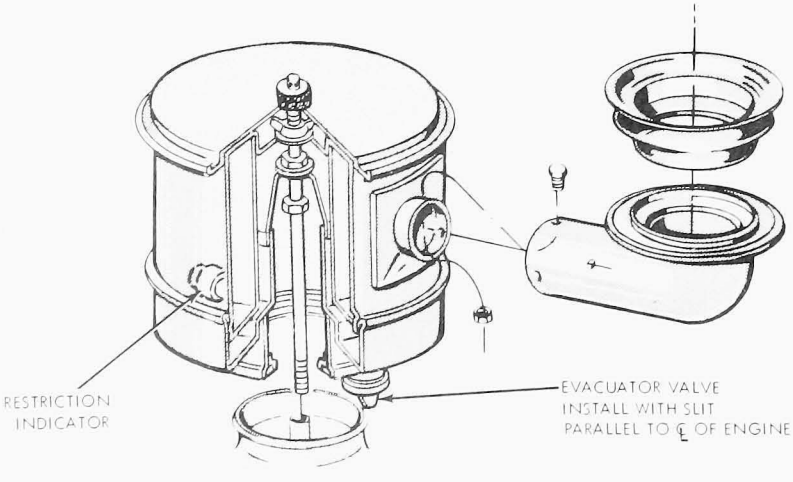

V1001-B

FIG. 1 Air Cleaner C-6000-7000-8000 Series Trucks

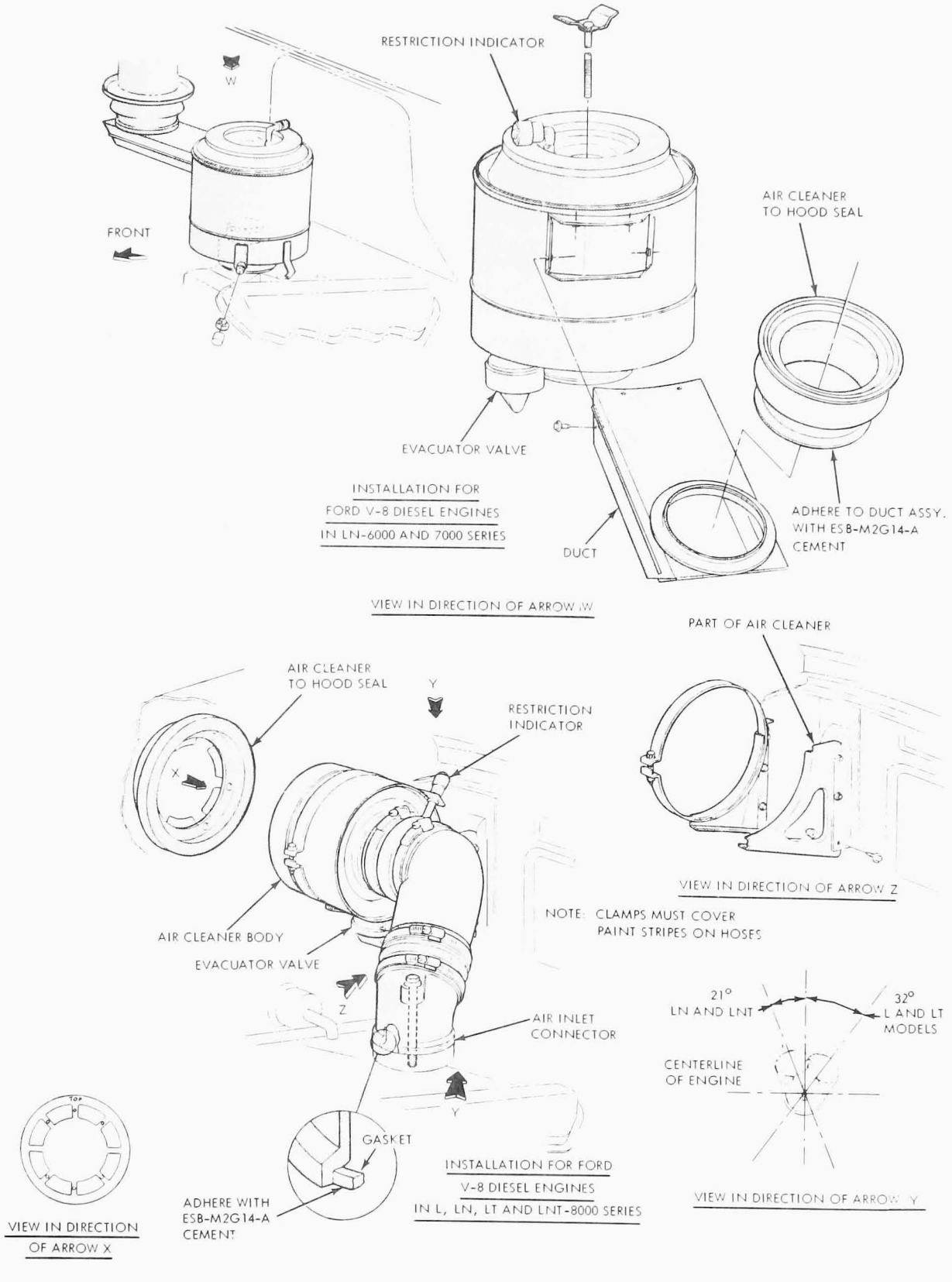

V1321-A

FIG. 2 Air Cleaner-B-7000 F-6000-7000 Series with Ford V-8 Diesel Engine

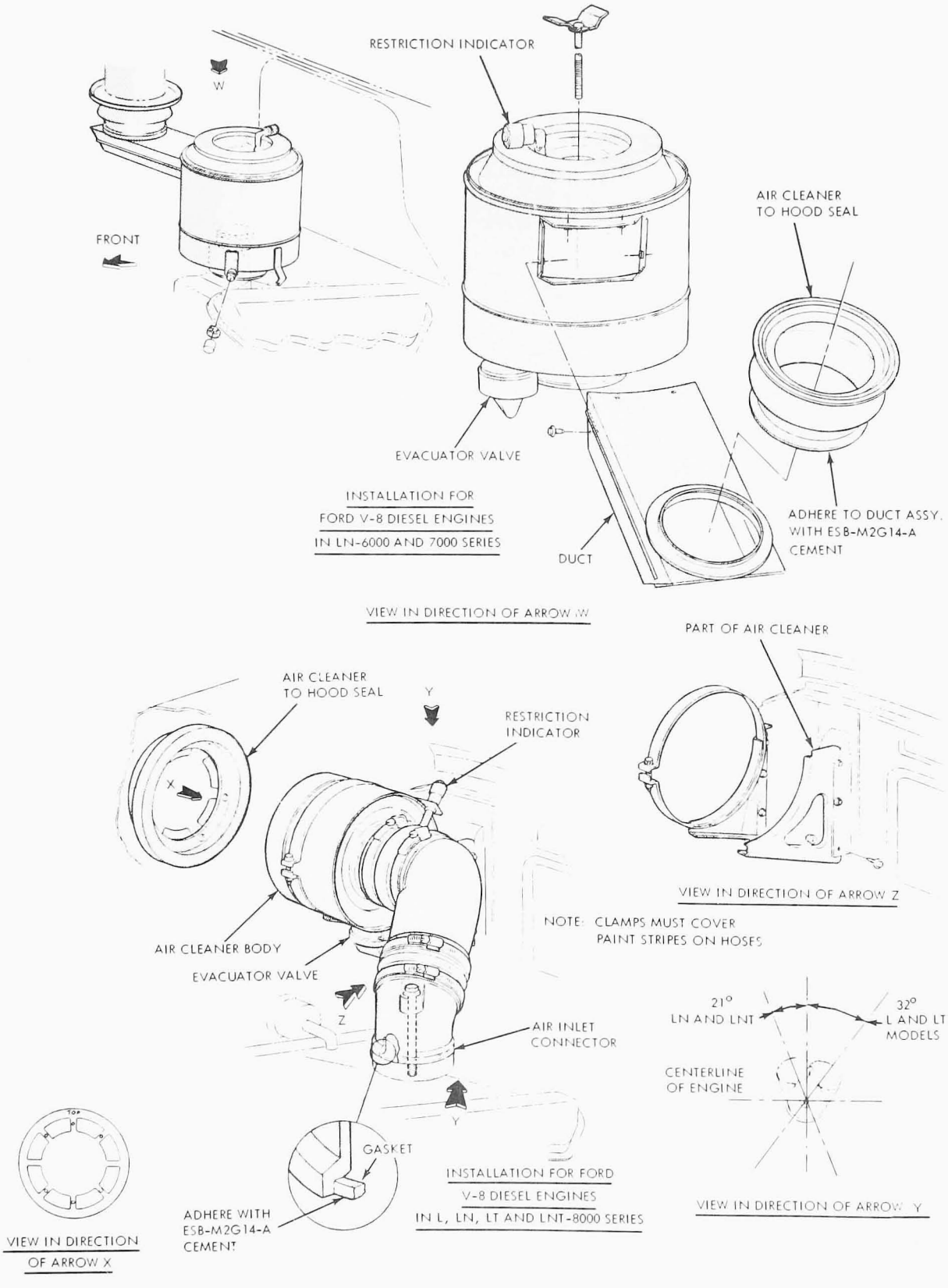

FIG. 3 Air Cleaner—LN 6000-7000 and L-LN-LT-LNT 8000 Series Trucks With Ford V-8 Diesel Engines

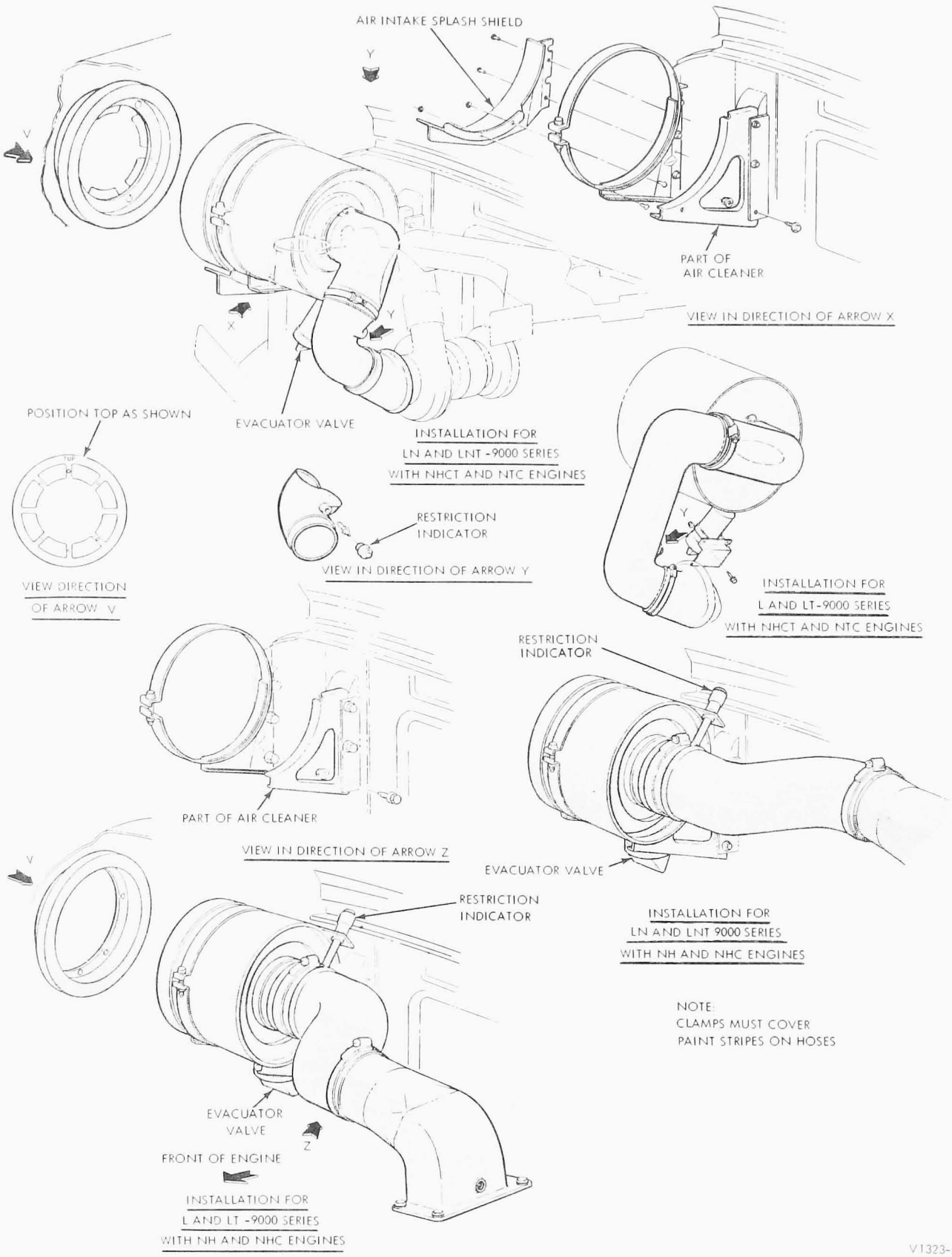

FIG. 4 Air Cleaner—L-LN-LT-LNT-9000 Series Trucks With NH Series Engines

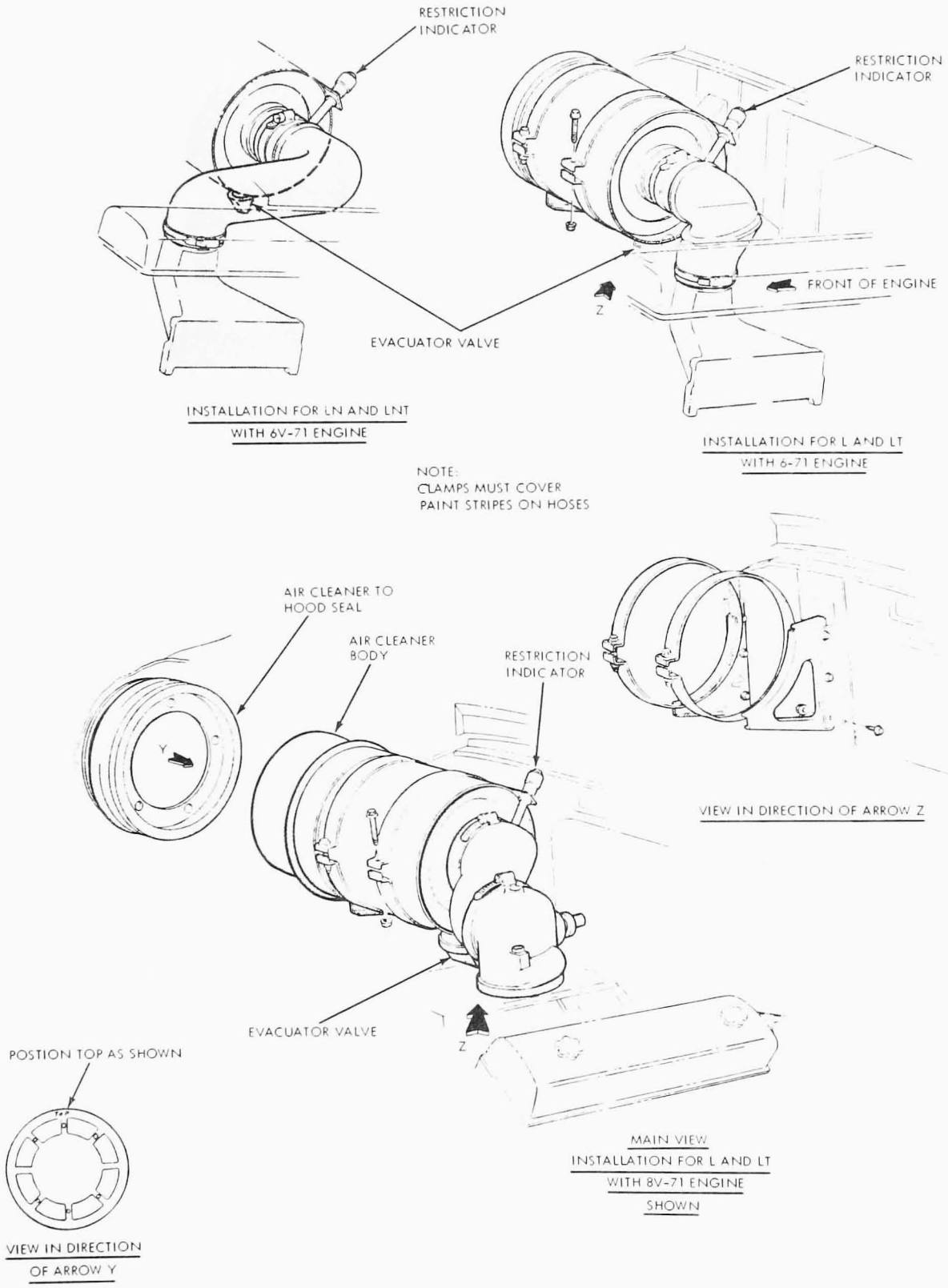

V1322-A

FIG. 5 Air Cleaner—L-LN-LT-LNT-9000 Series Trucks With 8V-71 and 6-71 Engines

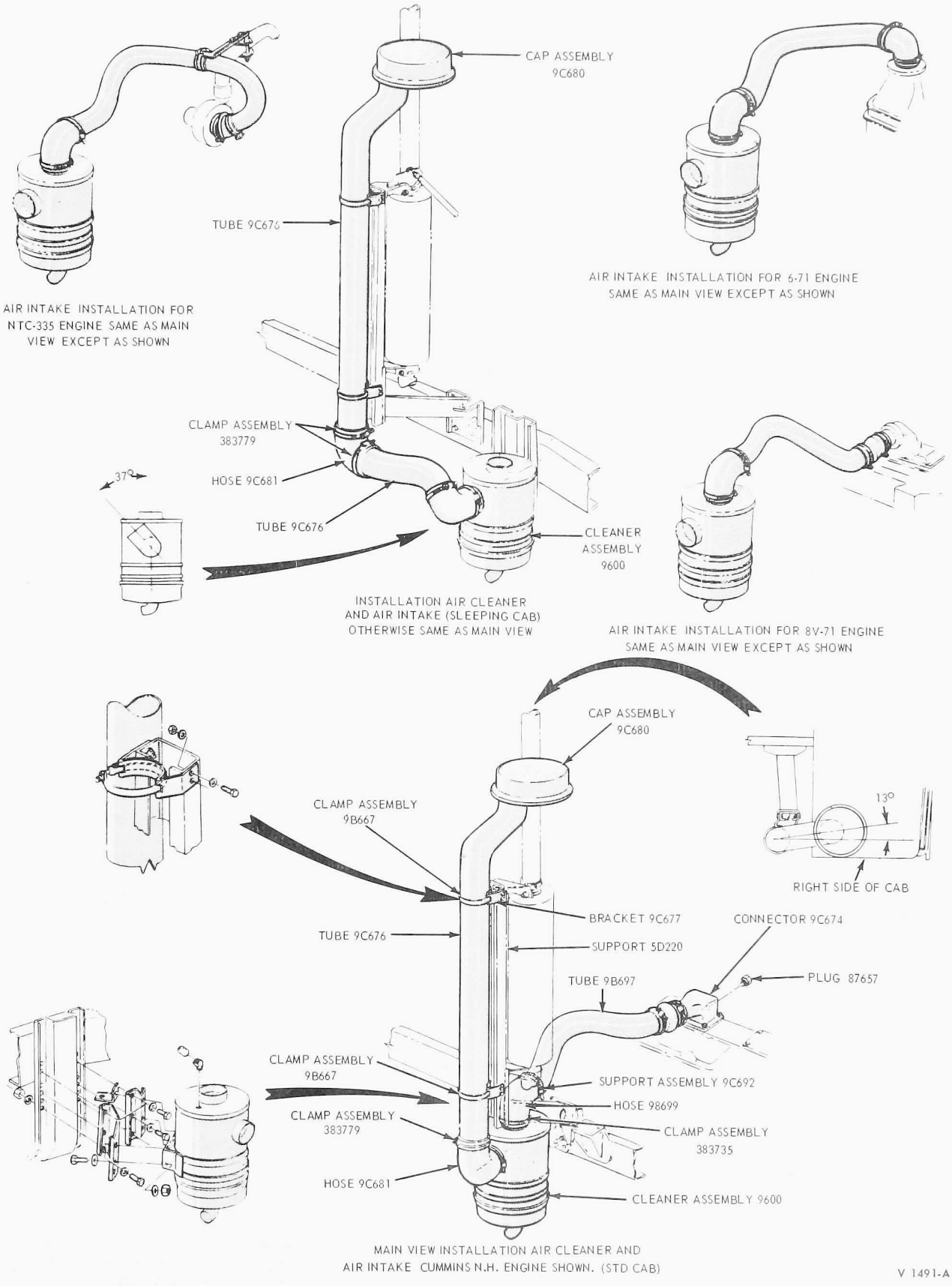

FIG. 6 Air Cleaner—W and WT-Series Trucks

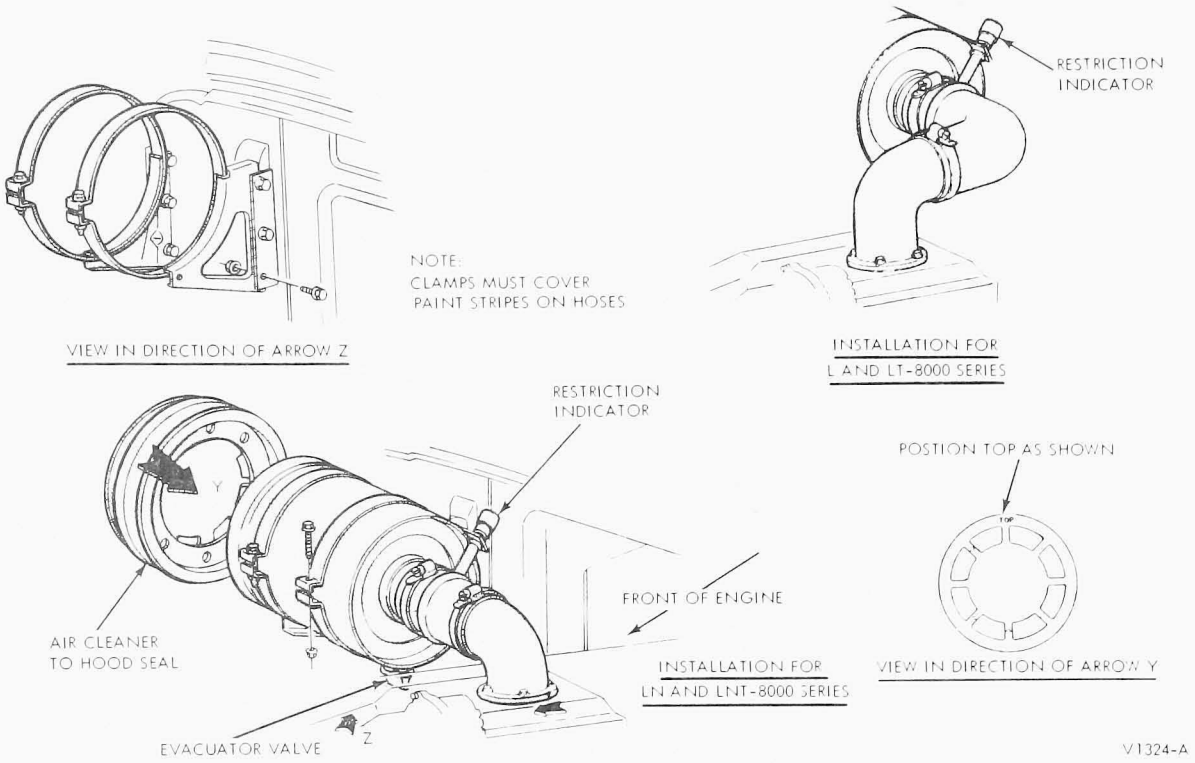

FIG. 7 Air Cleaner—L-LN-LT-LNT-8000 Series Trucks With 6V-53 Engines

REMOVAL AND INSTALLATION

FILTER ELEMENT

Removal

1. Remove the dust cup or cover.
2. Remove the filter element from the air cleaner body.

Installation

Before installing a new or cleaned element in the air cleaner, check the following items:

1. Gasket surfaces should be clean and undamaged.
2. Outlet tube should be clean and undamaged.
3. All rags and tools must be removed from the air cleaner body.
4. Element should be dry and free of holes, ruptures, damaged gaskets or dents in end covers and liners.
5. Element retaining nut or bolt should have the gasket washer attached and it should be in good condition.

After the air cleaner, element, dust cup and other parts are found to be in good condition, reassemble the parts as follows:

1. Install the element and tighten the wing nut or bolt securely. Hand tightening is sufficient. Make sure the rubber face of the washer seals against the element.
2. Install the dust cup or cover. Make sure gasket (if supplied) is in place. Replace a worn or damaged gasket.
3. Tighten dust cup clamp or cover securely.

Be sure a seal is made between the dust cup and the air cleaner body. A leak would reduce element life.

CLEANING AND INSPECTION

AIR INLET RESTRICTION CHECK

The best method for determining dry-type air cleaner maintenance periods is through air restriction checks.

At Air Cleaner

A mechanical restriction indicator is installed on the air cleaner to indicate excessive air restriction. The gauge shows completely red in the indicator window when restriction reaches 25 inches of water (Fig. 8).



FIG. 8 Air Cleaner Restriction Indicator

If the restriction indicator indicates red:

Clean or replace dry-type cleaner element.

Replace damaged air piping, rain shield or housing.

Remove excessive bends or other source of restriction in air piping.

Reset the restriction indicator after servicing the air cleaner.

At Engine

1. On naturally aspirated engines, attach vacuum gauge or water manometer in the middle of the intake manifold or on the air intake piping. When located in the air intake piping, the adaptor must be perpendicular to the air flow and not more than six inches from the air intake manifold connection.
2. On turbocharged or supercharged engines, attach the checking fixture on pipe diameter upstream from the supercharger or turbocharger in a straight section of tubing.
3. Idle the engine until normal operating temperature is reached.
4. Operate engine at rated speed full-load and take reading from vacuum gauge or manometer. Air restriction must not exceed 25 inches of water or 1.8 inches of mercury.
5. If air restriction exceeds 25 inches of water or 1.8 inches of mercury:

Clean or replace dry-type cleaner element.

Replace damaged air piping, rain shield or housing.

Remove excessive bends or other source of restriction in air piping.

FILTER ELEMENT

Washing in water or blowing with compressed air are two accepted methods for cleaning elements of the **Cyclopac** air cleaners. If elements regularly contain substantial amounts of soot or oil fumes, washing in water works better than compressed air. If the contaminant on the element is dust, either method works well. Elements that are cleaned with compressed air can be put back into service immediately. Washed elements must be dried before they can be used.

Some elements are partially covered by a plastic sleeve with fins. The covered portion can be cleaned with water or air without removing the sleeve. Use a stiff fiber (not wire) brush to remove oil and grease deposits from the sleeve and fins. **Do not remove plastic sleeve and fins from the element.**

CLEANING WITH COMPRESSED AIR

1. Direct a jet of clean, dry air from the inside of the filter element, perpendicular to the pleats. **Pressure at air nozzle must not exceed 100 psi.**
2. Move the air jet up and down along the pleats, slowly rotating the element, until no more dust is being removed. **Be certain that the element is not ruptured by the nozzle or the air jet.**

CLEANING WITH WATER

The elements can be cleaned by washing with water and a good non-sudsing detergent. Direct a jet of clean, dry air from the inside of the filter element. When the loose dust and soot have been removed, the element is ready to be washed.

1. Dissolve the detergent in a small amount of cool water.
2. Add warm (approximately 100 degrees F) water to get the proper proportions of detergent and water (about one cup of detergent to five gallons of water).
3. Soak the element in the solution for at least 15 minutes.
4. Agitate the element for about 2 minutes to loosen the dirt.

Never use gasoline or solvent to clean elements.

5. Rinse the element with clean water until the water coming through the element is clean. Water pressure from a hose or tap should not be over 40 psi. Air-dry the element thoroughly before using.

Mechanized drying methods can be used. However, heated air (maximum temperature 180 degrees F) must have some circulation. **Do not use light bulbs for drying elements.**

6. After cleaning the filter element with air or water, inspect the element for damage. Look for dust on the clean air side, the slightest rupture or damaged gaskets. A good method to detect ruptures in the element is to place a light inside the element and look toward the light from the outside. A hole in the element, even a very small one, will pass dust to the engine and cause wear.

DUST CUP

1. Stop the engine.
2. Remove the dust cup, then remove the baffle from the cup and empty the dust.
3. Replace the baffle in the cup, making sure that the baffle is properly seated. Check the dust cup sealing edge for damage. Check the dust cup gasket (if so equipped).
4. Replace the dust cup and make sure it is properly positioned on the air cleaner body. On horizontally mounted models, the proper cup position is indicated by the arrows located on the bottom of the cup. Also, the slot in the dust cup baffle must be at the top.

EVACUATOR VALVE

Evacuator valve lips must be kept free from debris. Mud and chaff can lodge in the lips and hold them open during operation. Check the lips periodically and keep them clean. The valve lips should be open only when the engine is at low idle or stopped. The lips must point down to function.

On W-and WT-Series trucks a protection hose is provided for the evacuator valve. The protection hose is to be installed toward the rear of the vehicle.

AIR CLEANER BODY

Before re-installing the filter element, remove any foreign material (leaves, lint, or other matter) that may have collected inside the air cleaner body. Inspect the inside of the body for dents or other damage that would interfere with air flow or with the fins on the element or inside the body. Repair body dents, being careful not to damage sealing surfaces. Wipe out the inside of the body with a clean rag to remove any dirt.

When the air cleaner is mounted on the engine, use compressed air to clean the air cleaner body only with the element in place.

PART 25-50 Fuel Tanks and Lines

Refer to Part 24-50 for service of the fuel tanks and lines.

PART 25-51 Fuel Filters-Diesel Engines

COMPONENT INDEX	Page	COMPONENT INDEX	Page
DESCRIPTION	51-01	FUEL FILTERS – Contd.	
FUEL FILTERS		Removal and Installation – Contd.	
Removal and Installation		NH Series	51-01
Models 1140, 1145, 1150 and 1160	51-01	Models 6V-53, 6-7 In., 8V-71N	51-01

DESCRIPTION

FUEL FILTERS

FORD V-8 DIESEL FUEL FILTER

A two-stage fuel filter is provided on the pressure side of the lift pump. Since the filter is located on the pressure side of the pump, the possibility of air induction into the system is eliminated. The fuel filter element is the spin-on type.

CUMMINS DIESEL FUEL FILTER

A cannister-type fuel filter is provided on the left rear side of the engine (Fig. 1). The filter is located between the fuel tank and suction side of the pump.

DETROIT DIESEL FUEL FILTER

A fuel strainer and a fuel filter is provided in the Detroit Diesel Engine fuel system (Fig. 2). The fuelstrainer is located between the fuel tank and the suction side of the lift pump.

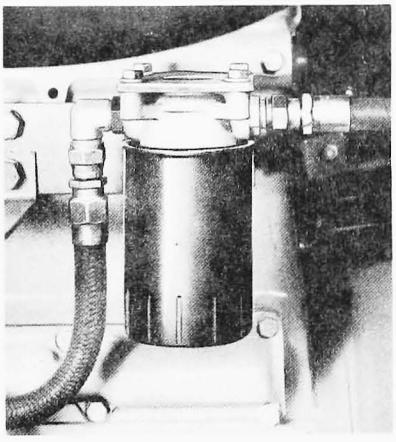

FIG. 1 Typical Engine Mounted Fuel Filters

The fuel filter is located between the fuel lift pump and the fuel inlet manifold.

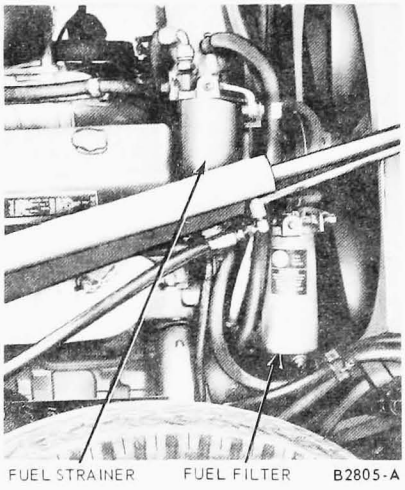

FIG. 2 Detroit Diesel Fuel Filter

REMOVAL AND INSTALLATION

FORD V-8 AND CUMMINS DIESEL FUEL FILTER

Removal

1. Turn the fuel filter element counterclockwise until it is free of the base.
2. Discard the filter element.

Installation

1. Clean the seal surface on the filter base thoroughly.
2. Wipe up any fuel that was spilled when removing the old filter.
3. Coat the seal of the new filter with oil.
4. Thread the filter onto the base until the seal contacts the base, then tighten it one additional 1/2 turn.

DETROIT DIESEL FUEL STRAINER OR FUEL FILTER

This procedure applies to either the fuel strainer or the fuel filter.

Removal

1. Place a container under the strainer or filter and open the draincock. Loosen the cover nut or bolt just enough to allow the fuel oil to drain out freely; then, close the draincock.
2. While supporting the shell, unscrew the cover nut or bolt and remove the shell and element. Also remove and discard the cover nut retaining ring, if used.
3. Remove and discard the filter element and shell gasket. Wash the shell thoroughly with clean fuel oil and dry it with compressed air.

Installation

1. Place a new element over the shell stud and push it down against the element seat. Close the draincock; then fill the shell about two-thirds full with clean fuel oil.
2. Place a new shell gasket in the recess of the shell, also place a new gasket on the cover nut or bolt.
3. Place the shell and element into position under the cover. Then, start the cover nut or bolt on or into the shell stud.
4. With the shell and the gasket properly positioned, tighten the cover nut just enough to prevent fuel leakage.
5. Remove the pipe plug at the top of the filter or strainer and complete filling of the shell with fuel.

   Fuel System Primer J5966 may be used to prime the entire fuel system.
6. Run the engine and check the fuel system for leaks.

SPECIFICATIONS

FUEL FILTER ELEMENT

Spin-on Type	Tighten until seal contacts base, then tighten one additional half turn.
Cannister Type	Tighten cover bolt just enough to prevent leakage at seal.

CA1220-A

PART 25-60 Throttle Linkage

COMPONENT INDEX	Page
THROTTLE LINKAGE ADJUSTMENT	
Models 1140, 1145, 1150 and 1160 Engine	60-01
NH Series Engine	60-03
THROTTLE LINKAGE ADJUSTMENT - Cont.	
Model 6-71 Engine	60-04
M Model 6V-53 Engine	60-06
Model 8V-71 Engine	60-06

ADJUSTMENT

F-AND B-6000-7000 SERIES TRUCKS WITH FORD V-8 DIESEL ENGINES

Refer to Figs. 1 and 2.

1. Depress the accelerator pedal to the stop bolt on the floor.
2. Adjust the accelerator rod until the throttle lever is at the wide open (high idle) position.
3. Shorten the rod an additional two turns.

C-6000-8000 SERIES TRUCKS WITH FORD V-8 DIESEL ENGINES

Refer to Fig. 3.

1. Release the cab locks. Tilt the cab forward and lock into the forward position.
2. Loosen the hand throttle control cable clevis at the bellcrank.
3. Place a spacer 0.200 inch thick between the pedal and the pedal stop. Depress the pedal against the spacer.
4. Adjust the rod assembly at the throttle lever until the lever is in the wide open (high idle) position.
5. With the hand throttle control handle and the throttle lever in the idle (low idle) position insert the hand throttle control cable into the clevis. Tighten the clevis clamp screw.
6. Operate the hand throttle control

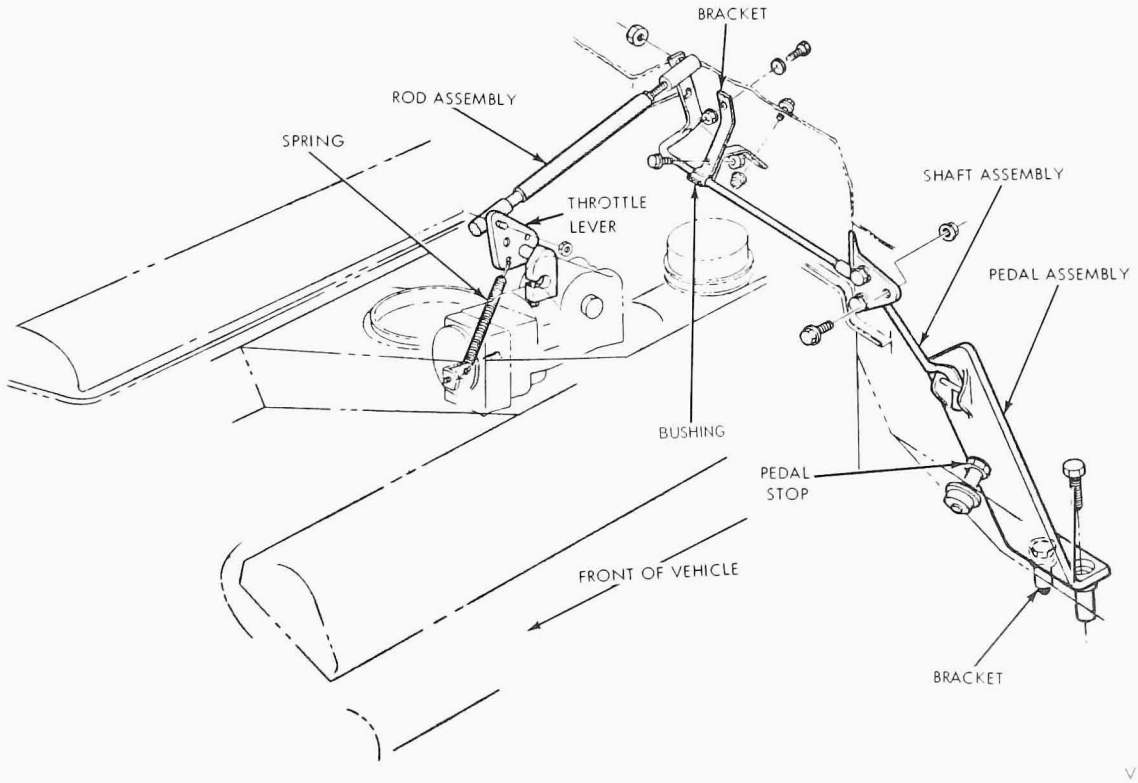

FIG. 1 Throttle Linkage—F-6000-7000 Series with Ford V-8 Diesel Engines

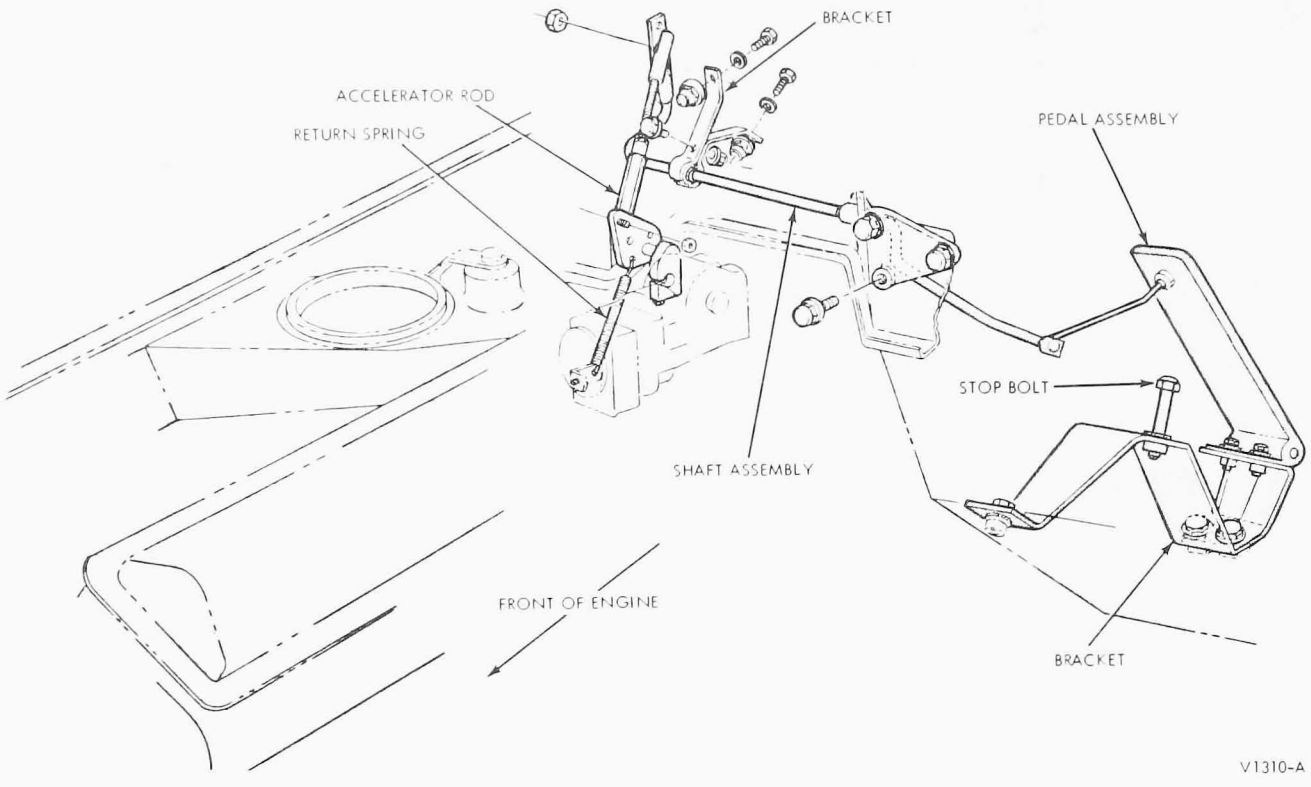

FIG. 2 Throttle Linkage—B-6000-7000 Series with Ford V-8 Diesel Engine

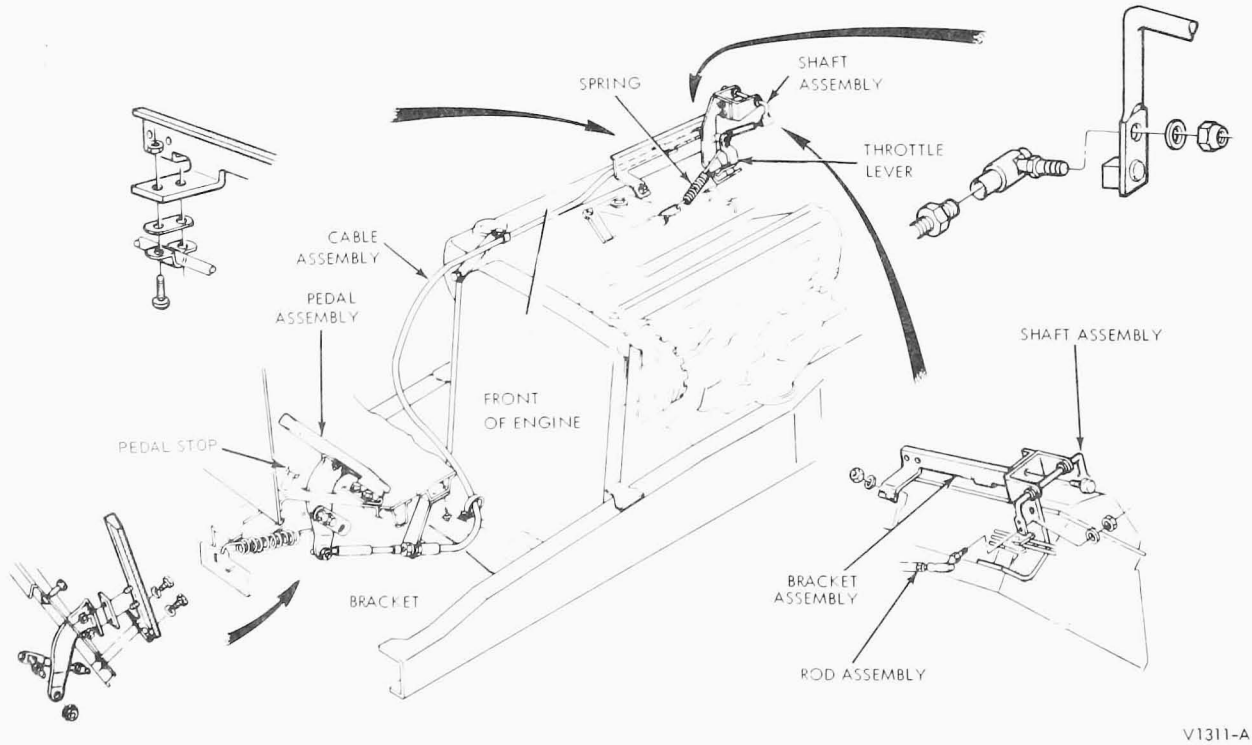

FIG. 3 Throttle Linkage—C-6000-8000 Series with Ford V-8 Diesel Engine

handle to ensure full travel from idle (low idle) to wide open (high idle) positions.
7. Lower the cab and lock into position.

L-LN-LT-AND LNT-6000-8000 SERIES TRUCK WITH FORD V-8 DIESEL ENGINES

Refer to Fig. 4.
1. Loosen the hand throttle control cable retaining clamp at the bracket and the clevis at the throttle lever.
2. With the pedal held against the stop adjust the accelerator rod until the throttle lever is in the wide open (high idle) position. Shorten the rod an additional two turns.
3. Push the hand throttle control handle into the idle position. With the throttle lever in the idle (low idle) position, insert the end of the hand throttle control cable into the clevis and tighten the clamp screw. Tighten the cable retaining clamp on the bracket.
4. Operate the hand throttle control knob to insure full travel from idle (low idle) to wide open (high idle)position.

L-LN-LT-AND LNT-9000 SERIES TRUCKS WITH CUMMINS NH ENGINES

Refer to Fig. 5.
1. Loosen the hand throttle control cable retaining clamp at the bracket.
2. With the pedal held against the stop, adjust the accelerator rod length until the fuel pump throttle lever is in the wide open position. Shorten the accelerator rod an additional two turns.
3. Push the hand throttle control cable handle to the idle position. Position the fuel pump throttle lever in the idle position and tighten the hand throttle control cable retaining clamp at the bracket.
4. Pull the hand throttle control cable to the wide open position and check to make sure the fuel pump throttle lever is in the wide open position.

W-AND WT-9000 SERIES TRUCKS WITH CUMMINS ENGINES

Refer to Fig. 6.
1. Release the cab locks and tilt the cab forward.
2. Disconnect the accelerator spring and the accelerator rod assembly at the injector fuel pump lever, located on the engine.
3. Set the injector fuel pump lever to the idle position.
4. Position the accelerator shaft assembly so that the left-hand lever is horizontal and attach the accelerator rod assembly. Attach the return spring.
5. Loosen the hand throttle control cable retaining clip and clamps. With the fuel pump lever in the idle position, slide the hand throttle control cable through the lever assembly and the disc-type clamp. Tighten the clamp.
6. Pull the handle on the throttle control cable outward to the wide-open position. Tighten the clamp on the hand throttle control bracket and the cable clip. This will secure the cable assembly in relation to the injector fuel pump wide-open throttle position.
7. With the cab in the retracted and locked position, depress the accelerator pedal fully and adjust the accelerator pedal to slip shaft

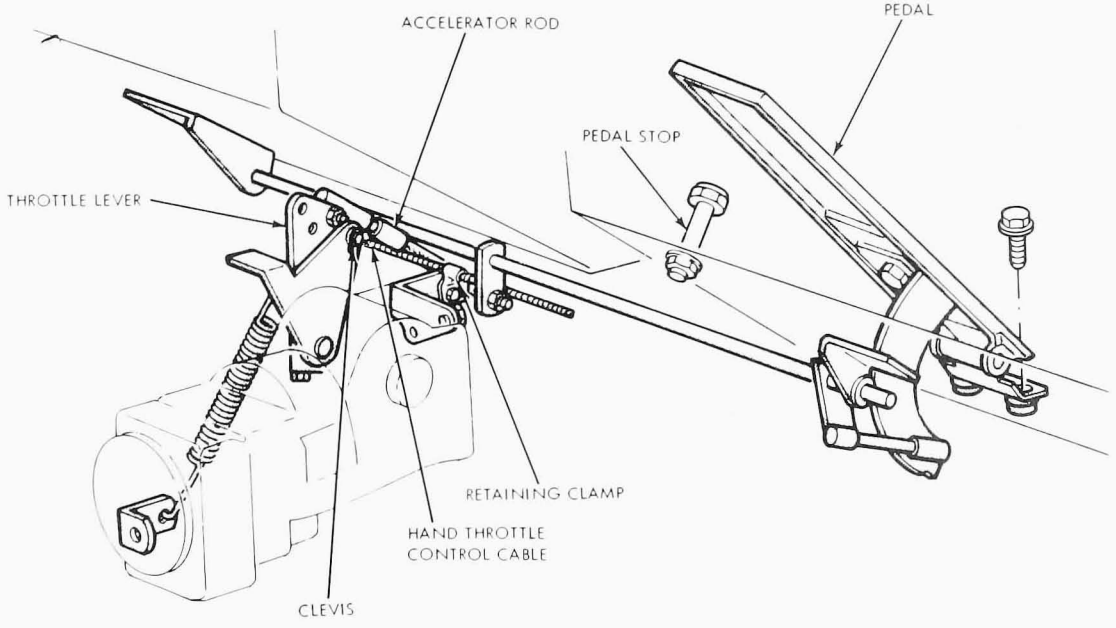

FIG. 4 Throttle Linkage—L-LN-LT-LNT 6000-8000 Series with Ford V-8 Diesel Engine

rod until the accelerator pedal just touches the stop bolt.

L-LN-LT-AND LNT-9000 SERIES TRUCKS WITH DETROIT DIESEL 6-71 ENGINES

Refer to Fig. 7.

1. Loosen the hand throttle control cable clevis at the throttle lever and the retaining clamp at the bracket.
2. With the throttle lever in the idle (low idle) position adjust the short accelerator rod so that the long bellcrank lever is in the position shown in Fig. 7.
3. Loosen the clamp screw on the short bellcrank lever and position it as shown in Fig. 7.
4. With the accelerator pedal held against the stop, adjust the long accelerator rod until the throttle lever is in the wide open (high idle) position. Shorten the rod an additional two turns.
5. Push the hand throttle control handle to the idle position.
6. With the throttle lever at the idle (low idle) position, insert the end of the hand throttle control cable into the clevis and tighten the clamp screw.
7. Tighten the hand throttle control cable retaining clamp at the bracket.
8. Operate the hand throttle control handle to ensure full travel from idle (low idle) to wide open (high idle) positions.
9. Loosen the fuel shut off control cable at the clevis and retaining clamp. Push the control handle to the ON position.
10. Position the fuel shut off lever in the ON position and insert the end of the control cable into the clevis. Tighten the clevis clamp screw and the cable retaining clamp at the bracket.
11. Operate the fuel shut off handle to insure full travel from ON to OFF positions.

W-AND WT-9000 SERIES TRUCKS WITH DETROIT DIESEL 6-71 ENGINES

Refer to Fig. 8.

1. Loosen the hand throttle control cable at the clevis and retainer clamp.
2. With the throttle lever at the idle (low idle) position adjust ROD A until LEVERS B and C are as shown in VIEW W.
3. Position BELLCRANK G as shown in VIEW X and adjust RODS D and F to acquire a good working angle with the levers on BELLCRANK E.
4. Slide the hand throttle control cable through the retaining bracket and into the throttle lever. Tighten the cable retaining screw in the throttle lever.
5. Pull the throttle control handle to the full open position and tighten the bracket.
6. Push the fuel shut off control handle to the ON position. With the fuel shut off lever in the ON position insert the control cable into the clevis and tighten the clamp screw. Tighten the cable retaining clamp at the bracket. Operate the fuel shut off control handle to ensure full travel from the ON to OFF positions.
7. With the cab in the retracted and locked position depress the

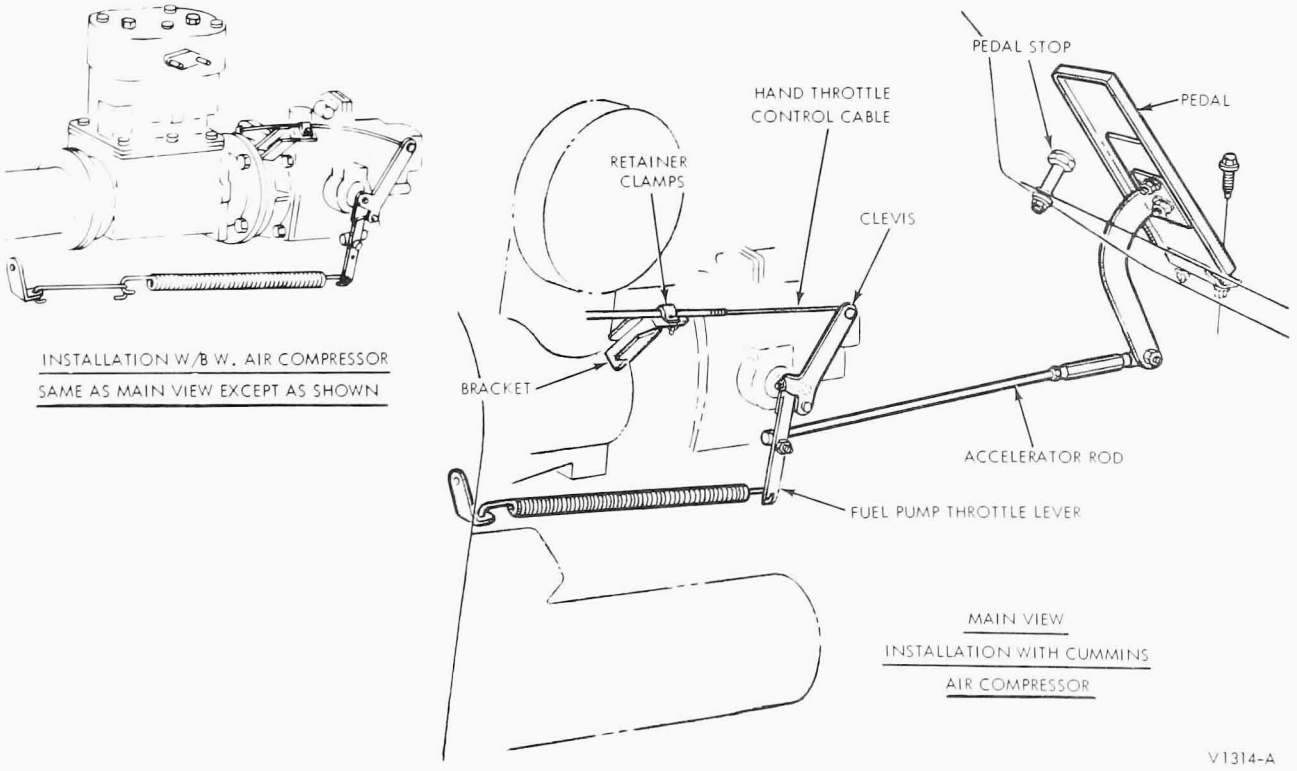

FIG. 5 Throttle Linkage—L-LN-LT-LNT Series with NH Series Diesel Engines

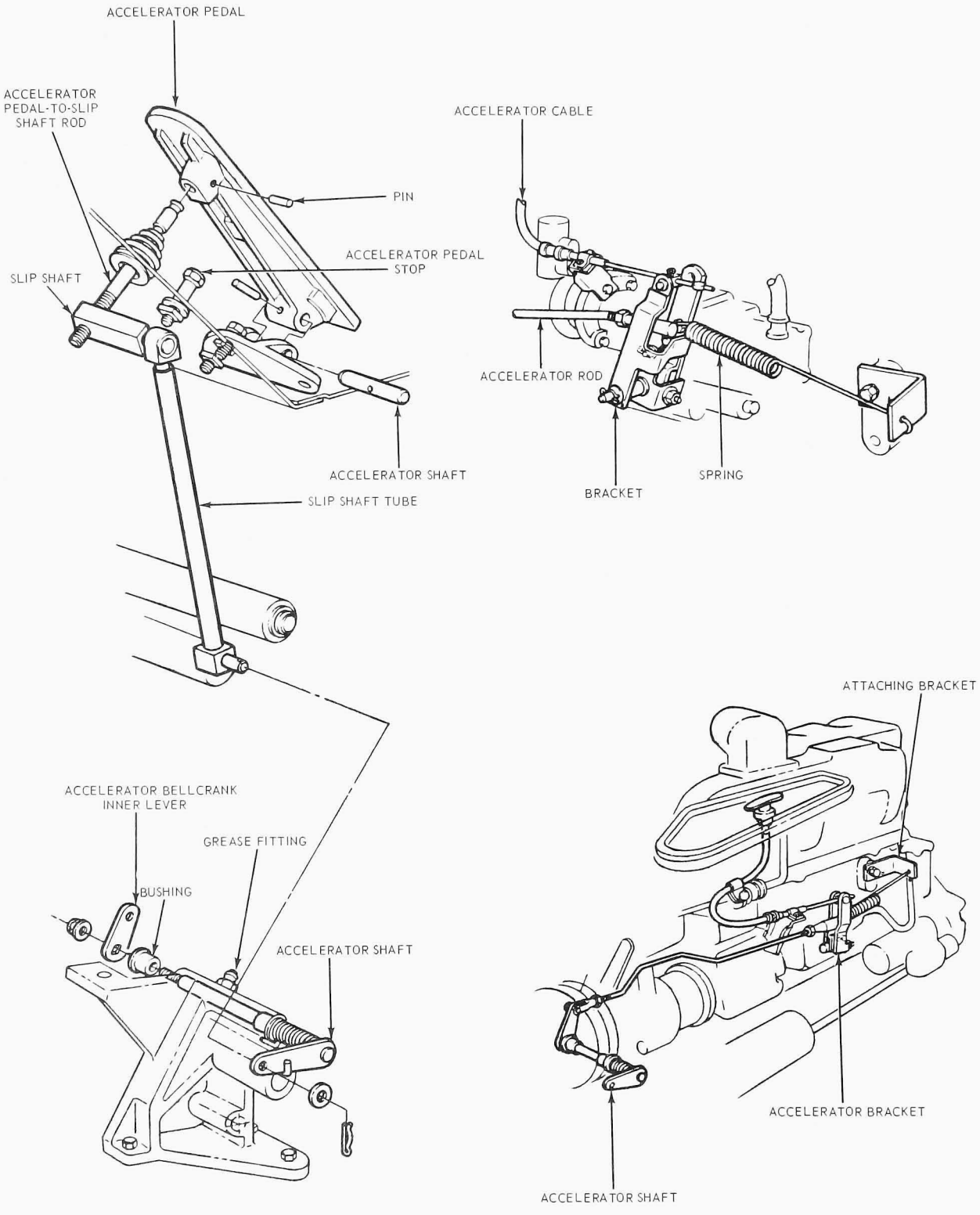

V 1014-B

FIG. 6 Throttle Linkage—W and WT Series with NH Series Diesel Engine

accelerator pedal fully and adjust ROD H until the pedal just touches the stop bolt.

L-LN-LT-AND LNT-8000 SERIES TRUCKS WITH DETROIT DIESEL 6V-53 ENGINES

Refer to Fig. 9.

1. Loosen he hand throttle and fuel shut off control cable retaining clamps at the bracket.
2. Loosen the throttle lever clamp bolt.
3. Insert a 0.090 diameter locating pin in the alignment holes of the bellcrank assembly.
4. Insert an Allen wrench in the top of the throttle shaft and rotate the shaft to the wide open (high idle) position. Tighten the throttle lever clamp bolt.
5. Remove the locating pin from the bellcrank assembly.
6. Depress the accelerator pedal against the stop and adjust the accelerator rod until the throttle lever is in the wide open (high idle) position. Shorten the rod an additional two turns.
7. Place the hand throttle control cable in the idle (low idle) position. With the throttle lever in the idle position tighten the hand throttle control cable retaining clamp at the bracket.
8. Operate the hand throttle control handle to ensure full travel from the idle (low idle) to wide open (high idle) positions.
9. Place the fuel shut off control in the ON position. With the fuel shut off lever in the ON position, tighten the control cable retaining clamp at the bracket. Operate the fuel shut off control to ensure full travel from the ON to OFF positions.

L-AND LT-9000 SERIES TRUCKS WITH DETROIT DIESEL 8V-71 ENGINES

Refer to Fig. 10.

1. Loosen the hand throttle control cable at the clevis and retaining clamp.
2. Loosen the clamp screw on the throttle lever. Install a 1/8 inch drill bit through the alignment holes on the bellcrank assembly.
3. Turn the throttle (governor) shaft to the wide open (high idle) position and tighten the throttle lever clamp bolt.
4. Remove the 1/8 inch drill bit from the alignment holes.
5. With the pedal against the stop, adjust the accelerator rod until the throttle lever is at the wide open (high idle) position. Shorten the accelerator rod an additional two turns.
6. Push the hand throttle control handle to the idle (low idle) position. Position the throttle lever at the idle (low idle) position and insert the end of the hand throttle cable into the clevis. Tighten the clevis clamp and the cable retainer clamp.
7. Operate the hand throttle control and check for full travel from idle to wide open position.
8. Loosen the fuel shut off control cable at the clevis and clamp. Push the control handle to the ON position.
9. Position the fuel shut off lever in the ON position and insert the end of the control cable into the clevis. Tighten the clevis clamp screw and the cable retaining clamp at the bracket.
10. Operate the fuel shut off handle to

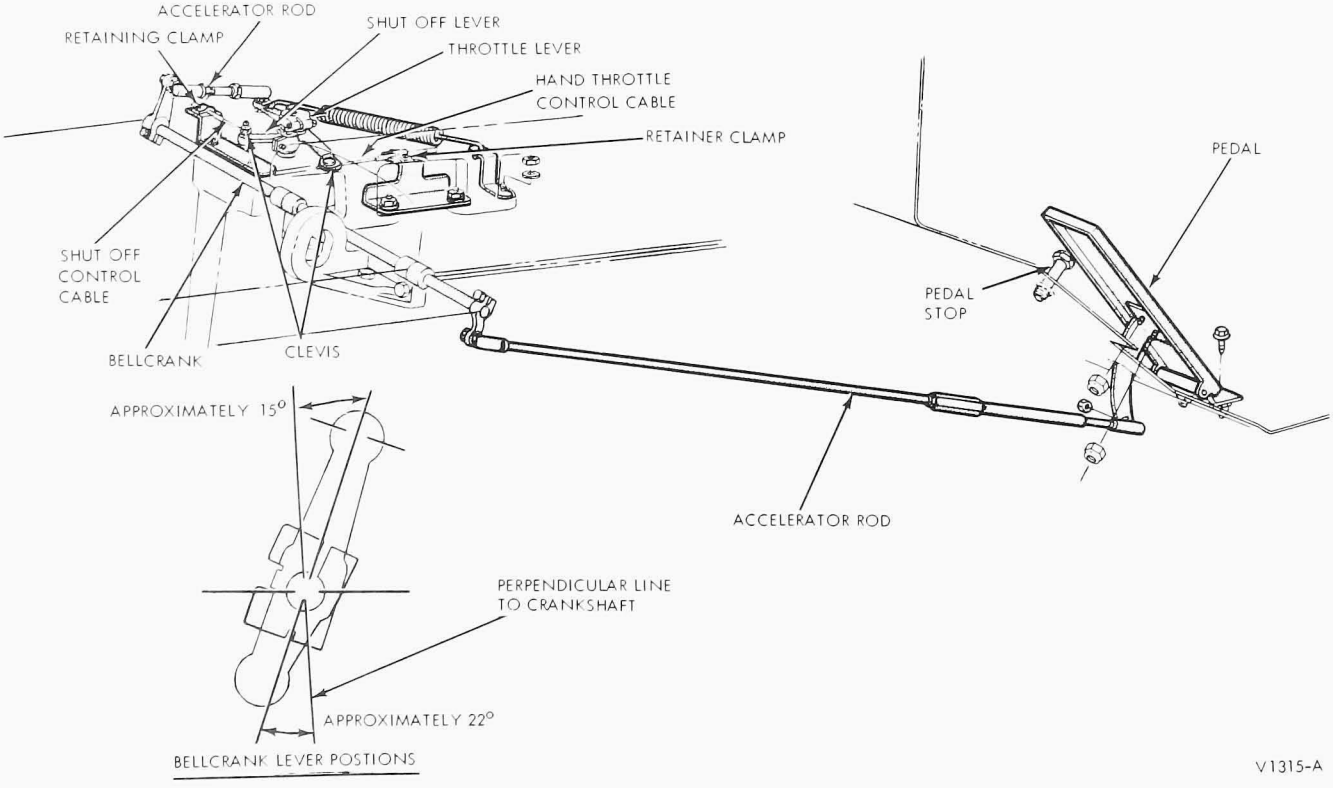

FIG. 7 Throttle Linkage—L-LN-LT-LNT-9000 Series with 6-71 Diesel Engine

insure full travel from the ON to OFF positions.

W-AND WT-9000 SERIES TRUCKS WITH DETROIT DIESEL 8V-71 ENGINES

Refer to Fig. 11.

1. Release the cab locks and tilt the cab forward.
2. Disconnect the throttle return spring. Disconnect the bellcrank to cross-over shaft rod at the accelerator bellcrank inner-lever. Disconnect the vertical accelerator rod assembly at the accelerator shaft and housing assembly. Disconnect the fuel pump rod at the vertical accelerator rod.
3. Rotate the vertical accelerator rod to the idle position and lock into place using a 1/8 inch drill rod through the alignment holes (Fig. 11). Install the fuel pump rod on the vertical accelerator rod.
4. Position the accelerator shaft assembly so that the left (outer) lever is horizontal. Install the cross-over rod to the inner lever of the accelerator shaft assembly. Connect the throttle return spring.
5. Slide the hand throttle cable through the hand throttle lever clevis (in idle position) and tighten the retaining screw in the hand throttle lever clevis.

Pull the handle on the throttle control cable outward to the wide-open position. Tighten the throttle cable to support bracket clamp and the throttle control cable slips. This will secure the cable assembly in relation to the injector fuel pump wide open throttle position.

6. Position the fuel shut-off control lever assembly on the engine to the ON position. Slide the fuel shut-off control cable through the lever and tighten the cable clamp.
7. Pull the handle on the fuel shut-off control cable outward to the shut-off position. Tighten the shut-off cable retaining clips and clamps. This will secure the cable assembly in relation to the fuel shut-off position.
8. With the cab in the retracted and locked position, depress the accelerator pedal fully and adjust the accelerator pedal to slip shaft rod until the accelerator pedal just touches the stop bolt.

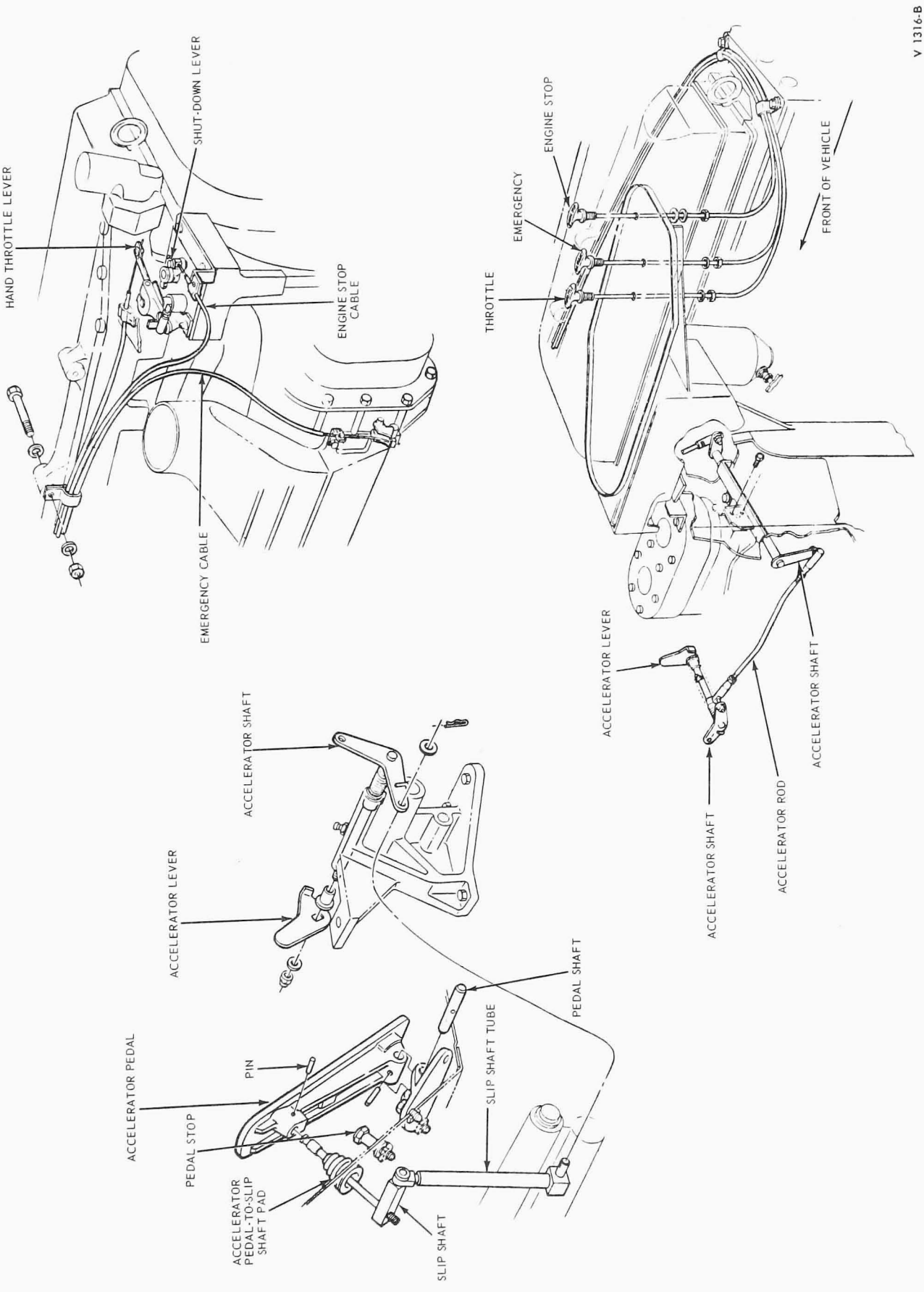

FIG. 8 Throttle Linkage—W and WT-9000 Series with 6-71 Diesel Engine

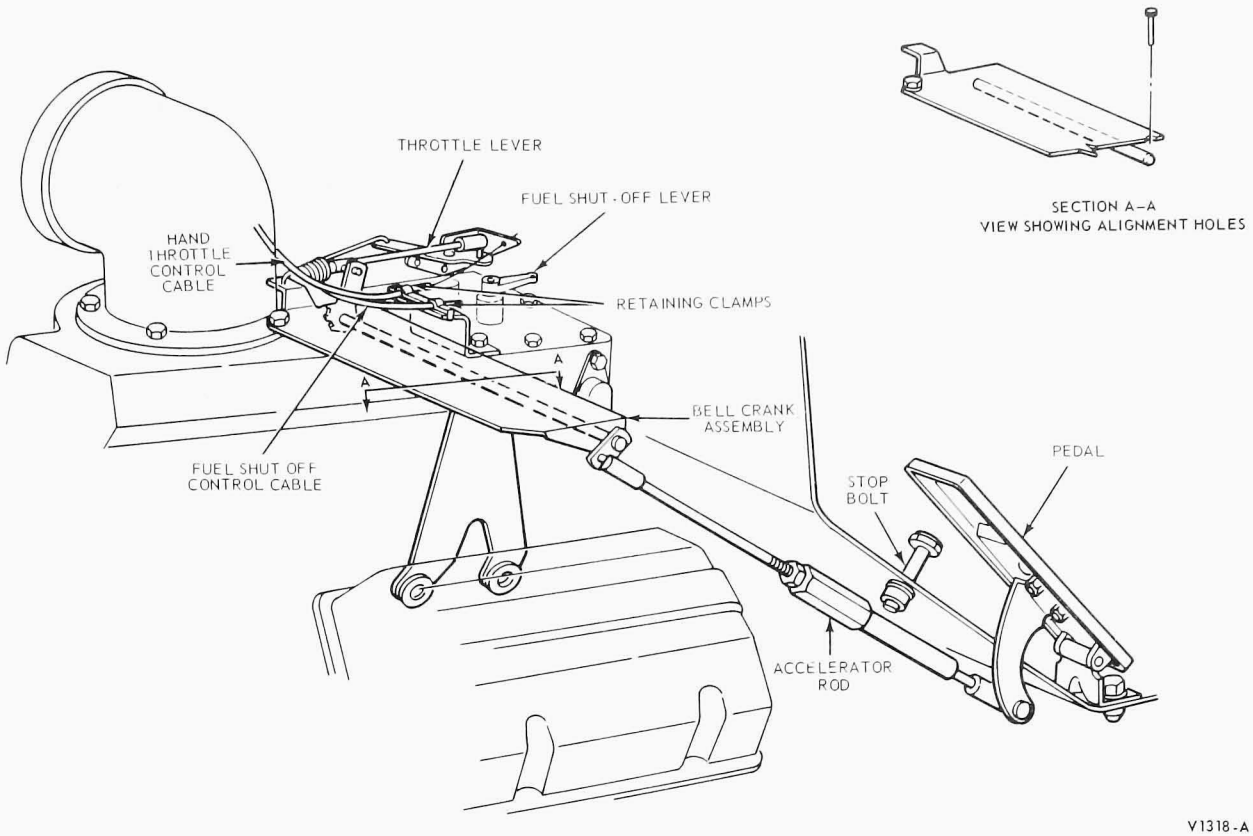

FIG. 9 Throttle Linkage—L-LN-LT-LNT 8000 Series with 6V-53 Diesel Engine

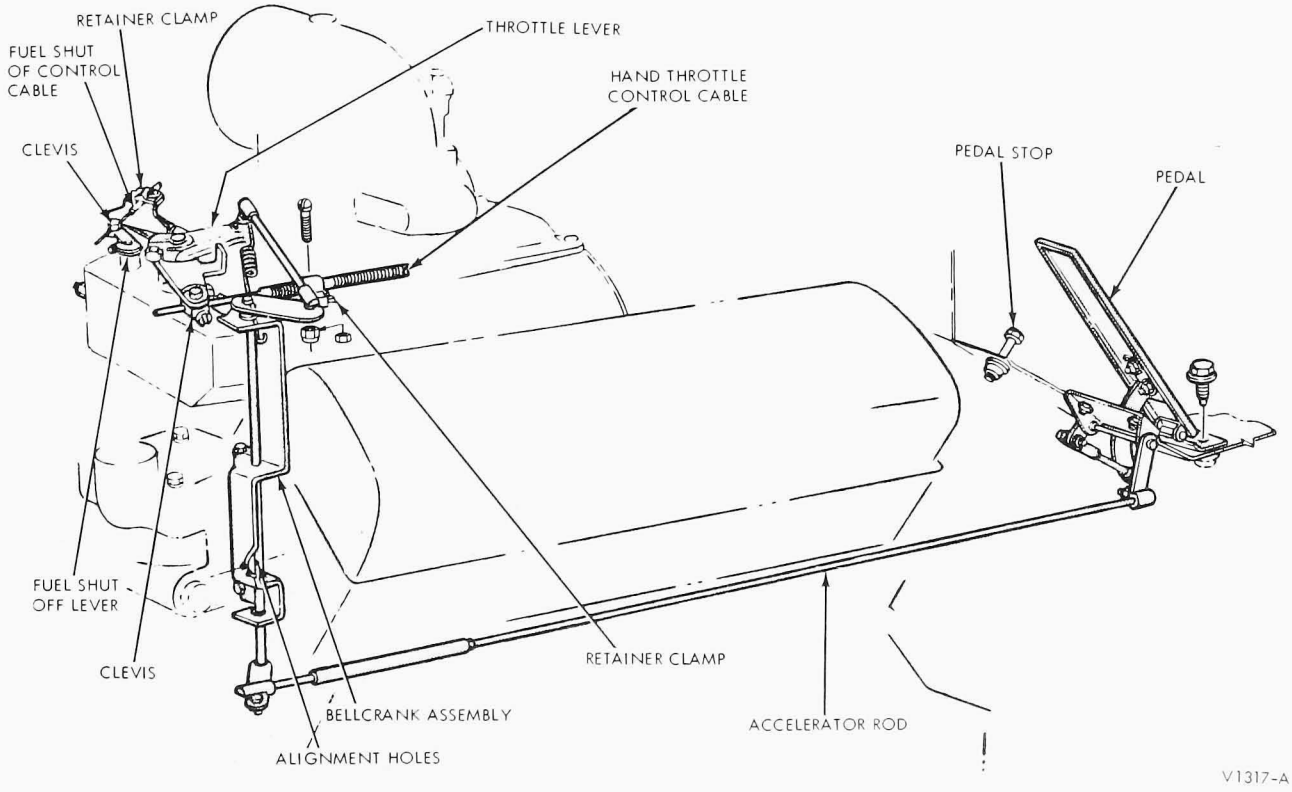

FIG. 10 Throttle Linkage—L-LT-9000 Series with 8V-71 Diesel Engine

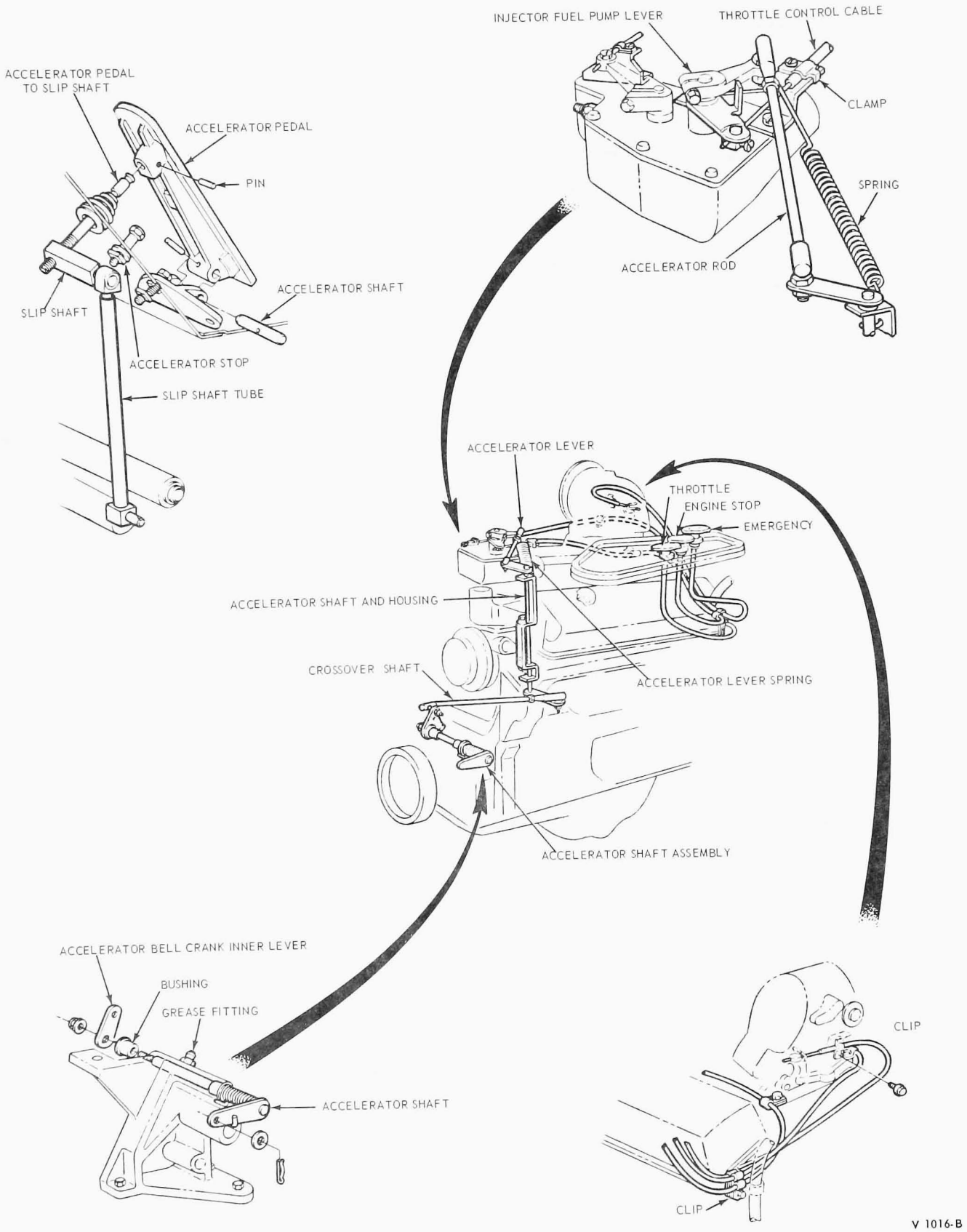

FIG. 11 Throttle Linkage—W and WT-9000 Series with 8V-71 Engines

Exhaust Systems

GROUP 26

PART 26-01	PAGE	PART 26-30	PAGE
General Exhaust System	26-01-01	Ford V-8 Diesel Exhaust System	26-30-01
PART 26-11		**PART 26-31**	
Six-Cylinder Single Exhaust System	26-11-01	Cummins Diesel Exhaust System	26-31-01
PART 26-21		**PART 26-32**	
V-8 Single Exhaust System	26-21-01	Detroit Diesel Exhaust System	26-32-01
PART 26-23			
V-8 Dual Exhaust System	26-23-01	SPECIFICATIONS	26-01-2

PART 26-01 General Exhaust System Service

COMPONENT INDEX	Page	COMPONENT INDEX	Page
EXHAUST SYSTEM		EXHAUST SYSTEM - Continued	
Adjustment	01-01	Description	01-01
Alignment	01-02	SPECIFICATIONS	01-02

DESCRIPTION

With the exception of super duty gasoline engines, a single exhaust system is used on all trucks with gasoline engines. Trucks with a super duty engine use a dual exhaust system.

The Y-type inlet pipe on V-8 engines may be either a one piece unit or a two piece assembly utilizing a crossover pipe extending to the left exhaust manifold outlet.

The exhaust systems used on the diesel engines vary between engine and truck models.

Illustrations given in the following parts of this Group show the components used for different applications.

The dual exhaust system used on Super Duty Engines consists of an inlet pipe, a muffler and an outlet pipe for each bank of the engine.

The location and type of exhaust system gaskets, retaining clamps and support brackets are shown in the respective exhaust system illustrations.

This Part covers general exhaust system alignment procedures and specifications.

For exhaust system component removal, disassembly, assembly and installation, refer to the latter parts of this Group.

Always refer to the Master Parts Catalog for parts usage and interchangeability before replacing a component part of the exhaust system.

ADJUSTMENTS

Inspect inlet pipes, outlet pipes and mufflers for cracked joints, broken welds and corrosion damage that would result in a leaking exhaust system. Inspect the clamps, brackets and insulators for cracks and stripped or badly corroded bolt threads. When pipe clamp(s) are loosened and/or removed to replace a pipe or muffler, replace the clamp(s) if there is reasonable doubt that its service lift is limited.

The exhaust system must be free of leaks, binding, grounding and excessive vibrations.

These conditions are usually caused by loose, broken or misaligned clamps, brackets or pipes. If any of these conditions exist, check the exhaust system components and alignment. Align or replace as necessary.

EXHAUST SYSTEM ALIGNMENT

The locations of components are given in the illustrations in the following Parts. Perform the following procedure to align the complete exhaust system.

1. Loosen the pipe connection clamps and the pipe support bracket clamps. Loosen the inlet pipe to exhaust manifold attaching nuts.
2. Torque the exhaust manifold to inlet pipe attaching nuts evenly and alternately to specifications so that the pressure on the gasket and inlet pipe flanges will be uniform on both sides.
3. Work from the front and progressively align the exhaust system components and clamps at the various pipe connections to relieve binds and displaced pipe connections. Then check the exhaust system for leaks.

SPECIFICATIONS

TORQUE LIMITS – EXHAUST SYSTEM BOLTS AND NUTS – GASOLINE AND DIESEL ENGINES (FT-LBS)

Description	Bolt or Nut Size	Torque Ft-Lbs
Bracket to Frame Cross-Member		
Light Trucks	3/8–16	18-25
Medium Trucks	3/8–16	15-21
Bracket to Frame Side Rail		
Light Trucks	5/16–18	10-14
	3/8–16	12-15
F-250 (4 x 4) & F-350	3/8–16	18-25
Medium Trucks	5/16–18	12-17
	3/8–16	15-21
Heavy Trucks	3/8–16	24-32
	7/16–14	38-52
	9/16–12	75-105
	5/16–18	9-12
Outlet Pipe U-Bolt and Clamp		
Light Trucks	3/8–16	25-35

Description	Bolt or Nut Size	Torque Ft-Lbs
Inlet Pipe to Exhaust Manifold		
Light Trucks	7/16-14	25-35
	3/8–16	25-30
Medium Trucks	3/8–16	20-29
	7/16–14	31-42
Heavy Trucks		
Gasoline	3/8–16	24-32
Diesel	3/8–16	20-29
	1/2–20	37-50
	1/2–13	37-50
Inlet Pipe U-Bolt and Clamp Light Trucks	3/8–16	25-35
Muffler Inlet Pipe Bracket to Engine		
Light Trucks	3/8–16	18-25
Heavy Trucks	3/8–16	15-21
	1/2–13	37-50
Outlet Pipe Clamps Light Trucks	3/8–16	12-15
	5/16–18	10-14
	32–9	7-11
Power Pack Exhaust Hanger U-Bolt and Clamp Light Trucks	5/16–18	6-9

UNLESS OTHERWISE SPECIFIED, THE FOLLOWING TORQUE RANGES ARE TO BE USED FOR FITTING OR FASTENER DIAMETERS AS INDICATED

BOLT OR NUT DIAMETER	TORQUE RANGE
5/16"	12-17 FT-LB
3/8"	31-42 FT-LB
7/16"	50-70 FT-LB
1/2"	75-105 FT-LB

CU1162-A

PART 26-11 Six-Cylinder Single Exhaust Systems

Applies To All Models

COMPONENT INDEX	Page
INLET PIPE	
Econoline and Bronco	
Removal and Installation	11-01
F100, 250, 350 and P-Series	
Removal and Installation	11-01
500-750 Series Trucks	
Removal and Installation	11-03
MUFFLER	
Econoline and Bronco	
Removal and Installation	11-06
F100, 250, 350 and P-Series	
Removal and Installation	11-06
MUFFLER – Contd.	
500-750 Series Trucks	
Removal and Installation	11-06
OUTLET PIPE	
Econoline and Bronco	
Removal and Installation	11-06
F100, 250, 350 and P-Series	
Removal and Installation	11-06
500-750 Series Trucks	
Removal and Installation	11-06
SPECIFICATIONS	01-02

REMOVAL AND INSTALLATION

Brackets, clamps and insulators should be replaced if they are damaged or badly corroded. Do not attempt to repair these parts.

INLET PIPE

ECONOLINE AND BRONCO

Removal

If the inlet pipe is being replaced for the first time and it is still welded to the muffler proceed as follows:

1. Raise the vehicle.
2. Loosen the outlet pipe retaining clamp at the rear support bracket (Figs. 1 and 2).
3. Temporarily support the outlet pipe with soft wire.
4. Remove the clamp securing the muffler to the outlet pipe and separate the outlet pipe from the muffler.
5. Disconnect the front support bracket on the inlet pipe.
6. Remove the attaching nuts securing the inlet pipe to the exhaust manifold.
7. Remove the muffler and inlet pipe assembly from the vehicle.
8. Discard the inlet pipe to manifold gasket.

Remove a separate inlet pipe as follows:

1. Raise the vehicle.
2. Remove the attaching nuts securing the inlet pipe to the exhaust manifold.
3. Remove the clamp securing the inlet pipe to the front support bracket.
4. Remove the clamp securing the inlet pipe to the muffler.
5. Temporarily support the muffler and outlet pipe with soft wire.
6. Slide the inlet pipe forward and separate the pipe from the muffler.
7. Discard the gasket.

Installation

If the inlet pipe being replaced was welded to the muffler, first install a replacement muffler as described under Muffler Installation.

1. Clean the gasket surfaces on the inlet pipe flange and exhaust manifold. Position a new gasket on the inlet pipe.
2. Position the inlet pipe to the muffler and loosely install the retaining clamp.
3. Position the inlet pipe in the exhaust manifold and front support bracket.
4. Loosely install the inlet pipe flange and front support bracket clamp.
5. Torque all attaching nuts to the specifications in Part 26-01.
6. Start the engine and check the exhaust system for leaks.
7. Lower the vehicle.

F-100, 250, 350 AND P-SERIES

The typical six cylinder single exhaust systems are shown in Figs. 3, 4 and 5.

Removal

1. Loosen the outlet pipe clamps; then slide the outlet pipe (except cab models) toward the rear.
2. Loosen the inlet pipe and muffler retaining clamp.

Temporarily support the muffler and inlet pipe in position with soft wire.

3. Remove the inlet pipe to manifold attaching nuts; then remove the wire and pull the inlet pipe and muffler assembly away from the manifold. Remove the gasket and inlet pipe.
4. Separate the inlet pipe from the muffler if the muffler is still serviceable. On F-Series trucks, the production muffler and inlet pipe is a one-piece assembly. In service, however, both parts are replaced individually. If the inlet pipe being

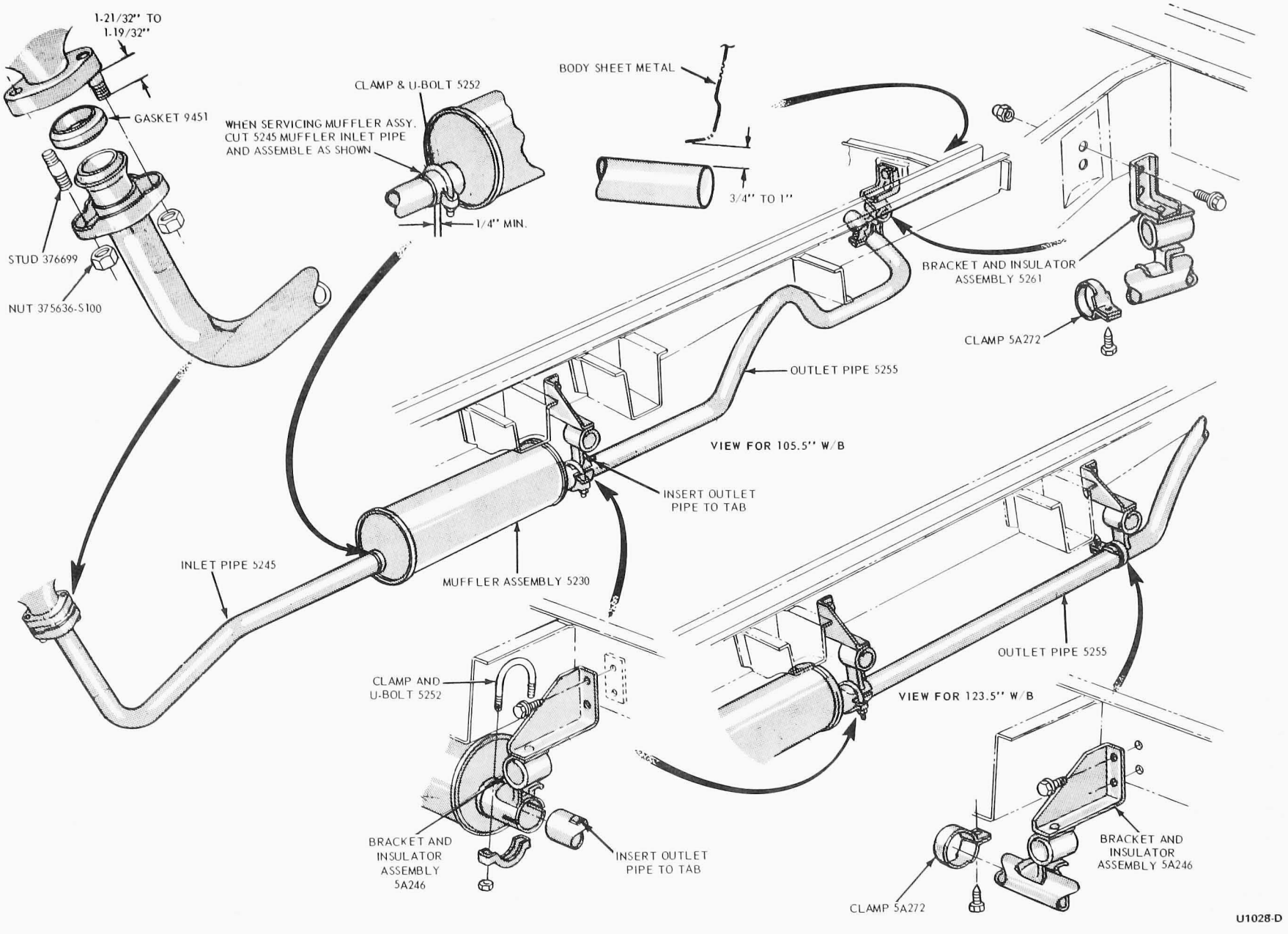

FIG. 1 Econoline Six-Cylinder Exhaust System

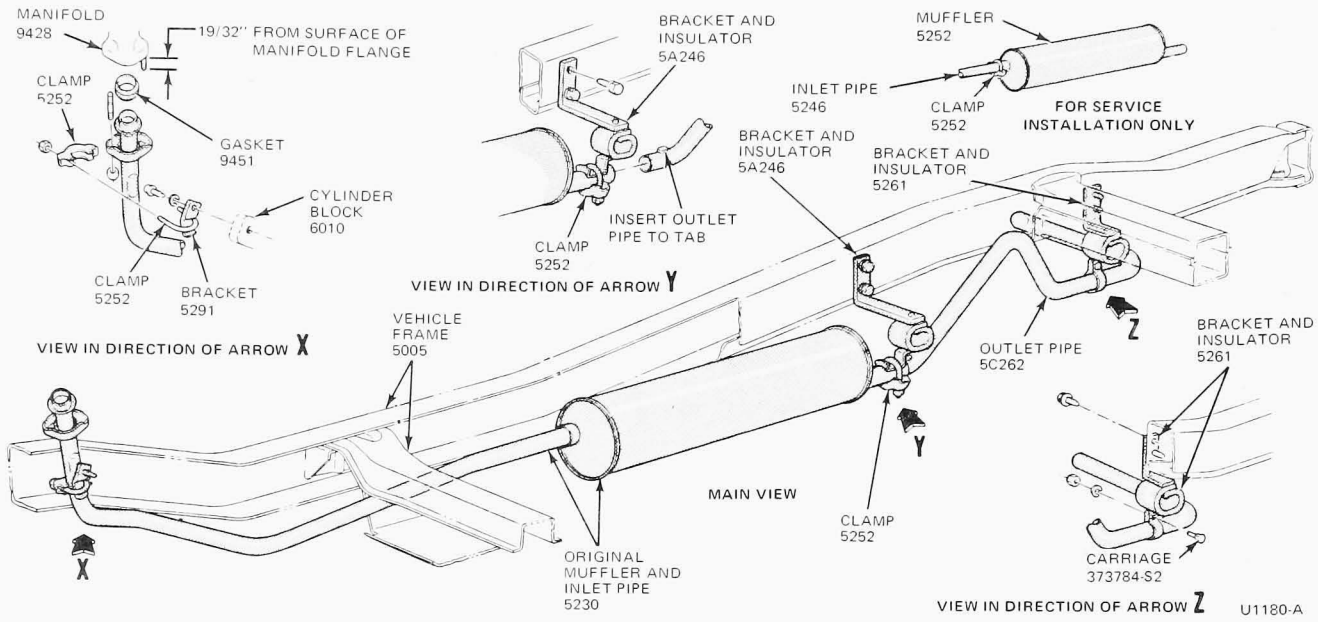

FIG. 2 Bronco Six-Cylinder Exhaust System

replaced still has the welded-on muffler, replace both components.

5. Clean the exhaust manifold flange. Replace any damaged or worn exhaust system parts.

Installation

1. Position the new gasket and inlet pipe to the exhaust manifold. Install the attaching nuts and, alternately and evenly, torque them to specifications.
2. Position the front support bracket and clamp between the inlet pipe and frame side rail. Do not tighten the attaching nuts.
3. Install the inlet pipe to support bracket clamp (if so equipped) and loosely install the attaching nut. On other models support the inlet pipe with soft wire.
4. Position the muffler and outlet pipe in place, loosely installing the clamp(s) attaching nuts.
5. Align the exhaust system and, torque the remaining attaching nuts to the specifications shown in Part 26-01.
6. Check the exhaust system for leaks.

500-750 SERIES TRUCKS

Exhaust systems are shown in Figs. 6, 7, 8 and 9.

Removal

On some trucks the production muffler and inlet pipe (or inlet pipe extension) is a one-piece assembly. In service, however, the parts are replaced individually. If the inlet pipe being replaced still has the welded-on muffler, replace both components.

1. Remove or slide forward the inlet pipe (or extension pipe) to muffler clamp (if so equipped).
2. Separate the inlet pipe and muffler. On some models it may be necessary to loosen the muffler and outlet pipe clamps and slide the muffler rearward to gain clearance for removal.
3. Remove the support bracket clamp securing the inlet pipe to the frame (if so equipped).
4. Remove the inlet-to-inlet pipe extension clamp (if so equipped). Remove the attaching nuts securing the inlet pipe to the exhaust manifold.
5. Remove the inlet pipe from the vehicle.
6. Discard the inlet pipe flange gasket

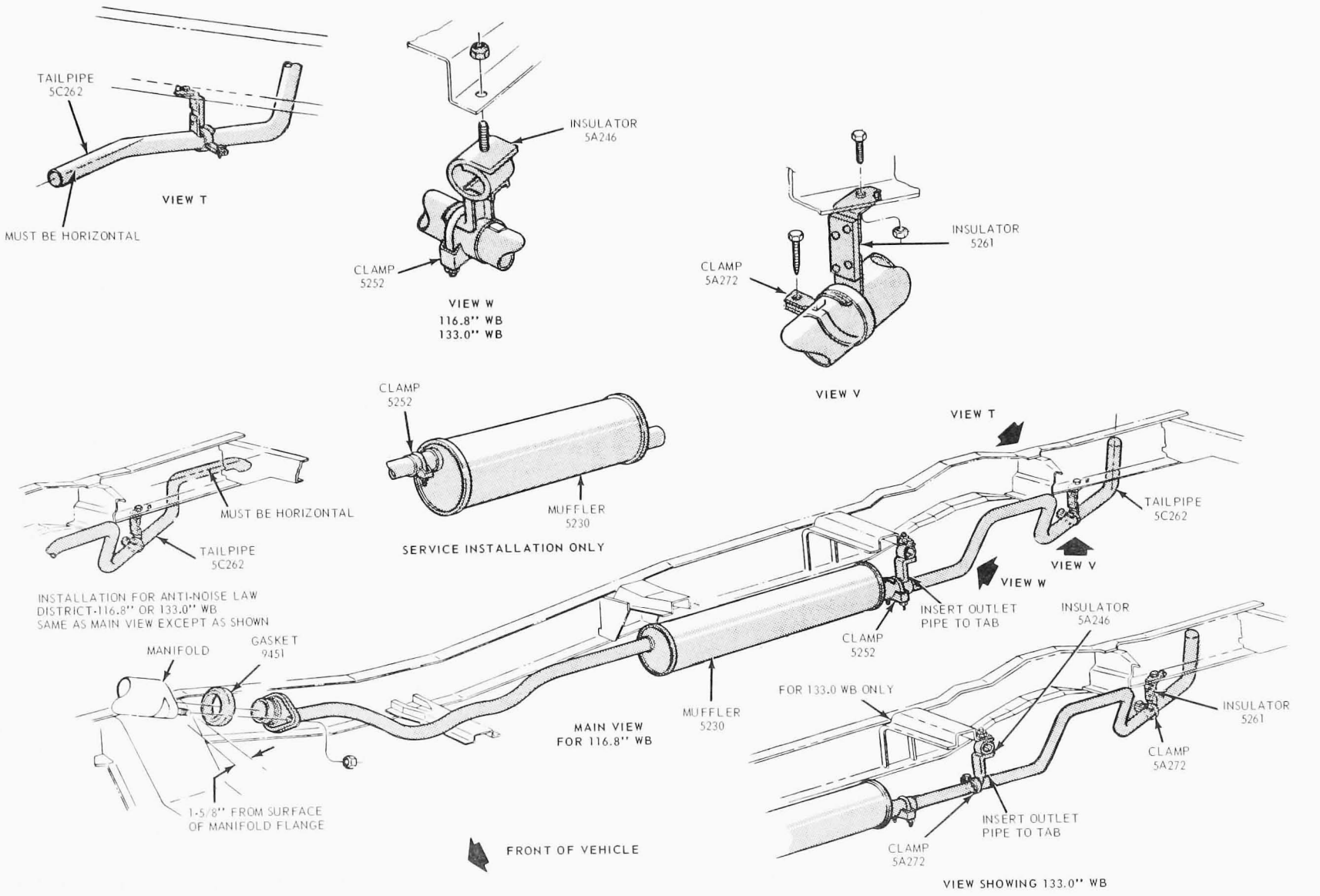

FIG. 3 F-100, 250 Series Six-Cylinder Single Exhaust System

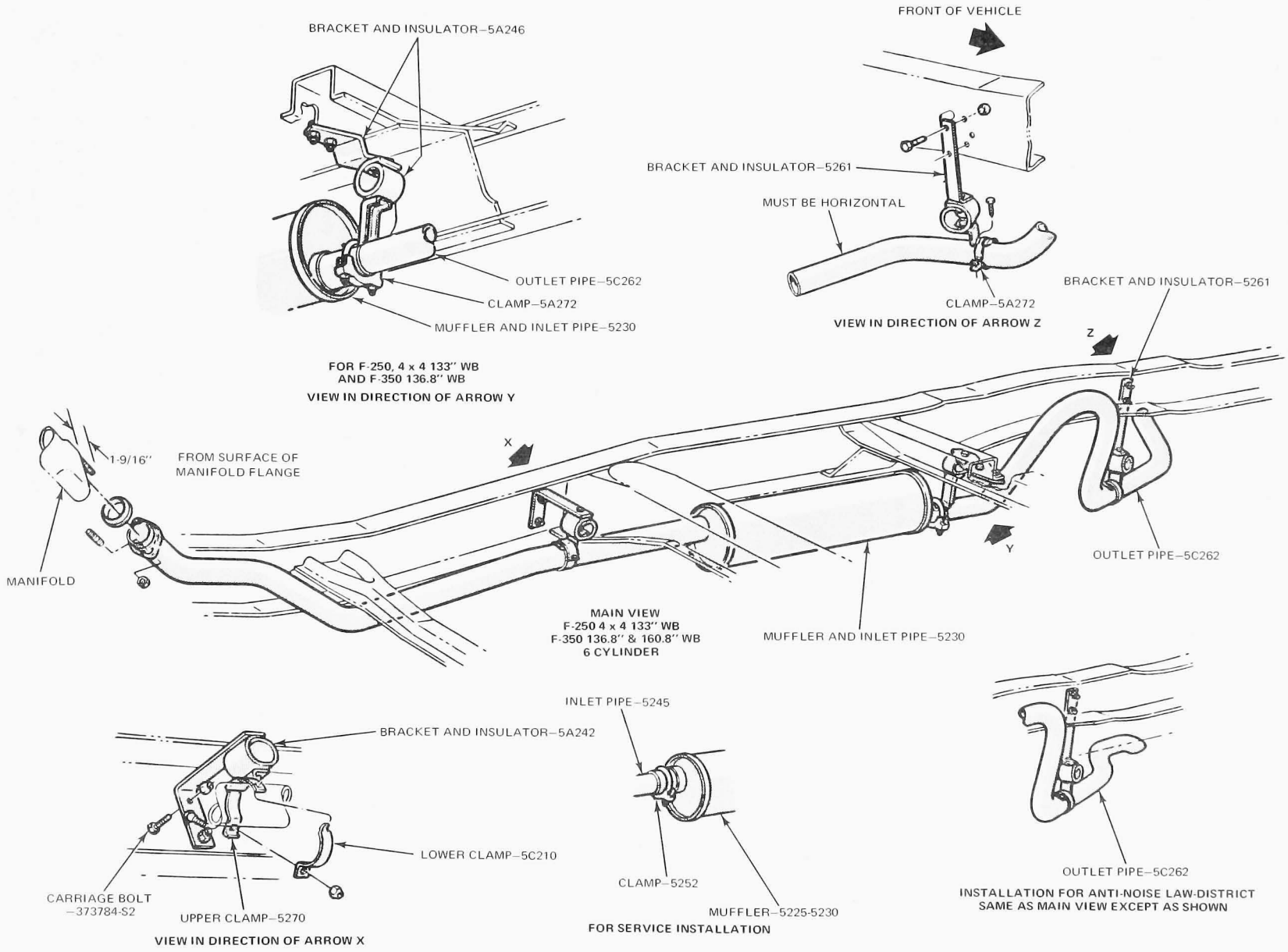

U1179-B

FIG. 4 F-250 (4 x 4) and F-350 Six-Cylinder Single Exhaust System

and clean the exhaust manifold flange.

Installation

1. Position a new service inlet pipe and new gasket on the exhaust manifold and into the muffler. If equipped with an inlet pipe extension, position it between the inlet pipe and muffler.
2. Install the inlet pipe to manifold attaching nuts and tighten alternately and evenly to the torque shown in the specifications in Part 26-01.
3. Install the inlet pipe to muffler clamp and support bracket clamp (if so equipped).
4. Adjust the exhaust system and torque all clamp and bracket attaching nuts to specifications.
5. Check the exhaust system for leaks.

MUFFLER

ECONOLINE AND BRONCO

Removal

1. Raise the vehicle.
2. Loosen the retaining clamp securing the outlet pipe to the rear support bracket (Fig. 1 or 2).
3. Remove the retaining clamp securing the outlet pipe to the muffler.
4. Separate and slide the outlet pipe rearward from the muffler.
5. If the muffler is being replaced for the first time and is welded to the inlet pipe, proceed as follows: support the rear of the muffler. Cut the inlet pipe as close as possible to the muffler. Discard the muffler.
6. Separate the inlet pipe from the muffler and remove the muffler from the vehicle.

Installation

1. Position the muffler to the inlet pipe and loosely install the retaining clamp (Fig. 1 or 2).
2. Position the muffler to the outlet pipe and loosely install the retaining clamp.
3. Adjust the exhaust system and torque the clamp attaching nuts to the specifications shown in Part 26-01.
4. Start the engine and check the system for leaks.
5. Lower the vehicle.

F-100, 250, 350 AND P-SERIES

Removal

1. Remove the muffler to outlet pipe retaining clamp (Fig. 3, 4 or 5). Loosen the outlet pipe retaining clamp(s).
2. Separate the muffler from the outlet pipe and slide the outlet pipe rearward.
3. Remove the inlet pipe to muffler clamp. On F-Series trucks, if the muffler has not been removed previously, cut the inlet flange of the muffler with a hacksaw to separate it from the inlet pipe. **Make the cut as close to the muffler as possible.**
4. Separate the muffler from the inlet pipe and remove it from the vehicle.

Installation

1. Install the retaining clamp on the inlet pipe. Position a new service muffler on the inlet pipe.
2. Position the outlet pipe and clamps on the muffler.
3. Align the exhaust system and tighten the clamps and support clamp bracket attaching nuts to the specification in Part 26-01.
4. Check the exhaust system for leaks.

500-750 SERIES TRUCKS

Removal

1. Remove or slide rearward the muffler to outlet pipe clamp (Fig. 6, 7, 8 or 9).
2. Loosen the other outlet pipe clamps.
3. Separate the muffler from the outlet pipe.
4. Remove the inlet pipe to muffler clamp and separate the muffler from the pipe. For initial replacement on a truck with a one-piece muffler inlet pipe, cut the inlet flange of the muffler with a hacksaw and remove the muffler. **Make the cut as close to the muffler as possible.**

Installation

1. Install the retaining clamp(s) on the inlet pipe. Position a new service muffler on the inlet pipe.
2. Position the outlet pipe and clamp on the muffler.
3. Align the exhaust system and tighten the clamps and support clamp bracket attaching nuts to the specifications in Part 26-01.

OUTLET PIPE

ECONOLINE AND BRONCO

Removal

1. Raise the vehicle.
2. Remove the clamps securing the outlet pipe to the muffler and support brackets (Fig. 1 or 2).
3. Separate the outlet pipe from the muffler and remove from the vehicle.

Installation

1. Position the outlet pipe to the muffler and support bracket at the rear of the vehicle and approximately 1 1/4 inches below the body sheet metal (also the intermediate support bracket on the Econoline Supervan models).
2. Install the retaining clamps to hold the outlet pipe in position.
3. Align the system and torque the retaining clamp nuts to the specifications shown in Part 26-01.
4. Start the engine and check the exhaust system for leaks.
5. Lower the vehicle.

F-100, 250, 350 AND P-SERIES

Removal

1. Remove the outlet pipe clamp at the muffler (Fig. 3, 4 or 5). Remove the outlet pipe support bracket clamps (if so equipped). Separate the outlet pipe from the muffler.
2. Replace any damaged or worn parts.

Installation

1. Position the muffler clamp on the new outlet pipe, then slide the pipe on the muffler. Install, but do not tighten, the support clamps (if so equipped).
2. Adjust the exhaust system and tighten the outlet pipe clamp and support bracket clamp attaching nuts to the specifications in Part 26-01 (if so equipped).
3. Check the exhaust system for leaks.

500-750 SERIES TRUCKS

Removal

1. Remove or loosen and slide rearward the outlet pipe clamp at the muffler (Fig. 6, 7, 8 or 9). Remove the outlet pipe support bracket clamps (if so equipped). Separate the outlet pipe from the muffler.

   If the truck is equipped with a muffler outlet pipe extension, loosen the retaining clamp(s) and remove from the outlet pipe.
2. Replace any damaged or worn parts.

Installation

1. Position the muffler clamp on the outlet pipe, then slide the pipe onto the muffler. Install, but do not tighten, the support clamps (if so equipped).

   If the truck is equipped with a muffler outlet pipe extension, position the retaining clamp on the outlet pipe. Slide the pipe extension onto the outlet pipe and tighten the retaining clamp.
2. Align the exhaust system and tighten the outlet pipe clamp and support bracket clamp attaching nuts (if so equipped) to the specifications in Part 26-01.
3. Check the exhaust system for leaks.

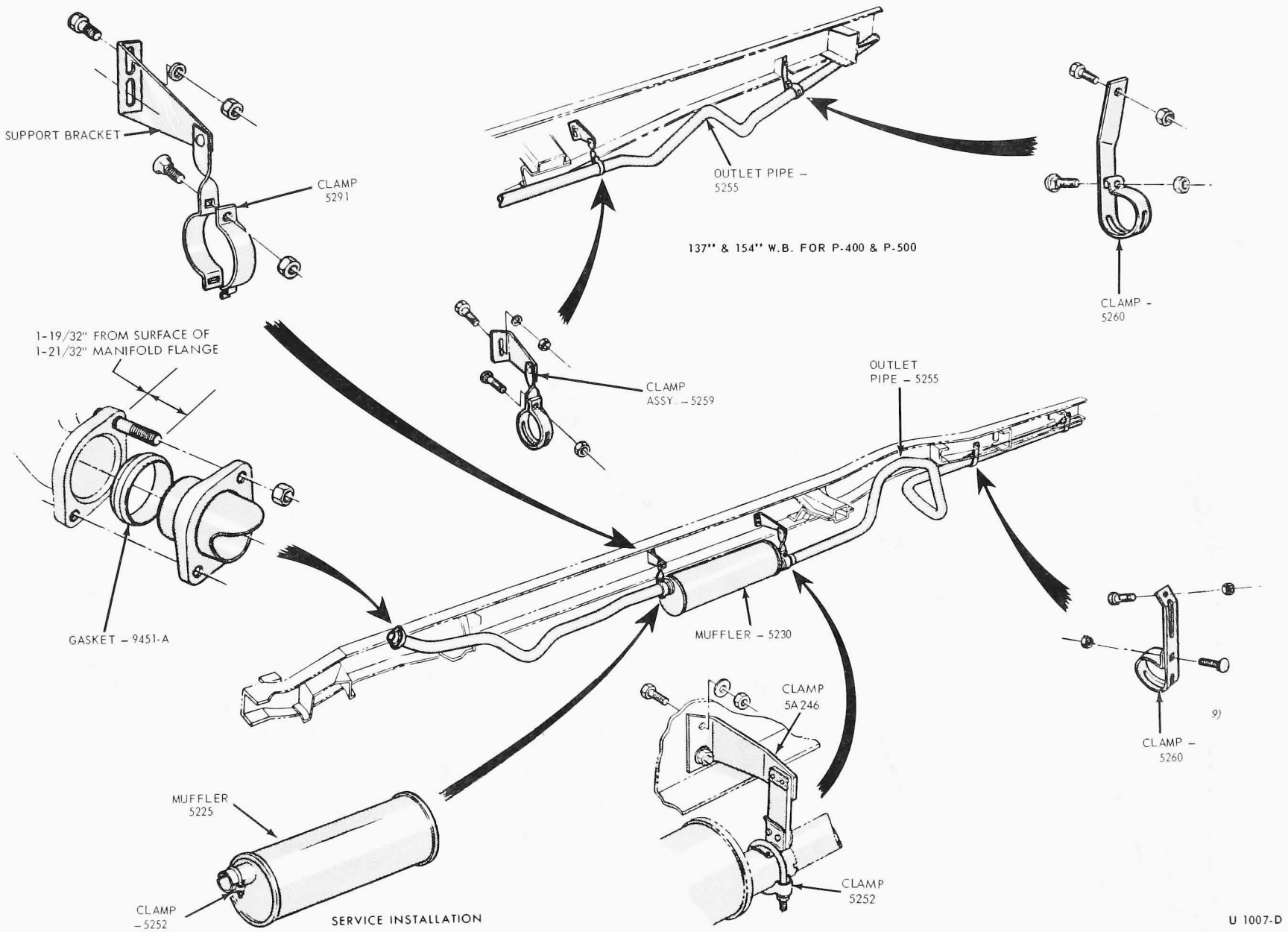

FIG. 5 P-350-500 Series Six-Cylinder Single Exhaust System

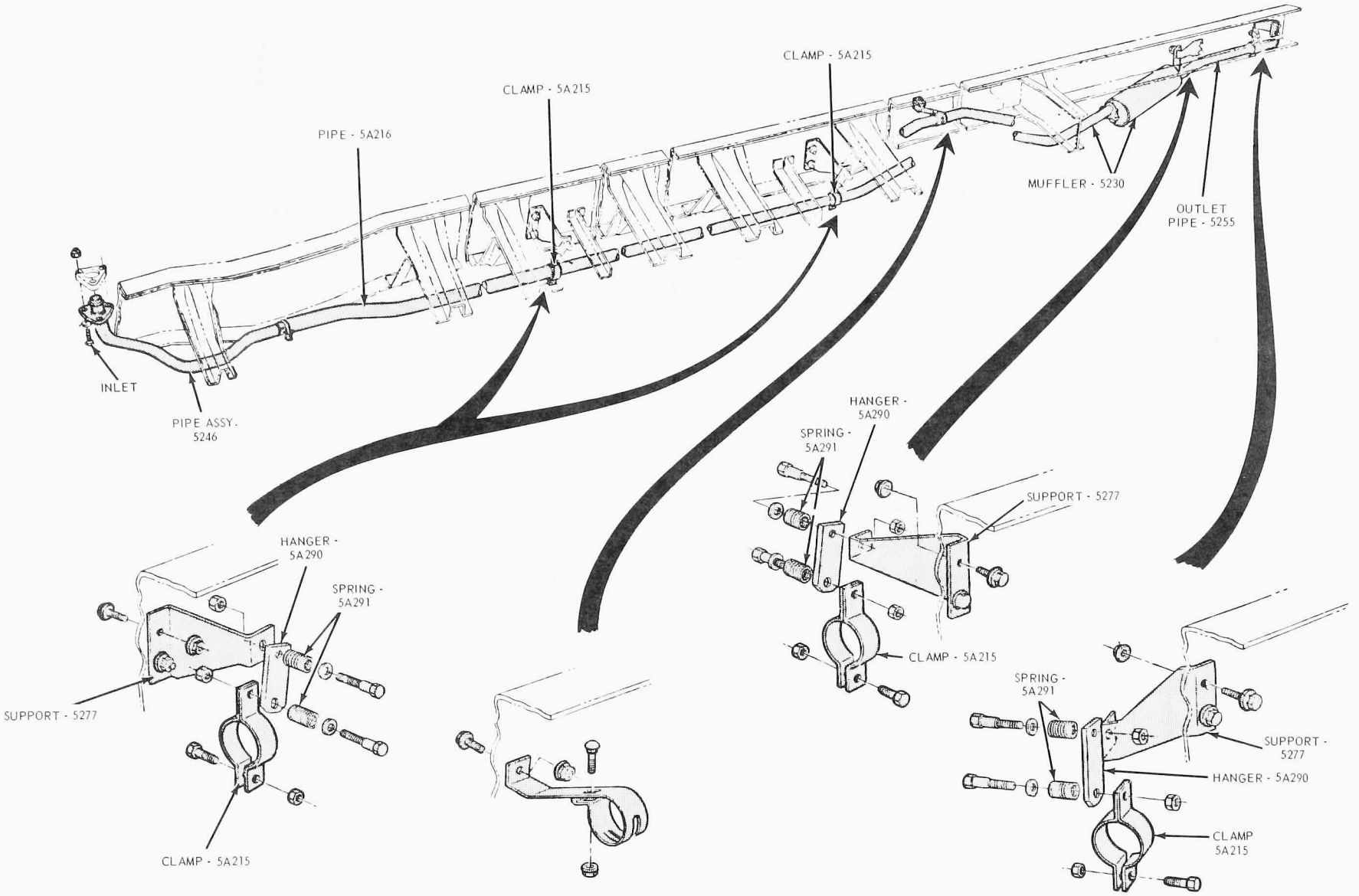

FIG. 6 B-600-750 Series Six-Cylinder Single Exhaust System

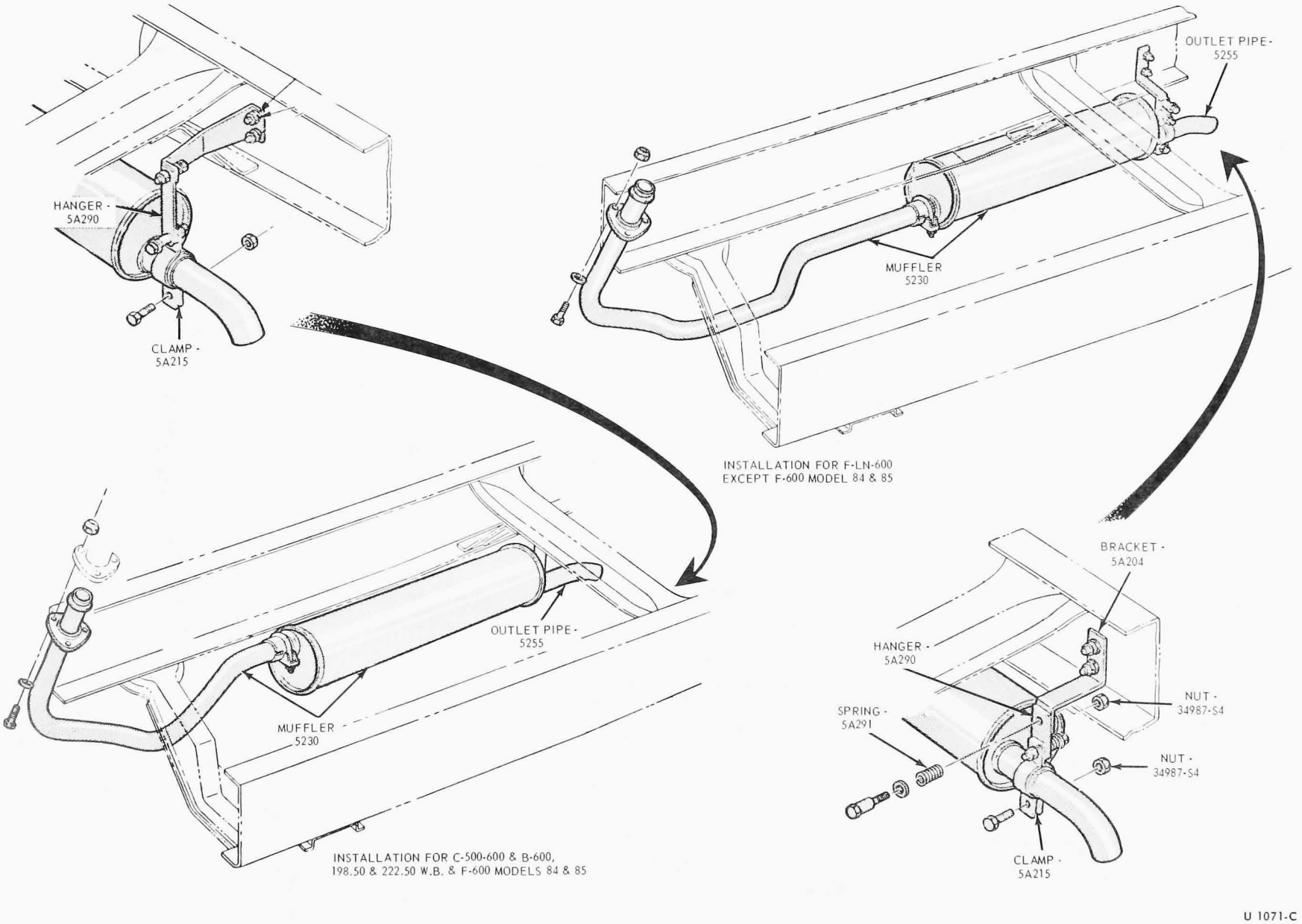

FIG. 7 C-500, F, LN, C-600 and B-600 (198.5 and 222.5 inch wheelbase) Six-Cylinder Single Exhaust System

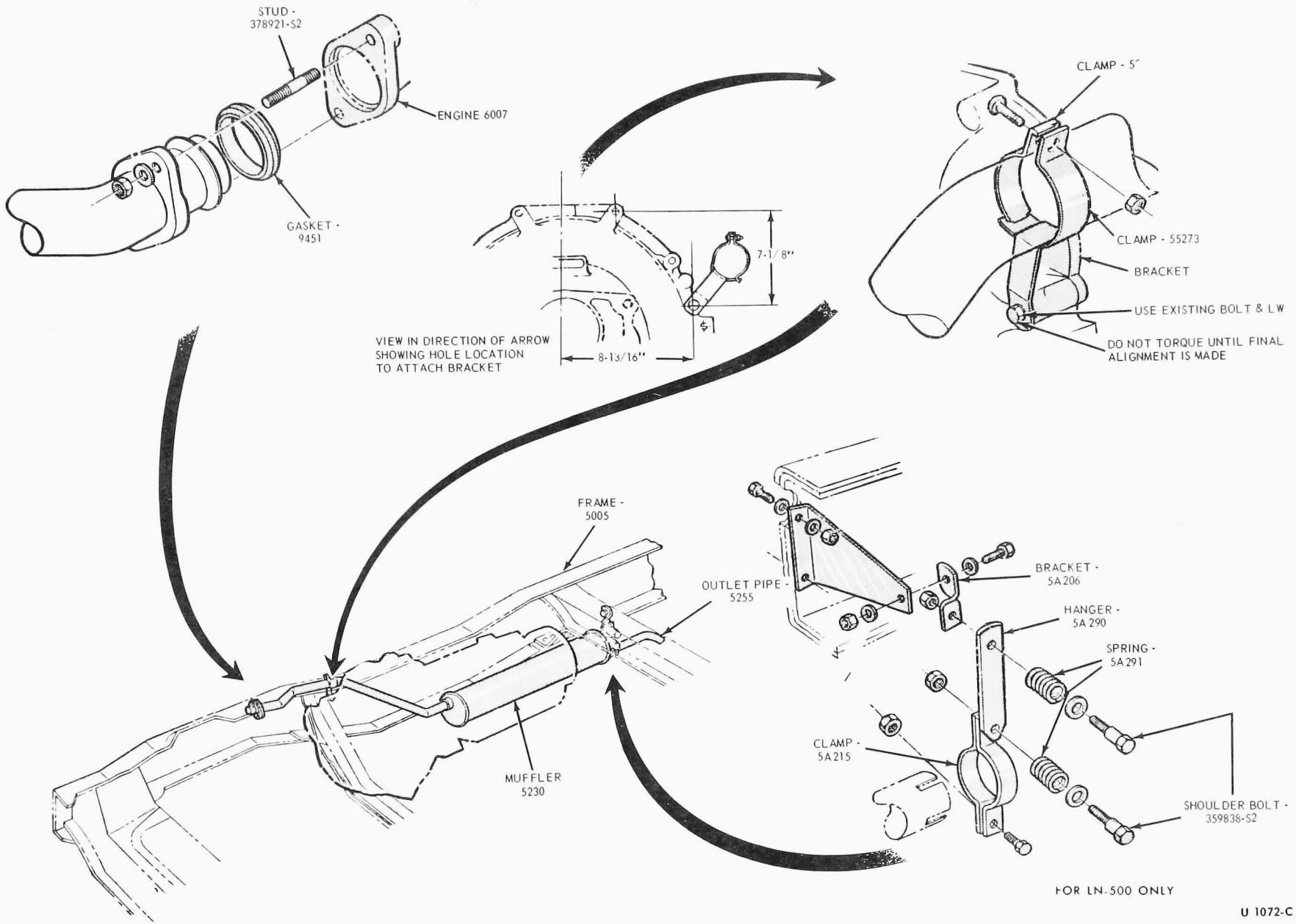

FIG. 8 F-, LN-and B-500 Series Six-Cylinder Single Exhaust System

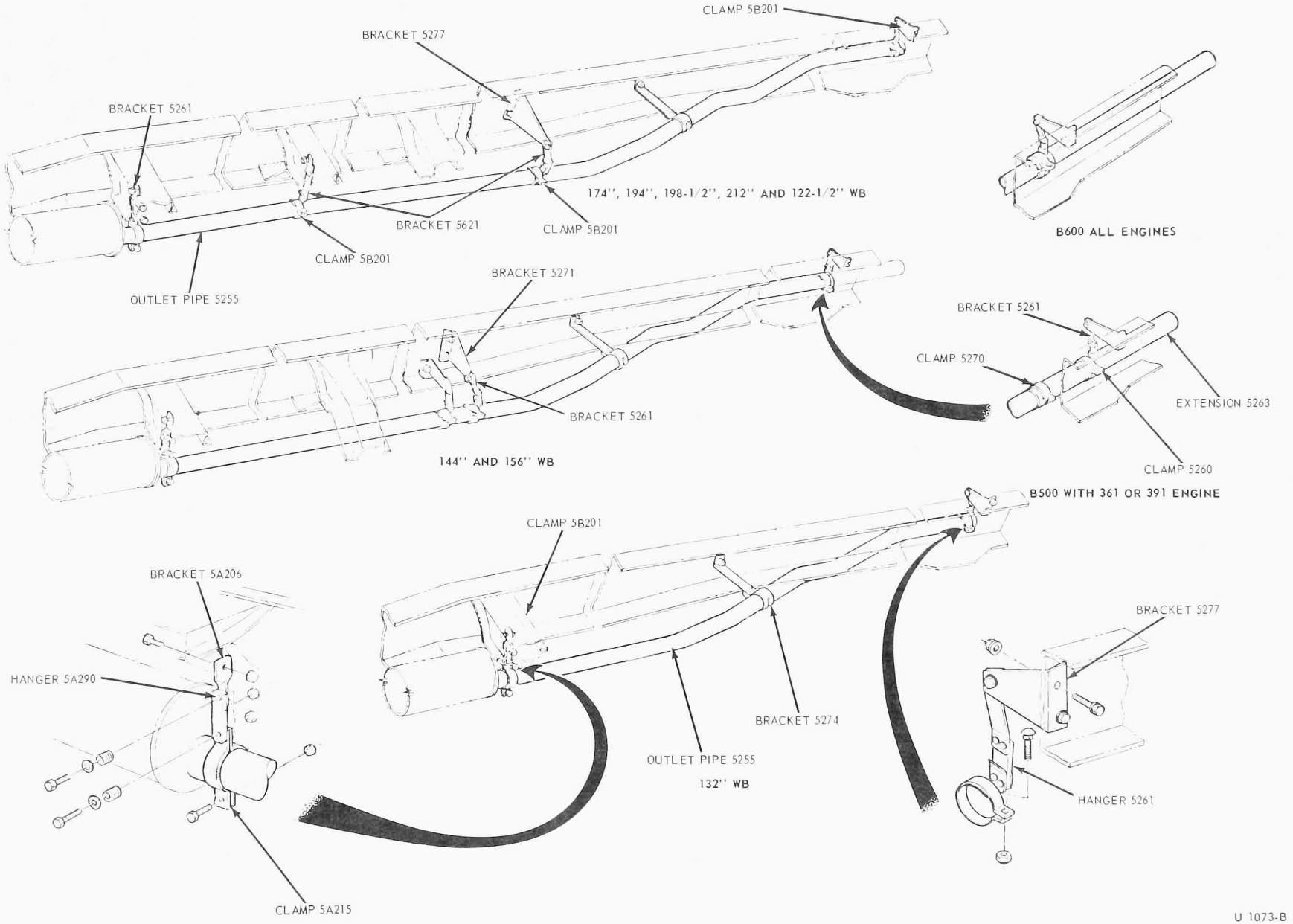

FIG. 9 F-500-750, B-500 and B-600 (198.5 and 222.5 inch wheelbase) Cowl Model Muffler Outlet Pipes— Six-Cylinder Single Exhaust System

PART 26-21 V-8 Single Exhaust Systems

Applies to Bronco, Econoline, F100, 250 and 300 and 600 thru 900

COMPONENT INDEX	Page	COMPONENT INDEX	Page
INLET PIPE		OUTLET PIPE	
Removal and Installation	21-01	Removal and Installation	21-01
MUFFLER			
Removal and Installation	21-01	SPECIFICATIONS	01-02

Brackets, clamps and insulators should be replaced if they are damaged or badly corroded. Do not attempt to repair these parts.

INLET PIPE—EIGHT-CYLINDER BRONCO MODELS

Removal

If the inlet pipe is being replaced for the first time and is still welded to the muffler proceed as follows:

1. Remove the attaching nuts securing the inlet pipe to the exhaust manifold.
2. Loosen the outlet pipe retaining clamp at the rear support bracket (Fig. 1).
3. Temporarily support the outlet pipe with soft wire.
4. Remove the clamp securing the muffler to the outlet pipe and separate the outlet pipe from the muffler.
5. Remove the attaching nuts securing the inlet pipe and crossover pipe to the exhaust manifolds.
6. Remove the muffler and inlet pipe assembly from the vehicle.
7. Discard the inlet pipe and crossover pipe to manifold gaskets.

Installation

If the inlet pipe being replaced was welded to the muffler, first install a replacement muffler as described under Muffler Installation.

1. Clean the gasket surfaces on the exhaust manifolds and the inlet pipe flanges.
2. Position new gaskets on the inlet pipe flanges.
3. Position the inlet pipe to the exhaust manifolds and loosely install the attaching nuts.
4. Slip the front end of the muffler into place over the inlet pipe and install but, do not tighten the clamp.
5. Slip the outlet pipe into place on the muffler and install the clamp.
6. Align the exhaust system then, tighten all attaching nuts to the specifications shown in Part 26-01.
7. Start the engine and check the exhaust system for leaks.
8. Lower the vehicle.

INLET PIPE—EIGHT-CYLINDER ECONOLINE MODELS

Removal

1. Raise the vehicle.
2. Loosen the clamps securing the muffler and outlet pipe to the support brackets (Fig. 2).
3. Remove the clamp securing the inlet pipe to the muffler.
4. Separate the inlet pipe from the muffler and slide the outlet pipe and muffler rearward.
5. Disconnect and remove the inlet pipe from the exhaust manifolds.

Installation

1. Clean the inlet pipe flanges on the exhaust manifold.
2. Place new gaskets on the inlet pipe flanges. Position the inlet pipe in the muffler and on the exhaust manifolds.
3. Loosely install the exhaust manifold to inlet pipe attaching nuts.
4. Align the exhaust system and torque all attaching nuts to the specifications in Part 26-01.
5. Start the engine and check the exhaust system for leaks.
6. Lower the vehicle.

MUFFLER—BRONCO AND ECONOLINE

Removal

1. Raise the vehicle.
2. Loosen the retaining clamp(s) securing the outlet pipe to the rear support bracket(s) (Figs. 1 or 2).
3. Remove the retaining clamp securing the outlet pipe to the muffler.
4. Separate and slide the outlet pipe rearward from the muffler.
5. Remove the clamp securing the inlet pipe to the muffler.
6. Separate the inlet pipe from the muffler and remove the muffler from the vehicle.

Installation

1. Position the muffler to the inlet pipe and loosely install the retaining clamp.
2. Position the muffler to the outlet pipe and loosely install the retaining clamp.
3. Align the exhaust system and torque the clamp attaching nuts to the specifications shown in Part 25-01.
4. Start the engine and check the system for leaks.
5. Lower the vehicle.

OUTLET PIPE-BRONCO AND ECONOLINE

Removal

1. Raise the vehicle.
2. Remove the clamps securing the outlet pipe to the muffler and support brackets (Figs. 1 or 2).
3. Separate the outlet pipe from the muffler and remove from the vehicle.

Installation

1. Position the outlet pipe to the muffler and support bracket at the rear of the vehicle and approximately 1 1/4 inches below the body sheet metal. (Also the intermediate support bracket on the Econoline Supervan models).
2. Install the retaining clamps to hold the outlet pipe in position.
3. Align the system and torque the retaining clamp nuts to the specifications shown in Part 26-01.
4. Start the engine and check the exhaust system for leaks.
5. Lower the vehicle.

EXHAUST SYSTEM—F-100, 250-, 350

The typical exhaust systems are shown in Figs. 3 and 4.

The following procedures apply to 8-cylinder engine single exhaust systems.

INLET PIPE

Removal

1. Loosen the outlet pipe clamps; then, slide the outlet pipe (all except cab models) toward the rear.
2. Temporarily support the muffler and inlet pipe in position with soft wire.
3. Remove the inlet pipe to manifold attaching nuts; then, remove the wire and pull the inlet pipe and muffler assembly away from the manifolds. Remove the flange gaskets.
4. Separate the inlet pipe from the muffler if the muffler is still serviceable. On F-Series trucks the production muffler and inlet pipe is a one-piece assembly. In service however, both parts are replaced individually. If the inlet pipe being replaced still has the welded on muffler, replace both components.
5. Clean the exhaust manifold flanges. Remove any damaged or worn exhaust system parts.

Installation

1. Position the new gaskets and inlet pipe and cross-over pipe on the exhaust manifolds. Install the attaching nuts and alternately and evenly torque to specifications in Part 26-01.
2. Position the front support bracket and clamp between the inlet pipe and frame side rail. Do not tighten the attaching nuts.
3. Install the inlet pipe to support bracket clamp (if so equipped) and loosely install the attaching nut. On other models support the inlet pipe with soft wire.
4. Position the muffler and outlet pipe in place, loosely installing the clamp(s) attaching nuts.
5. Align the exhaust system and, torque the remaining attaching nuts to the specifications in Part 25-01.
6. Check the exhaust system for leaks.

MUFFLER

Removal

1. Remove the muffler to outlet pipe retaining clamp (Figs. 3 or 4). Loosen the outlet pipe retaining clamp(s).
2. Separate the muffler from the outlet pipe and slide the outlet pipe rearward.
3. Remove the inlet pipe to muffler clamp. On F-Series trucks if the original muffler has not been removed, cut the inlet flange of the muffler with a hacksaw to separate it from the inlet pipe. **Make the cut as close to the muffler as possible.**

Separate the muffler from the inlet pipe and remove from the vehicle.

Installation

1. Install the retaining clamp on the inlet pipe. Position a new service muffler on the inlet pipe.
2. Position the outlet pipe and clamps on the muffler.
3. Align the exhaust system and tighten the clamps and support clamp bracket attaching nuts to the specification in Part 26-01.
4. Check the exhaust system for leaks.

OUTLET PIPE

Removal

1. Remove the outlet pipe clamp at the muffler (Figs. 3 or 4). Remove the outlet pipe support bracket clamps (if so equipped). Separate the outlet pipe from the muffler.
2. Replace any badly damaged or worn parts.

Installation

1. Position the muffler clamp on the new outlet pipe, then slide the pipe on the muffler. Install, but do not tighten, the support clamps (if so equipped).
2. Align the exhaust system and tighten the outlet pipe clamp and support bracket clamp attaching nuts to the specifications in Part 26-01 (if so equipped).
3. Check the exhaust system for leaks.

EXHAUST SYSTEM—500-900 SERIES TRUCKS

Typical V-8 single exhaust systems are shown in Figs. 5 thru 8.

INLET PIPE

Removal

On some trucks the production muffler and inlet pipe (or inlet pipe extension) is a one-piece assembly. In service, however, both parts are replaced individually. If the inlet pipe being replaced still has the welded-on muffler, replace both components.

1. Remove or slide forward the inlet pipe (or extension pipe) to muffler clamp (if so equipped).
2. Separate the inlet pipe and muffler. On some models it may be necessary to loosen the muffler and outlet pipe clamps and slide the muffler rearward to gain removal clearance.
3. Remove the support bracket clamp(s) securing the inlet pipe to the frame (if so equipped).
4. Remove the inlet-to-inlet pipe extension clamp (if so equipped). Remove the attaching nuts securing the inlet pipe to the exhaust manifolds.
5. Remove the inlet pipe from the vehicle.
6. Remove the inlet pipe flange gaskets and clean the exhaust manifold flanges.

Installation

1. Position a new service inlet pipe and new gaskets on the exhaust manifolds and into the muffler. If equipped with an inlet pipe extension, position it between the inlet pipe and muffler.
2. Install the inlet pipe to manifold attaching nuts and tighten alternately and evenly to the torque shown in the specifications in Part 26-01.
3. Install the inlet pipe to muffler clamp and support bracket clamp(s) (if so equipped).
4. Adjust the exhaust system and torque all clamp and bracket attaching nuts to specifications.
5. Check the exhaust system for leaks.

MUFFLER

Removal

1. Remove or slide the muffler to outlet pipe clamp rearward (Figs. 5 thru 8).
2. Loosen the other outlet pipe clamps.
3. Separate the muffler from the outlet pipe.
4. Remove the inlet pipe to muffler clamp and separate the muffler from the pipe. For initial replacement on the truck with a one-piece muffler inlet pipe cut the inlet flange of the muffler with a hacksaw and remove the muffler. **Make the cut as close to the muffler as possible.**

Installation

1. Install the retaining clamp(s) on the inlet pipe. Position a new service muffler on the inlet pipe.
2. Position the outlet pipe and clamp on the muffler.
3. Adjust the exhaust system and tighten the clamps and support clamp bracket attaching nuts to the specifications in Part 26-01.

OUTLET PIPE

Removal

1. Remove or loosen and slide the outlet pipe clamp rearward at the muffler (Figs. 5 thru 8). Remove the outlet pipe support bracket clamps (if so equipped). Separate the outlet pipe from the muffler.

If the truck is equipped with a muffler outlet pipe extension, loosen the

retaining clamp(s) and remove it from the outlet pipe.
2. Replace any damaged parts.

Installation

1. Position the muffler clamp on the outlet pipe, then slide the pipe onto the muffler. Install, but do not tighten, the support clamps (if so equipped).

If the truck is equipped with a muffler outlet pipe extension, position the retaining clamp on the outlet pipe. Slide the pipe extension onto the outlet pipe and tighten the retaining clamp.

2. Align the exhaust system and tighten the outlet pipe clamp and support bracket clamp attaching nuts (if so equipped) to the specifications in Part 26-01.
3. Check the exhaust system for leaks.

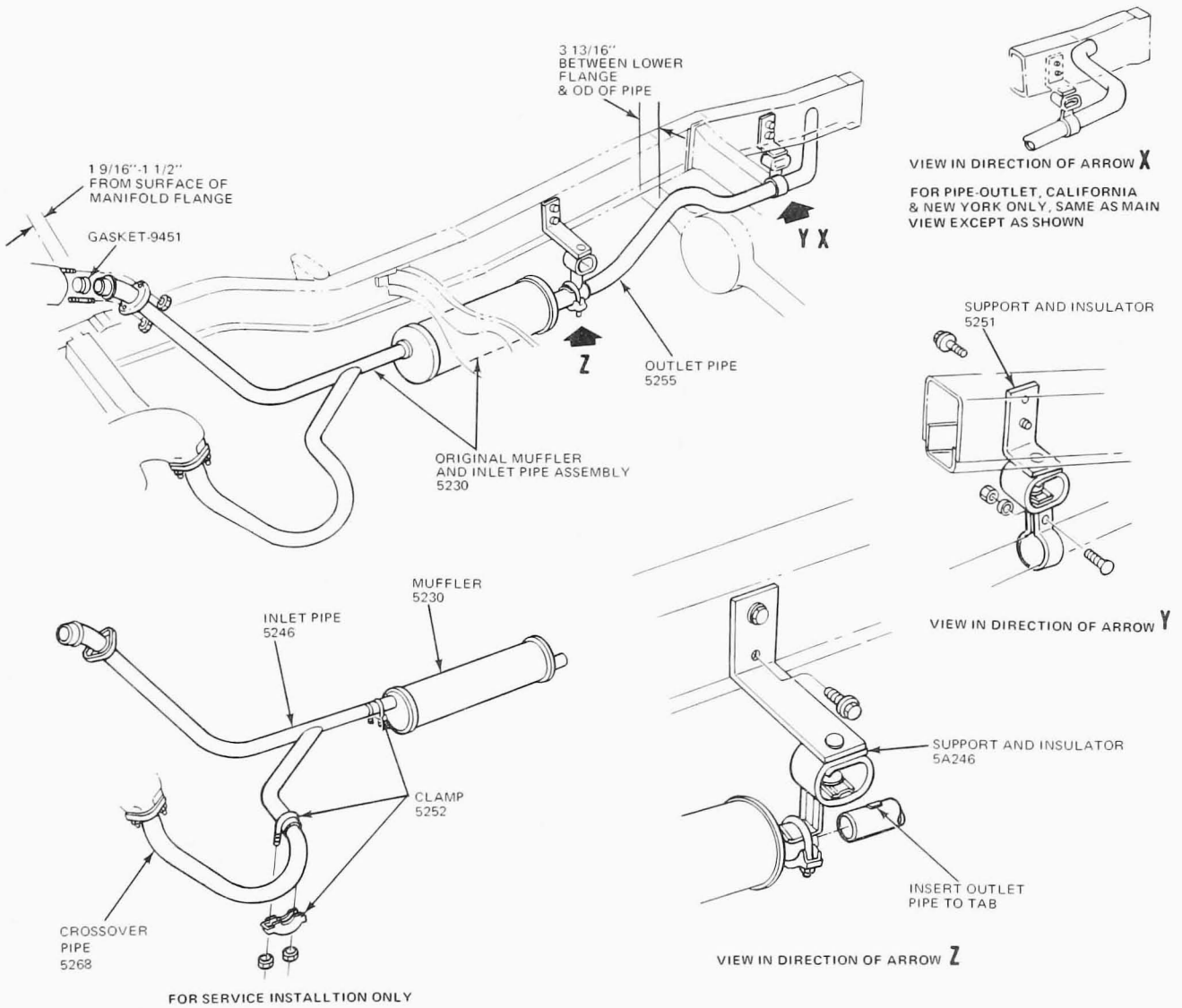

FIG. 1 Bronco V-8 Single Exhaust System

U1042-C

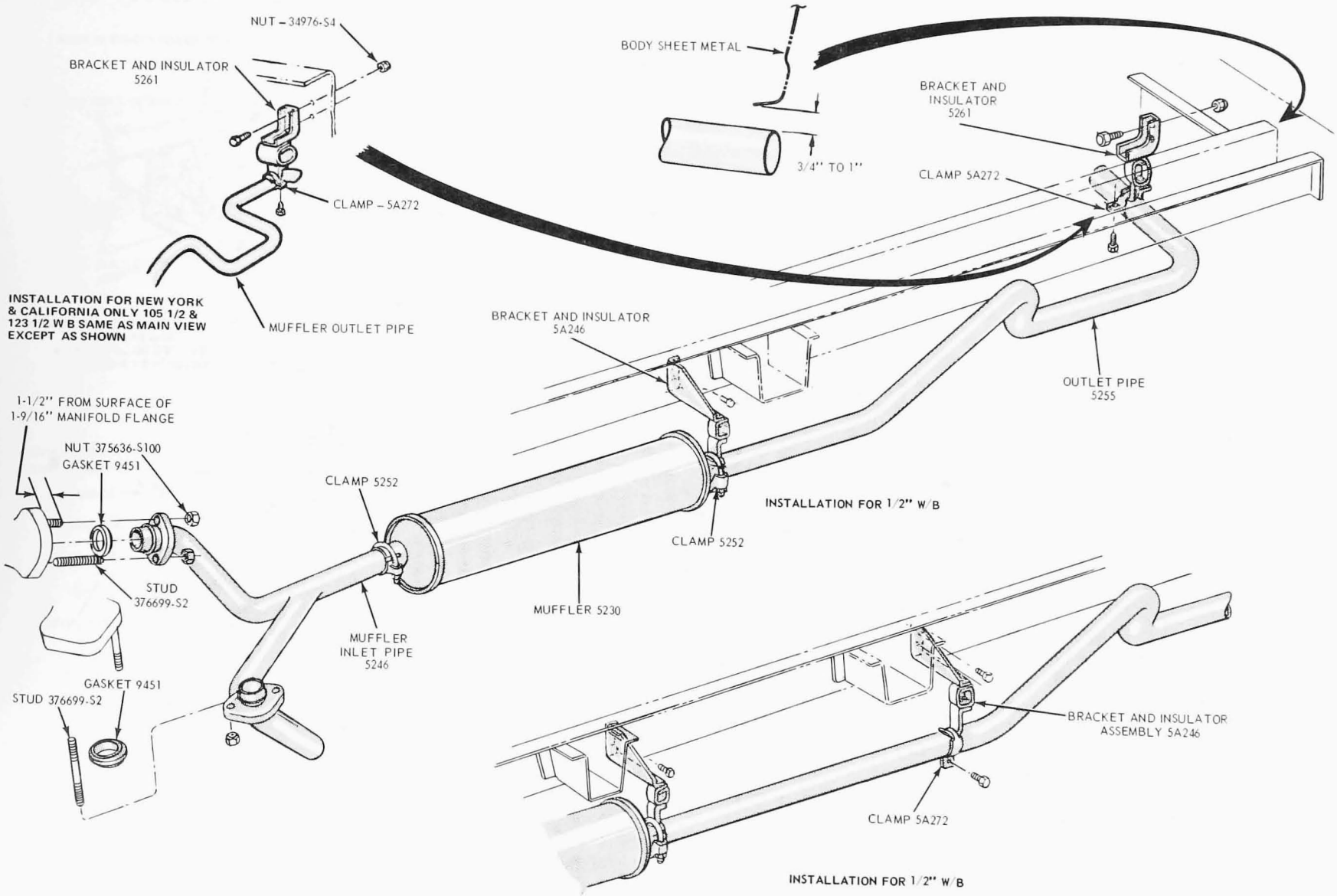

FIG. 2 Econoline V-8 Single Exhaust System

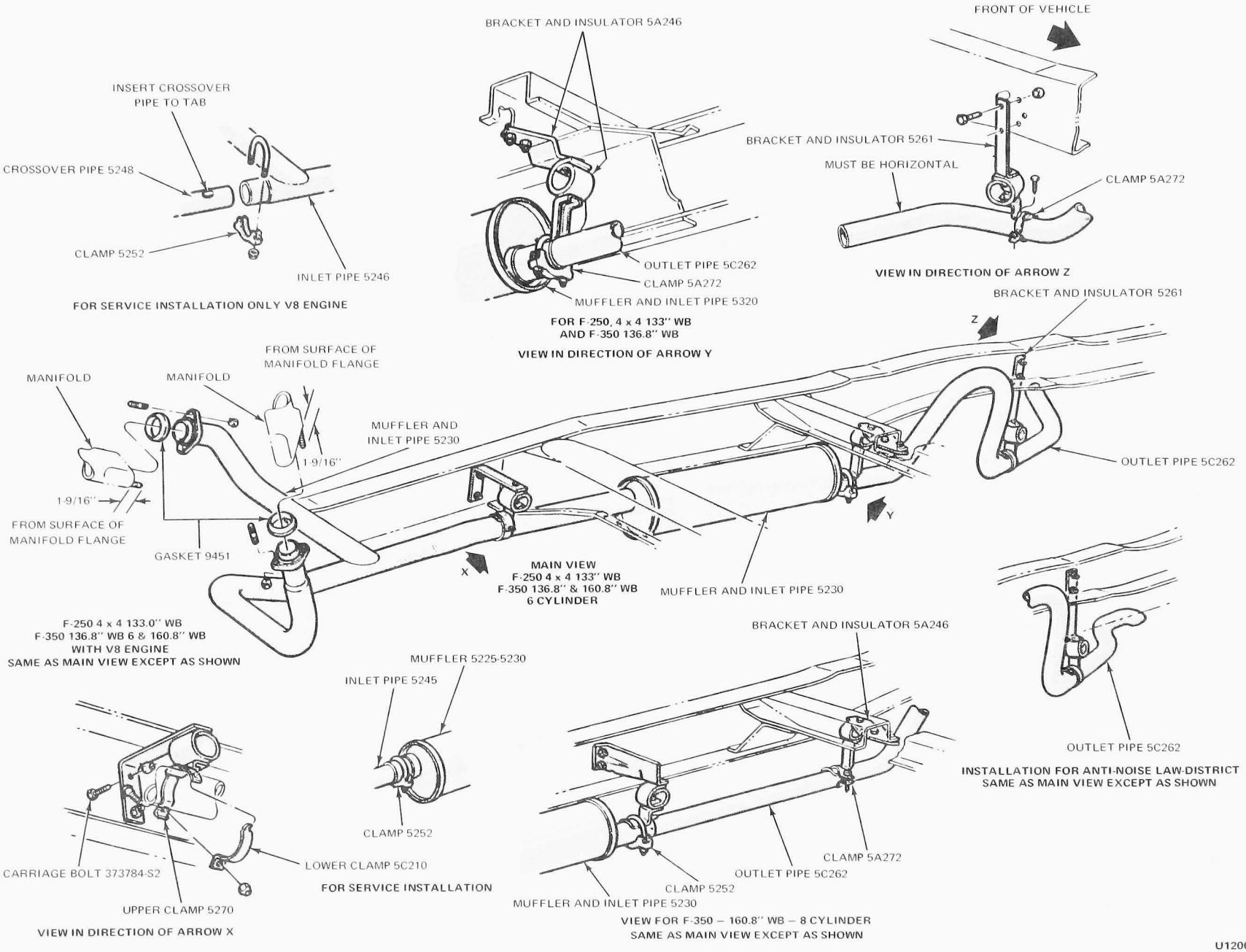

FIG. 3 F-100 and F-250 Series V-8 Single Exhaust System

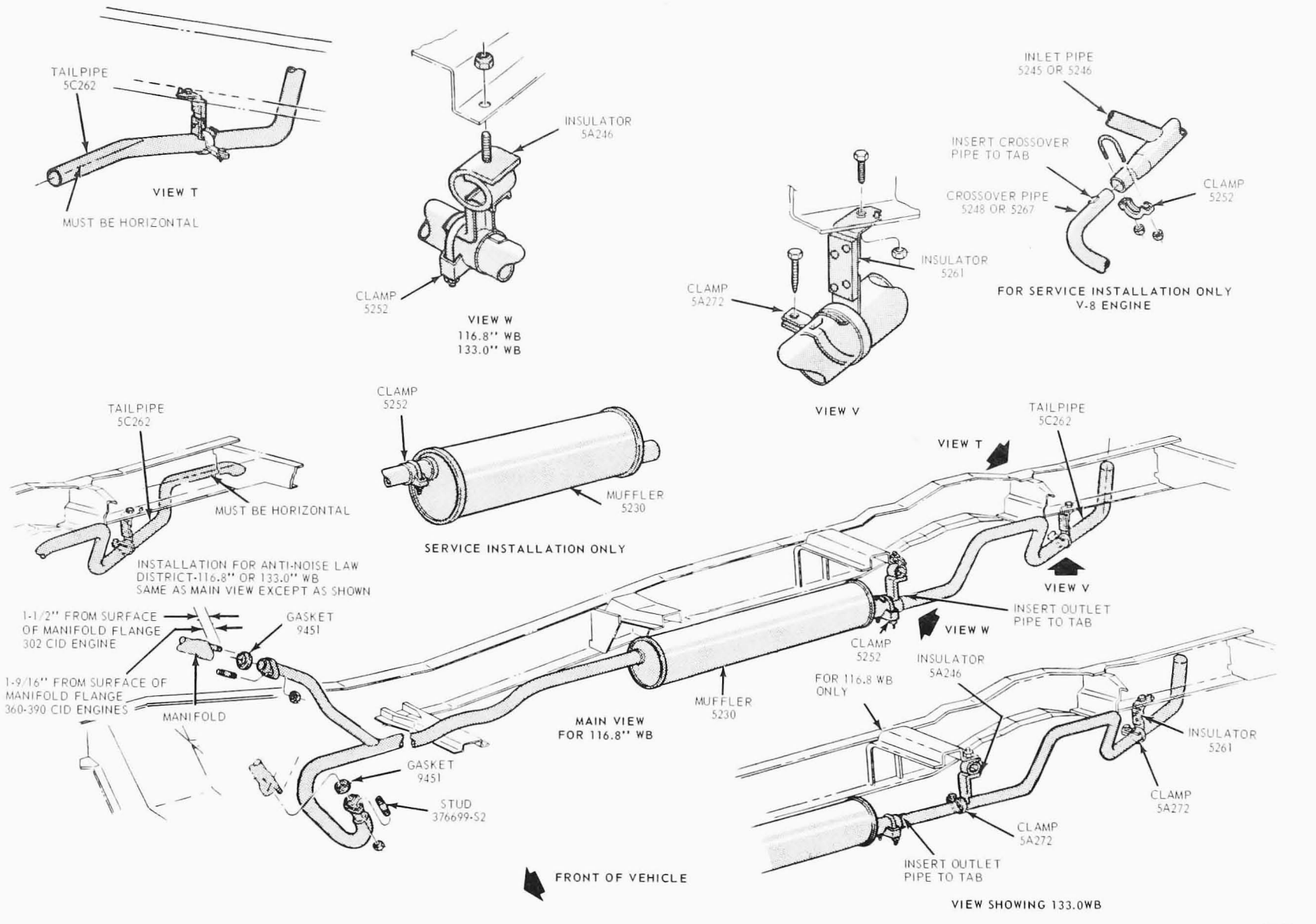

FIG. 4 F-250 (4 x 4) and F-350 V-8 Single Exhaust System

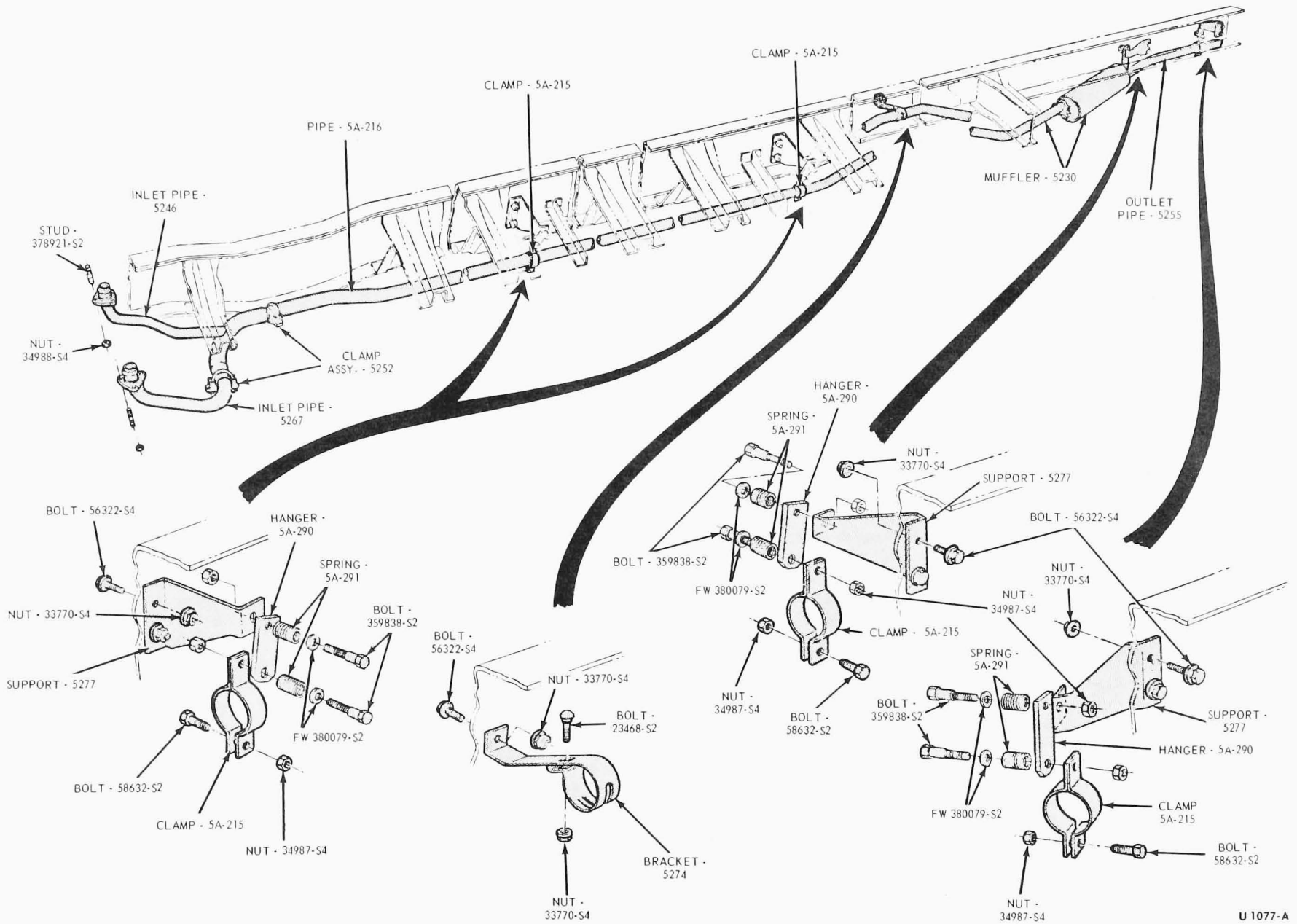

FIG. 5 B-600-750 V-8 Single Exhaust System

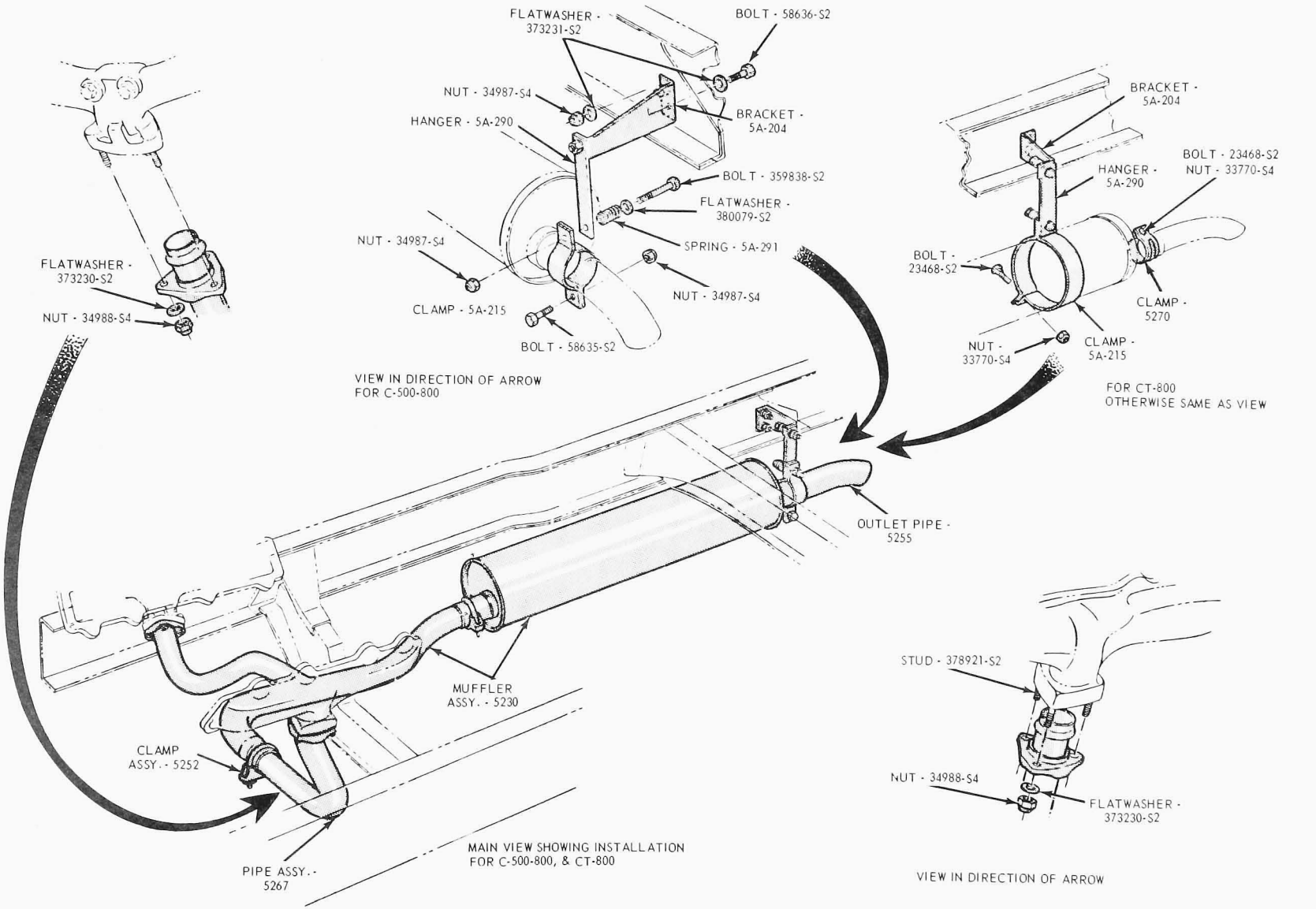

FIG. 6 C-600-800 and CT-800 V-8 Single Exhaust System

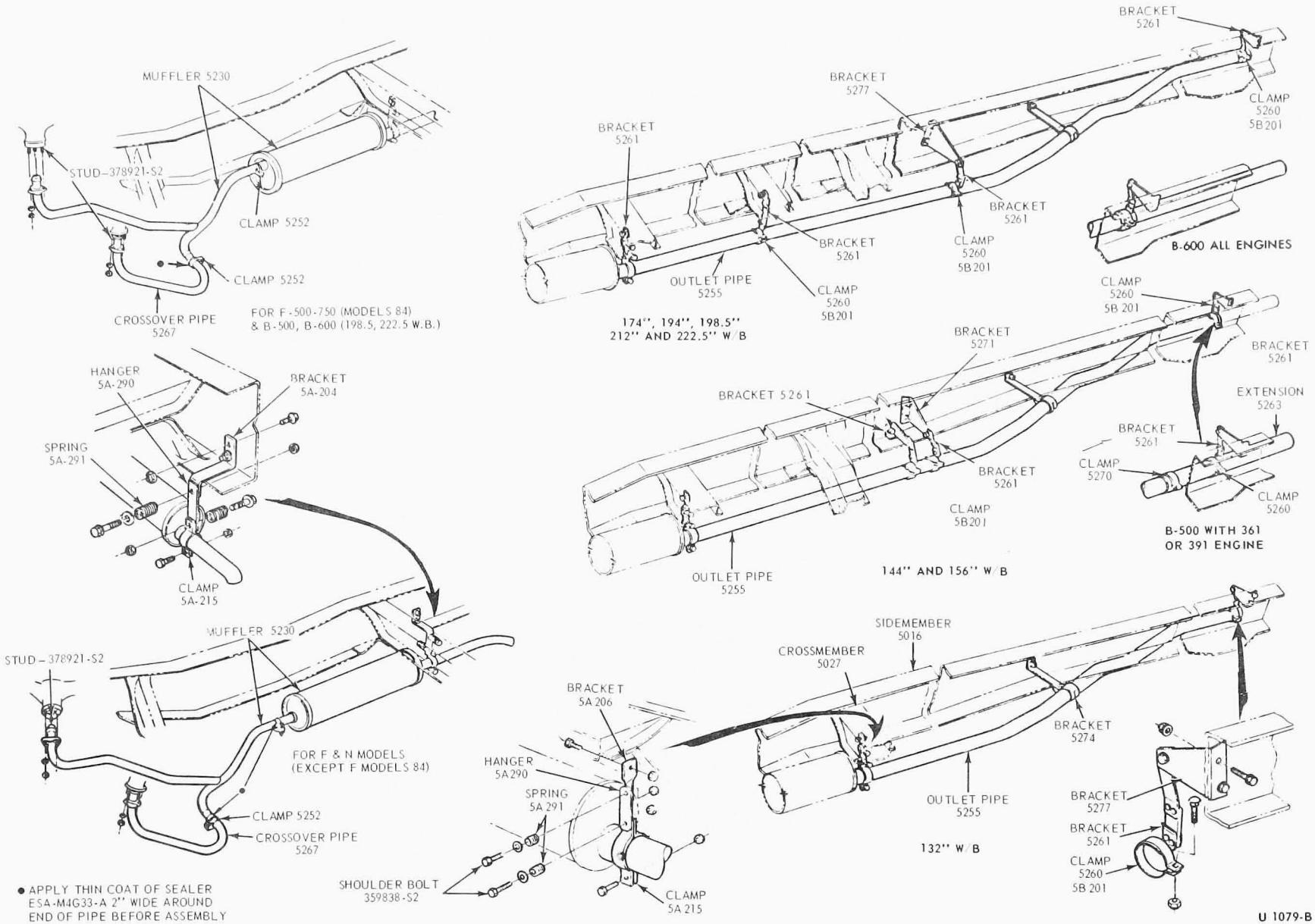

FIG. 7 B-600 (198 1/2 and 222 1/2 inch wheelbase), F-and N-500-750 and P-500 V-8 Single Exhaust System

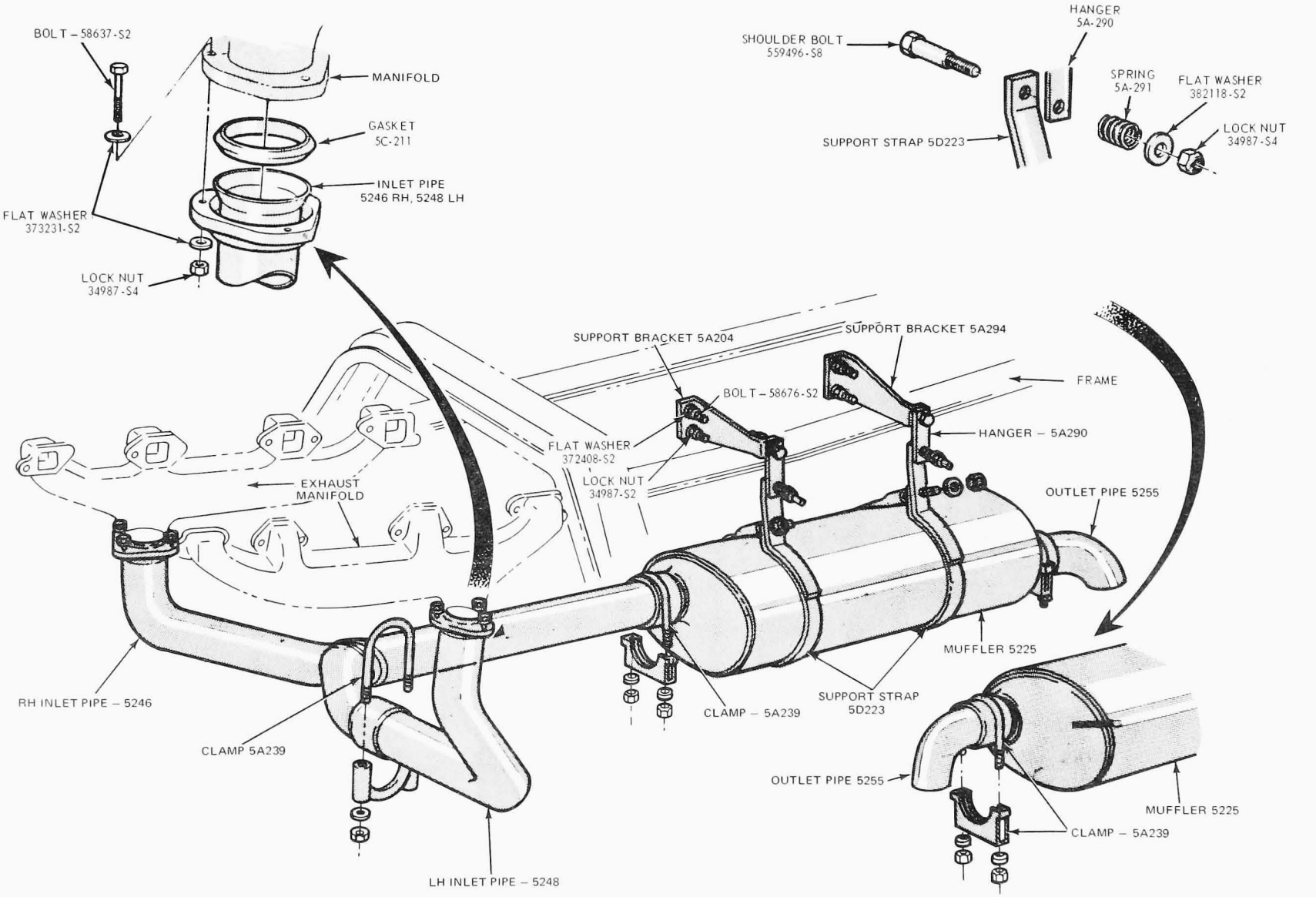

FIG. 8 L-, LT-900 and LN-, LNT-900 V-8 Single Exhaust System

PART- 26-23 V-8 Dual Exhaust System

COMPONENT INDEX	Page
INLET PIPE	
Installation	23-01
Removal	23-01
MUFFLER	
Installation	23-01
Removal	23-01
OUTLET PIPE	
Installation	23-01
Removal	23-01
SPECIFICATIONS	01-02

REMOVAL AND INSTALLATION

Brackets, clamps and insulators should be replaced if they are damaged or badly corroded. Do not attempt to repair these parts.

EXHAUST SYSTEMS—600-1000 SERIES TRUCKS

Typical V-8 dual exhaust systems are shown in Figs. 1 thru 6.

The following procedures apply to the right or left installation for the dual exhaust system, unless otherwise noted.

INLET PIPE

Removal

1. Remove the clamp securing the inlet pipe to the muffler.
2. Remove the attaching nuts securing the inlet pipe to the exhaust manifold.
3. Separate the inlet pipe from the exhaust manifold and the muffler.
4. Remove the flange gasket and clean the exhaust manifold flange(s).

Installation

1. Position the inlet pipe in the muffler. Loosely install the retaining clamp.
2. Place a new gasket on the exhaust manifold flange and position the inlet pipe to the exhaust manifold. Loosely install the attaching nuts.
3. Adjust the system. Torque all attaching nuts and bolts to specifications in Part 26-01.
4. Check the system for leaks.

MUFFLER

Removal

1. Remove the retaining clamp securing the muffler to the outlet pipe and separate the outlet pipe from the muffler (Figs. 1 thru 6).
2. Remove the clamp securing the muffler to the inlet pipe.
3. Loosen the muffler support bracket clamps.
4. Separate the muffler from the inlet pipe and remove it from the vehicle.

Installation

1. Slide the muffler through the retaining clamps and position it on the inlet pipe. Loosely install the retaining clamp.
2. Position the outlet pipe to the muffler and loosely install the retaining clamp.
3. Adjust the system and torque the attaching nuts and bolts to the specifications in Part 26-01.
4. Check the system for leaks.

OUTLET PIPE

Removal

1. Remove the clamp securing the outlet pipe to the muffler (Figs. 1 thru 6).
2. Remove the outlet pipe.

Installation

1. Position the outlet pipe to the muffler and loosely install the retaining clamp(s).
2. Adjust the position of the outlet pipe and torque the attaching nuts to the specifications in Part 26-01.
3. Check the system for leaks.

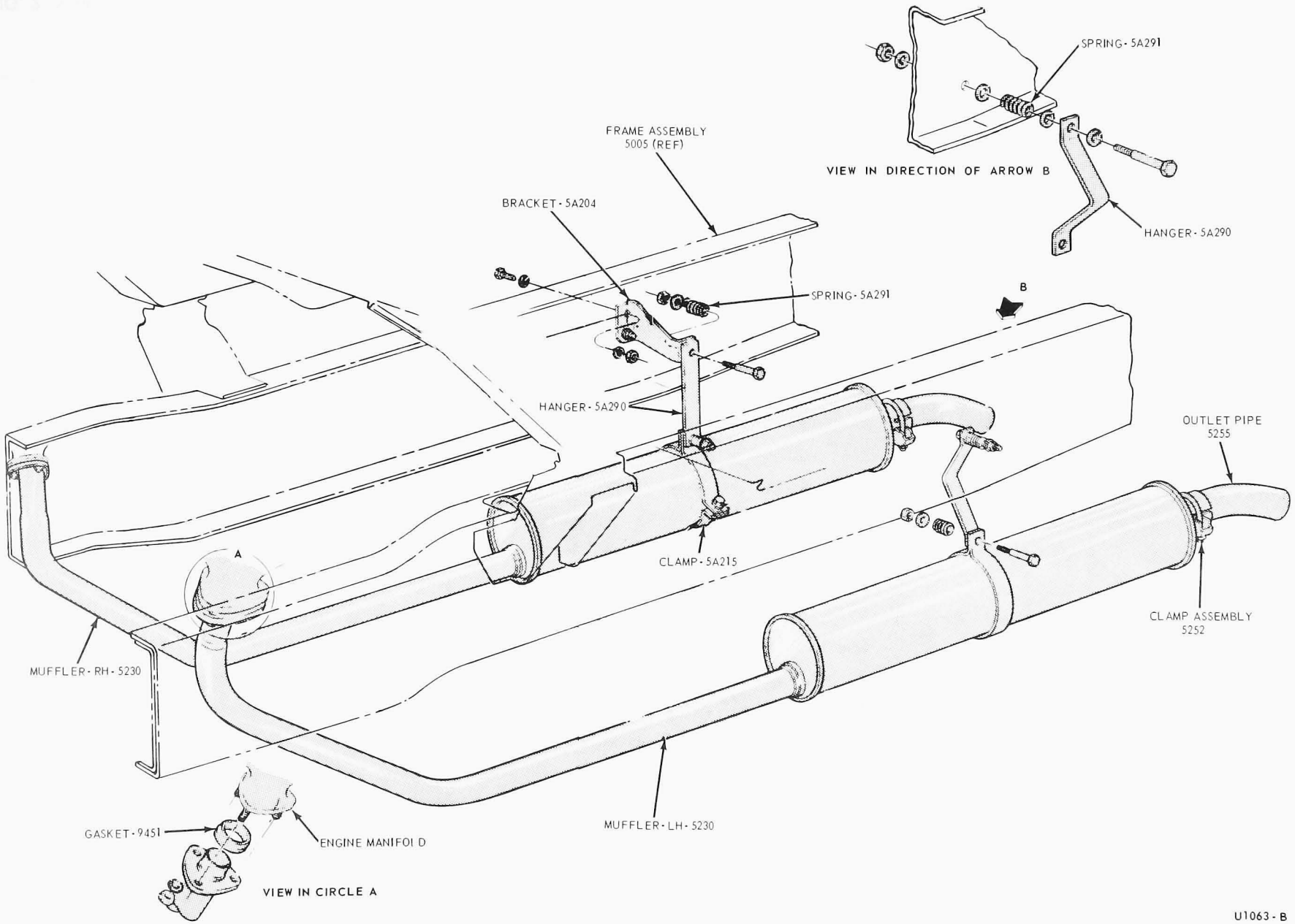

FIG. 1 L-600, 700, 750, LN-600, 700 and 750 Dual Exhaust System

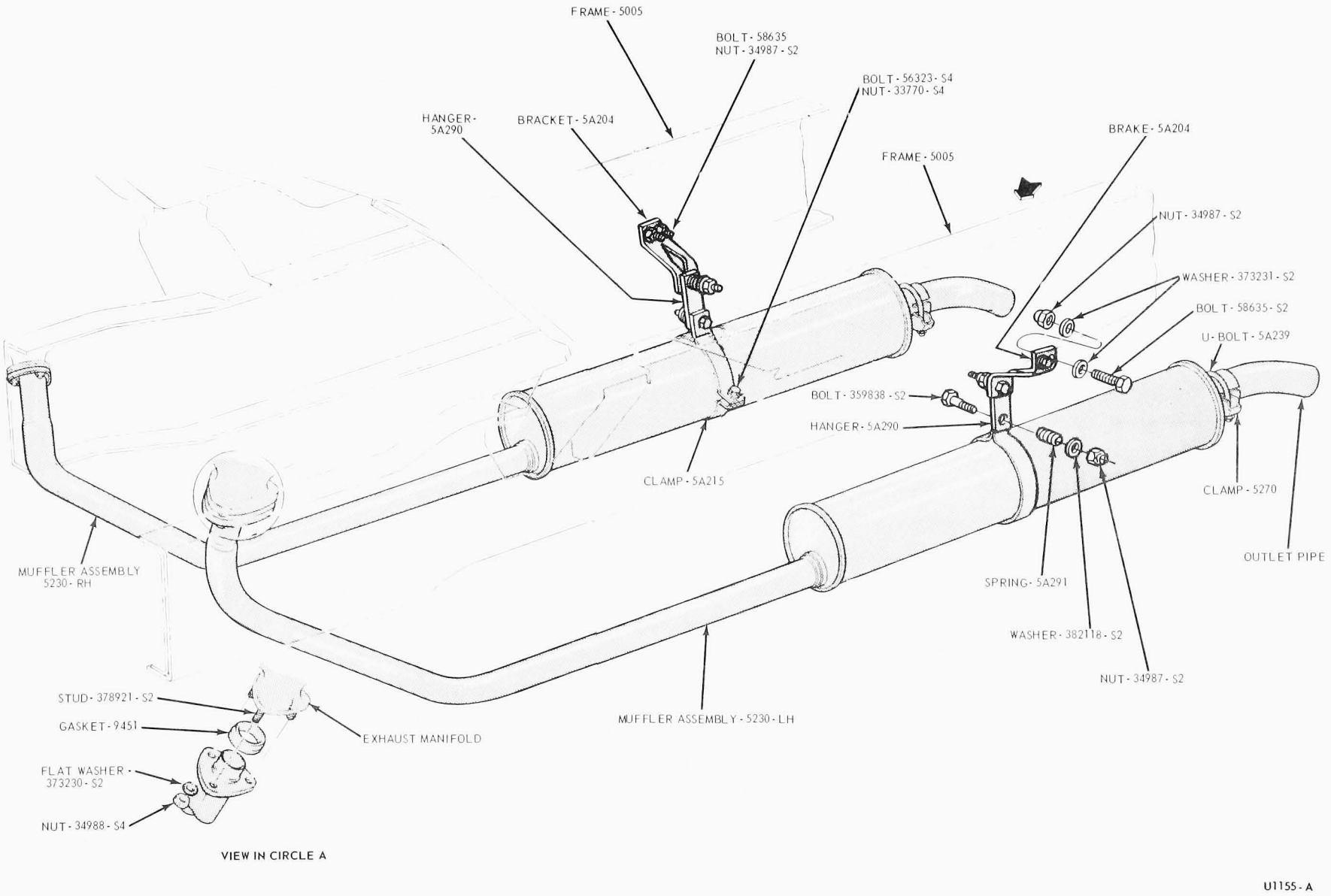

FIG. 2 C-600 Through 900 and CT-800 and 900 Dual Exhaust Systems

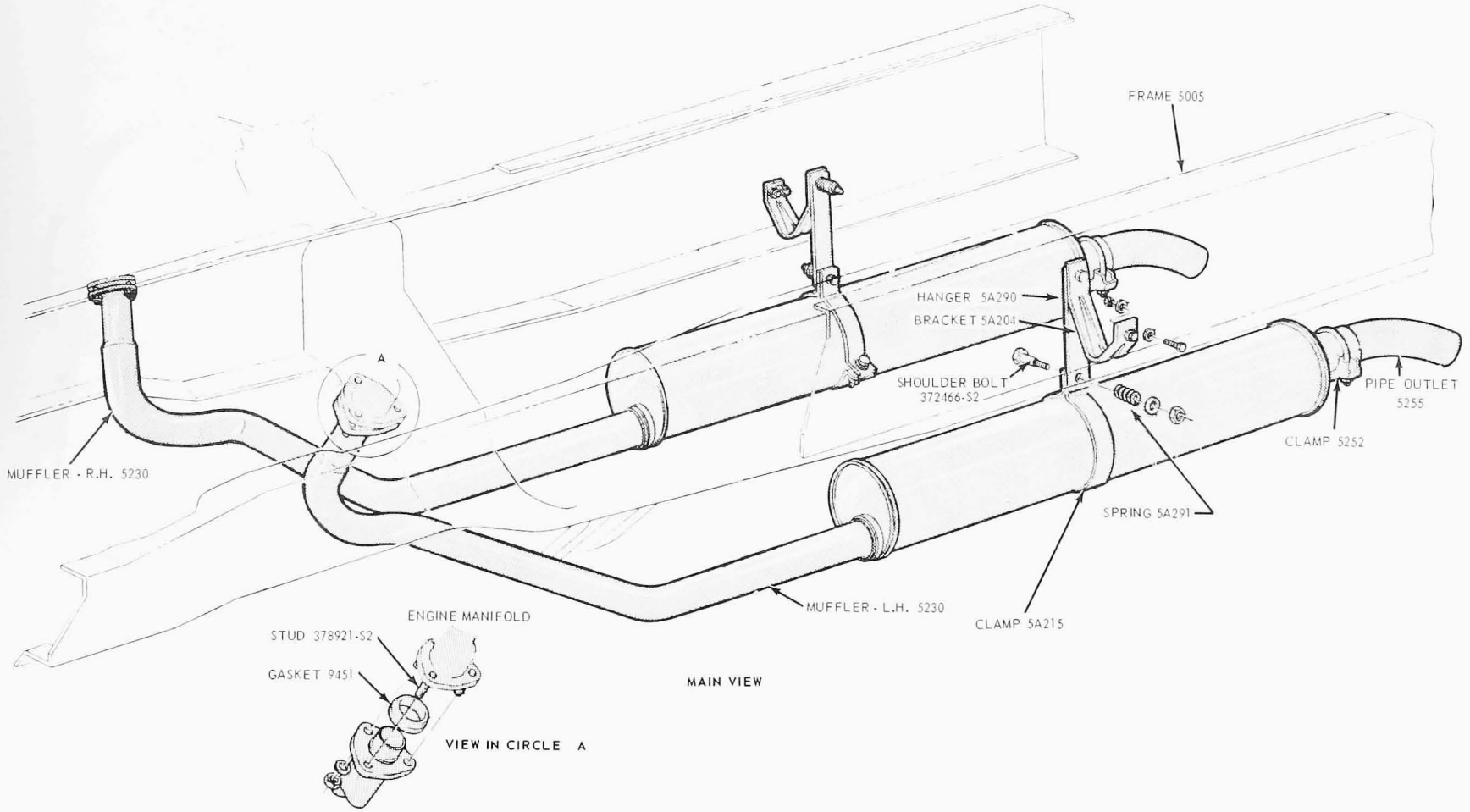

FIG. 3 F-, N-600-750 Dual Exhaust System

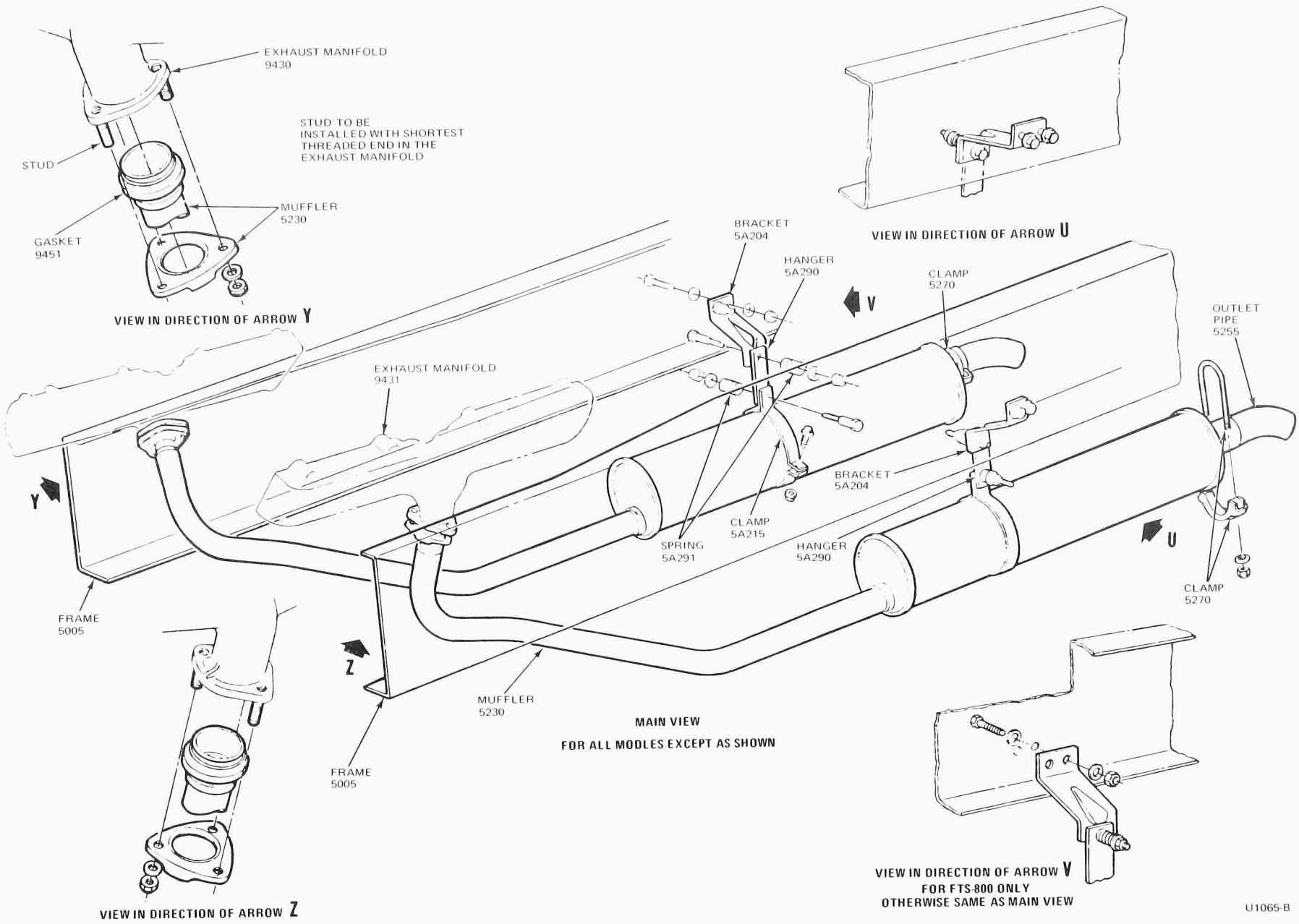

FIG. 4 L-, LN, LT-LNT and LTS-800 Dual Exhaust System

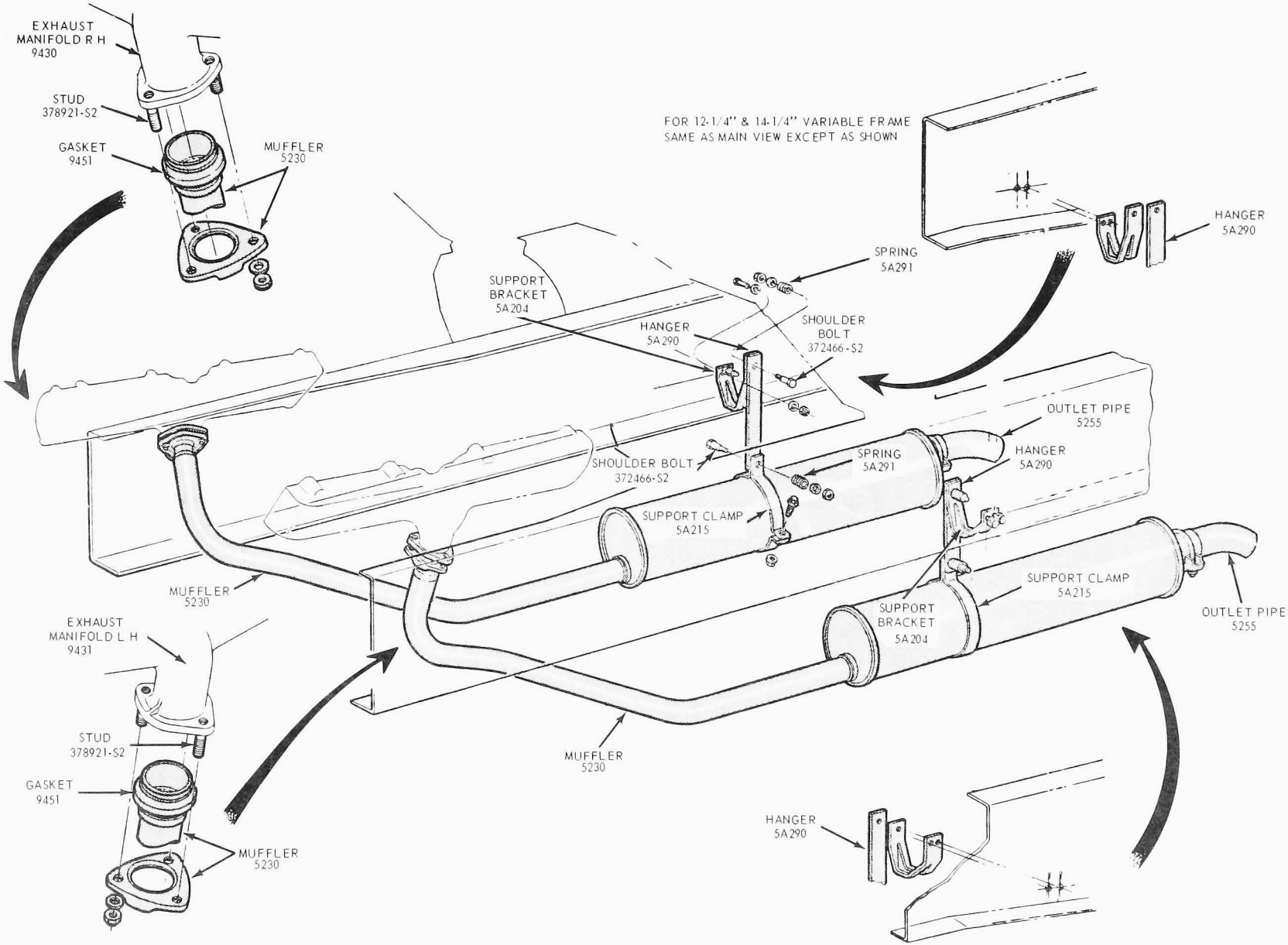

FIG. 5 L-, LT-800 and LN-, LNT-800 Dual Exhaust System

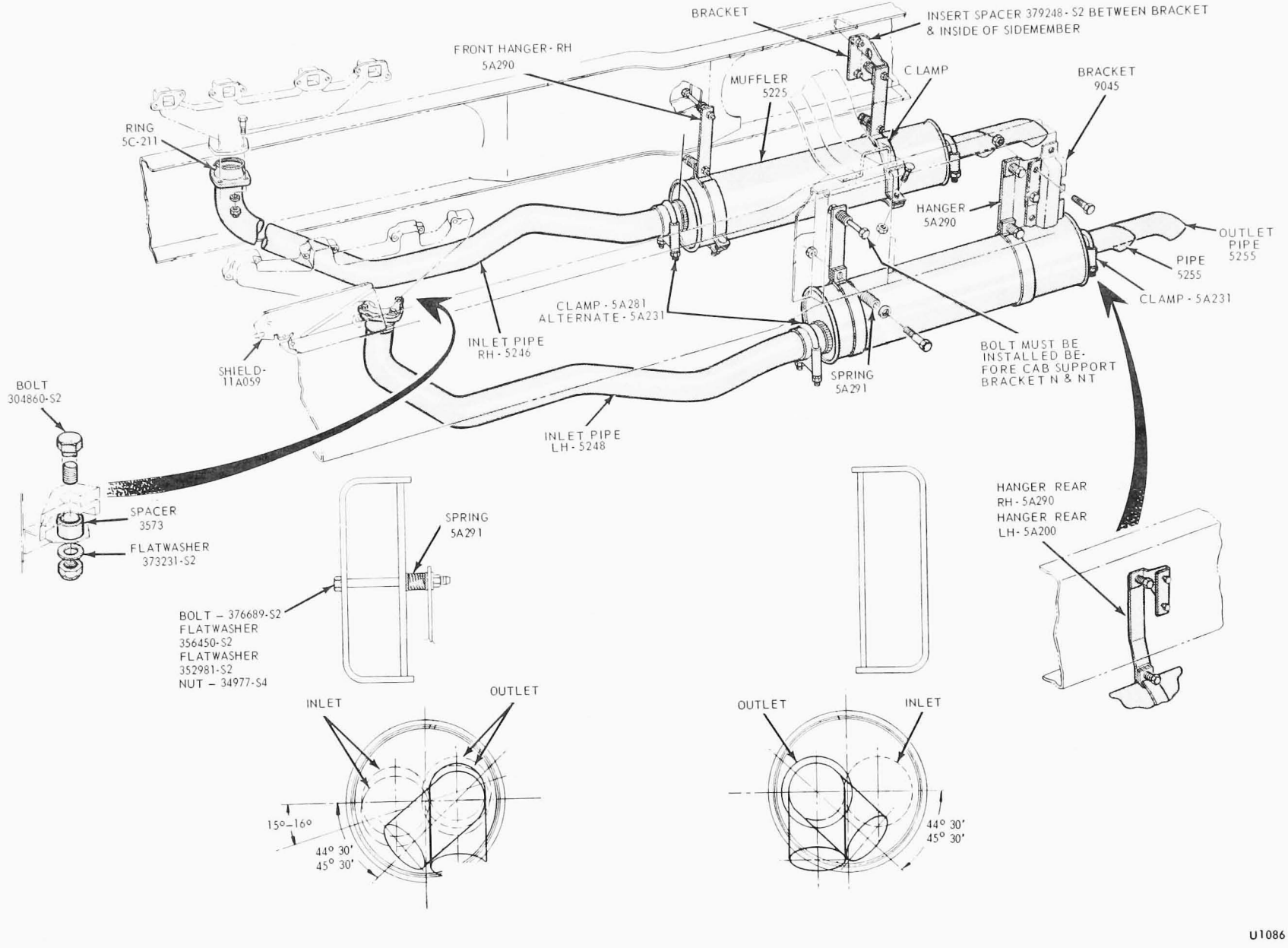

FIG. 6 L-, LN-800-900 and LT-, LNT-800-900 Dual Exhaust System

PART 26-30 FORD V-8 Diesel Exhaust Systems

Applies to All Models

COMPONENT INDEX	Page	COMPONENT INDEX	Page
INLET PIPE		MUFFLER AND OUTLET PIPE	
Installation	30-01	Installation	30-01
Removal	30-01	Removal	30-01
		SPECIFICATIONS	01-02

REMOVAL AND INSTALLATION

Brackets, clamps and insulators should be replaced if they are damaged or badly corroded. Do not attempt to repair these parts.

INLET PIPE

C-, L-AND LN-6000-8000 CAB MODELS AND LT-, LTS-, LNT-8000

The exhaust systems for the Ford V-8 diesel engines are shown in Figs. 1 thru 7.

Removal

1. Loosen the hanger straps on the muffler.
2. Remove the inlet pipe extension to muffler clamp, separate the extension from the muffler, and slide the muffler rearward.
3. Remove the exhaust manifold to inlet pipe nuts and bolts and remove the inlet pipe assembly from the vehicle.
4. Remove the right and left inlet pipe to extension clamps. Separate the pipes from the adapter.
5. Clean the exhaust manifold flanges.

Installation

1. Position the right and left inlet pipes in the extension. Loosely install the retaining clamps.
2. Position the inlet pipe assembly on the exhaust manifold flanges and into the muffler. Loosely install the pipe to manifolds nuts and bolts and muffler clamp.
3. Align the exhaust system and tighten all attaching nuts to the specifications in Part 26-01.
4. Check the system for leaks.

L-AND B-6000-7000 COWL MODELS

Removal

1. Remove the bolts and nuts securing the inlet pipes to the exhaust manifolds.
2. Remove the clamp securing the inlet pipe extension to the muffler and separate the extension from the muffler.
3. Loosen the muffler hanger straps and outlet pipe clamps as necessary to provide lowering clearance to disengage the inlet pipes from the exhaust manifolds.
4. Remove the clamps and separate the right and left inlet pipes from the extension.
5. Clean the exhaust manifold flanges.

Installation

1. Position the left and right inlet pipes in the inlet pipe extension and loosely install the retaining clamps.
2. Position the extension in the muffler and the inlet pipes in the exhaust manifolds. Loosely install the attaching nuts, bolts and clamps,
3. Adjust the exhaust system and torque all the nuts to the specifications in Part 26-01.
4. Check the exhaust system for leaks.

MUFFLER AND OUTLET PIPE

C-, L-AND LN 6000-8000 CAB MODELS AND LT-, LTS-, LNT-8000

Removal

1. Loosen the muffler hanger strap retaining nuts (Figs. 1 and 2).
2. Remove the muffler to inlet pipe extension clamp and separate the muffler from the extension.
3. Remove the hanger strap attaching nuts and remove the muffler.
4. Remove the outlet pipe to muffler clamp and separate the pipe.

Installation

1. Position the outlet pipe in the muffler and loosely install the clamp.
2. Position the muffler on the inlet pipe extension, place the muffler hanger straps in position and loosely install the attaching nuts.
3. Loosely install the muffler to inlet pipe adapter clamp.
4. Adjust the exhaust system and tighten all nuts to the specifications in Part 26-01.
5. Check the system for leaks.

L AND B-6000-7000 COWL MODELS

Removal

1. Perform steps 1 through 3 for inlet pipe removal.
2. Remove the clamp securing the outlet pipe to the muffler and separate the pipe from the muffler (Figs. 5 and 6).
3. Remove the muffler hanger strap nuts and lower the muffler.
4. Remove the outlet pipe extension support bracket clamp(s) and separate the outlet pipe extension from the rear outlet pipe (Figs. 5 and 6).
5. Remove the rear outlet pipe support bracket clamps. On L-6000-7000 174 inch wheelbase models, remove the outlet pipe to rear outlet pipe clamp. Separate the rear outlet pipe from the outlet pipe.
6. Remove the outlet pipe support bracket clamp(s).
7. Remove the heat shield from outlet pipe.

Installation

1. Position the muffler on the outlet pipe and install the muffler hanger straps.
2. Loosely install the muffler to the outlet pipe clamp.
3. Position the inlet pipe assembly in the muffler and to the exhaust manifold. Loosely install the attaching nuts, bolts and clamp.
4. Progressively place the outlet pipe, rear outlet pipe and outlet pipe extension in position, loosely installing the retaining clamps as the parts are installed.
5. Align the pipes and torque the clamp nuts to the specifications in Part 26-01.

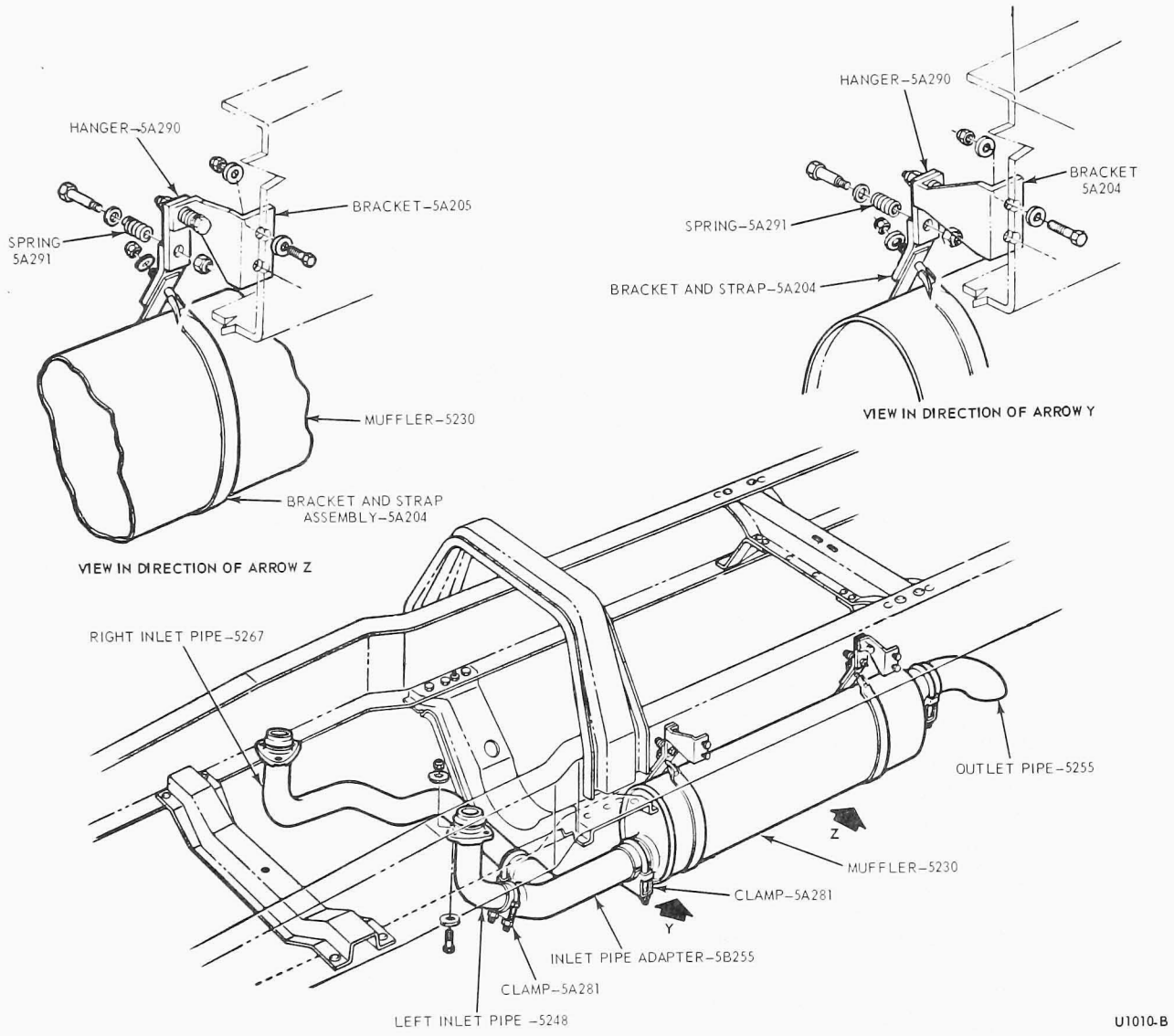

FIG. 1 Exhaust System—C-6000-8000 Ford V-8 Diesel

6. Install the heat shield on the outlet pipe under the air tank. Position the shield as shown in Fig. 5.
7. Check the system for leaks.

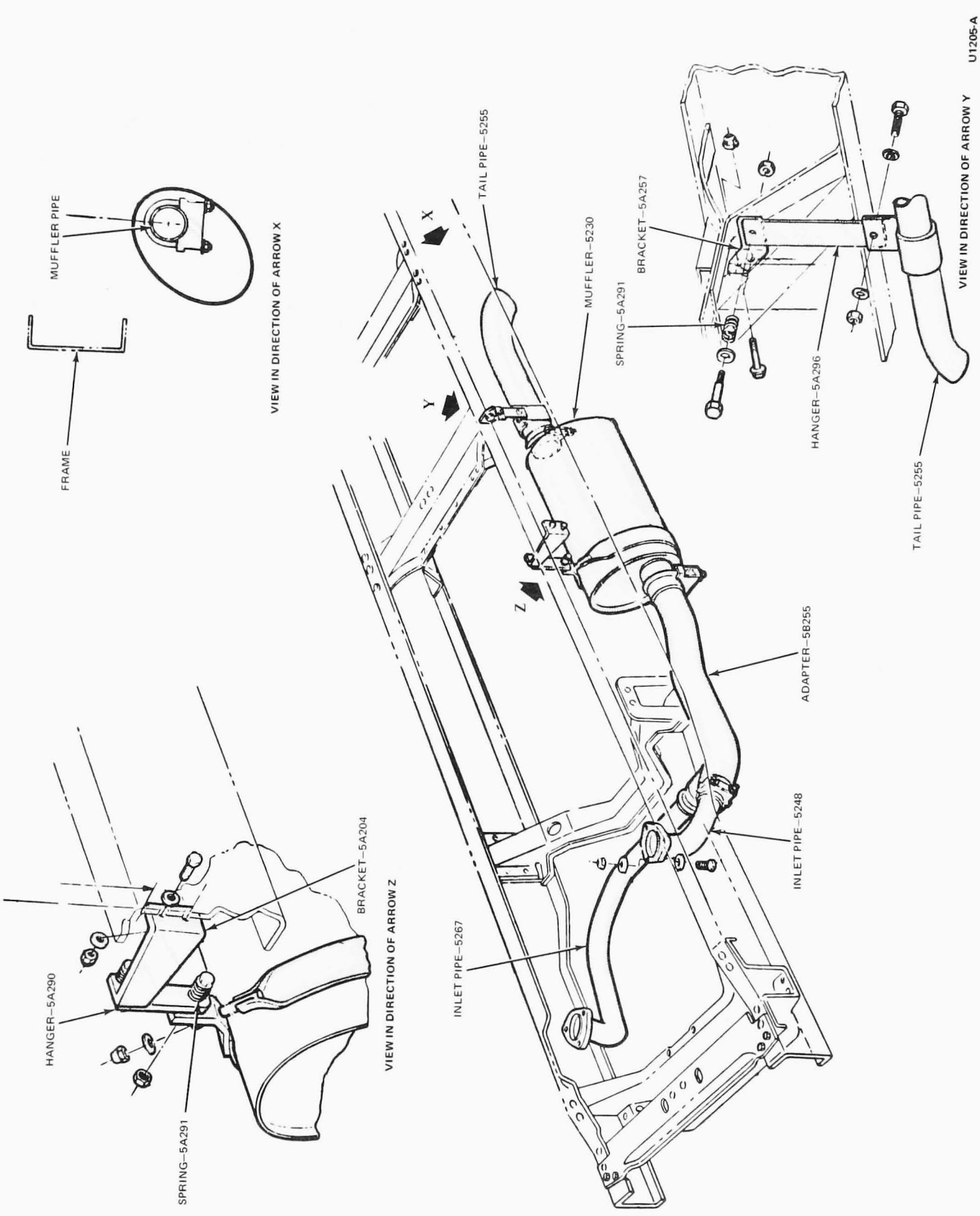

FIG. 2 Exhaust System—L-6000-7000 Ford V-8 Diesel

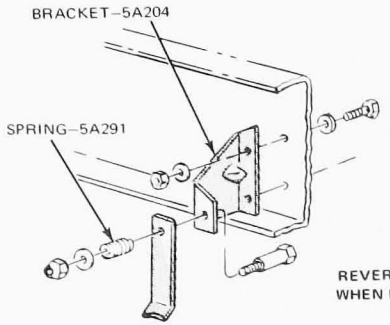

REVERSE SHOULDER BOLT AND SPRING WHEN FULLER 910 OR 9513 TRANSMISSION IS USED

VIEW IN DIRECTION OF ARROW Y

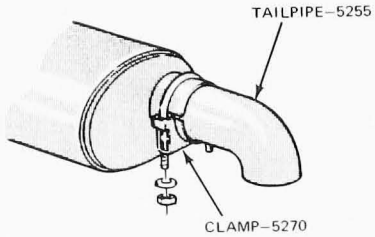

VIEW IN DIRECTION OF ARROW V

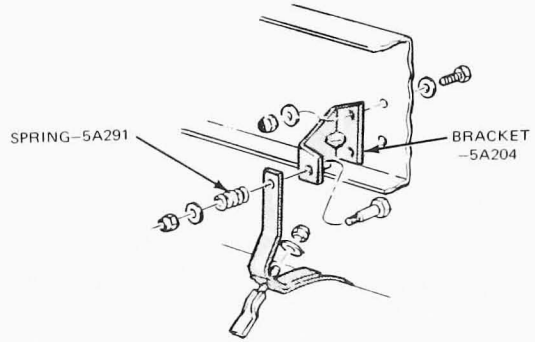

VIEW IN DIRECTION OF ARROW X SHOWING INSTALLATION OF STRAP TO MUFFLER AND MUFFLER TO FRAME EXCEPT REAR POSITION FOR LTS-8000 W/CAT M.R.

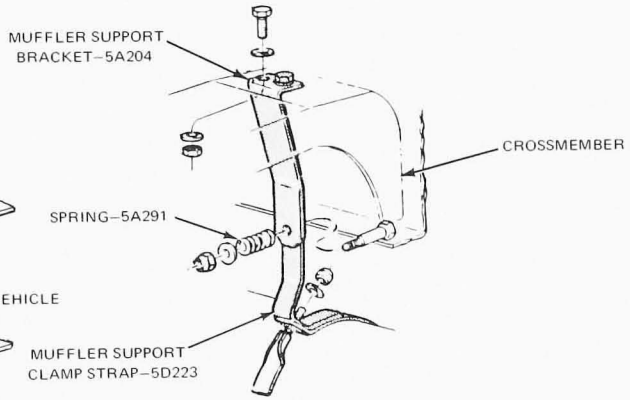

VIEW IN DIRECTION OF ARROW W SHOWING INSTALLATION OF STRAP TO MUFFLER AND MUFFLER TO # 3 CROSSMEMBER REAR POSITION

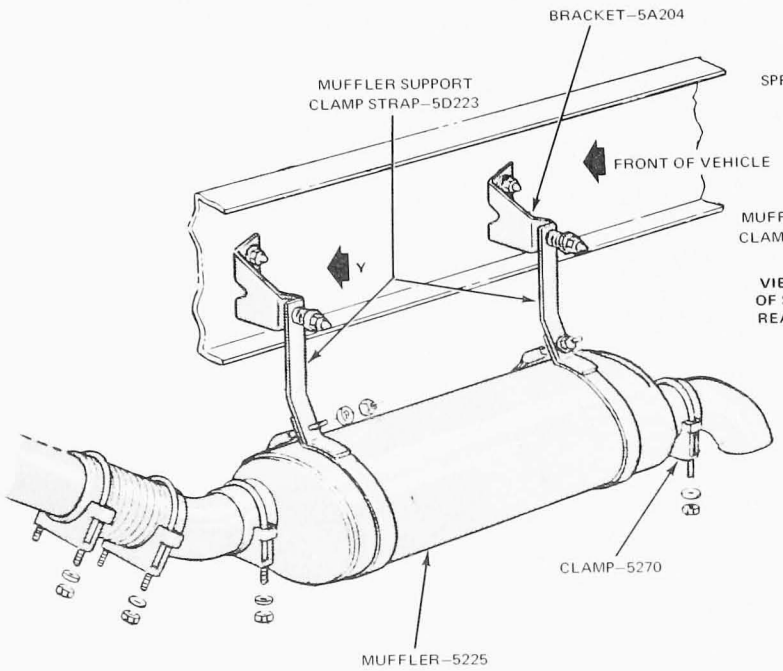

VIEW FOR CAT. M.R. W/O AUX. TRANSMISSION

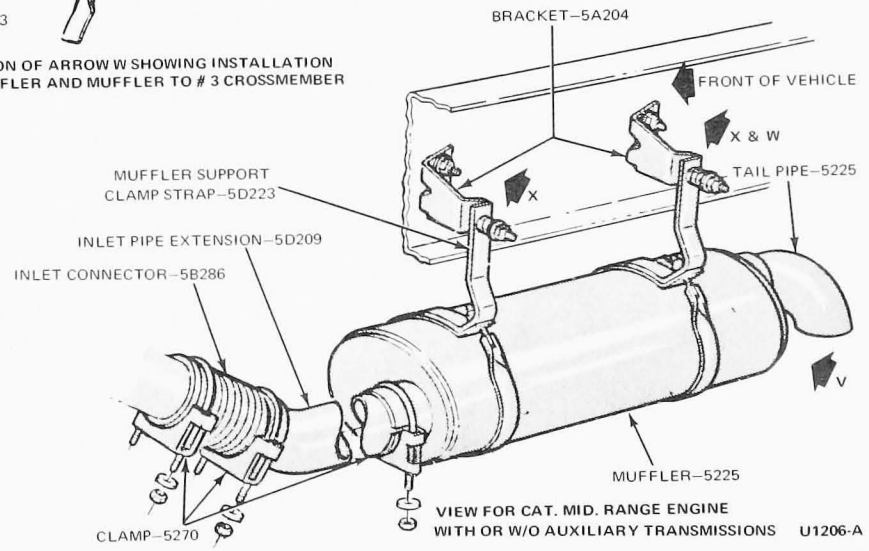

VIEW FOR CAT. MID. RANGE ENGINE WITH OR W/O AUXILIARY TRANSMISSIONS U1206-A

FIG. 3 L-, LTS-8000 and LN-, LNT-8000 Series—Ford V-8 Diesel

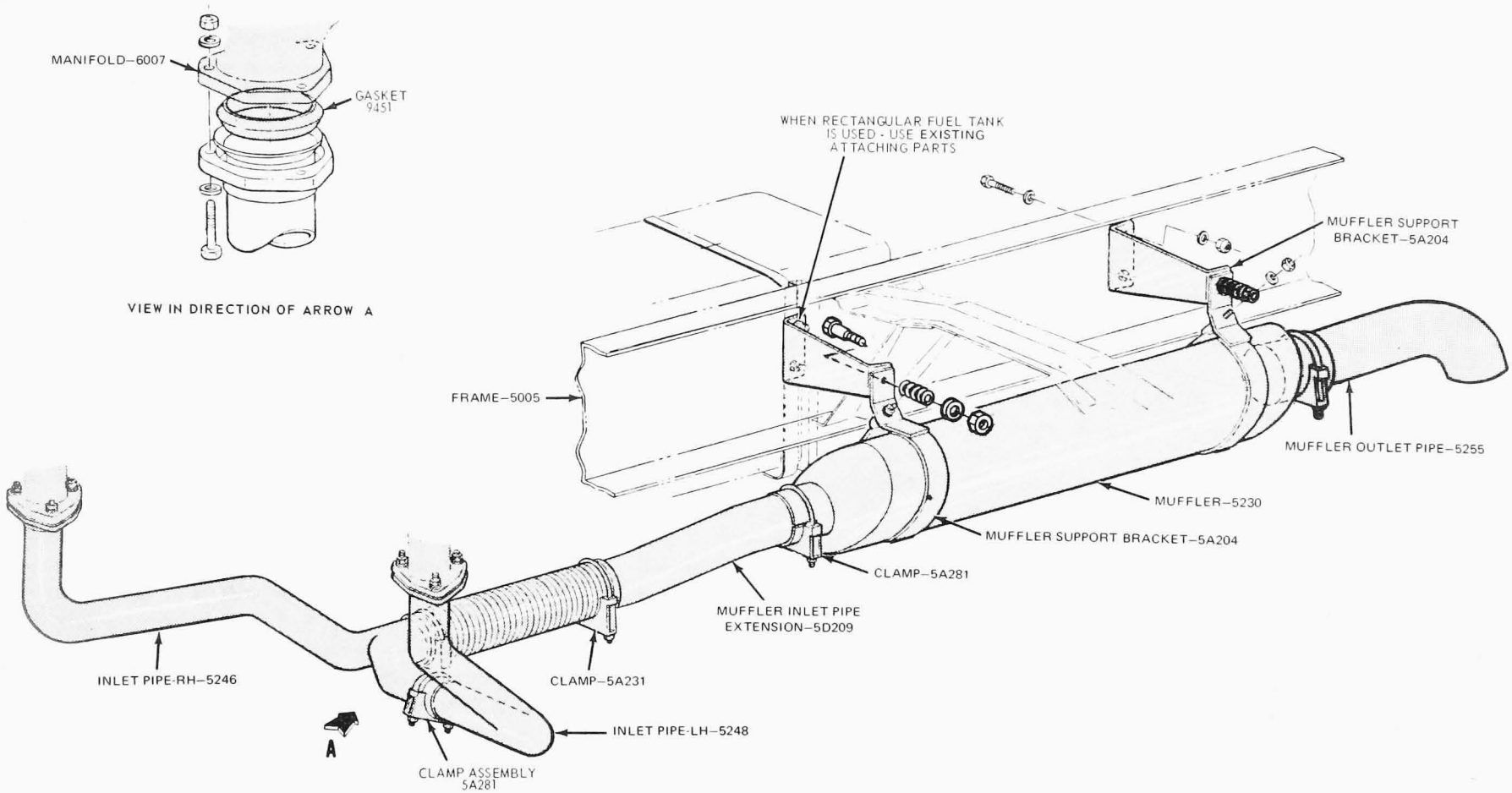

FIG. 4 LN-6000, 7000 Series Ford V-8 Diesel

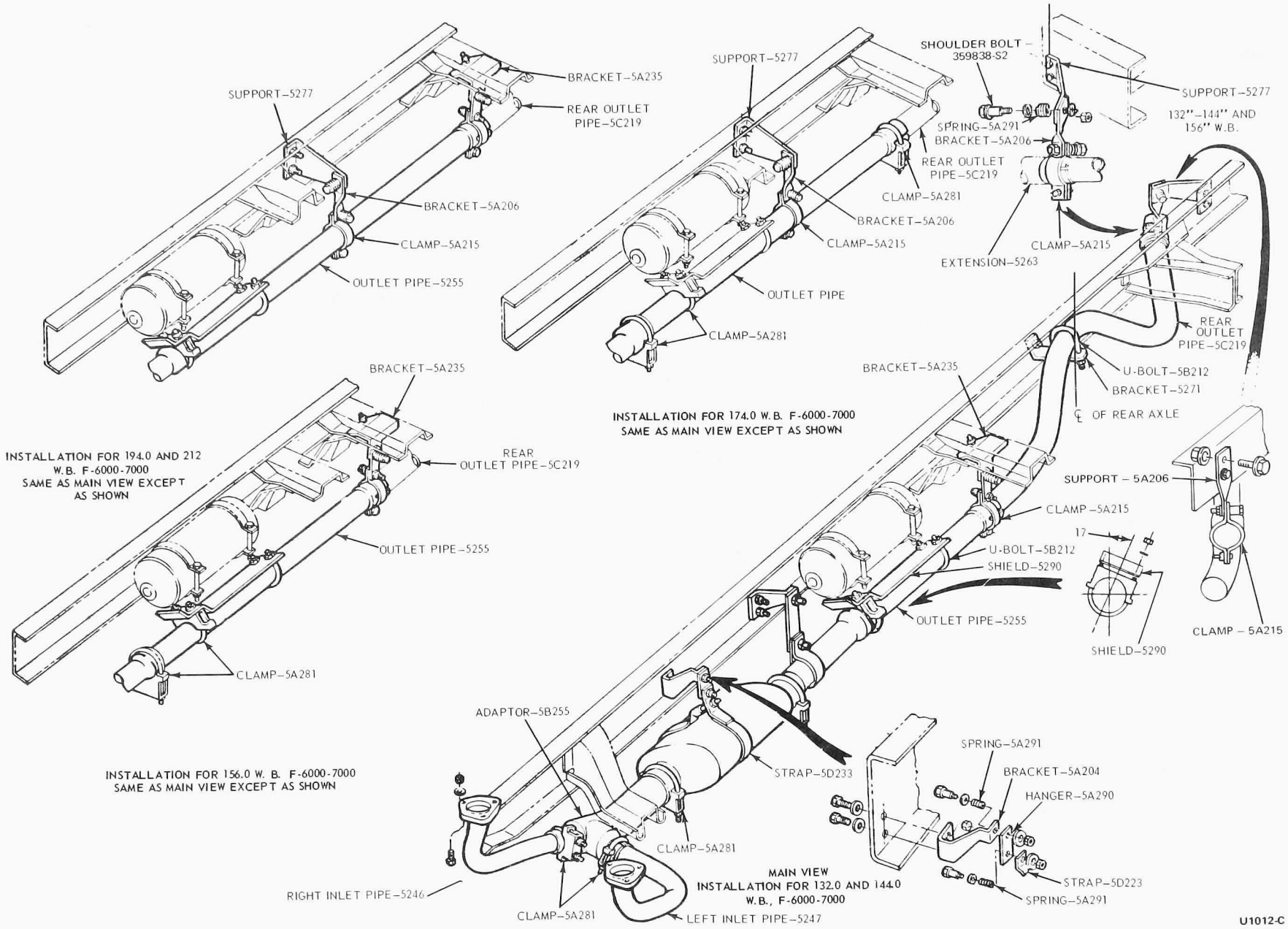

FIG. 5 LN-6000, 7000 Series Outlet Pipes Ford V-8 Diesel

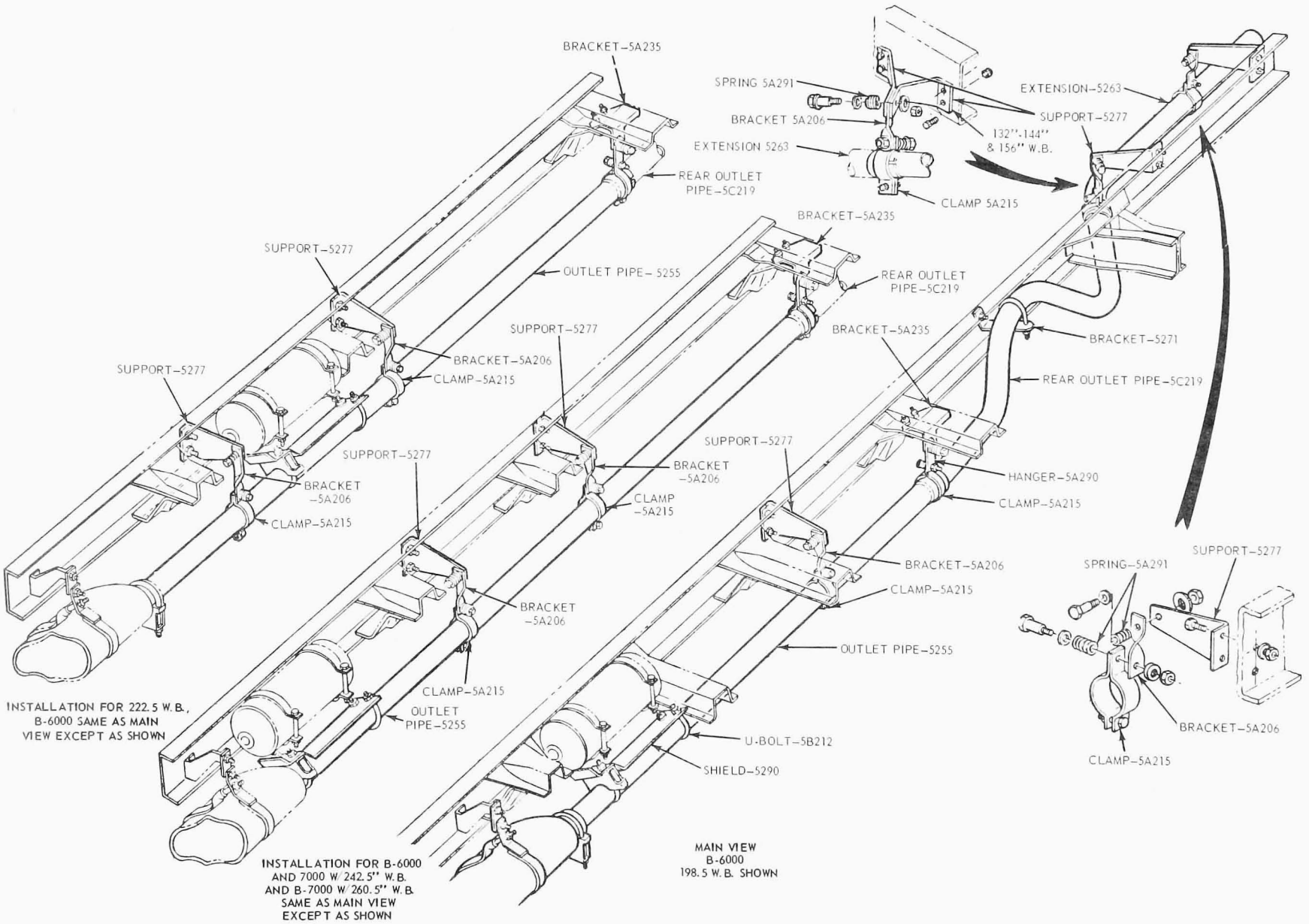

FIG. 6 B-6000, 7000 Series Outlet Pipes Ford V-8 Diesel

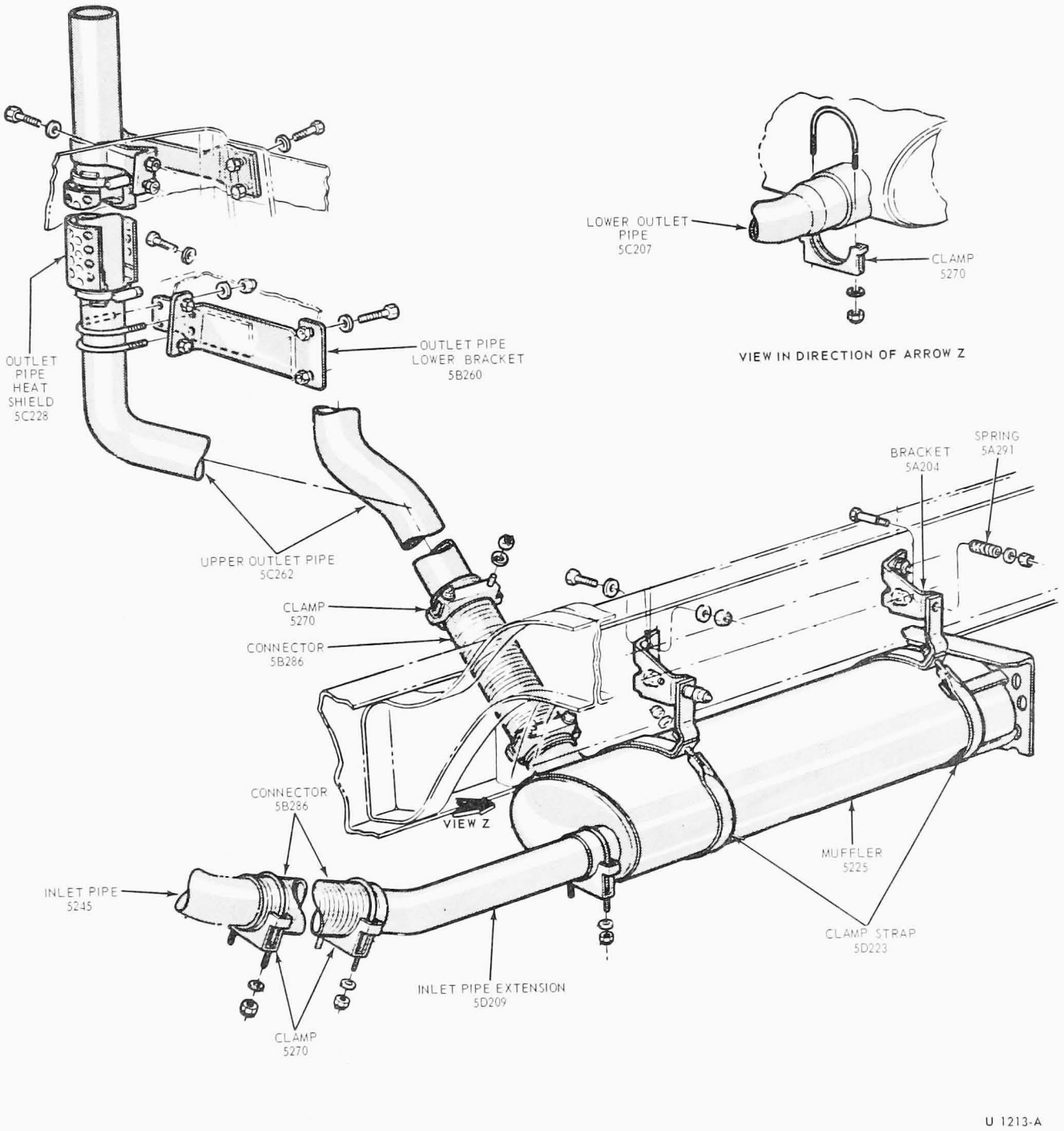

FIG. 7 Ford V-8 Exhaust System Vertical Outlet Pipes

PART 26-31 Cummins Diesel Exhaust Systems

COMPONENT INDEX Applies to Models as Indicated	L-8000	LT-8000	LN-9000	LNT-8000	LNT-9000	W-Series	WT-Series
INLET PIPE							
Removal and Installation	31-01	31-01	31-01	31-01	31-01	31-01	31-01
MUFFLER							
Removal and Installation	31-02	31-02	31-02	31-02	31-02	31-02	31-02
OUTLET PIPE							
Removal and Installation	31-02	31-02	31-02	31-02	31-02	31-02	31-02
SPECIFICATIONS	01-02	01-02	01-02	01-02	01-02	01-02	01-02

REMOVAL AND INSTALLATION

Brackets, clamps and insulators should be replaced if they are damaged or badly corroded. Do not attempt to repair these parts.

EXHAUST SYSTEM L, LT AND LNT-8000-9000 AND LN-9000 TRUCKS

MUFFLER INLET FRONT PIPE

Removal

1. Loosen the retaining clamps securing the front and rear inlet pipes to the flex connector (Figs. 1 thru 5).
2. Remove the front inlet pipe to manifold attaching nuts. Slide the flex connector rearward and disconnect it from the front inlet pipe. Remove the inlet pipe and gasket from the exhaust manifold.
3. Clean the gasket mounting surface on the exhaust manifold and inlet pipe.

Installation

1. Position a new gasket and the inlet pipe on the exhaust manifold. Install and tighten the inlet pipe attaching nuts.
2. Place the front retaining clamp on the flex connector and slide the connector forward onto the front inlet pipe. Properly position the connector and front clamp; then, tighten the front and rear clamps to the specifications in Part 26-01.
3. Check the exhaust system for leaks.

MUFFLER INLET REAR PIPE AND FLEX CONNECTOR

Removal

1. Loosen the flex connector retaining clamps and slide the flex connector rearward (Figs. 2 thru 5).
2. Loosen the rear inlet pipe clamp at the muffler and remove the inlet pipe and flex connector. Separate the connector and inlet pipe.

Installation

1. Connect the rear inlet pipe to the flex connector, and position the rear inlet pipe to muffler clamp on the inlet pipe. Insert the flex connector through the inlet pipe support bracket clamp. Place the connector to front inlet pipe clamp on the connector.
2. Connect the rear inlet pipe and flex connector assembly to the muffler and inlet front pipe. Properly position the inlet rear pipe, flex connector and the retaining clamps. Tighten the retaining clamps to specifications (Part 26-01).
3. Check the exhaust system for leaks.

EXHAUST SYSTEM—W-AND WT-SERIES TRUCKS

Typical exhaust systems used on the W-Series truck are shown in Fig. 6.

INLET PIPE—CUMMINS NH ENGINES

Removal

1. Loosen the inlet pipe to inlet pipe extension clamp (Fig. 6).
2. Remove the exhaust manifold to inlet pipe bolts and nuts.
3. Remove the inlet pipe bracket clamp.
4. Remove the inlet pipe and clean the gasket surfaces.

Installation

1. Using a new gasket place the new inlet pipe in position and install the exhaust manifold to inlet pipe bolts and nuts.
2. Install the inlet pipe bracket clamp.
3. Tighten the inlet pipe to inlet pipe extension clamp to specifications.

INLET PIPE—CUMMINS NTC ENGINE

Removal

1. Remove the inlet pipe to engine and inlet pipe to inlet pipe extension clamps.
2. Remove the support bracket clamps on the inlet pipe and inlet pipe extension.
3. Separate and remove the inlet pipe from the inlet pipe extension.
4. Clean inlet pipe mounting flange of the exhaust manifold.

Installation

1. Place the new inlet pipe in position and loosely install the retaining clamps at both ends.
2. Install the support bracket clamps on the inlet pipe and inlet pipe extension.
3. Properly position the inlet pipe and support brackets and tighten all clamps and nuts to specifications (Part 26-01).

4. Check the exhaust system for leaks.

INLET PIPE EXTENSIONS

Removal

1. Loosen the inlet pipe extension to muffler clamp (Fig. 6).
2. Loosen the inlet pipe or inlet pipe adaptor to inlet pipe extension clamp and slide it onto the inlet pipe or inlet pipe adaptor.
3. Disconnect the inlet pipe extension support bracket from the inlet pipe extension clamp.
4. Remove the inlet pipe extensions from the vehicle.
5. Remove the clamp retaining the flex tube to the inlet pipe extension and separate the two inlet pipe extensions.

Installation

1. Extend the flex pipe to 15 1/2 inches. Position the flex pipe to the inlet pipe extension and install the clamp (Fig. 6).
2. Position the inlet pipe extensions to the inlet pipe and muffler.
3. Position the inlet pipe to inlet pipe extension and inlet pipe extension to muffler clamps.
4. Connect the inlet pipe extension support bracket to the clamp retaining the two inlet pipe extensions together.
5. Tighten all clamps to specifications (Part 26-01).

MUFFLER

Removal

1. Remove the two muffler retaining clamps (Fig. 6).
2. Remove the muffler and outlet pipe from the inlet pipe extension.
3. Remove the outlet pipe from the muffler.

Installation

1. Place the outlet pipe on the new muffler.
2. Place the outlet pipe and muffler assembly on the inlet pipe extension and loosely install the two muffler retaining clamps.
3. Position the outlet of the pipe towards the right hand curb.
4. Tighten the muffler clamps to specification (Part 26-01).
5. Check the exhaust system for leaks.

MUFFLER OUTLET PIPE

Removal

1. Remove the muffler to outlet pipe clamp.
2. Remove the outlet pipe and rain cap.

Installation

1. Place a new outlet pipe in position. The pipe outlet should be towards the right hand curb.
2. Install and tighten the muffler to outlet pipe clamp to specifications (Part 26-01).
3. Install the rain cap as shown in Fig. 6.
4. Check the exhaust system for leaks.

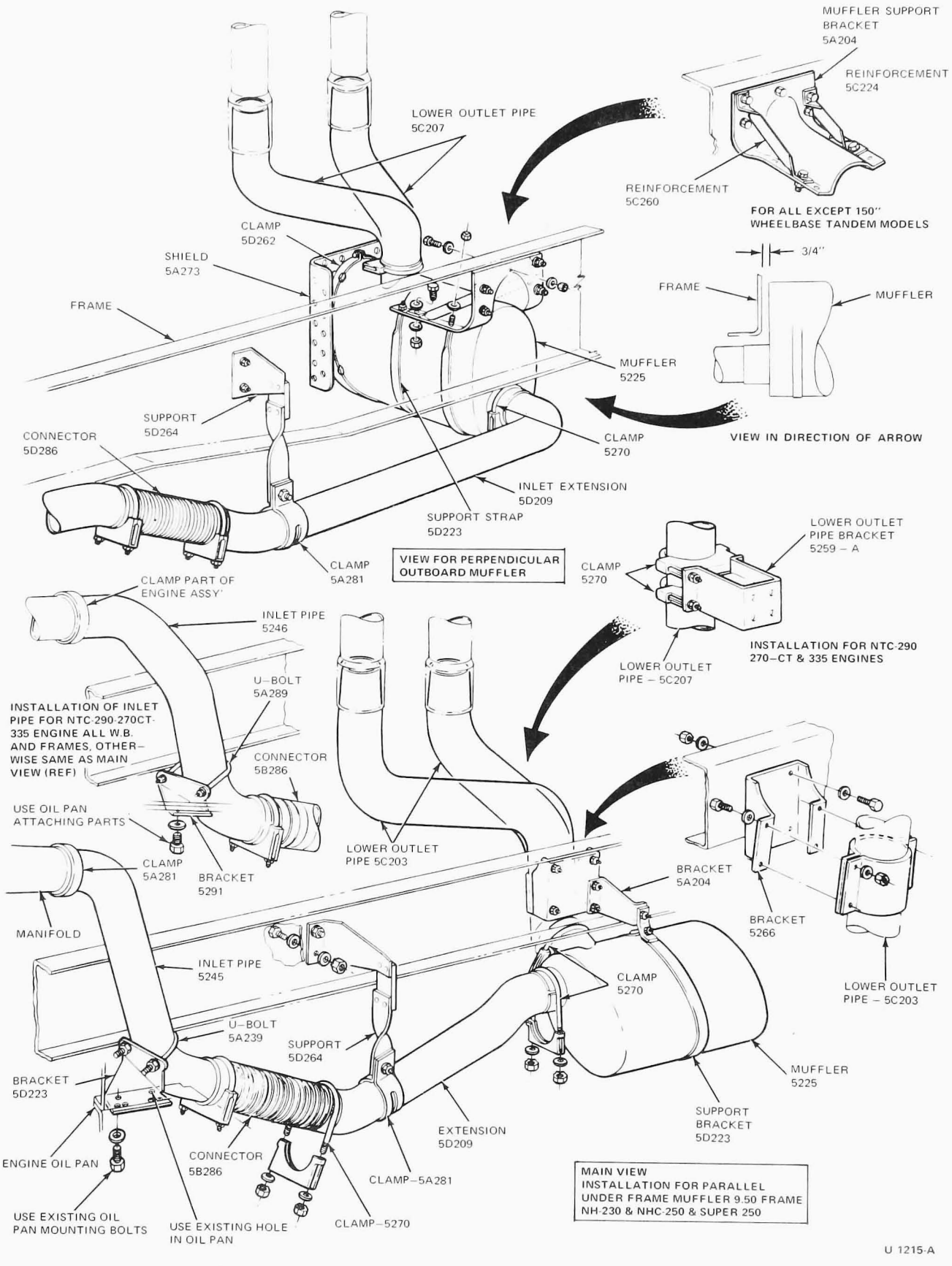

FIG. 1 LN-, LNT-, L-, LT-, LTS-9000 Series—Cummins NTC, NHCT, NH and NHC Engines—Vertical Outlet

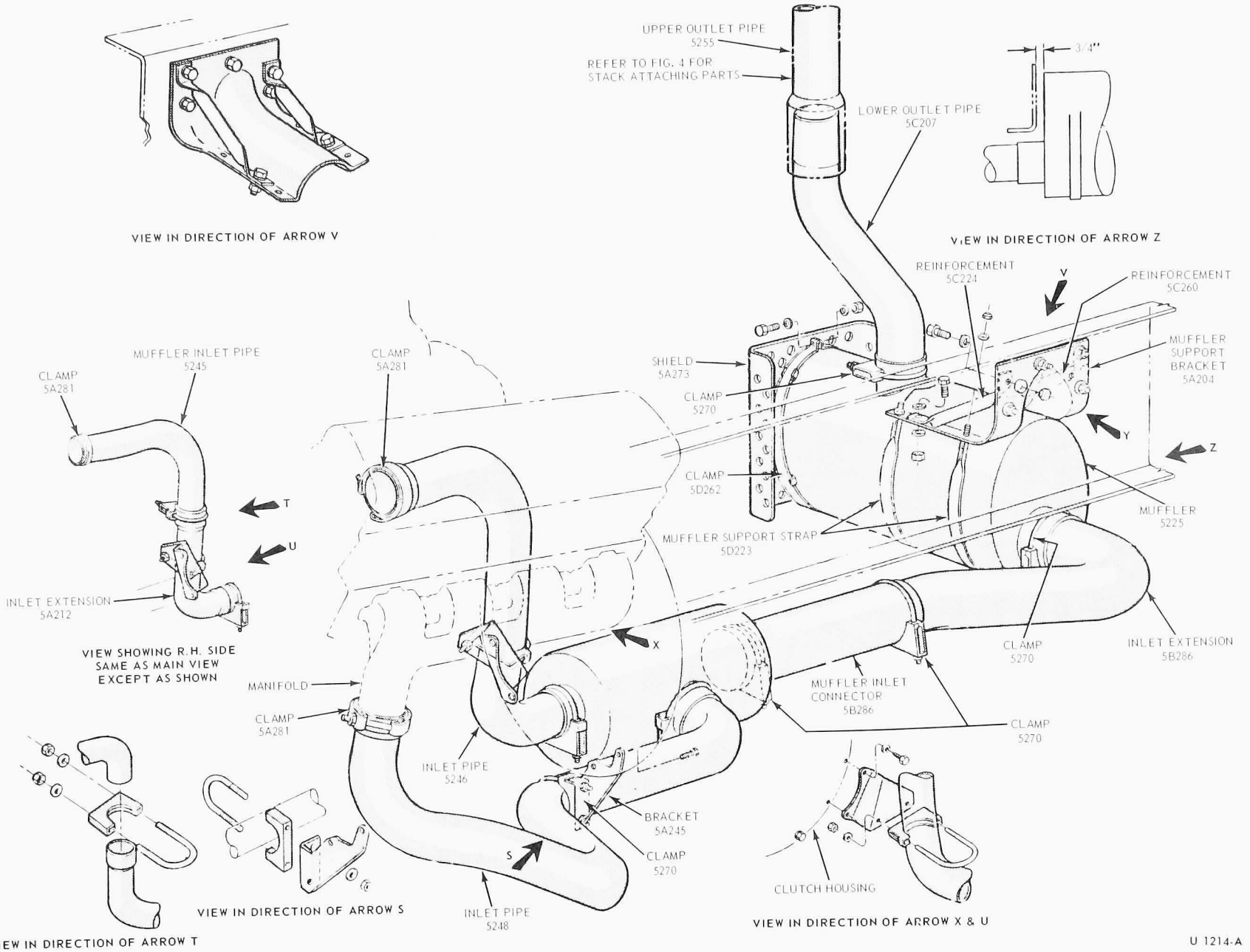

FIG. 2 LN-, LNT-9000 (138 and 150 inch wheelbase) Series—Cummins NTC, NHCT, NH and NHC Engines—Vertical Outlet

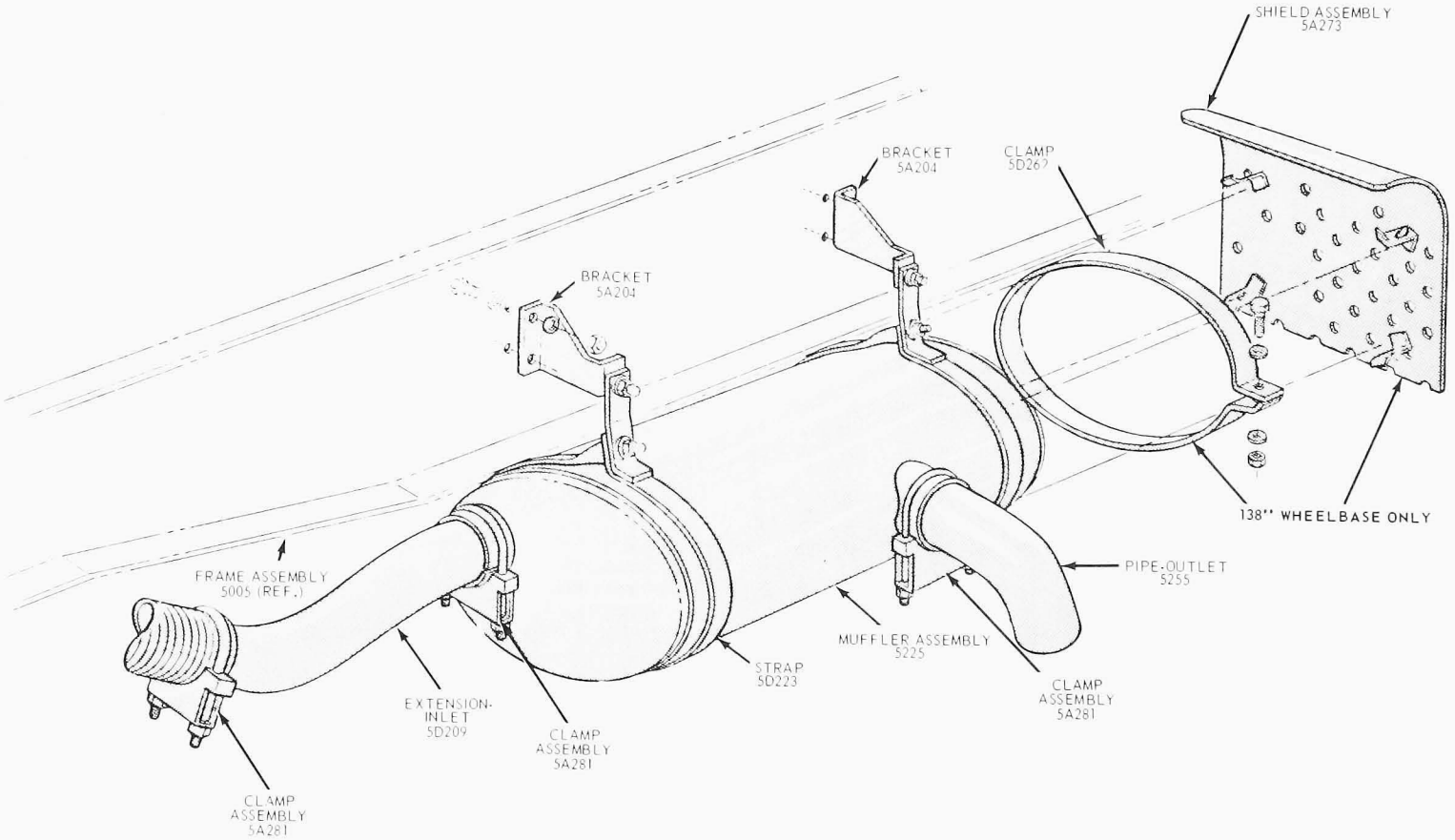

FIG. 3 L-, LT-9000 and LN-, LNT-9000 Series—Cummins NH and NHC Engines—Horizontal Outlet

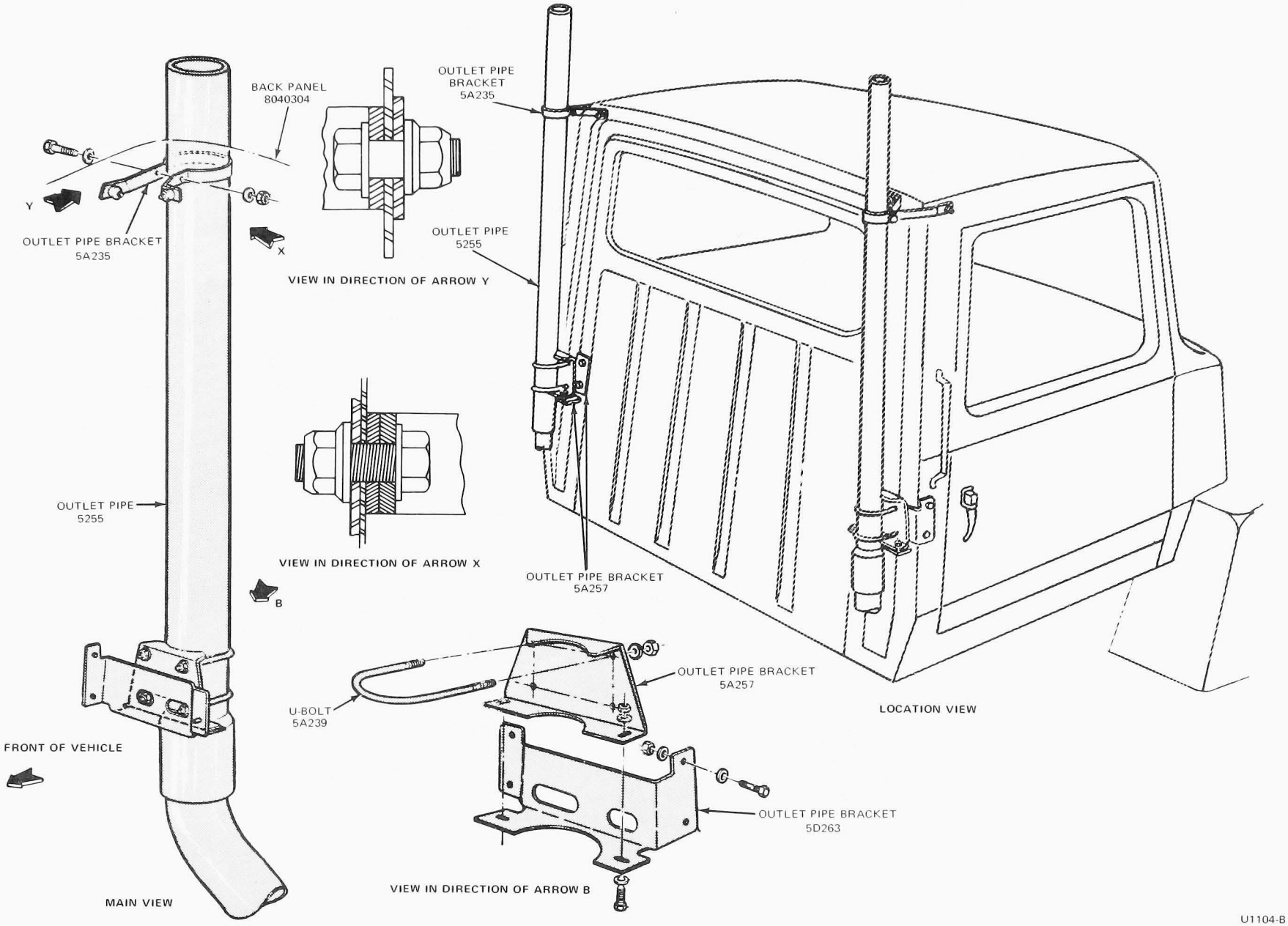

FIG. 4 Exhaust System Vertical Outlet Pipes—Cummins Diesel NH and NTC Engines

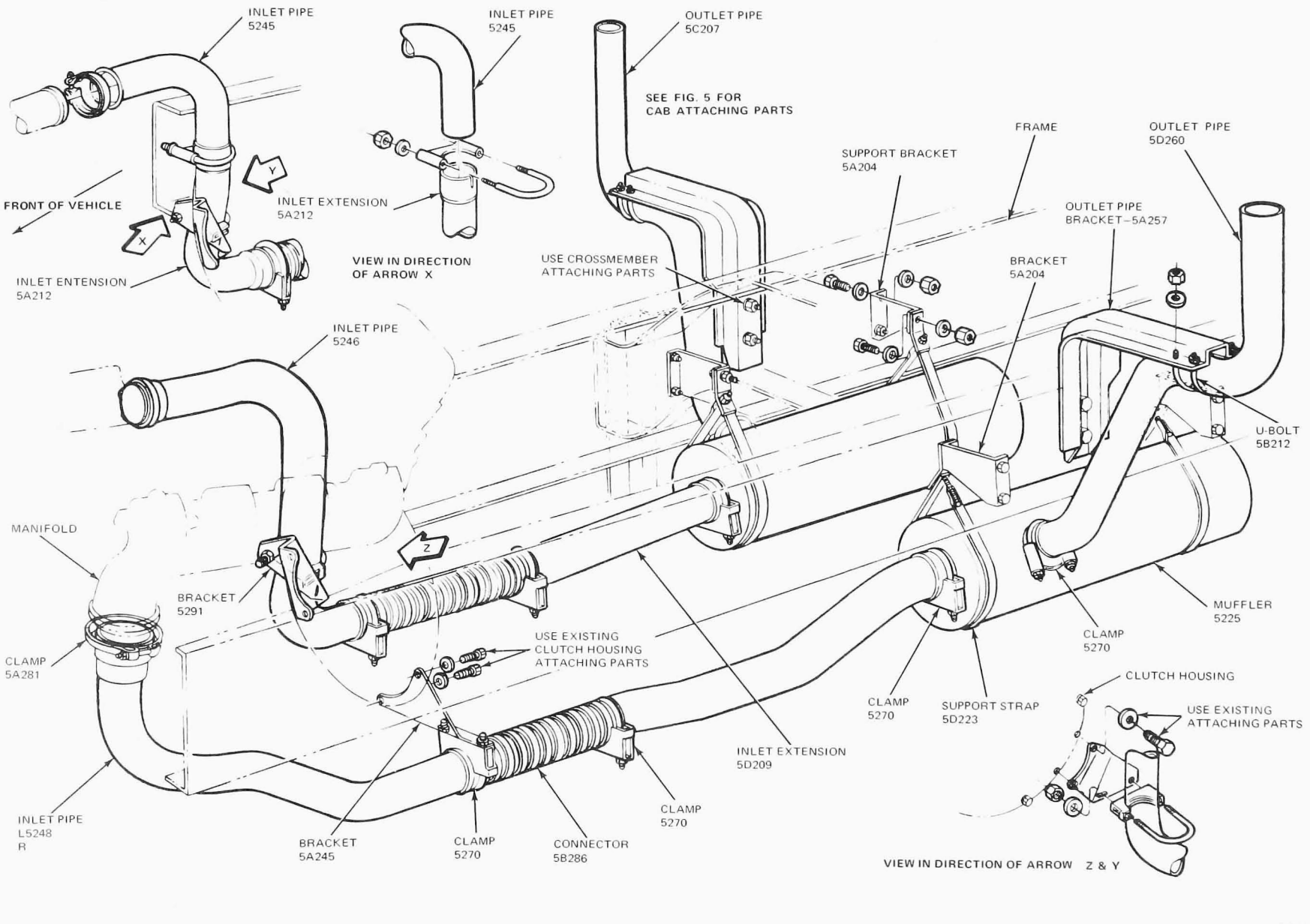

FIG. 5 L-and LT-9000 Series—Cummins

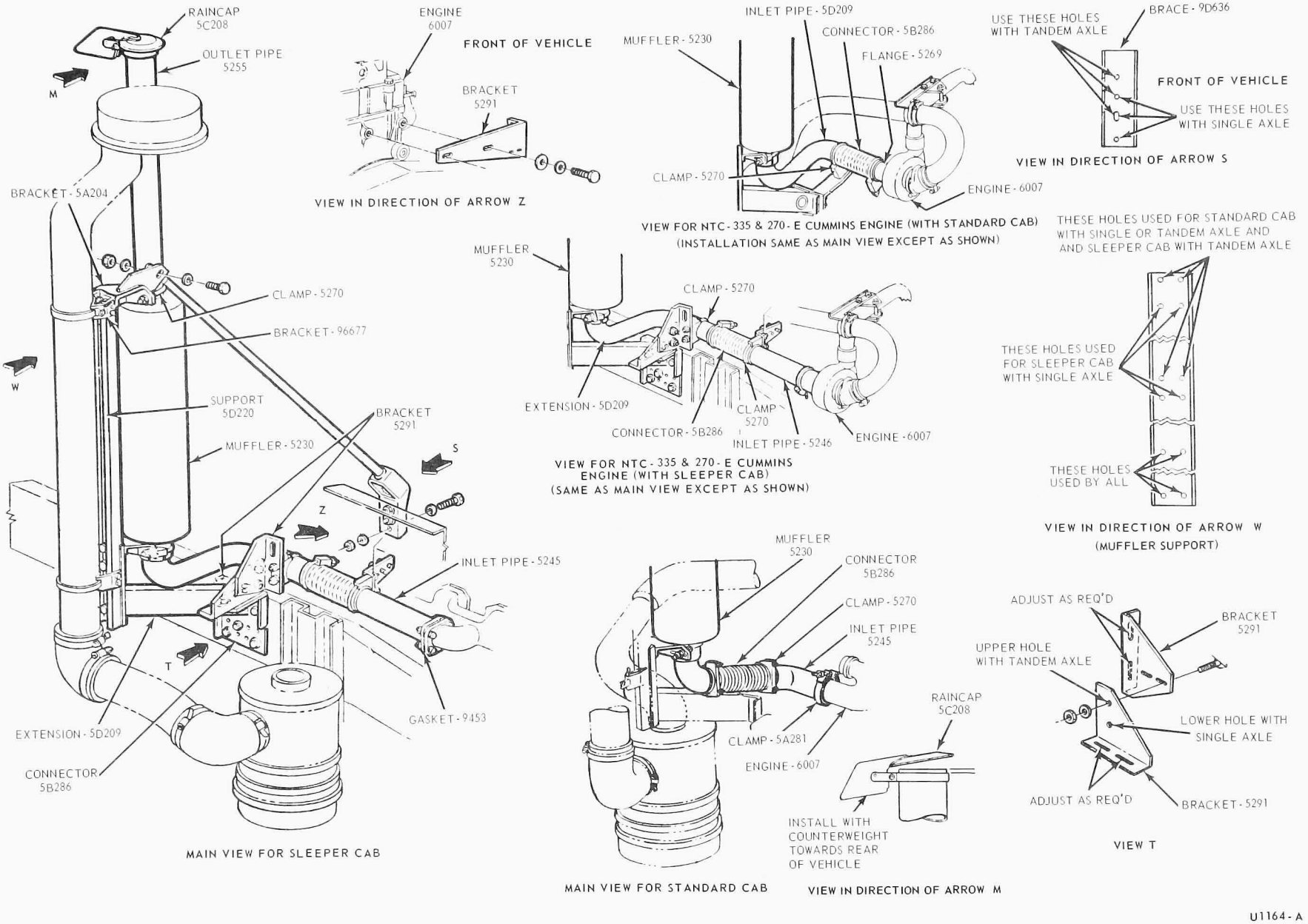

FIG. 6 W-, WT-9000 Series—Cummins NH and NTC-335 Vertical Outlet

PART 26-32 Detroit Diesel Exhaust Systems

Applies To LN, LT 8000, LNT 8000-9000, LN 9000 and W, WT 9000

COMPONENT INDEX	Page
INLET PIPE	
LN and LT 8000 Series	
Removal and Installation	32-01
LNT 8000-9000 and LN 9000	
Removal and Installation	32-01
W- and WT-Series	
Removal and Installation	32-01
INLET PIPE EXTENSIONS	
Removal and Installation	32-02
MUFFLER	
LN and LT 8000 Series	
Removal and Installation	32-02
LNT 8000-9000 and LN 9000	
Removal and Installation	32-02
W- and WT-Series	
Removal and Installation	32-02
MUFFLER INLET REAR PIPE AND FLEX CONNECTOR	
Removal and Installation	32-02
OUTLET PIPE	
LN and LT 8000 Series	
Removal and Installation	32-02
LNT 8000-9000 and LN 9000	
Removal and Installation	32-02
W- and WT-Series	
Removal and Installation	32-02
OUTLET PIPE FLEX CONNECTOR AND EXTENSION	
Removal and Installation	32-03
SPECIFICATIONS	01-02

REMOVAL AND INSTALLATION

Brackets, clamps and insulators should be replaced if they are damaged or badly corroded. Do not attempt to repair these parts.

Typical exhaust systems are shown in Figs. 1 thru 6.

The following procedures apply to the right or left installation for the dual exhaust system, unless otherwise noted.

INLET PIPE LN-AND LT-8000-SERIES

Removal

1. Remove the clamp securing the inlet pipe to the muffler.
2. Remove the attaching nuts securing the inlet pipe to the exhaust manifold.
3. Separate the inlet pipe from the exhaust manifold and the muffler.
4. Remove the mounting gasket and clean the exhaust manifold flange(s).

Installation

1. Position the inlet pipe in the muffler. Loosely install the retaining clamp.
2. Place a new gasket on the exhaust manifold flange and position the inlet pipe to the exhaust manifold. Loosely install the attaching nuts.
3. Adjust the system. Torque all attaching nuts and bolts to specifications in Part 26-01.
4. Check the system for leaks.

LNT-8000-9000 AND LN-9000—6-71 ENGINE

Removal

1. Loosen the retaining clamps securing the front and rear inlet pipes to the flex connector.
2. Remove the front inlet pipe to manifold clamp. Slide the flex connector rearward and disconnect it from the front inlet pipe. Remove the inlet pipe from the exhaust manifold. Remove the U-bolt and bracket from the inlet pipe.
3. Clean the mounting surface on the exhaust manifold and inlet pipe.

Installation

1. Position the bracket on the inlet pipe. Tighten the U-bolt nuts so that they are snug, but not tight.
2. Position the inlet pipe on the exhaust manifold and loosely install the retaining clamp. Slide the flex connector forward and engage with the inlet pipe.
3. Properly position the inlet pipe, bracket and flex connector, then tighten the clamps and nuts to specifications (Part 26-01).
4. Check the exhaust system for leaks.

W-AND WT-SERIES—6-71 ENGINE

Removal

1. Remove the inlet pipe to engine and inlet pipe to inlet pipe extension clamps.
2. Remove the support bracket clamps on the inlet pipe and inlet pipe extension.
3. Separate and remove the inlet pipe from the inlet pipe extension.
4. Clean inlet pipe mounting flange of the exhaust manifold.

Installation

1. Place the new inlet pipe in position and loosely install the retaining clamps at both ends.
2. Install the support bracket clamps on the inlet pipe and inlet pipe extension.
3. Properly position the inlet pipe and support brackets and tighten all clamps and nuts to specifications (Part 26-01).
4. Check the exhaust system for leaks.

W-AND WT-SERIES—8-71 ENGINE

Removal

1. Remove the inlet pipe(s) to inlet pipe

adapter clamp(s) and inlet pipe(s) to engine clamp(s).
2. Remove the inlet pipe(s).
3. Clean the exhaust manifold flange(s).

Installation

1. Place the new inlet pipe(s) in position and install the exhaust manifold to inlet pipe retaining clamp(s).
2. Position the inlet pipe to inlet pipe adapter clamp.
3. Tighten all clamps to specifications (Part 26-01).
4. Check the exhaust system for leaks.

MUFFLER INLET REAR PIPE AND FLEX CONNECTION

LNT-8000-9000 AND LN-9000—6-71 ENGINE

Removal

1. Loosen the flex connector retaining clamps and slide the flex connector forward.
2. Loosen the rear inlet pipe clamp at the muffler and remove the inlet pipe. Remove the flex connector by sliding it rearward.

Installation

1. Slide the flex connector on the front inlet pipe. Position the rear inlet pipe on the muffler and engage with the flex connector by sliding the connector rearward.
2. Properly position the inlet rear pipe and flex connector and install the three retaining clamps. Tighten the clamps to specifications (Part 26-01).
3. Check the exhaust system for leaks.

INLET PIPE EXTENSIONS

W-AND WT-SERIES

Removal

1. Loosen the inlet pipe extension to muffler clamp.
2. Loosen the inlet pipe to inlet pipe extension clamp and slide it onto the inlet pipe.
3. Remove the inlet pipe extensions from the vehicle.

Installation

1. Extend the flex pipe. Position the flex pipe to the inlet pipe extension and install the clamp.
2. Position the inlet pipe extensions to the inlet pipe and muffler.
3. Position the inlet pipe to inlet pipe extension and inlet pipe extension to muffler clamps.
4. Tighten all clamps to specifications (Part 26-01).

MUFFLER

LN-AND LT-8000 SERIES

Removal

1. Remove the retaining clamp securing the muffler to the outlet pipe and separate the outlet pipe from the muffler.
2. Remove the clamp securing the muffler to the inlet pipe.
3. Loosen the muffler support bracket clamps.
4. Separate the muffler from the inlet pipe and remove it from the vehicle.

Installation

1. Slide the muffler through the retaining clamps and position it on the inlet pipe. Loosely install the retaining clamp.
2. Position the outlet pipe to the muffler and loosely install the retaining clamp.
3. Align the system and torque the attaching nuts and bolts to the specifications in Part 26-01.
4. Check the system for leaks.

LNT-8000-9000 AND LN-9000—6-71 ENGINE

Removal

1. Loosen the muffler inlet and outlet pipe clamps at the muffler flanges. Slide the clamps forward onto the muffler inlet and outlet pipes.
2. Loosen the attaching bolts securing the muffler support brackets to the muffler.
3. Slide the muffler rearward to remove it from the muffler inlet and outlet pipes and the muffler support bracket.

Installation

1. Slide the new muffler through the muffler support brackets and position the muffler inlet and outlet flanges within the inlet and outlet pipe.
2. Tighten the muffler support bracket attaching nuts to specifications (Part 26-01). Properly position the inlet and outlet pipe retaining clamps. Tighten the clamps to specifications.
3. Check the exhaust system for leaks.

W-AND WT-SERIES

Removal

1. Remove the two muffler retaining clamps.
2. Remove the muffler and outlet pipe from the inlet pipe extension.
3. Remove the outlet pipe from the muffler.

Installation

1. Place the outlet pipe on the new muffler.
2. Place the outlet pipe and muffler assembly on the inlet pipe extension and loosely install the two muffler retaining clamps.
3. Tighten the muffler clamps to specification (Part 26-01).
4. Check the exhaust system for leaks.

OUTLET PIPE

LN-AND LT-8000 SERIES

Removal

1. Remove the clamp securing the outlet pipe to the muffler.
2. Remove the outlet pipe.

Installation

1. Position the outlet pipe to the muffler and loosely install the retaining clamp(s).
2. Align the position of the outlet pipe and torque the attaching nuts to the specifications in Part 26-01.
3. Check the system for leaks.

LNT-8000-9000 AND LN-9000—6-71 ENGINE

Removal

1. Loosen the outlet pipe retaining clamp at the muffler. Loosen the flex connector clamps. Remove the outlet pipe support bracket clamps.
2. Disconnect the flex connector from the outlet pipe and remove the outlet pipe from the muffler.

Installation

1. Position the flex connector lower clamp and the muffler clamp on the new outlet pipe.
2. Position the outlet pipe on the muffler outlet flange, and connect the outlet pipe to the flex connector. Loosely install the outlet pipe support bracket clamp.
3. Properly position the outlet pipe, and tighten the flex connector and outlet pipe clamps to specifications (Part 26-01).
4. Check the exhaust system for leaks.

W-AND WT-SERIES

Removal

1. Remove the muffler to outlet pipe clamp.
2. Remove the outlet pipe.

Installation

1. Place a new outlet pipe in position.
2. Install and tighten the muffler to outlet pipe clamp to specifications (Part 26-01).
3. Check the exhaust system for leaks.

OUTLET PIPE FLEX CONNECTOR AND EXTENSION

LNT-8000-9000 AND LN-9000

Removal

1. Loosen the flex connector lower clamp at the outlet pipe and slide the clamp onto the outlet pipe. Remove the outlet pipe extension retaining clamps.
2. Remove the outlet pipe extensions and the connector as a unit and disconnect them.

Installation

1. Install the connector on the outlet pipe extension. Install the outlet pipe extension and flex connector on the outlet pipe. Loosely install the extension pipe clamps, and the flex connector lower clamp in their proper position.
2. Properly position the connector on the outlet pipe and tighten the flex connector lower clamp to specifications (Part 26-01). Position the outlet pipe extension in the flex connector and tighten the lower and upper retaining clamps to specifications.
3. Check the exhaust system for leaks.

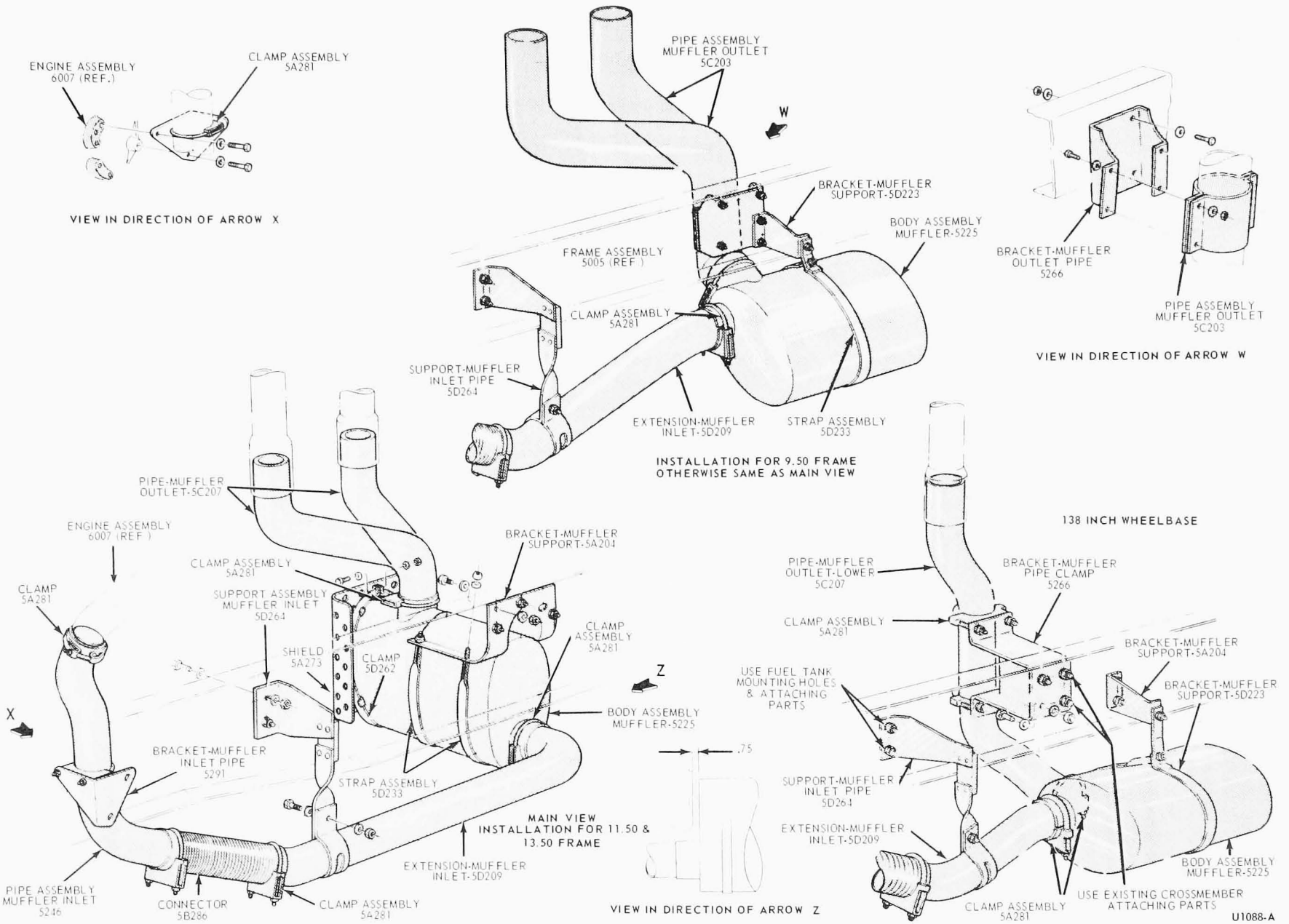

FIG. 1 L, LT, LN and LNT-9000 Series Detroit Diesel 6-71 Engine — Vertical Outlet

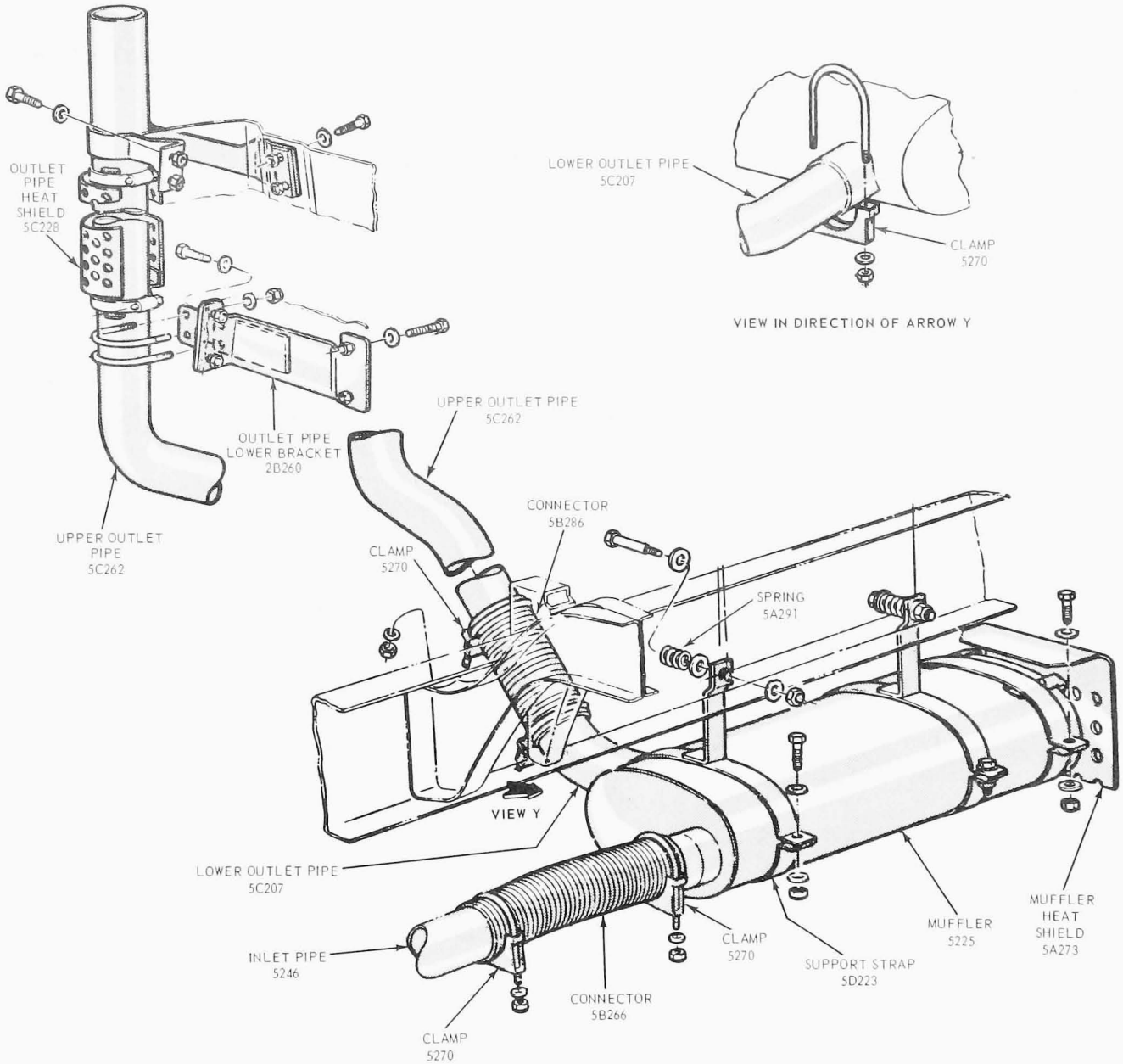

FIG. 2 L, and LT Series Detroit Diesel 8V-71 Engine—Single Vertical Outlet

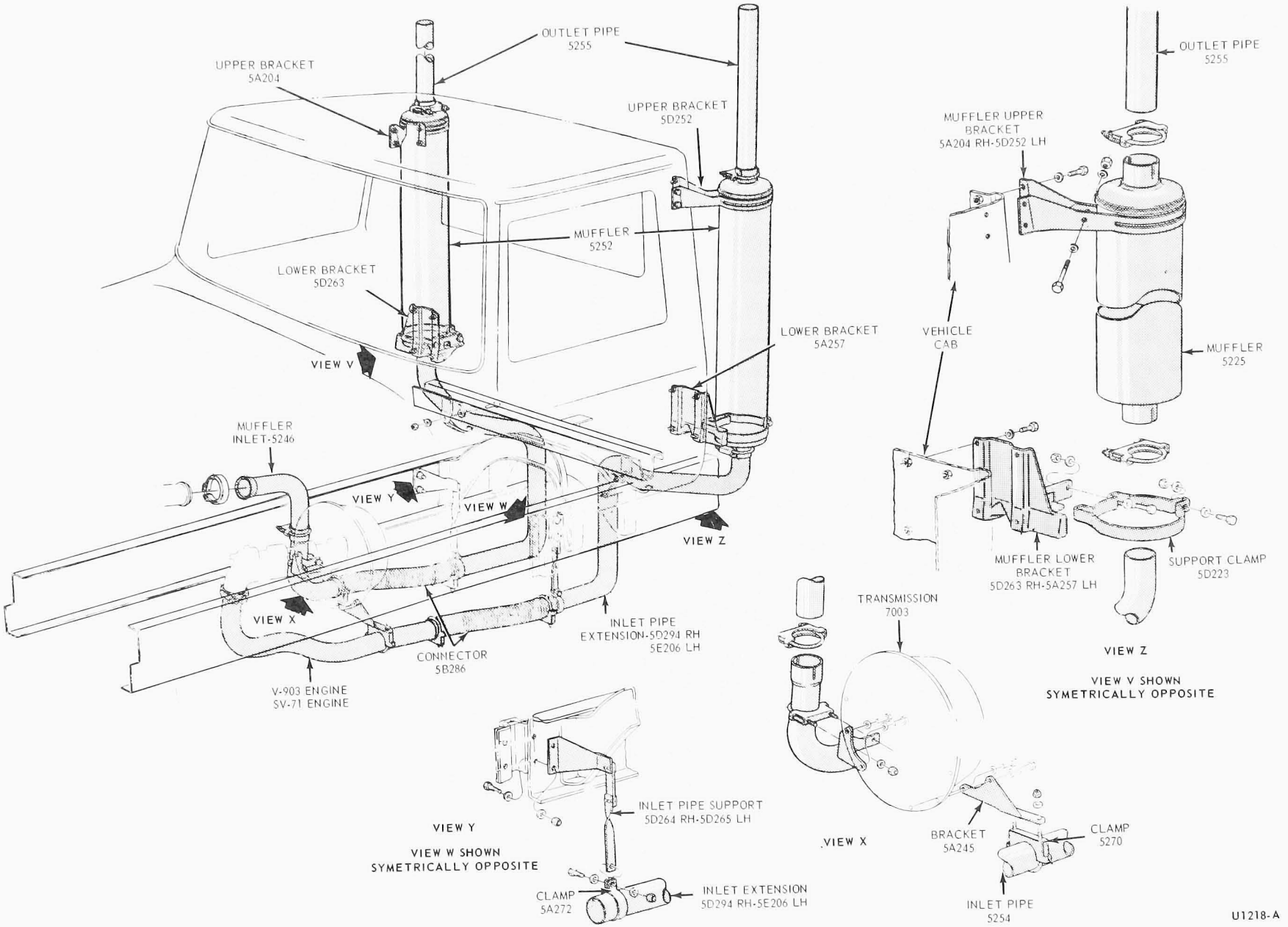

FIG. 3 L, LT-900 Series Detroit Diesel 8V-71 Engine—Dual Vertical Outlet

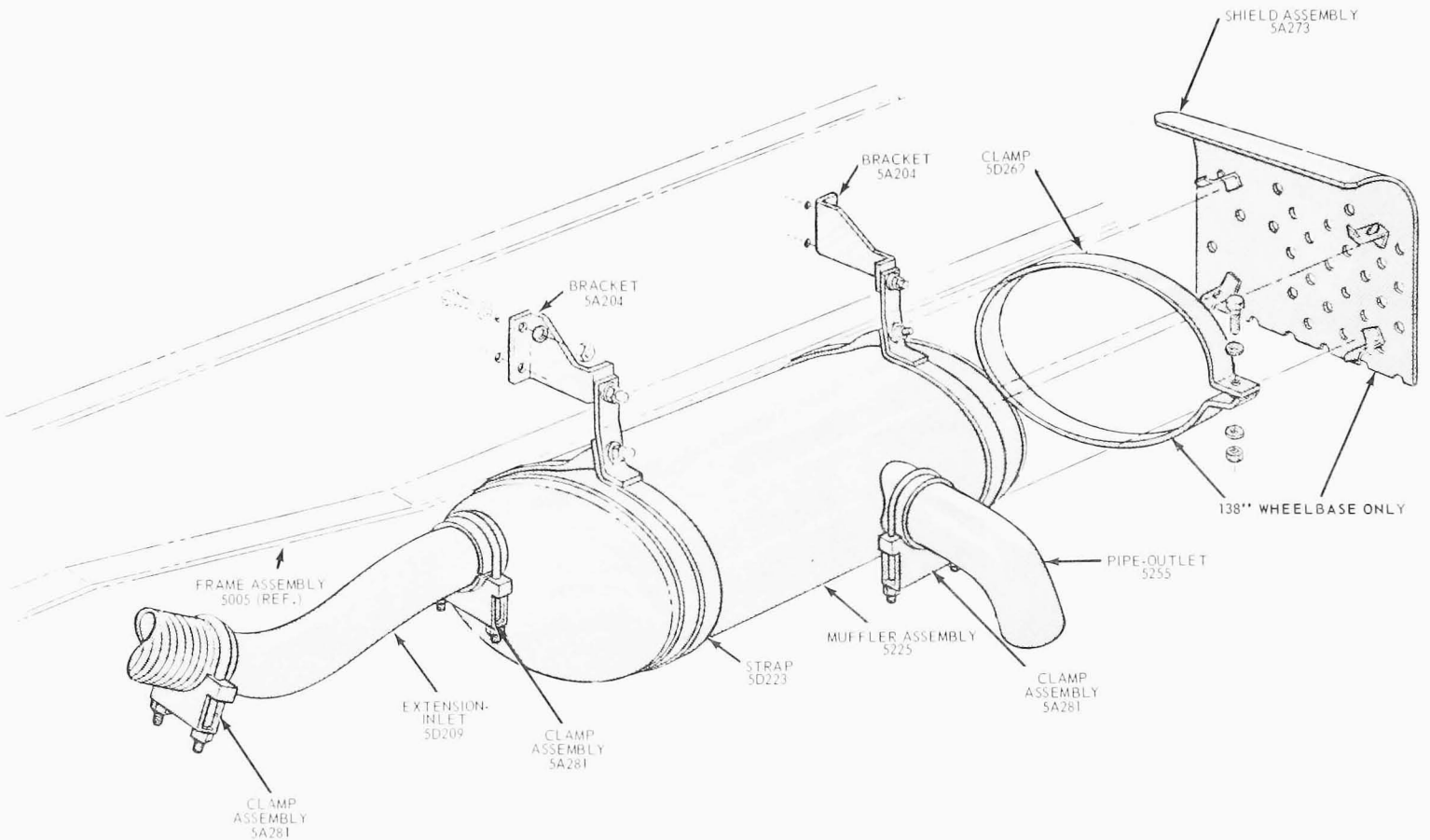

FIG. 4 L, LT, LN and LNT-9000 Series Detroit Diesel 6-71 Engine—Horizontal Outlet

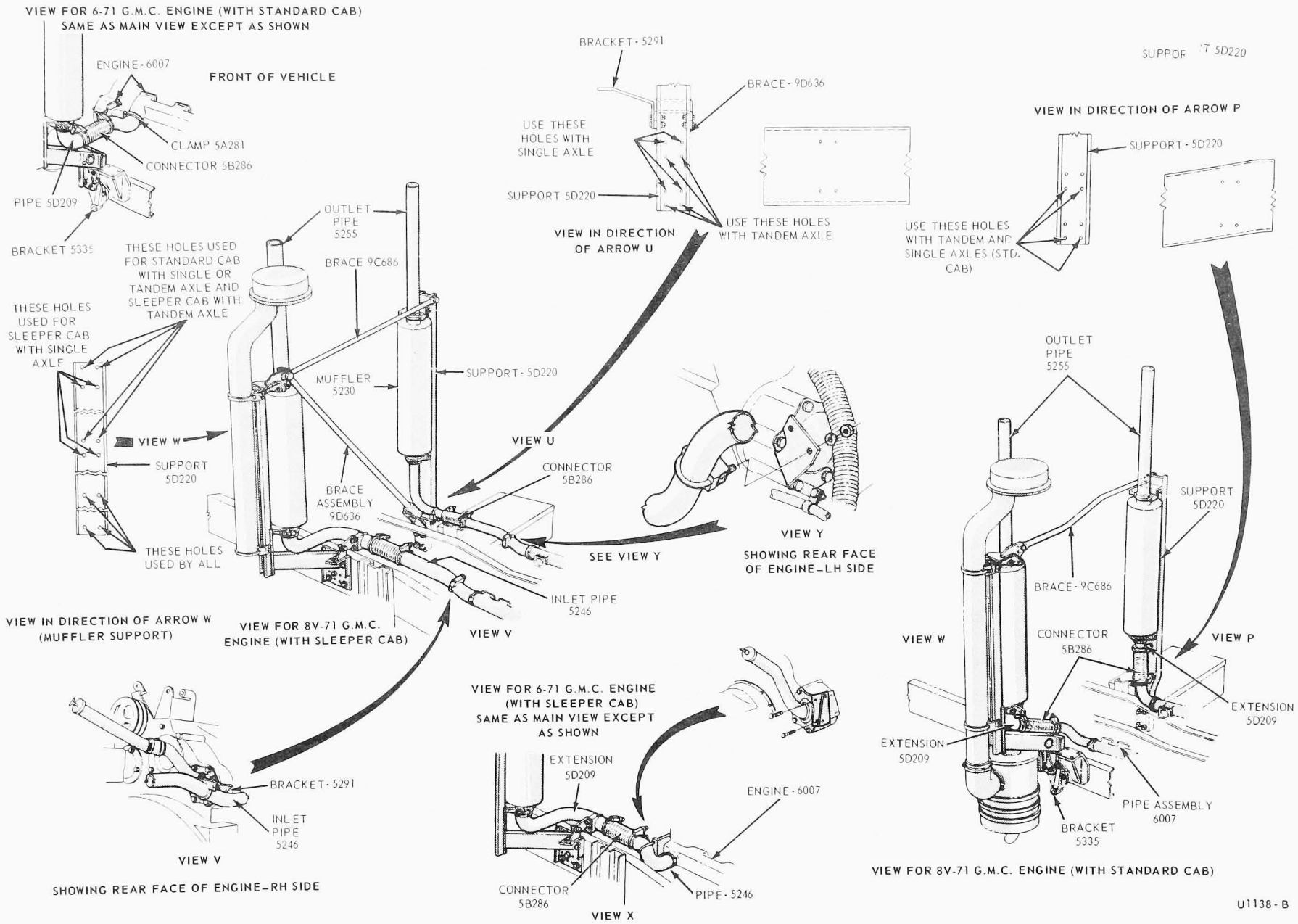

FIG. 5 W, WT-9000 Series Detroit Diesel 8V-71 and 6-71 Engines—Vertical Outlet

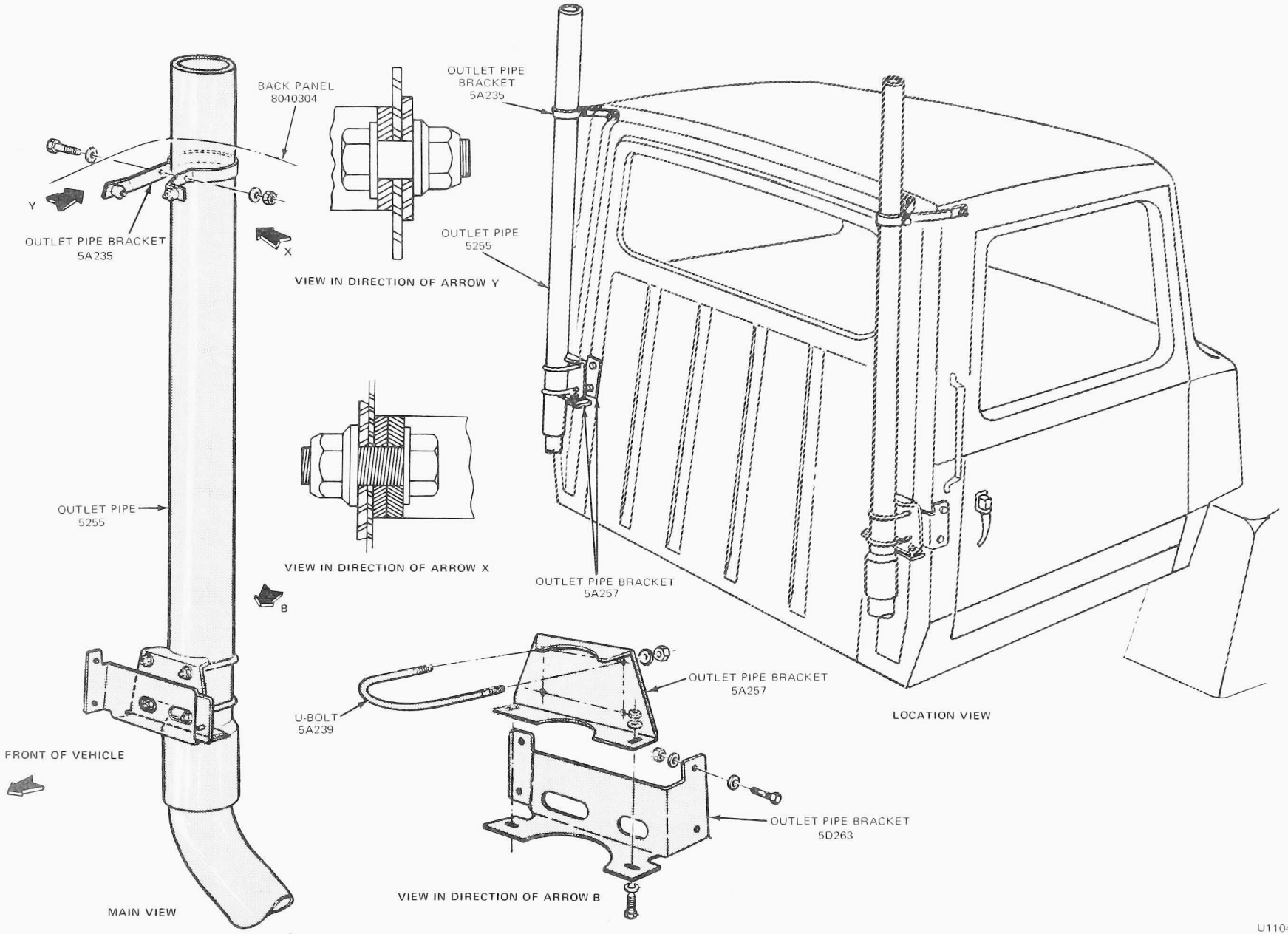

FIG. 6 Exhaust System Vertical Outlet Pipes — Detroit Diesel 6-71 Single and 8V-71 Dual

Cooling System

GROUP 27

PART 27-02	PAGE	PART 27-07	PAGE
General Cooling System Service	27-02-01	Radiator Automatic Shutter	27-07-01
PART 27-04			
Radiators	27-04-01		

PART 27-02 General Cooling System Service

Applies To All Models

COMPONENT INDEX	Page	COMPONENT INDEX	Page
COOLING SYSTEM		CORROSION RESISTOR	
Description and Operation	02-01	Removal and Installation	02-03
Draining and Filling	02-02	WATER FILTER AND CONDITIONER	
		Maintenance	02-03

DESCRIPTION AND OPERATION

COOLING SYSTEM

Correct coolant level is essential for maximum circulation and adequate cooling. In addition, for the cooling system to perform its function, it must receive proper care. This includes keeping the radiator fins clean and a periodic inspection of the cooling system for leakage.

Use care when removing the radiator cap to avoid injury from escaping steam or hot water.

Do not remove the radiator cap on vehicles equipped with a coolant recovery system. Add coolant to the plastic bottle only. Maintain level at the specified cold or hot fill mark.

When cooling system is drained, fill radiator with coolant, vent the system by disconnecting heater upper hose and add fluid to specified mark on plastic bottle.

In production, the cooling system is filled with a 45-55 (50-50 for Canada and export) solution of Ford Permanent Anti-freeze and water which prevents corrosion, keeps the cooling system clean, provides anti-freeze protection to -20 (-35 for Canada and export) degrees F in winter and provides for higher summer operation temperatures.

For the most effective cooling system operation, this mixture strength should be maintained all year round and in all climates.

All coolant added should be the specified mixture of Ford permanent anti-freeze and water. If Ford Permanent Anti-freeze is not available, another reputable permanent anti-freeze may be used and diluted with an equal quantity of water.

Ordinary tap water may be used in an emergency except in areas where the water is known to be exceptionally hard or to have a high alkali content. The cooling system should be drained and flushed and the proper mixture of antifreeze added as soon as possible.

To avoid possible overheating in very hot weather, do not use mixtures with more than 50 percent anti-freeze except in areas where anti-freeze protection below -35 degrees F is required. In this case, refer to the coolant mixture chart on the Ford permanent anti-freeze container.

On diesel engines using water only in the cooling system, add a can of Radiator Rust Inhibitor whenever the system is completely refilled.

Do not add any radiator sealers containing water soluble oil to the cooling system as it will make the corrosion resistor inoperative.

A standard ethylene gycol hydrometer can be used to check the

protection level of the long-life coolant.

Do not backflush cooling systems that have a water shut-off valve in the heater system, or damage to the valve can result.

To prevent damage to the cooling system during periods of below freezing ambient temperature, when water or anti-freeze is added to the supply tank, always operate the engine at fast idle for 30 minutes before letting the truck stand with the engine off for prolonged periods. This will allow a uniform mixture throughout the cooling system and prevent damage by freezing, when sufficient anti-freeze is used.

If the fan drive belt(s) are noisy, check the tension of the belt(s) to make certain it is within specifications. Also, check for misaligned pulleys. If the drive belt(s) are worn or frayed, replace, following the procedure in Part 27-04.

DRAINING AND FILLING THE COOLING SYSTEM

100-900 SERIES TRUCKS

To prevent loss of anti-freeze when draining the radiator, attach a hose on the radiator drain cock and drain the coolant from the radiator into a clean container.

To drain the radiator, open the drain cock located at the bottom of the radiator and remove the radiator or supply tank cap. The cylinder block of the V-8 engine is drained by removing the drain plugs located on both sides of the block. The 6-cylinder engines have one drain plug located at the left rear of the cylinder block.

To fill the cooling system, install the cylinder block drain plug(s) and close the radiator drain cock. On 100-750 Series trucks, disconnect the heater outlet hose at the water pump to bleed or release trapped air in the system. When the coolant begins to escape, connect the heater outlet hose.

On C-800-900 Series trucks with super duty engines, open the air vent valve located at the front of the intake manifold to bleed the system. When coolant begins to escape at the opening, close the valve finger-tight. Do not overtighten, as the air vent valve is designed to be closed finger-tight only.

C-Series trucks equipped with Ford Diesels have an auxiliary air bleed connecting the supply tank to the top of the radiator tank. L-Series trucks have an automatic air bleed.

On downflow radiators, operate the engine and add more coolant, if necessary, to fill the radiator to the proper level. On trucks without a supply tank, fill the radiator one inch above the baffles (or core). On trucks equipped with a supply tank, fill the supply tank 2/3 full.

On L-Series gasoline and Ford V-8 Diesel engines, with crossflow radiators, fill until the coolant is 1 inch from the top of the tank with engine cold. **(Caution—Do not operate engine if coolant level is below sightglass.)** (Refer to Fig. 1).

On L-Series—Cummins and Detroit Diesel engines, fill until the coolant is visible through the upper sightglass with engine cold. **(Caution—Do not operate engine if coolant level is below the lower sightglass.)** (Refer to Fig. 2).

After the initial fill, the coolant level will drop approximately 1 quart after the engine has been operated about 20 minutes at 2000 rpm. This is due to the displacement of entrapped air. Refill radiator as required.

CUMMINS NH-SERIES ENGINE

To prevent loss of anti-freeze when draining the radiator, attach a hose to the radiator drain cock and drain the coolant from the radiator into a clean container.

To drain the radiator, open the drain cock located at the bottom of the radiator. The cylinder block is drained by opening one drain plug located at the right rear of the block. Also, drain the oil cooler and heat exchanger (if so equipped).

To fill the cooling system, close the drain cocks, venting is automatic.

Operate the engine and add more coolant, if necessary, to fill the radiator to the proper level. On trucks without a supply tank, fill the radiator one inch above the baffle on downflow radiators. On crossflow radiators, fill to the sight glass. On trucks equipped with a supply tank, fill the supply tank 2/3 full. After the initial fill, the coolant level will drop approximately 1 quart when the engine has been operated about 20 minutes at 2000 rpm. This is due to the displacement of entrapped air.

DETROIT DIESEL ENGINES

To drain the radiator, open the drain petcock at the bottom of the radiator and drain the coolant into a container to prevent loss of anti-freeze. The radiator will drain faster if the filler cap is removed.

To drain the cylinder block, open the two drain petcocks on each side of the engine block and on the bottom of the oil cooler.

To fill the cooling system, close the drain petcocks and pour the coolant into the radiator. Operate the engine until operating temperature is obtained and check the coolant level.

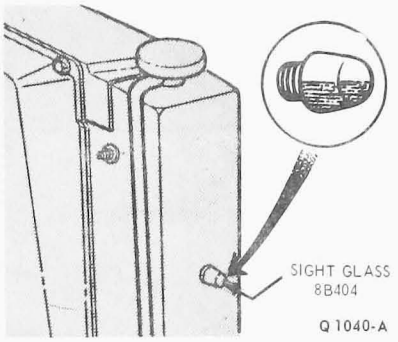

FIG. 1 Sightglass—L-Series—Gasoline and Ford V-8 Diesel Engines with Crossflow Radiator

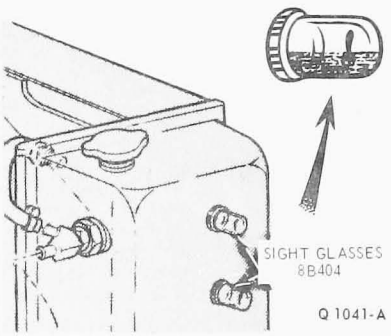

FIG. 2 Sightglass—L-Series—Cummins and Detroit Diesel Engines

FORD V-8 DIESEL ENGINES

To drain the radiator, open the drain petcock at the bottom of the radiator and drain the coolant into a container to prevent loss of anti-freeze. The radiator will drain faster if the filler cap is removed.

To drain the cylinder block, open the drain cocks at the thermostat housing and oil cooler, and remove the drain plugs from the rear of the cylinder block (one on each side).

To fill the cooling system, install the cylinder block plugs and close the drain cocks at the radiator, thermostat housing and oil cooler. Pour the coolant into the radiator. Operate the engine until operating temperature is reached and check the coolant level.

CORROSION RESISTOR

CUMMINS DIESEL ENGINES

Removal and Installation

Check the coolant chromate concentration as described under Check Engine Coolant in the Cummins Engine Operation and Maintenance Manual.

To change the filter element:

1. Close the shut-off valves on the inlet and drain lines of the Filter assembly. Unscrew the drain plug at the bottom of the housing (Fig. 3).
2. Remove the cover retaining bolts. Remove the cover (with hose attached) and gasket. Discard the gasket. Remove the upper plate, element, lower plate and the spring from the housing. Discard the element.
3. Polish the surface of the lower plate. If less than one-half of the upper and lower surfaces of the plate can be exposed by polishing, replace the plate.
4. Install the spring and lower plate. Remove the transparent bag from the new resistor element, and install the element in the housing.
5. Install the upper plate, gasket and cover. Install the drain plug, and open the shut-off valves in the corrosion resistor inlet and drain lines. **Do not add any radiator sealers containing water soluble oil to the cooling system as it will make the corrosion resistor and lower plate inoperative.**

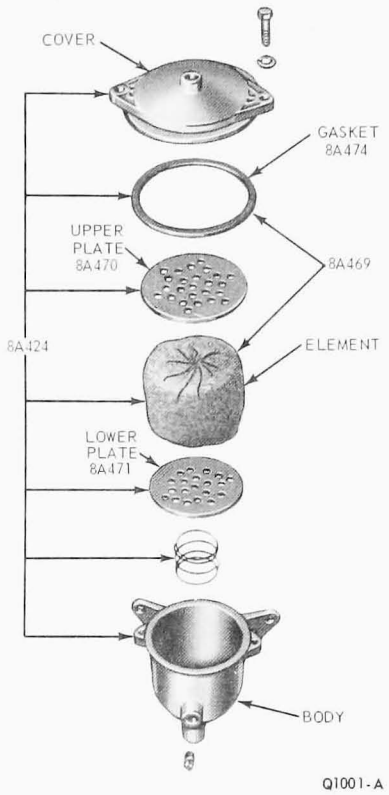

FIG. 3 Corrosion Resistor

WATER FILTER AND CONDITIONER

DETROIT DIESEL ENGINES

For maintenance of the engine coolant and water filter, refer to the Detroit Diesel Engine Maintenance Manual.

PART 27-04 Radiators

This Information Applies To: All Models

COMPONENT INDEX	Page
ADJUSTMENTS	
Belt Tension	
100-350 Series – Gasoline Engines	04-03
500-900 Series – Gasoline Engines	04-03
Cummins NH Series Diesel Engine	04-03
Detroit Diesel Engine	04-04
Ford V-8 Diesel Engine	04-03
CLEANING AND INSPECTION	
Cooling System	
Cummins Diesel Engines	04-14
Detroit Diesel Engines	04-14
Ford Gasoline Engines	04-14
Ford V-8 Diesel Engines	04-14
DESCRIPTION	
Coolant Recovery System	04-02
Radiator	04-02
Supply Tank – Radiator	04-02
REMOVAL AND INSTALLATION	
Drive Belts	
Cummins Diesel	04-04
Ford V-8 Diesel	04-05
Fan	04-04
Fan Belt	
Detroit Diesel	04-04
Gasoline Engines	04-04
Radiator	
6 Cyl. and V-8 – Econoline	04-06
6 Cyl. – Bronco	04-07
V-8 – Bronco	04-07
240 and 300 6 Cyl	
P-Series	04-07
F-100-350 Series	04-08
B- and F-500-600 Series	04-08
C-500-600 Series	04-09
302, 360 and 390 V-8	
Gasoline Engines	
F-100-350 Series	04-09

COMPONENT INDEX	Page
REMOVAL AND INSTALLATION - Cont.	
330, 361, and 391 V-8	
Gasoline Engines	
B- and F-500-750 Series	04-10
C-500-800 Series	04-10
401, 477 and 534 V-8	
Gasoline Engines	
C-Series	04-11
Cummins NH – Series Diesel – W – Series	04-11
Cummins NTC and Detroit Diesel – W – Series	04-12
Ford V-8 Diesel Engines	
F- and B-Series	04-12
C-Series	04-12
L-, LN-, LT-, LNT- Series – Gasoline and Diesel	04-13
Radiator Hose	04-05
Supply Tank – Radiator	04-14
Thermostat	
6 Cyl. Engines – Gasoline	04-05
V-8 Engines – Gasoline	04-05
Cummins C-180 Series Diesel	
Cummins NH Series Diesel	04-06
L-, LN-, LT-, LNT-, and W – Series Trucks	04-06
Detroit Diesel	04-06
Ford V-8 Diesel	04-06
SPECIFICATIONS	04-15
TESTING	
Corrosion Resistor – Cummins Diesel Engine	04-03
Pressure Test	04-02
Thermostat	
Cummins Diesel Engine	04-03
Detroit Diesel Engine	04-03
Ford V-8 Diesel Engine	04-03
Gasoline Engines	04-02
Water Filter and Conditioner – Detroit Diesel	04-03

DESCRIPTION AND OPERATION

RADIATOR

All radiators except 8-cylinder Bronco and L-Series trucks are of the tube and corrugatedfin-core type with the tubes arranged for vertical flow of the coolant. Two header tanks, one on the top and one on the bottom of the radiator provide uniform distribution of the coolant to the tubes. The radiator outlet port (lower header tank) is connected to the water pump inlet port. The radiator inlet port(s) (upper header tank) is connected to the coolant outlet elbow of the engine, thereby permitting coolant circulation through the radiator when the thermostat is open.

The Bronco V-8 and L-Series radiator is of the cross-flow type, with the tubes and fins arranged for horizontal flow. The header tanks are therefore located at the sides of the radiator.

An expansion tank is provided as a means of filling and checking the system.

SUPPLY TANK

C-Series trucks and 8-cylinder Bronco have a separate coolant supply or expansion tank, with the radiator cap on this tank.

On all other trucks the radiator upper header tank serves as the supply and expansion tank.

COOLANT RECOVERY SYSTEM

Some F-100, F-250 6-cylinder models and Bronco units with 8-cylinder engines are equipped with a coolant recovery system. Do not remove the radiator cap on these vehicles— add coolant to the plastic bottle only. Maintain level at the specified cold or hot fill mark.

When cooling system is drained, fill radiator with coolant according to the instructions in Part 27-02.

TESTING

PRESSURE TEST

It is recommended that a cooling system pressure test gauge be used to properly test the system for:

1. Blown or leaking cooling system sealing gaskets.
2. Internal or external cooling leakage.
3. Pressure cap malfunction.

Some modification of existing pressure testers may be required in order to use this procedure.

1. Shut the engine off. **To prevent loss of coolant and to avoid the danger of being burned, place a cloth over the cap and rotate the cap slowly counterclockwise to first stop and allow pressure to escape completely. Then turn cap again slowly counterclockwise to remove.**
2. After the cooling system pressure has been released, remove the radiator cap, wet the rubber sealing surface and reinstall cap tightly on the radiator.
3. Disconnect the electrical connector from the engine temperature sending unit and remove the temperature sending unit from the manifold.

With the radiator cap installed, only a small amount of coolant will be lost when the sending unit is removed.

4. Install an adaptor fitting (3/8 N.P.T. male thread on one end, and a hose connection on the other end to accommodate the tester hose) tightly into the intake manifold or cylinder head in place of the sending unit.
5. Remove the radiator overflow hose from the retainer clips. Make sure the hose is firmly installed on the radiator overflow tube and is in good condition. Insert the free end of the overflow hose into a container of water.
6. Attach the pressure pump and gauge to the adapter fitting and pressurize the cooling system until bubbles are observed in the water container. Discontinue pumping when bubbles appear.

When the bubbles cease, read the pressure gauge. The gauge reading is the pressure relief of the cap and should be within specifications. If the pressure reading exceeds the specified limit, replace the radiator cap.

7. If bubbles continue and the pressure drops below 10 psi, the radiator cap is not holding pressure. Release pressure and wash cap in clean water to dislodge any foreign matter from the valves. Check the rubber sealing surface of the cap and also the cap sealing surface in the radiator neck. Inspect the cam lock flanges on both sides of the filler neck for maximum cap engagement.
8. Recheck the cooling system as outlined in step 6. If the cap still does not hold pressure, the cap is damaged and must be replaced. Recheck system after a new cap is installed to assure that the system will now hold pressure.
9. If the bubbles in the water container cease and the radiator cap is within pressure specifications, observe gauge reading for approximately two minutes. Pressure should not drop during this time.
10. If pressure drops, check for leaks at the engine to heater core hoses, engine to radiator hoses, by-pass hose, water valve hose (A/C equipped), thermostat housing gasket, etc. Any leaks which are found must be corrected and the system rechecked.
11. If the system holds pressure, remove the radiator cap to release the pressure, then reinstall the cap.
12. Remove the adapter from the manifold or cylinder head and reinstall the temperature sending unit. Check coolant level and replenish if necessary with the correct coolant solution.

THERMOSTAT TEST

TRUCKS EQUIPPED WITH GASOLINE ENGINES

It is good practice to test new thermostats before installing them in the engine.

Remove the thermostat and immerse it in boiling water. Replace the thermostat if it does not open more than 1/4 inch.

If the problem being investigated is insufficient heat, the thermostat should be checked for leakage. This may be

done by holding the thermostat up to a lighted background. Light leakage around the thermostat valve (thermostat at room temperature) is unacceptable and the thermostat should be replaced. It is possible, on some thermostats, that a slight leakage of light at one or two locations on the perimeter of the valve may be detected. This should be considered normal.

TRUCKS EQUIPPED WITH CUMMINS DIESEL ENGINES

Suspend a thermometer and the thermostat to be tested in a container of water so that neither one touches the container. Heat the water container until the thermostat begins to open and note the temperature. Continue heating the water until the thermostat is fully open. The temperature stamped on the thermostat is that at which the thermostat should begin to open. The fully open temperatures for the thermostats are listed in Specifications.

TRUCKS EQUIPPED WITH DETROIT DIESEL ENGINES

Refer to the Detroit Diesel Maintenance Manuals for the test procedures.

TRUCKS EQUIPPED WITH FORD V-8 DIESEL ENGINES

Refer to the appropriate Caterpillar Diesel engine service manual.

CORROSION RESISTOR TEST

CUMMINS DIESEL ENGINES

Check the coolant chromate concentration to determine if the corrosion resistor element should be changed.

WATER FILTER AND CONDITIONER

DETROIT DIESEL ENGINES

For coolant system checks, refer to the Detroit Diesel Engine Maintenance Manual.

ADJUSTMENTS

BELT TENSION—GASOLINE ENGINES

100-350 SERIES TRUCKS

1. Install the belt tension tool on the drive belt(s) (Fig. 1) and check the tension following the instructions of the tool manufacturer.
2. If adjustment is necessary, loosen the alternator mounting bolts and move the alternator adjusting arm bolt. Move the alternator toward or away from the engine until the correct tension is obtained (Specifications). Remove the gauge. Tighten the alternator adjusting arm bolt and the mounting bolts. Install the tension gauge and check the belt tension.

500-900 SERIES TRUCKS

1. Install the belt tension tool on the drive belt(s) (Fig. 1) and check the tension following the instructions of the tool manufacturer.

The tension is checked between the water pump pulley and the alternator pulley on single or double fan drive belts and all alternator and water pump fan drive belts. The tension on separate fan drive belts is checked between the fan pulley and the crankshaft pulley. The tension of the air compressor drive belt is checked between the compressor pulley and the fan pulley or the crankshaft (C-Series). The belt tensions are given in Specifications.

2. If adjustment is necessary, follow the applicable procedure.

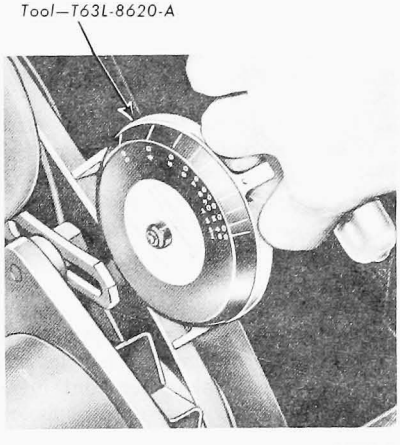

FIG. 1 Checking Drive Belt Tension

BELT TENSION—DIESEL ENGINES

FORD V-8 DIESEL ENGINES

To check belt tension, exert 25 lb. force on the belt midway between the pulleys. Correctly adjusted belts will deflect 1/2 to 3/4 inch.

Single or Double Fan Belts

Loosen the alternator mounting bolts and the alternator adjusting bracket bolt. Move the alternator generator toward or away from the engine until the correct belt tension (Specifications) is obtained. Tighten the alternator mounting bolts and the adjusting bracket bolt before checking the tension.

Separate Fan Belt

Loosen the fan bracket mounting bolts. Slide the bracket up or down until the correct belt tension (Specifications) is obtained. Tighten the bracket bolts before checking the tension.

On a truck equipped with an air compressor, it may be necessary to loosen the compressor drive belt in order to obtain proper fan drive belt adjustment. Adjust the compressor drive belt after the fan drive belt adjustment is complete.

Air Compressor Belt

Loosen the air compressor mounting bolts and slide the compressor in its bracket until the correct tension (Specifications) is obtained. Tighten the compressor mounting bolts before checking the deflection. **Adjust the air compressor drive belt whenever the fan drive belt is adjusted or replaced. Adjust the air compressor drive belt last.**

CUMMINS NH-SERIES DIESEL ENGINES FAN BELTS

Loosen the adjusting screw locknut on the fan hub. Adjust the fan hub adjusting screw to obtain the specified fan belt tension (Specifications) and tighten the locknut.

Water Pump Belts

1. Loosen the alternator adjusting bracket and the alternator to mounting bracket bolts. Loosen the water pump retainer mounting bolts.
2. Pivot the water pump assembly to obtain the specified drive belt tension (Specifications) and tighten

the water pump retainer bolts to specifications.
3. Adjust the alternator to obtain the specified drive belt tension (Specifications) and tighten the adjusting bracket bolt and alternator to mounting bracket bolts.

DETROIT DIESEL ENGINES

If the belt needs adjustment, loosen the support bracket mounting bolts and the adjusting bolt. Move the bracket up or down, as required, to obtain the specified belt tension (Specifications) and tighten the adjusting bolt. Check the belt tension again. When the belt is properly adjusted, tighten the bracket mounting bolts.

REMOVAL AND INSTALLATION

FAN

ALL EXCEPT ECONOLINE WITH 6-CYLINDER ENGINES

Removal and Installation
1. Examine the fan mounting system to determine whether or not the drive belt tension should be relieved. Loosen fan drive belt(s) tension, if necessary.
2. Remove the fan blade retaining bolts and remove the fan and spacer (if so equipped).
3. Position the spacer (if so equipped) and fan blade on the water pump hub or the crankshaft damper (low-mount fan). Tighten the retaining bolts.
4. Adjust fan belt(s) tension.

ECONOLINE WITH 240 6-CYLINDER ENGINE

Removal and Installation

The radiator must be removed in order to remove the fan. Refer to the instructions in this Section for procedures.
1. With the radiator removed, release the fan belt tension and remove the bolts retaining the fan and spacer to the water pump pulley and remove the fan, spacer and retaining bolts.
2. Position the fan, spacer and bolts to the water pump pulley and install the retaining bolts, torquing to the proper value.
3. Adjust fan belt tension to specifications.
4. Install the radiator per instructions.

FAN BELT

ALL GASOLINE ENGINES

Removal and Installation
1. Loosen the alternator mounting bolts and the alternator adjusting arm bolt. Move the alternator toward the engine. Remove the belt from the alternator, crankshaft pulley, and water pump pulley. Lift the belt(s) over the fan.
2. Place the belt(s) over the fan. Insert the belt(s) in the water pump pulley, crankshaft pulley, and alternator pulley grooves. Adjust the belt tension to specifications.

CUMMINS NH DIESEL ENGINES

Removal and Installation
1. Loosen the cooling fan hub locknut and back-off the adjusting screw.
2. Remove the drive belts from the compressor pulley and the fan hub.
3. Position the new drive belts on the cooling fan hub and the compressor pulley. Adjust the tension of the drive belts to specifications, and tighten the fan hub locknut.

DETROIT DIESEL ENGINES

Removal and Installation
1. Loosen the adjusting bolt on the top of the fan pulley support bracket.
2. Loosen the adjusting bracket assembly bolts and let the bracket slide down.
3. Slip the belts off the pulleys and over the fan.
4. Position the new belts on the pulleys and adjust the belts by following the procedure under Belt Tension—Detroit Diesel Engines in this section of the book.

DRIVE BELTS

CUMMINS NH DIESEL ENGINES

Removal and Installation
1. Remove the cooling fan drive belts and the power steering pump drive belts from the compressor pulley.
2. Loosen the water pump retaining ring mounting bolts. Loosen the alternator to mounting bracket bolts and the adjusting bracket bolt.
3. Rotate the water pump and remove the drive belt from the compressor pulley and the water pump pulley.
4. Position a new water pump drive belt on the compressor pulley and the water pump pulley. Rotate the water pump to obtain the specified drive belt tension, Specifications, and tighten the retaining ring bolts.
5. Adjust the alternator to obtain the specified belt tension, Specifications, and tighten the adjusting bracket and alternator mounting bolts.
6. Install the power steering pump drive belts and adjust the belt tension to specifications. Install the cooling fan drive belts and adjust the belt tension to specification.

FORD V-8 DIESEL ENGINES—C-SERIES

Removal and Installation

The fan on the C-Series truck is mounted on the crankshaft. A belt from the fan pulley drives the air compressor. The next pulley rearward on the crankshaft drives the power steering pump. A double-grooved pulley at the rear drives the water pump and alternator by means of two belts.

To replace the water pump alternator belts, first loosen the air compressor drive belt idler pulley and remove the air compressor drive belt.

Next, loosen the power steering pump mounting, move the pump inward and remove the power steering pump drive belt.

Loosen the alternator mounting and adjusting bolts, move the alternator

inward and remove the drive belts.

Belts mounted in pairs must be replaced in pairs.

Install the new alternator-water pump belts on the pulleys. Adjust the belts to the specified tension and tighten the alternator mounting and adjusting bolts.

Position the power steering pump drive belt on the pulleys and adjust the belt tension, Specifications. Tighten the power steering pump mounting bolts.

Position the air compressor drive belt on the drive and idler pulleys. Adjust the idler pulley until the drive belt has the specified tension, Specifications. Tighten the idler pulley adjusting bolt.

FORD V-8 DIESEL ENGINES—F-B-SERIES

Removal and Installation

A four-groove pulley is used on the crankshaft. The two grooves nearest the engine are used for the fan, water pump and alternator drive belts. The next groove forward is used for the air compressor drive belt. If a power steering pump is used, it is belt driven from the front pulley groove.

To replace the fan, water pump and alternator belts, first loosen the power steering pump bracket (if so equipped), move the pump inward and remove the power steering pump drive belt. Next loosen the air compressor drive belt idler pulley and remove the air compressor drive belt. Loosen the alternator mounting bolt and the adjusting bolt and remove the two fan belts. **Always replace double belts in pairs.**

Position the fan belts on the pulleys and adjust the tension, Specifications, of the belts by moving the alternator outward. Tighten the alternator mounting and adjusting bolts.

Position the air compressor drive belt on the pulleys and adjust the idler pulley until the drive belt has the specified belt tension, Specifications.

Position the power steering pump drive belt (if so equipped) on the pulleys and move the power steering pump outward until the belt has the specified belt tension, Specifications.

RADIATOR HOSE

Removal and Installation

The cooling system hoses should be replaced whenever they become cracked or deteriorated, or have a tendency to collapse.

Partially drain the cooling system to replace a cooling system upper hose(s). Drain the cooling system to replace the radiator outlet hose.

1. Drain or partially drain the radiator, then loosen the clamps on each end of the hose(s) to be removed. Slide the hose(s) off the connections.
2. Position the clamps on each end of the new hose. Slide the hose onto the connections, then tighten the clamps. **If the connections have a bead around the edges, make sure the clamps are located beyond the beads.**
3. Fill the cooling system with coolant and bleed the system.
4. Operate the engine for several minutes, then check the hose(s) and connections for leaks.

THERMOSTAT REPLACEMENT

Whenever changing the thermostat to a higher or lower temperature range on trucks equipped with automatic shutters, change the shutterstat accordingly to a higher or lower range.

A poppet-type thermostat is used with all engines.

When the thermostat is closed, coolant flows to the water pump through a by-pass passage at the front of the engine. When the thermostat is open, coolant flows through the coolant outlet elbow (thermostat housing) to the radiator.

Super Duty V-8 engines are equipped with a front and a rear thermostat. The front thermostat is mounted inside the water outlet elbow. The rear thermostat is mounted inside the intake manifold at the rear.

The thermostat used in production is a high temperature thermostat for use with a 45-55 mixture of water and permanent-type anti-freeze. A low temperature thermostat should be installed if a non-permanent type anti-freeze and water coolant solution is used (except on trucks with automatic radiator shutters).

Do not attempt to repair the thermostat. It should be replaced if it is not operating properly.

Check the thermostat before installing it, following the procedure under Thermostat Test, Testing.

6-CYLINDER ENGINES—GASOLINE

Replacement of the thermostat in 6-cylinder Econoline vehicles requires removal and installation of the radiator. Refer to the radiator part of this section for instructions on removal and installation. Otherwise, the instructions given below also apply to the 6-cylinder Econoline thermostat installation.

Removal

1. Drain the radiator so that the coolant level is below the thermostat.

On C-Series trucks remove the supply tank hose at the coolant outlet elbow.

2. Remove the coolant outlet elbow retaining bolts. Pull the elbow away from the cylinder head sufficiently to provide access to the thermostat. Remove the thermostat and gasket.

Installation

1. Clean the coolant outlet elbow and cylinder head gasket surfaces. Coat a new gasket with water-resistant sealer. Position the gasket on the cylinder head opening. The gasket must be positioned on the cylinder head before the thermostat is installed.
2. The coolant outlet elbow contains a locking recess into which the thermostat is turned and locked. Install the thermostat with the bridge section in the outlet elbow. Turn the thermostat clockwise to lock it in position on the flats cast into the outlet elbow.
3. Position the coolant outlet elbow against the cylinder head. Install and torque the retaining bolts to specifications.

On C-Series trucks connect the supply tank hose.

4. Fill and bleed the cooling system. Check for leaks and proper coolant level after the engine has reached normal operating temperatures.

V-8 ENGINES—GASOLINE

On 8-cylinder Econoline vehicles, the engine cover and air cleaner must be removed for access to the thermostat. Otherwise, instructions given below also apply to thermostat replacement on this vehicle.

Removal

1. Drain the radiator so that the coolant level is below the thermostat.

On C-Series trucks remove the supply tank hose at the water outlet housing.

2. Disconnect the by-pass hoses at the water pump and intake manifold. Remove the by-pass tube. Remove the water outlet housing retaining bolts. Bend the radiator upper hose upward and remove the thermostat and gasket.

Installation

1. Clean the water outlet housing gasket surfaces. Coat a new water outlet housing gasket with water-resistant sealer. Position the water outlet housing gasket on the intake manifold opening.

2. Install the thermostat in the intake manifold opening with the copper pellet or element toward the engine and the thermostat flange positioned in the recess. If the thermostat is improperly installed, it will cause a retarded flow of coolant.
3. Position the water outlet housing against the intake manifold. Install and torque the retaining bolts to specifications. Install the water by-pass line and tighten hose connections.

On C-Series trucks connect the supply tank hose.

4. Fill and bleed the cooling system. Operate the engine until normal operating temperature is reached; then check the coolant level and check for leaks.

CUMMINS NH-SERIES DIESEL ENGINES—L-, LN-, LT-, LNT-AND W-SERIES TRUCKS

Removal

1. Drain the cooling system to below the thermostat level.
2. Disconnect the oil cooler coolant hose, radiator supply tank vent line, and air compressor coolant line from the thermostat housing.
3. Close the air control valve and disconnect the air hoses from the shutterstat, if so equipped.
4. Remove the thermostat housing retaining bolts. Move the thermostat housing forward and to one side, then remove the thermostat. Discard the gasket.

Installation

1. Clean and apply water-resistant sealer to the gasket surfaces at the coolant manifold and thermostat housing.
2. Position the thermostat in the housing with the V notch at the top to vent as much air as possible. **If the thermostat is not properly installed, an air lock and incomplete coolant circulation may result.**
3. Install a new gasket on the thermostat housing and position the housing to the water manifold. Install and tighten the retaining bolts.
4. Connect the oil cooler coolant hose, radiator supply tank vent line, and air compressor water line to the thermostat housing. Connect the air hoses to the shutterstat and open the air control valve.
5. Fill the cooling system. Operate the engine and check for coolant leaks.

DETROIT DIESEL ENGINES

For thermostat replacement procedures, refer to the appropriate Detroit Diesel Highway Maintenance Manual.

FORD V-8 DIESEL ENGINES

For thermostat replacement procedures, refer to the appropriate Caterpillar Service Manual.

RADIATOR

Radiator shroud note: Fiberglass shrouds are retained to the radiator support with bolts having a flat washer between the bolt head and the fiberglass. Always assemble in this manner.

ECONOLINE

Removal

1. Refer to Fig. 2.
2. Drain the cooling system.
3. Open the hood and raise the support rod to hold the hood open.
4. Disconnect the upper radiator hose at the radiator.
5. Disconnect the lower radiator hose at the radiator.
6. Disconnect the transmission oil cooler lines from the radiator (if so equipped).
7. On a 240-6 only, remove the right hood lock bracket and bolts from the radiator grille.
8. Remove the 4 bolts retaining the

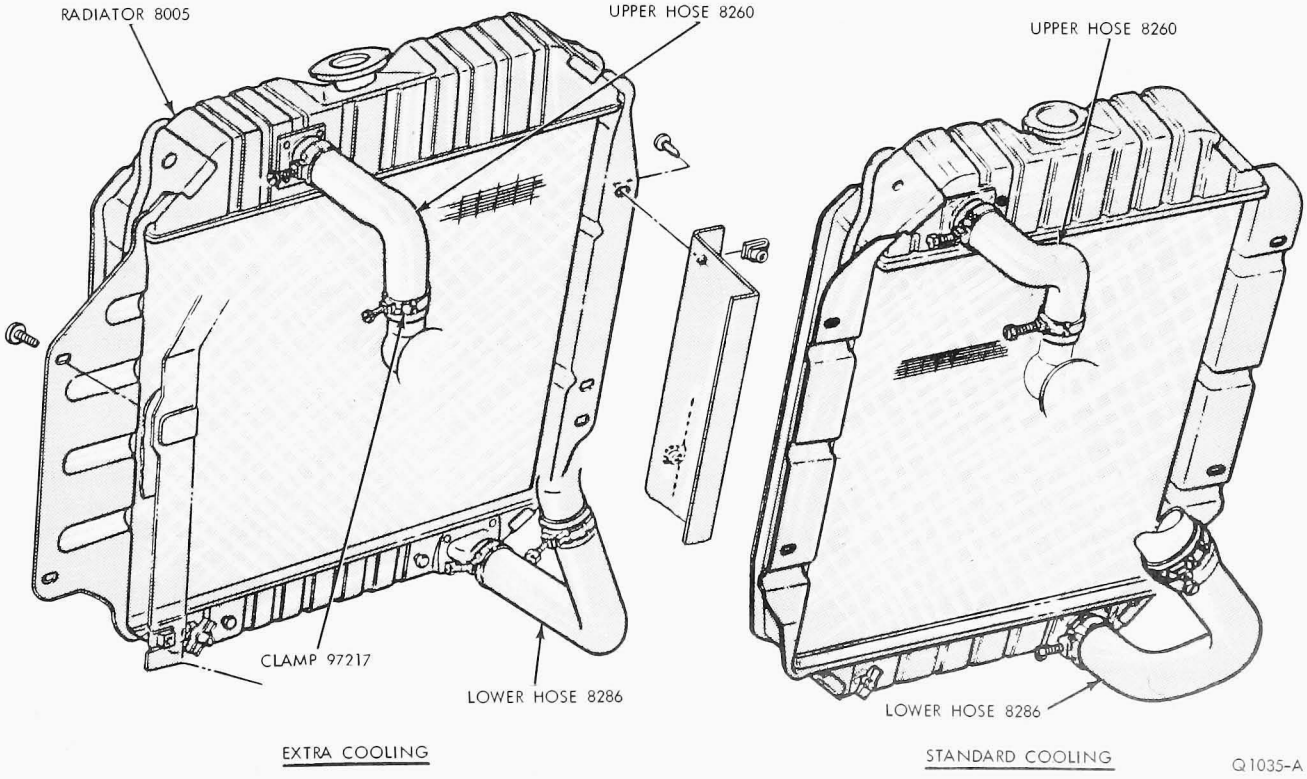

FIG. 2 Radiator and Related Parts—Econoline— Typical

radiator to the radiator support and remove the radiator.

Installation

1. If a new radiator is to be installed, remove the drain cock from the old radiator and install it in the new radiator. On a vehicle with automatic transmission, remove the oil cooler line fittings from the old radiator and install them in the new radiator, using oilresistant sealer M-46-11.

On a vehicle with a coolant recovery system, remove the reservoir from the old radiator and install it on the new radiator.

2. Position the radiator assembly and install the support bolts.
3. Connect the radiator upper and lower hoses.

On a vehicle with automatic transmission connect the oil cooler lines.

4. Install the hood lock bracket and bolts.
5. Close the drain cock. Fill and bleed the cooling system.
6. On 6-cylinder engines equipped with a coolant recovery system completely fill the radiator through the filler cap opening of the radiator upper tank. The cap may be removed by turning to the stop and, pressing down on the cap, force the cap past the **stop** tangs on the filler neck. Engine should be running at idle speed to circulate the coolant and eliminate any trapped air in the system. Install the radiator cap. Fill the coolant reservoir with one quart of coolant. Operate vehicle until normal engine temperature is evident. Check coolant reservoir to see if coolant level is noted at the **Engine Hot** level. If necessary, add coolant to bring to this level.
7. Operate the engine and check for leaks at the hose connections and the automatic transmission oil cooler lines. Check the automatic transmission fluid level.

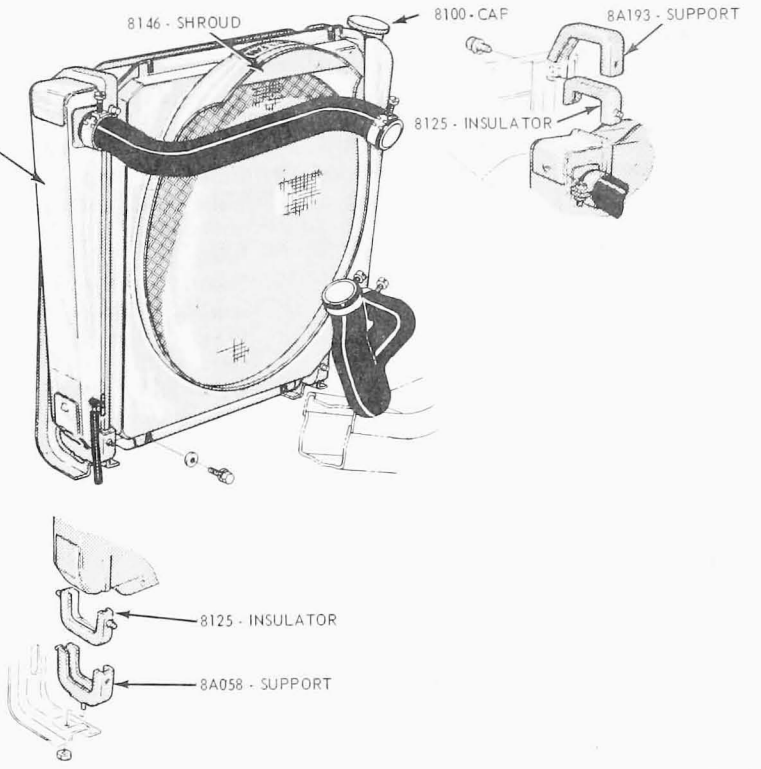

FIG. 3 Radiator and Related Parts—Bronco—Typical

BRONCO (WITH 200 6-CYLINDER ENGINE)

Removal

Refer to Figure 3.

1. Drain the cooling system.
2. Disconnect the upper hose at the radiator.
3. Disconnect the lower hose at the radiator.
4. Remove the radiator retaining screws, and remove the radiator.

Installation

If a new radiator is to be installed, remove the drain cock from the old radiator and, using water-resistant sealer, install it on the new radiator.

1. Position the radiator, and install the retaining screws.
2. Connect the lower hose at the radiator.
3. Connect the upper hose at the radiator.
4. Fill and bleed the cooling system.
5. Operate the engine and check for leaks.

BRONCO (WITH 302 8-CYLINDER ENGINE)

Removal

Refer to Figure 3.

1. Drain the cooling system.
2. Disconnect the transmission cooler lines if so equipped.
3. Disconnect the upper hose at the radiator.
4. Loosen the two shroud lower retaining bolts.
5. Remove the two shroud upper retaining bolts.
6. Position the radiator shroud over the fan, clear of the radiator.
7. Disconnect the lower hose at the radiator.
8. Remove the two radiator upper supports (1 bolt each, Fig. 6) and remove the radiator.

Installation

If a new radiator is to be installed, remove the drain cock from the old radiator and, using water-resistant sealer, install it in the new radiator.

1. Slide the radiator into the lower supports (Fig. 6) and install the upper supports.
2. Connect the lower hose to the radiator.
3. Position the shroud to the radiator and install the retaining bolts.
4. Connect the upper hose to the radiator.
5. Connect the transmission cooler lines if so equipped.
6. Fill the cooling system, bleeding air as necessary.
7. Operate the engine and check for leaks.

P-SERIES (WITH 240, 300 6-CYLINDER ENGINES)

Removal

The 6-cylinder P-Series radiator installations are shown in Fig. 4.

1. Remove the hood. Disconnect the headlights and parking lights at the bullet connectors. Remove the grille, headlights, parking lights, wind deflector and hood lower weatherstrip as an assembly. Drain the cooling system.
2. If equipped with a fan shroud, remove the fan, spacer, water pump pulley and drive belt.

Disconnect the radiator upper hose

at the radiator and the thermostat housing.

3. Disconnect the radiator lower hose at the water pump.

If equipped with an automatic transmission, disconnect the transmission oil cooler line at the radiator lower hose tee.

Remove the radiator retaining bolts and radiator support tie-bar; then remove the radiator and shroud (if so equipped).

Installation

1. If a new radiator is to be installed, transfer the hoses, draincock and fan shroud (if so equipped) to the new radiator. **Apply water-resistant sealer to the threads of the drain cock.**
2. Position the radiator in the chassis and install the retaining bolts and radiator support tie-bar. Connect the radiator upper hose. Connect the transmission oil cooler coolant line (if so equipped) to the radiator lower hose tee. Connect the radiator lower hose.

If equipped with a fan shroud, install the fan, spacer and drive belt. Adjust the belt tension to specifications.

3. Fill and bleed the cooling system. Operate the engine until it reaches normal operating temperature and check the coolant level. Check for leaks.
4. Install the grille, headlights, parking lights, wind deflector and hood lower weatherstrip. Install the hood and retaining bolts; then adjust the hood at the hinge retaining bolts.

F-100-350 SERIES (WITH 240-300 6-CYLINDER ENGINES)

Removal

The F-100-350 radiator installations are shown in Figure 5.

1. Drain the cooling system. Disconnect the radiator upper hose at the coolant outlet elbow and the radiator lower hose at the water pump.

On a truck with an automatic transmission, disconnect the transmission oil cooler coolant line at the radiator.

2. If equipped with a fan shroud, loosen the generator or alternator adjusting arm bolts and loosen the fan belt. Remove the cooling fan retaining bolts, and remove the fan, spacer, water pump pulley and fan belt.
3. Remove the radiator retaining bolts, and remove the radiator and fan shroud (if so equipped).

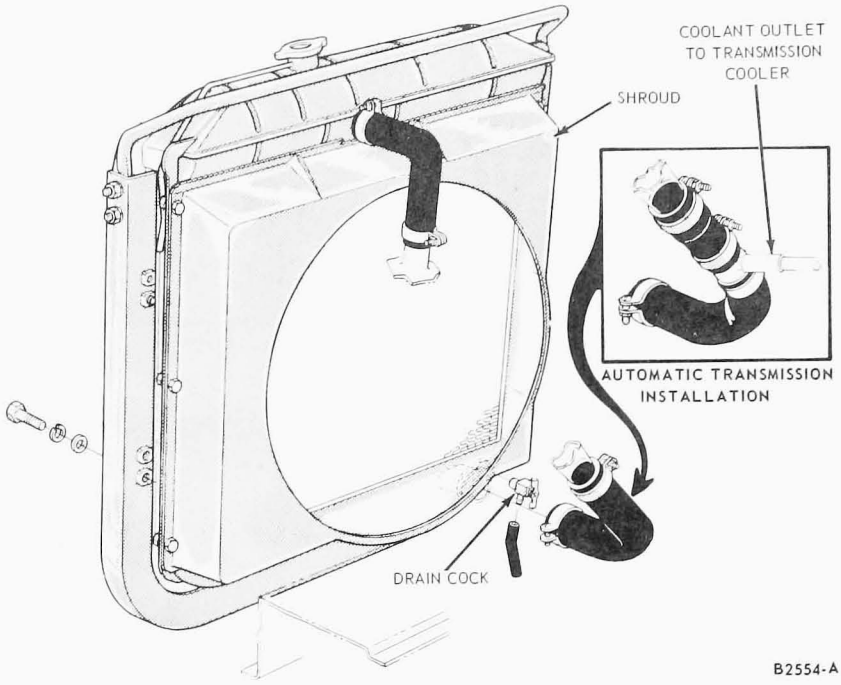

FIG. 4 Radiator and Related Parts—P-Series—Typical

Installation

1. If a new radiator is to be installed, transfer the hoses, draincock, fan shroud, and coolant recovery reservoir (if so equipped) to the new radiator. **Apply water-resistant sealer to the thread of the draincock.**
2. Position the radiator (and shroud) in the chassis and install the retaining bolts. Connect the radiator hoses to the coolant outlet elbow and water pump.

If equipped with an automatic transmission, connect the oil cooler coolant-line to the radiator lower tank.

3. If equipped with a fan shroud, install the water pump pulley, spacer, cooling fan and fan belt. Adjust the drive belt tension to specifications.
4. Fill and bleed the cooling system.

On 6-cylinder engines equipped with a coolant recovery system (Fig. 4), fill the radiator, through the filler cap opening of the radiator upper tank, completely full. The cap may be removed by turning to the stop and, pressing down on the cap, force the cap past the **stop** tangs on the filler neck. Engine should be running at idle speed to circulate the coolant and eliminate any trapped air in the system. Install the radiator cap. Fill coolant reservoir with one quart of coolant. Operate vehicle until normal engine temperature is evident. Check coolant reservoir to see if coolant level is noted at the **Engine Hot** level. If necessary, add coolant to bring to this level. Operate the engine until it reaches normal operating temperature; check the coolant level and the system for leaks.

B-F-500-600 SERIES (WITH 240, 300 6-CYLINDER ENGINES)

Removal

The B-and F-Series radiator installation is shown in Figure 6.

1. Drain the cooling system. Disconnect the radiator upper hose at the coolant outlet elbow and the radiator lower hose at the water pump.
2. Loosen the generator or alternator adjusting arm bolts and loosen the fan belt. Remove the cooling fan retaining bolts, and remove the fan, spacer, water pump pulley and fan belt.
3. Remove the radiator retaining bolts, and remove the radiator and fan shroud.

Installation

1. If a new radiator is to be installed, transfer the hoses, drain cock and fan shroud to the new radiator. **Apply water-resistant sealer to the threads of the draincock.**
2. Position the radiator and shroud in the chassis and install the retaining bolts. Connect the radiator hoses to the coolant outlet elbow and water pump.
3. Install the water pump pulley, spacer, cooling fan and fan belt. Adjust the drive belt tension to specifications.

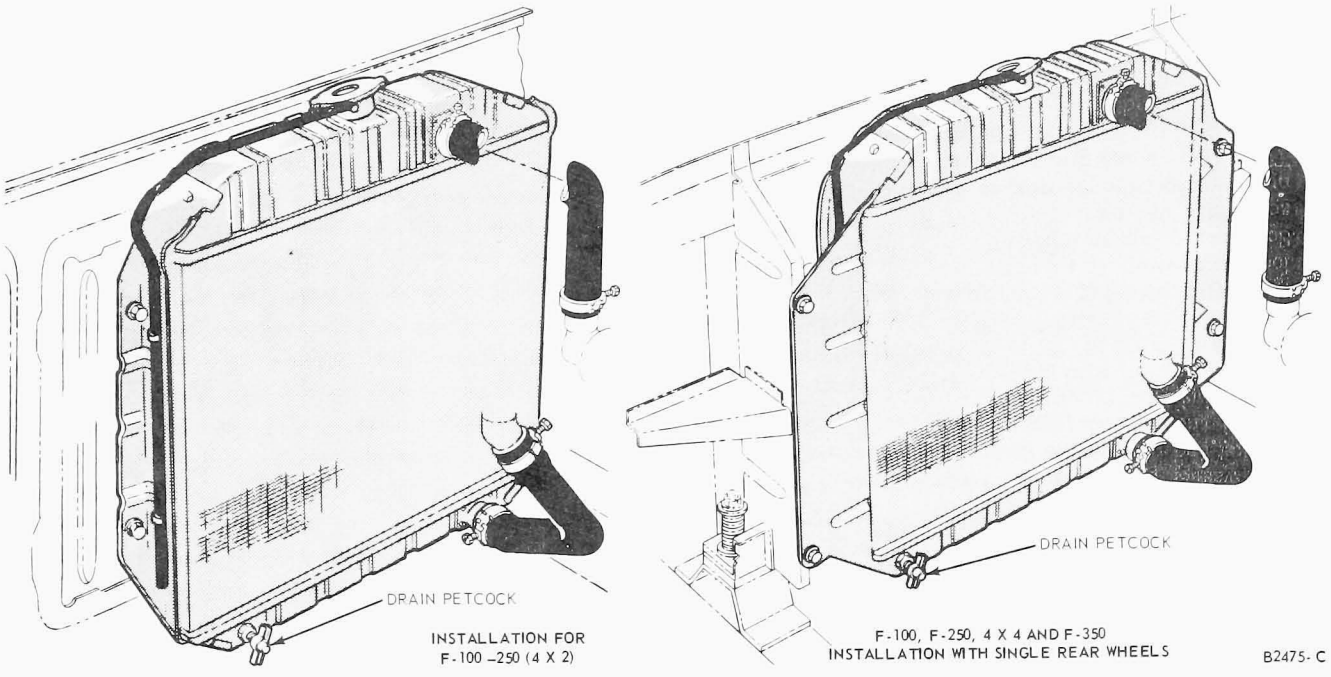

FIG. 5 Radiator Installation—F-100-350 Series—Typical

4. Fill and bleed the cooling system. Operate the engine until it reaches normal operating temperature; check the coolant level and check the system for leaks.

C-500-600 SERIES (WITH 240, 300 6-CYLINDER ENGINES)

Removal

The C-500-600 radiator installation is shown in Figure 7.

1. Drain the cooling system. Disconnect the upper radiator hose from the radiator. Remove the bolt securing the radiator lower hose tube extension to the frame. Disconnect the tube extension from the lower radiator hose.
2. Disconnect the radiator vent line at the radiator. Remove the cooling fan retaining bolts and remove the fan assembly. Remove the bolts securing the radiator brace to the frame.
3. Remove the radiator retaining bolts and remove the radiator, fan shroud and hose as an assembly.

Installation

1. If a new radiator is to be installed, transfer the radiator lower hose, draincock, fan shroud, struts, and vent line fittings to the new radiator. **Apply water-resistant sealer to the threads of the draincock.** Position the radiator assembly in the chassis and install the retaining bolts. Position the struts to the frame and install the retaining bolts.
2. Install the cooling fan assembly and adjust the belt tension to specifications. Connect the radiator vent line to the radiator. Connect the lower radiator hose to the tube extension and secure the tube extension to the frame. Connect the upper radiator hose to the radiator.
3. Fill and bleed the cooling system. Operate the engine until it reaches normal operating temperature; check the coolant level and check the system for leaks.

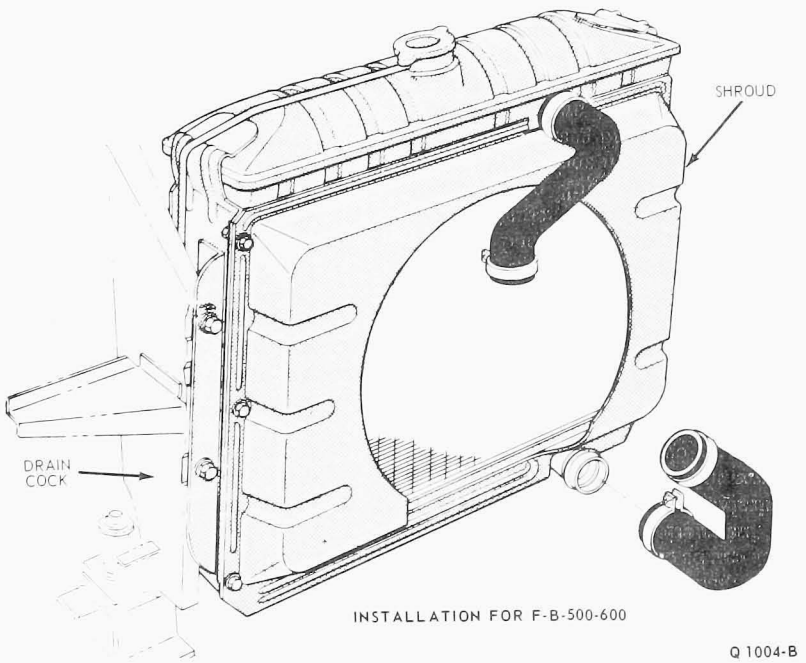

FIG. 6 Radiator Installation—B-F-500-600 Series—Typical

F-100-350 SERIES (WITH 302, 360, 390 8-CYLINDER GAS ENGINES)

Removal

The F-100-350 Series Radiator installations are typical of those shown in Figure 5.

1. Drain the cooling system. Disconnect the upper and lower radiator hoses at the radiator.

On a truck with an automatic

transmission, disconnect the transmission oil cooler line at the radiator.

2. If equipped with a fan shroud, loosen the alternator adjusting arm bolts and loosen the fan belt. Remove the cooling fan retaining bolts and remove the fan assembly.
3. Remove the radiator retaining bolts and remove the radiator and fan shroud, if so equipped.

Installation

1. If a new radiator is to be installed, transfer all the fittings and fan shroud (if so equipped) to the new radiator. **Apply water-resistant sealer to the threads of the draincock.**
2. Position the radiator (and shroud) in the chassis and install the retaining bolts. Connect the radiator upper and lower hoses to the radiator.

If equipped with an automatic transmission, connect the oil cooler line to the radiator.

3. If equipped with a fan shroud, install the cooling fan assembly and adjust the fan belt to specifications.
4. Fill and bleed the cooling system. Operate the engine until it reaches normal operating temperature; check the coolant level and check the system for leaks.

B-F-500-750 SERIES (WITH 330, 361, 391 8-CYLINDER GAS ENGINES)

Removal

The B-and F-Series radiator installation is typical of that shown in Fig. 6.

1. Drain the cooling system. Disconnect the upper and lower radiator hoses at the radiator.

On a truck with a Transmatic transmission, disconnect the oil cooler lines at the radiator.

On a truck with an air compressor, remove the compressor belt.

2. Loosen the alternator adjusting bracket bolts. Remove the fan assembly retaining bolts and remove the fan, spacer, pulley, and fan belt.
3. Remove the radiator retaining bolts and remove the radiator and shroud.

Installation

1. If a new radiator is to be installed, transfer the drain cock and fan shroud to the new radiator. **Apply water-resistant sealer to the threads of the draincock.**
2. Position the radiator and shroud in the chassis and install the retaining bolts. Connect the radiator hoses. Install the fan, spacer, pulley and fan belt. Adjust the drive belt tension to specifications.

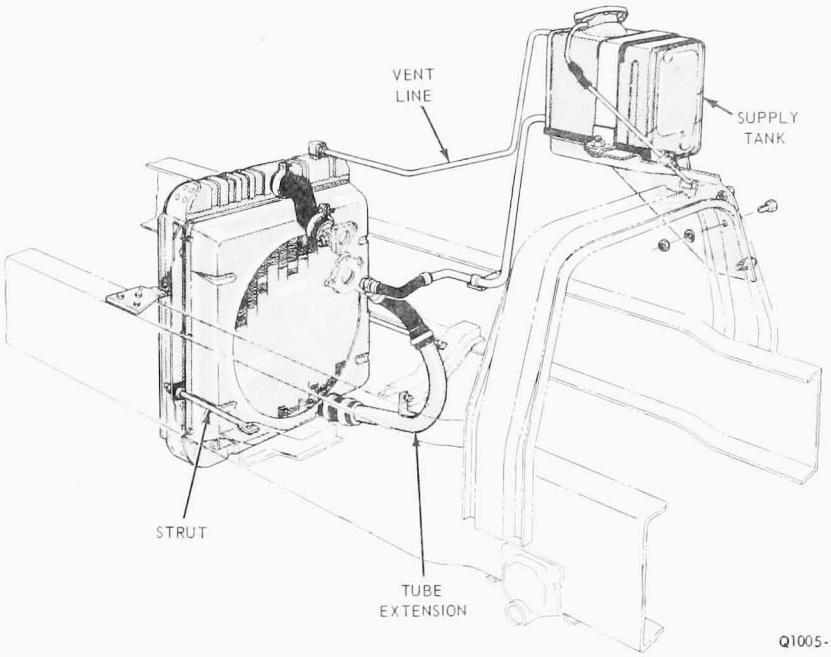

FIG. 7 Radiator Installation—C-500-600 Series—Typical

On a truck with a Transmatic transmission, connect the oil cooler lines.

On a truck with an air compressor, install the air compressor belt and adjust the belt tension to specification.

3. Fill and bleed the cooling system. Operate the engine until it reaches normal operating temperatures and check the coolant level. Check for leaks.

On a truck with a Transmatic transmission, check the Transmatic transmission oil cooler lines for leakage. Check the fluid level.

C-500-800 SERIES (WITH 330, 361, 391 8-CYLINDER GAS ENGINES)

Removal

The C-500-800 Series radiator installation is typical of that shown in Figure 7.

1. Drain the cooling system. Disconnect the upper and lower radiator hoses at the radiator. Disconnect the radiator vent line at the radiator.

On a truck with a Transmatic transmission, disconnect the transmission oil cooler inlet and outlet lines and clamps from the radiator.

On a truck with an air compressor, remove the compressor belt.

2. Remove the tachometer cable clamps from the left side of the radiator. Disconnect the accelerator rod assembly at the cross-shaft and carburetor and remove the rod.
3. Disconnect the supply tank hose clamps from the fan shroud, if so equipped.
4. Remove the bolts securing the fan shroud to the radiator and lay the shroud over the fan. Remove the fan assembly from the crankshaft damper and remove the fan and shroud. Remove the radiator retaining bolts and insulators from top brackets and nuts and insulators from bottom support rods. Remove the radiator.

Installation

1. If a new radiator is to be installed, transfer all fittings to the new radiator. **Apply water-resistant sealer to the threads of the draincock.**
2. Position the radiator in the chassis and install the retaining insulators, nuts and bolts. Place the fan shroud and fan assembly in the chassis and install the fan assembly to the crankshaft damper. Install the fan belt and adjust the belt tension to specifications. Position the fan shroud to the radiator and install the retaining bolts.
3. Connect the upper and lower radiator hoses. Connect the radiator vent line at the radiator. Connect the accelerator rod assembly to the carburetor and cross-shaft. Position

the tachometer cable to the radiator and install the retaining clamps.

On a truck with a Transmatic transmission, connect the transmission oil cooler lines.

On a truck with an air compressor, install the compressor belt and adjust the belt tension to specifications.

4. Position the supply tank hose to the shroud and install the hose clamps, if so equipped.
5. Fill and bleed the cooling system. Operate the engine until it reaches normal operating temperature and check the coolant level. Check for leaks.

On a truck with a Transmatic transmission, check the oil cooler lines for leakage. Check the fluid level.

C-SERIES (WITH 401, 477, 534 8 CYLINDER GAS ENGINES)

Removal

The C-Series radiator installation is typical of that shown in Figure 7.

1. Drain the cooling system. Remove the fan and lower it into the shroud.
2. Remove the heater hose to radiator bracket retaining bolt and remove the bracket and hose from the right side of the radiator.
3. Remove the controls and brackets from the radiator.
4. Remove the draincock.
5. Disconnect the shutterstat to air cylinder line at the top of the radiator. Disconnect the shutter assembly from the radiator and remove the shutter, air cylinder, and air line as an assembly.
6. Remove the radiator left support strap bolt and nut at the radiator and loosen the nut and bolt at the frame and move the support strap out of the way.
7. Remove the radiator right support strap bolt and nut at the frame and loosen the bolt at the radiator and move the strap out of the way.
8. Remove the radiator mounting bolts and remove the radiator, hoses, fan, and shroud.

Installation

1. If a new radiator is to be installed, transfer the hoses, draincock and shroud to the new radiator. **Apply water-resistant sealer to the threads of the draincock.**
2. Place the fan in the shroud and position the shroud and radiator assembly in the chassis.
3. Install the shutter assembly. Connect the shutterstat to air cylinder line.
4. Install and tighten the radiator right and left support strap bolts.
5. Install the fan. Install the draincock and the accelerator cable and clamp bracket. Install the heater hose bracket and position the heater hose in the bracket. Connect the radiator hoses.
6. Fill and bleed the cooling system. Operate the engine until it reaches normal operating temperature and check the coolant level. Check for leaks.

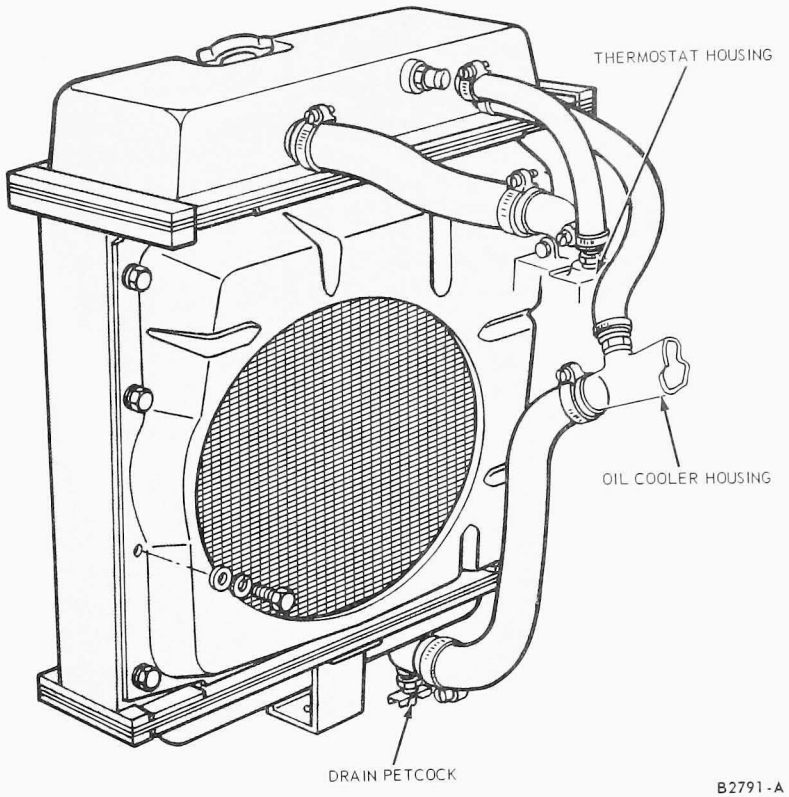

FIG. 8 Radiator Installation—W-Series—Typical

W-SERIES (WITH CUMMINS NH DIESEL ENGINES)

Removal

The W-Series radiator installation is shown in Figure 8.

1. Drain the radiator.
2. Disconnect the radiator hoses.
3. Remove the fan and fan spacer.
4. Remove the bolt, nut, washers and lower insulator from the left and right radiator supports. Remove the nut and washer from the lower radiator support bracket at the frame crossmember.
5. Remove two bolts from the upper header tank. Using two longer bolts, connect a chain to the upper header tank and lift the radiator assembly out with a chain fall. Remove the insulators from the three radiator supports.

Installation

1. If a new radiator is being installed, transfer the radiator shroud, lower support bracket, shutter assembly and drain petcock to the new radiator. Apply water-resistant sealer to the threads of the drain petcock.
2. Position the insulator on the frame crossmember to radiator lower support stud. Tape the insulator to the left and the right support. Lower the radiator into place.
3. Place the large washer and the insulator on the left support bolt and place the bolt through the support and the radiator bracket. Install the washer and nut. Torque the nut to specifications. Follow the same procedure for the right support.
4. Install the lower radiator support retaining washer and nut and tighten the nut until the insulator is compressed to a thickness of 1/4 inch.
5. Install the fan and spacer.
6. Remove the bolts and chain used for removal and install the header tank bolts.
7. Connect the radiator hoses.
8. Fill and bleed the cooling system.
9. Start the engine and check for coolant leaks.

W-SERIES (WITH CUMMINS NTC AND DETROIT DIESEL ENGINES)

Removal

The W-Series radiator installation is shown in Fig. 8.

1. Drain the radiator.
2. Disconnect the radiator hoses.
3. Remove the fan and fan spacer.
4. Remove the bolt, nut, washers and lower insulator from the left and right radiator supports. Remove the nut and washer from the lower radiator support bracket at the frame crossmember.
5. Remove two bolts from the upper header tank. Using two longer bolts, connect a chain to the upper header tank and lift the radiator assembly out with a chain fall. Remove the insulators from the three radiator supports.

Installation

1. If a new radiator is being installed, transfer the radiator shroud, lower support bracket, shutter assembly and drain petcock to the new radiator. **Apply water-resistant sealer to the threads of the drain petcock.**
2. Position the insulator on the frame crossmember to radiator lower support stud. Tape the insulator to the left and right support. Lower the radiator into place.
3. Place the large washer and the insulator on the left support bolt and place the bolt through the support and the radiator bracket. Install the washer and nut. Torque the nut to specifications. Follow the same procedure for the right support.
4. Install the lower radiator support retaining washer and nut and tighten the nut until the insulator is compressed to a thickness of 1/4 inch.
5. Install the fan and spacer.
6. Remove the bolts and chain used for removal and install the header tank bolts.
7. Connect the radiator hoses.
8. Fill and bleed the cooling system.
9. Start the engine and check for coolant leaks.

F-B-SERIES (WITH FORD 8-CYLINDER DIESEL ENGINES)

Removal

The F-and B-Series radiator installation is shown in Figure 9.

1. Drain the cooling system.
2. Disconnect the upper radiator hoses at the radiator.
3. Remove retaining bolts and remove fan.
4. Disconnect the lower radiator hose at the radiator.

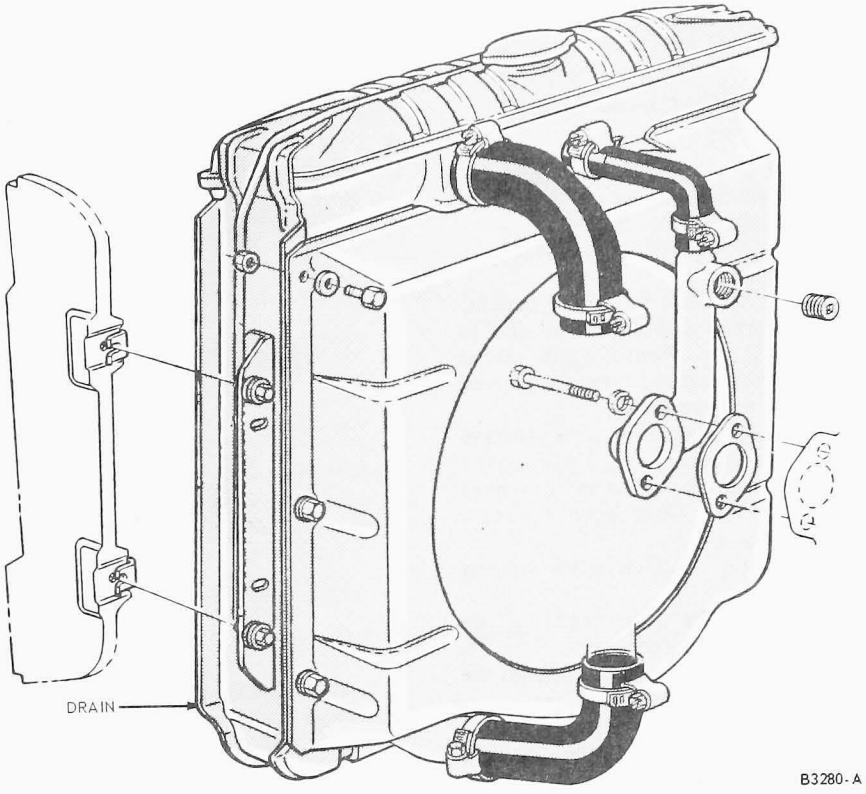

FIG. 9 Radiator Installation—F-B-6000-7000 Series—Typical

5. Remove the bolts securing the radiator to the radiator support and remove the radiator and shroud assembly.
6. Remove the shroud from the radiator.

Installation

1. If a new radiator is to be installed, transfer the drain cock to the new radiator. **Apply water-resistant sealer to the threads of the drain cock.**
2. Install the shroud to the radiator.
3. Position the radiator and shroud to the support and install the retaining bolts.
4. Install the fan.
5. Connect the radiator hoses to the radiator.
6. Fill and bleed the cooling system. Start the engine and check for coolant leaks.

C-SERIES (WITH FORD 8-CYLINDER DIESEL ENGINES)

Removal

The C-Series radiator installation is typical of that shown in Figure 7.

1. Unlock and tilt cab.
2. Drain the cooling system. Disconnect the upper and lower hoses and vent hose at the radiator.
3. Remove bolt and nut retaining accelerator cable bracket to radiator.
4. Remove the cooling fan retaining bolts and remove the fan.
5. Remove nuts, washers and pads retaining the radiator strut to the frame on each side.
6. Remove the two bolts, nuts and pad on each side retaining the radiator support to the frame.
7. Remove the radiator, shroud, supports and braces as an assembly.

Installation

1. If a new radiator is to be installed, transfer the radiator shroud, supports and braces to the new radiator. Transfer the drain cock to the new radiator, **using water-resistant sealer on the threads.**
2. Position the radiator and related parts in the vehicle.
3. Install the radiator support retaining bolts, nuts and pads.
4. Install the radiator strut retaining nuts, washers and pads.
5. Connect the radiator hoses and vent hose.
6. Install the cooling fan and retaining bolts.
7. Install accelerator cable bracket.
8. Fill and bleed the cooling system. Operate the engine until it reaches normal operating temperature;

check the coolant level and check the system for leaks.
9. Lower and lock the cab.

L-SERIES (WITH GAS AND DIESEL ENGINES)

Removal

Radiator installations are typical of those shown in Figs. 10 and 11.

1. Unlock and tilt hood assembly forward.
2. Drain the cooling system. Disconnect all hoses and air lines as necessary. Remove electrical harness clamps and position harness aside, as necessary.
3. Position a support under the front of the hood assembly.
4. Disconnect hood assembly support cables and lower hood assembly onto the support.
5. Disconnect radiator upper support rod.
6. Remove the bolts securing the bottom of the radiator.
7. Using a sling and chain fall, lift the radiator assembly from the truck. Move the radiator forward enough so the shroud clears the fan assembly as the radiator assembly is being removed.
8. Remove the shroud from the radiator.
9. Remove the shutter assembly if so equipped.

Installation

1. If a new radiator is to be installed, transfer the drain cock and all necessary fittings to the new radiator.
2. Install the shroud to the radiator.
3. Install the shutter assembly if so equipped.
4. Using the proper sling and a chain fall, position the radiator assembly in the truck.
5. Install the lower radiator retaining bolts and upper radiator support rod. Disconnect the sling and chain fall. Be sure to use the correct shoulder bolt for thickness of truck frame.
6. Connect all radiator hoses and air lines as necessary to the radiator. Install electrical harness as necessary.
7. Fill and bleed the cooling system. (Refer to Part 27-02). Operate the engine until it reaches normal operating temperatures; check the coolant level and check the system for leaks.
8. Lower and lock the hood assembly into place.

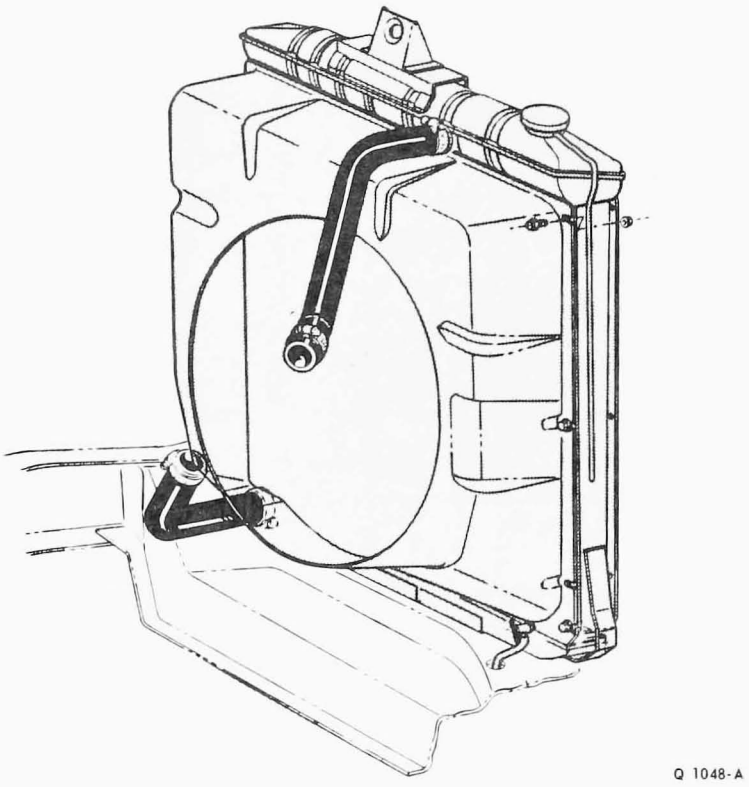

Q 1048-A

FIG. 10 Radiator Installation—L-Series—Typical

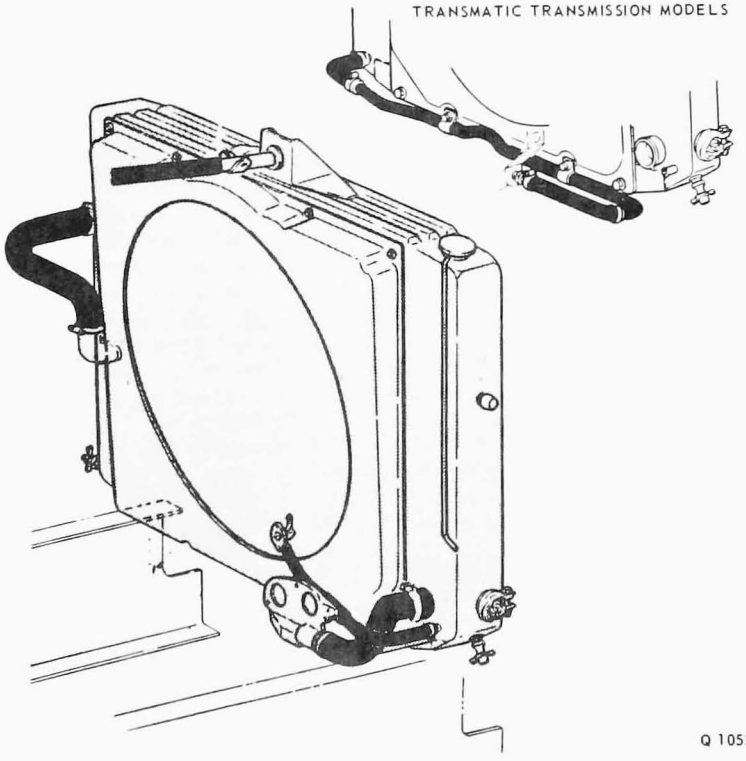

Q 1052-A

FIG. 11 Radiator Installation—L-Series—Typical

RADIATOR SUPPLY TANK

Removal

1. Drain the radiator until the coolant is out of the supply tank. Disconnect the radiator supply tank hose at the supply tank. Disconnect the radiator vent tube at the supply tank, if so equipped.
2. Remove the overflow tube from the supply tank. Remove the supply tank strap or bracket retaining bolt(s) and remove the supply tank.

Installation

1. Position the supply tank in the chassis and install the strap or bracket retaining bolt(s).
2. Connect the radiator hose, overflow tube and vent tube (if so equipped) to the supply tank.
3. Fill and bleed the cooling system. Check for coolant leaks and proper coolant level after the engine reaches normal operating temperatures.

CLEANING AND INSPECTION

COOLING SYSTEM

FORD GASOLINE ENGINES

To remove rust, sludge and other foreign material from the cooling system, use either FoMoCo Regular Cooling System Cleanser or in severe cases use Heavy Duty Cleanser. Removal of such material restores cooling efficiency and avoids overheating.

In severe cases where cleaning solvents will not properly clean the cooling system for efficient operation, it will be necessary to use the pressure flushing method.

Various types of flushing equipment are available. If pressure flushing is used, make sure the cylinder head bolts are properly tightened to prevent possible water leakage into the cylinders.

Always remove the thermostat prior to pressure flushing.

A pulsating or reversed direction of flushing water flow will loosen sediment more quickly than a steady flow in the normal direction of coolant flow.

Do not backflush cooling systems that have a water shut-off valve in the heater system, or damage to the valve can result.

CUMMINS DIESEL ENGINES

To clean the cummins Diesel cooling system, refer to CLEAN COOLING SYSTEM—SPRING AND FALL, in the Cummins Engine Operation and Maintenance Manual.

DETROIT DIESEL ENGINES

To clean the Detroit Diesel cooling system, refer to Cooling System in the applicable Detroit Diesel Highway Maintenance Manual.

FORD V-8 DIESEL ENGINES

Refer to the appropriate Caterpillar Service Manual for instructions on care and cleaning of the cooling systems.

SPECIFICATIONS

TORQUE VALUES

Description	Ft-Lbs
Radiator Clamp to Radiator Support Bronco	5-8
Shutter to Radiator P-Series Diesel	5-8
Radiator to Body Sheet Metal	
All F-Series, Bronco and Econoline except F-350 with A/C and/or E.C. and Bronco W/302 C.I.D. Engines	10-15
F-350 with A/C and/or DR with EC	20-25
Radiator to Frame Crossmember P-Series	20-24
Radiator Hose Clamp	16-24 in-lb
Tie-Bar to Radiator Support P-350-400-500	20-24
Fan Shroud to Radiator	
W-Series 1/4-20	30-45 in-lb
F-, L-, LN-, LT- and LNT-Series Medium and Heavy 1/4-20	50-68 in-lb
Radiator-to-Sidemember-	
C-Series 3/8-16	20-24
7/16-14	33-45
Radiator-to-top-Support	
F-, L-, LN-, LT- and LNT-Series Medium and Heavy 1/2-13	31-42
Water Outlet Housing	
170, 240 and 300 Six	12-15
302 V-8	12-15
330, 360, 361, 390 and 391 V-8	23-28
401, 477 and 534 V-8	23-28
Fan to Fan Hub	
NH-Engines, W-Series Truck	45-50
Radiator Brace Rods	
L-, LN-, LT- and LNT-Series Trucks	30-35

Description	Ft-Lbs
Radiator Support to Frame Insulator Bolts	30-35
Fan to Water Pump-All F-Series (Except F-350 DR)	12-18
Econoline, Bronco and Parcel Delivery (Gas Only)	10-14
Fan to Fan Spacer - P-Series Diesel and F-350 (DR)	8-12
Radiator to Radiator Support - P-Series (Gas)	20-30
Shroud to Radiator - F-100 through 350 and P-Series	5-8
Shroud to Radiator - Bronco	1-2
Radiator-to-Body Side Supports -	
F, B and LN-Series Medium 3/8-16	20-24
Radiator Hose Clamp	16-22 in-lb
Water By-Pass Connector to Engine Front Cover	
F and B-6000-7000 C-6000-8000 F and T-8000	13-23
Shutter to Radiator	
W-Series 1/4-20	30-45 in-lb
F-, L-, LN-, LT-, LNT-Series Medium and Heavy 5/16-18 and 5/16-24	8-12
C-Series 1/4-20	50-68 in-lb
Water Filter Hose Clip-to-Air Inlet Housing	
3/8-16	20-25
Water Filter Hose Clip-to-Engine Idler Gear Cover	
3/8-16	29-36
Water Filter Ground Wire to Engine	
3/8-16	29-36
EC-EXTRA COOLING DR-DUAL WHEELS	

DRIVE BELT TENSION

Belt Width	Minimum Tension (for use at maintenance interval only) (Hot Engine)	Installation Tension	
		Used Belt ①	New Belt
1/4"	30 lbs.	60 lbs.	80 lbs.
3/8" and 15/32"	50 lbs.	110 lbs.	140 lbs.
1/2"	50 lbs.	110 lbs.	140 lbs.

① Any belt that has operated for ten minutes or more is considered a used belt.

CQ1084-B

PART 27-07 Radiator Automatic Shutter

This Information Applies To: All Models

COMPONENT INDEX	Page
AIR CYLINDER	
Assembly	07-07
Disassembly	07-07
Installation	07-05
Operation	07-01
Removal	07-05
AUTOMATIC SHUTTER TEST	
Air Cylinder Test	07-02
Thermostatically Controlled Shutters	07-02
DESCRIPTION AND OPERATION	
Air Operated System	07-01
Thermostat Operated System	07-01
Vacuum Operated System	07-01
AUTOMATIC SHUTTER ADJUSTMENT	
Air Operated Shutter C-Series	07-02
Thermostatically Operated Shutter	07-02
L- LT- LN	07-02
LN 6000-7000	07-02
800-9000	07-02
P-Series	07-02
SHUTTER ASSEMBLY REMOVAL AND INSTALLATION	
C-Series Gas Engines	07-06
L-Series All Engines	07-06
W-Series All Engines	07-06
SHUTTERSTAT	
Installation	07-06
Removal	07-05
VACUUM CYLINDER	
Installation	07-05
Operation	07-01
Removal	07-05
SPECIFICATIONS	
Torque Values	04-15

DESCRIPTION AND OPERATION

The automatic shutter controls engine temperature by regulating air flow through the radiator. It provides faster engine warm-up and less variation in operating temperature.

There are three methods of operating the shutters, a thermostatically operated system, an air operated system and a vacuum operated system. The thermostatically controlled system is used on P-5000, W and L-Series trucks. The air operated system is used on other trucks with air brakes. A vacuum operated system is used on other trucks with vacuumboosted hydraulic brakes.

THERMOSTAT OPERATED SYSTEM

The thermostat operated system consists of a shutter control assembly, a shutter control rod or a shutter control cable and a shutter assembly. The shutter control assembly has a power element which works much like a thermostat. When the coolant temperature is below operating temperature, the shutters are closed because of the spring tension at the end of the control rod or cable. As the coolant reaches operating temperature, the power element expands and opens the shutters by working against the spring tension.

AIR OPERATED SYSTEM

The air operated shutter system consists of the shutter assembly, an air cylinder which operates the shutter, and a thermostatically controlled air valve called a shutterstat. With no air pressure on the system, springs in the shutter assembly will hold the shutter blades in the open position. With normal air pressure and the engine below operating temperature, the shutter blades close. As the engine coolant heats to the operating temperature setting of the shutterstat, an air valve in the shutterstat closes, cutting off air to the air cylinder. The air in the air cylinder is then exhausted through the shutterstat and the shutter assembly springs open the shutter blades. Always release the air from the brake system before removing a shutter air line.

VACUUM OPERATED SYSTEM

The vacuum operated shutter system consists of the shutter assembly, a vacuum power cylinder which operates the shutter, and thermostatically controlled vacuum valve called a shutterstat. Operation of this system is the same as for air with the exception that vacuum power is the operating medium.

TESTING

AUTOMATIC SHUTTER TEST

On trucks so equipped, the radiator automatic shutter thermostat maintains coolant temperature above the engine thermostat setting, opening or closing the shutter as necessary to maintain engine temperature at a pre-determined setting. The W-and L-Series trucks and the P-5000-Series trucks use a shutter that directly is operated by a thermostat linked to the shutter. On some trucks with air brakes, an air cylinder actuates the shutters. On other trucks with vacuum brakes, a vacuum cylinder

actuates the shutters. Control of the air or vacuum cylinder is maintained by a shutterstat, which is a thermostatically controlled valve. To determine the cause of automatic shutter malfunction, the air or vacuum cylinder and shutterstat or the thermostat power element and linkage can be tested separately.

AIR CYLINDER TEST

1. To test air cylinder operation, release all air pressure from the brake system and disconnect the air line at the air cylinder. Springs in the shutter assembly should completely open the shutters.
2. If shutters remain closed, the cause may be either the air cylinder is not working, cylinder linkage is maladjusted, the shutters are binding, or shutter spring is broken.
3. Apply 90 psi air pressure to the air cylinder. The shutters should close completely, providing the linkage is adjusted correctly and the shutters are not binding. Check the air cylinder for leaks. Replace or repair the air cylinder if leaking, or the shutters are not completely closed.

VACUUM CYLINDER TEST

1. To test vacuum cylinder operation, disconnect the vacuum line to the vacuum cylinder. Springs in the shutter assembly should completely open the shutters.
2. If shutters remain closed, the cause may be either the vacuum cylinder is damaged, cylinder linkage is maladjusted, or the shutters are binding.
3. Connect a temporary line from the truck vacuum system to the vacuum cylinder. Start the engine. Shutters should close completely when vacuum reaches normal level, providing the linkage is adjusted correctly and the shutters are not binding. Check the vacuum cylinder for air leaks. Replace the vacuum cylinder if leaking or if the shutters do not close completely.

THERMOSTATICALLY CONTROLLED SHUTTER TEST (W-L-SERIES)

1. Make sure that the linkage is properly adjusted and free from binding.
2. Check to see if shutters are opening at desired temperature range.

If the shutters are opening at the desired temperature range, but the engine is overheating, the problem may be the engine thermostat, fan belt, water pump or a clogged cooling system.

If the shutters are not opening at the desired temperature range, remove the control assembly and measure the distance from the gasket surface to the end of the power element. The distance should be 2-15/16 inches. If not, adjust it until the proper distance is obtained. If it is properly adjusted, check the number stamped on the end of the power element. Number 383 will open at 170 degrees, Number 137 at 175 degrees and Number 380 at 180 degrees.

ADJUSTMENTS

RADIATOR AUTOMATIC SHUTTER ADJUSTMENT

When operating properly, the radiator automatic shutters will remain fully closed until the engine reaches normal operating temperature. An adjustable feature is provided in the shutter linkage of some models to set the shutters at the fully closed position.

AIR OPERATED SHUTTER—C-SERIES

1. Apply air pressure (approximately 90 psi) to the air cylinder for the full stroke of the piston to close the shutter blades.
2. Loosen and back-off nut B (Fig. 1).
3. Adjust nut A (Fig. 1) to provide a slight pressure of the rubber vane seals on the shutter blades.
4. Tighten nut B.

VACUUM-OPERATED SHUTTER—C-750-800

1. Apply normal vacuum to the vacuum cylinder to close the shutter blades.
2. Check for a slight pressure contact of the rubber vane seals on the shutter blades.
3. If adjustment is required, loosen nut B (Fig. 1) and remove nut A from pin.
4. Screw nut A (Fig. 1) in or out to increase or decrease the closed pressure contact of the rubber vane seals.
5. Replace nut A on pin and apply vacuum to the cylinder. Recheck the blade contact.
6. After the correct adjustment, tighten nut B.

VACUUM-OPERATED SHUTTER—C-SERIES EXCEPT C-750-800

1. Apply vacuum to the vacuum cylinder to close the shutter blades.
2. Loosen and back-off nut B (Fig. 1).
3. Adjust nut A (Fig. 1) to provide a slight pressure of the rubber vane seals on the shutter blade.
4. Tighten nut B.

THERMOSTATICALLY OPERATED SHUTTER—LN-6000-7000

1. When the engine is cold, loosen jam nut B shown in Fig. 1.
2. Turn nut A until slack in the cable is taken up and shutter blades are in the closed position.
3. Tighten jam nut B.

THERMOSTATICALLY OPERATED

1. When the engine is cold, loosen jam nuts B shown in Fig. 1.
2. Turn nut A until slack in linkage is taken up with the shutter blades in the closed position.
3. Back off nut A 1 to 2 turns.
4. Tighten jam nuts B.

VACUUM-OPERATED SHUTTER—F AND B-6000-7000

1. Loosen the jam nut (Fig. 1) and disconnect the swivel nut from the trip lever.
2. Apply vacuum to the vacuum cylinder to move the trip lever to the shutter blade closed position.
3. Move the shutter rod upward to obtain a slight pressure contact of the vane seals on the shutter blades. Then, adjust the swivel nut to match the hole in the trip lever.
4. Connect the swivel nut to the trip lever and tighten the jam nut.

THERMOSTAT OPERATED SHUTTER—P-SERIES

1. When the engine is cold, loosen the nut B shown in Fig. 1.
2. Adjust nut A to obtain a slight pressure contact of the shutter blade rubber vanes.
3. Tighten nut B against nut A, taking care not to let nut A turn.

VERNATHERM THERMOSTATICALLY OPERATED SHUTTER L—W-SERIES

1. With the engine temperature below 150 degrees F, loosen the jam nut on the shutter control rod (Fig. 1).
2. Adjust the turnbuckle on the shutter control rod until the shutter control assembly plunger bottoms.
3. Back off the turnbuckle 1 to 1 1/2 turns. During very cold weather operation, the turnbuckle may be backed off 3-4 turns. If it is backed off 3-4 turns, it will have to be readjusted to 1 to 1 1/2 turns if and when warm weather operation is encountered.
4. Tighten the jam nut.
5. Operate the engine and see if the shutter opens as the engine reaches operating temperature. The full open position of the shutter blades is at an angle of 60 degrees— 70 degrees to the radiator.

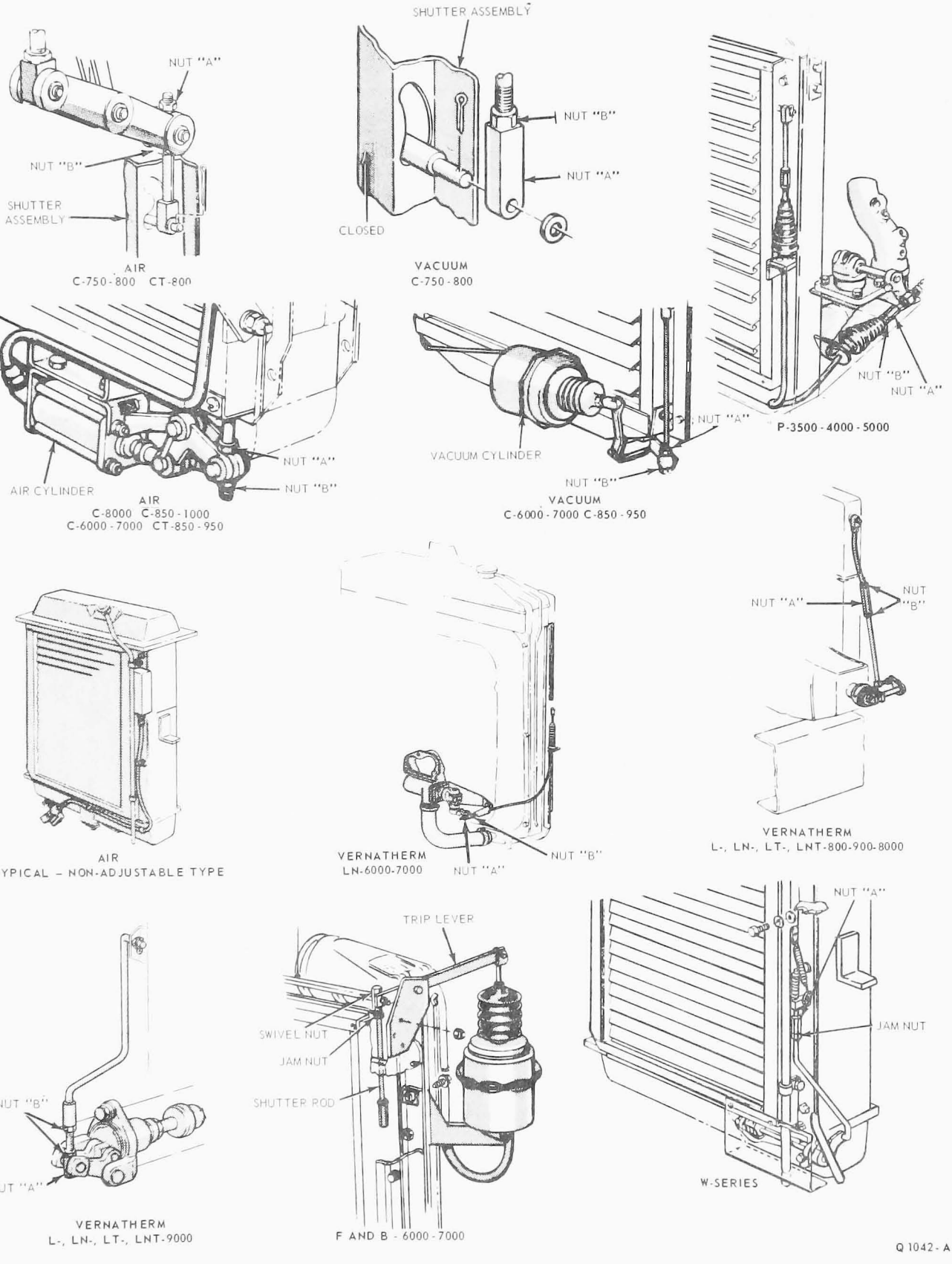

FIG. 1 Automatic Shutter Adjustment Points

REMOVAL AND INSTALLATION

AIR CYLINDER

700-800 SERIES TRUCKS—GASOLINE ENGINES

Removal

The 700-800 Series air cylinder installations are shown in Fig. 2.

1. Shut off the air control valve. Disconnect the air line at the air cylinder.
2. On C-Series trucks, remove the cotter pin, washer and clevis pin connecting the air cylinder rod to the linkage.
3. Remove the air cylinder retaining bolts and remove the air cylinder.

Installation

1. If a new air cylinder is being installed, transfer the nut(s) and air fitting to the new air cylinder.
2. Install the air cylinder and torque the retaining bolts to specifications.
3. On C-Series trucks, connect the air cylinder rod to the linkage with the clevis pin, washer and cotter pin.
4. Connect the air line to the air cylinder and open the air control valve. Adjust the shutter linkage as described in this Part, Adjustments.

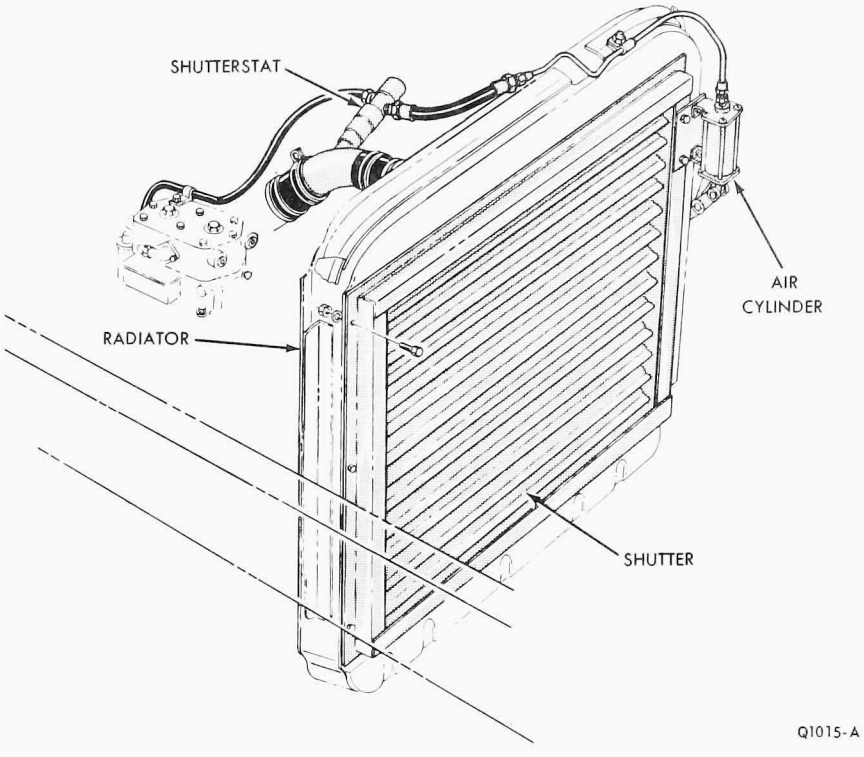

FIG. 2 Typical C-Series Air-Operated Radiator Shutter Assembly—Gas Engine

800-900 SERIES TRUCKS—GASOLINE ENGINES

Removal

The air cylinder installations are shown in Figs. 3 and 4.

1. Shut off the air control valve. Disconnect the air line at the air cylinder.
2. Disconnect the shutter operating bellcrank at the air cylinder.
3. Remove the air cylinder retaining bolts and remove the air cylinder.

Installation

1. If a new air cylinder is to be installed, transfer the air fitting to the new cylinder. Install the air cylinder on the mounting bracket. Position the shutter operating bellcrank on the cylinder and install the retaining nut.
2. Connect the air line to the air cylinder and open the air control valve. Adjust the shutter linkage as described in this Part, Adjustments.

CUMMINS DIESEL AND DETROIT DIESEL ENGINES

Removal

The air cylinder installations are shown in Figs. 2 through 5.

1. On L-, LN-, LT-, LNT-Series trucks, open the hood assembly. On C-Series, tilt the cab.
2. Shut off the air control valve. Disconnect the air line at the air cylinder.
3. Disconnect the shutter operating bellcrank at the air cylinder.
4. Remove the air cylinder retaining bolts and remove the air cylinder from the mounting bracket.

Installation

1. If a new air cylinder is to be installed, transfer the air fitting to the new cylinder.
2. Install the air cylinder on the mounting bracket and torque the retaining bolts to specifications.
3. Connect the air hose. Position the shutter operating bellcrank on the cylinder and install the retaining nut.
4. Open the air control valve. Start the engine and check the shutter operation.
5. Close the hood assembly.

VACUUM CYLINDER

GASOLINE ENGINES

Removal

Vacuum cylinder installations are shown in Figs. 6 and 7.

1. Disconnect the vacuum line at the vacuum cylinder.
2. On C-Series trucks remove the cotter pin, washer and clevis pin and disconnect the vacuum cylinder rod from the shutter linkage.
3. Remove the retaining bolts and lift off the vacuum cylinder.

Installation

1. If a new vacuum cylinder is being installed, transfer the rod nut(s) and vacuum fitting to the new vacuum cylinder.
2. Install the vacuum cylinder and torque the retaining bolts to specifications.
3. On C-Series trucks connect the vacuum cylinder rod to the shutter linkage with clevis pin, washer and cotter pin.
4. Connect the vacuum line to the vacuum cylinder. Adjust the shutter linkage as described in this Part, Adjustments.

SHUTTERSTAT

Whenever changing the shutterstat to a higher or lower temperature range,

the engine thermostat must be changed accordingly to a higher or lower range.

Removal

1. Partially drain the radiator so that the coolant level is below the shutterstat assembly.

   On an air operated system, close the air control valve.
2. Disconnect the air hoses from the shutterstat. Remove the shutterstat.

   Do not attempt to adjust the shutterstat. It should be replaced if it is not operating properly.

Installation

When installing a new shutterstat, be sure the difference in temperature calibration between the engine thermostat and the shutterstat is maintained or the shutters will be ineffective.

1. If a new shutterstat is to be installed, remove the fittings from the old shutterstat. Apply water-resistant sealer on the threads of the fittings and install the fittings in the new shutterstat.
2. Apply water-resistant sealer on the mounting threads of the shutterstat. Install the shutterstat. Connect the air hoses to the shutterstat.
3. Fill the cooling system with coolant and bleed the system.
4. Start the engine and check the shutter operation. Check the system for leaks and correct coolant level.

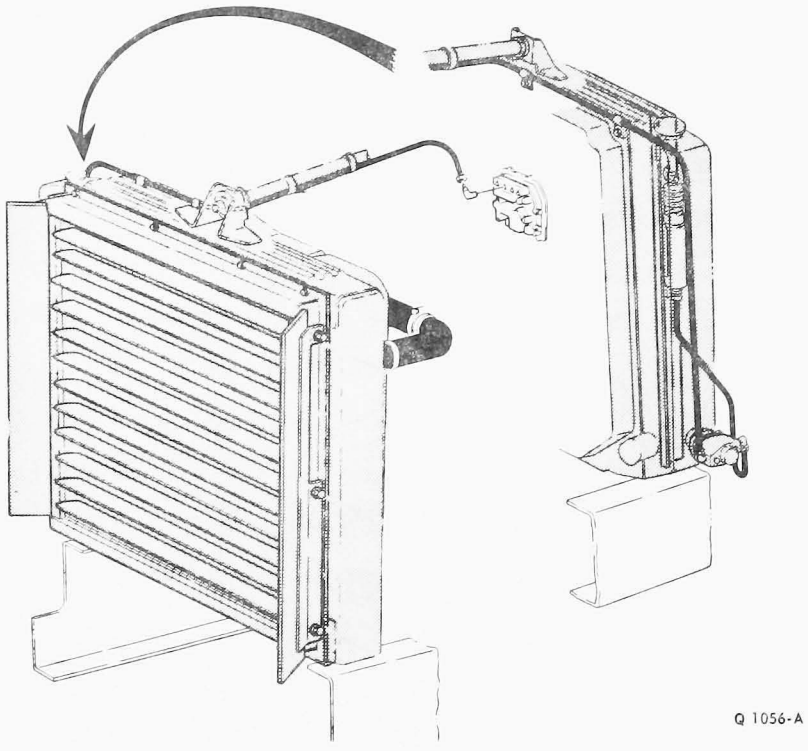

FIG. 3 Typical L-Series Air-Operated Radiator Shutter Assembly—Gas Engines and 6V-53 Diesel

SHUTTER ASSEMBLY

C-SERIES TRUCKS—GASOLINE ENGINES

Removal

Refer to Figures 4, 6 and 7.

1. On an air operated system, close the air control valve. Disconnect the air line at the air cylinder.

   On a vacuum operated system, disconnect the vacuum line at the vacuum cylinder and at the shutterstat.
2. Disconnect the throttle linkage ahead of the radiator and swing to one side. Remove the bolt(s) retaining the air or vacuum line on the radiator and/or shutter assembly.
3. Remove the bolts, nuts and washers retaining the shutter assembly to the radiator.
4. Lift the shutter assembly from the truck.

Installation

1. If the shutter is being replaced, transfer the air or vacuum cylinder, linkage and weatherstrip to the new shutter.
2. Position the shutter assembly on the radiator and install the retaining bolts, nuts and washers. Adjust the radiator shutter linkage as described in this Part, Adjustments.
3. Connect the air or vacuum line. Connect the throttle linkage.
4. On an air operated system, open the air control valve.
5. Start the engine and check the shutter operation. Check the system for leaks.

W-SERIES TRUCKS—ALL ENGINES

Removal

1. Remove the radiator (refer to Part 27-04, Removal and Installation).
2. Remove the cotter pin from the shutter control rod (Fig. 8) and remove the shutter control rod from the shutter control assembly lever.

   Remove the shutter control assembly cover plate.
3. Remove the bolts, nuts and washers from each side of the shutter assembly. Disconnect the overflow hose from the radiator cap housing and remove the shutter assembly.

Installation

1. If the shutter assembly is being replaced, transfer the overflow hose and clamps from the old shutter assembly.
2. Install the shutter assembly on the radiator.
3. Insert the shutter control rod in the shutter control assembly lever and install the cotter pin.
4. Adjust the control rod (refer to Adjustments).
5. Install the shutter control assembly cover plate and connect the overflow hose to the radiator cap housing.
6. Install the radiator (refer to Part 27-04, Removal and Installation).

L-LN-LT-LNT-SERIES—ALL ENGINES

Removal

1. Unlock and tilt hood assembly forward.
2. On air operated system, close the air control valve. Disconnect the air line at the air cylinder.

   On thermo operated system (Figs. 9 through 11), remove cotter pin attaching shutter control linkage to bellcrank. Disconnect shutter control linkage from bellcrank. Remove linkage attaching screw as necessary.
3. Remove the bolts retaining the shutter assembly to the radiator.
4. Lift the shutter assembly from the truck.

Installation

1. Position the shutter assembly in front of the radiator and install

attaching bolts.
2. On air operated system, connect the air line and open air control valve.

On thermo operated system, connect the air line and open air control valve.
3. Adjust the shutter assembly as described in Adjustments, as necessary.
4. Close and lock hood assembly.

MAJOR REPAIR OPERATIONS

AIR CYLINDER

Some air operated shutter installations are equipped with air cylinders that are replaced as a unit. Other installations have air cylinders which can be disassembled and repaired. The instructions below apply to the repairable type air cylinder.

Disassembly

The air cylinder assembly is shown in Fig. 12.

1. Remove the air cylinder. Remove the four long bolts and the nuts retaining the air cylinder ends to the cylinder (Fig. 12). Slide off the air inlet end and the cylinder housing.
2. Loosen the lock nut at the actuating arm end of the piston and unscrew the piston from the actuating arm. Remove the lock nut, piston assembly, return spring, spring seat washer, felt, and gasket.
3. Remove the nut and lock washer from the piston cup retainer. Remove the cup retainer, cup, and lift off the seal.
4. Remove the two screws and lock washers retaining the dust cap retainer. Remove the dust cap, felt, and washer.

Assembly

1. Install the dust cap washer, new felt, dust cap, dust cap retainer and the screws and lock washers. Do not tighten the retaining screws at this time.
2. Install a new gasket, felt, and spring seat washer on the actuating arm bracket end plate.
3. Install the return spring on the piston, insert the piston assembly through the actuating arm end plate, and install the lock nut.
4. Install the seal in the piston groove, the piston cup, cup retainer, and lock washer and nut.
5. Screw the piston assembly into the actuating arm and tighten the lock nut.
6. Tighten the dust cap retaining screws.
7. Coat the cylinder and piston cup with a high temperature grease (Litholene multipurpose grease or the equivalent). Install the cylinder housing. Install the O-ring on the air inlet and plate and place the plate on the cylinder housing.
8. Install the four bolts, position the mounting bracket on the bolts, and install the lock washers and nuts.

SHUTTER ASSEMBLY

Disassembly

1. On C-Series Trucks, disconnect the linkage from the shutter pin and remove the air or vacuum cylinder and linkage.
2. Place the assembly on a work bench and remove the bolts and washers retaining the shutter blades to the housing.
3. Remove the shutter blade assembly from the housing.
4. Remove the shutter blade return springs.
5. Remove the retaining wires from the end brackets. Remove the E clips from the blade actuating bracket. Remove the brackets from the shutter blades.

Assembly

1. If the oilite bearings are damaged either replace or rebush the bearings. Repair or replace damaged shutter blades.
2. Install the washers on the shutter blades. Install the brackets, retaining wires, and E clips on the shutter blades.
3. Position the shutter blade assembly on the housing with the actuating arm rod through the shutter housing and into the cylinder arm.
4. Install the blade retaining screws and washers.
5. On the C-Series truck, install the air or vacuum cylinder and connect the linkage.

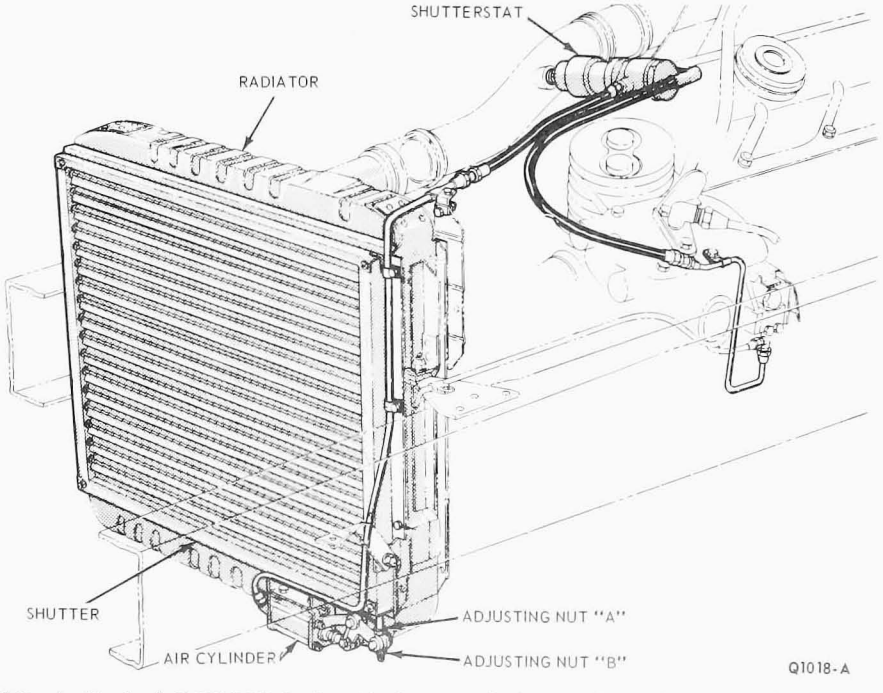

FIG. 4 Typical C-CT-900 Series Air-Operated Shutter Assembly—Gas Engine

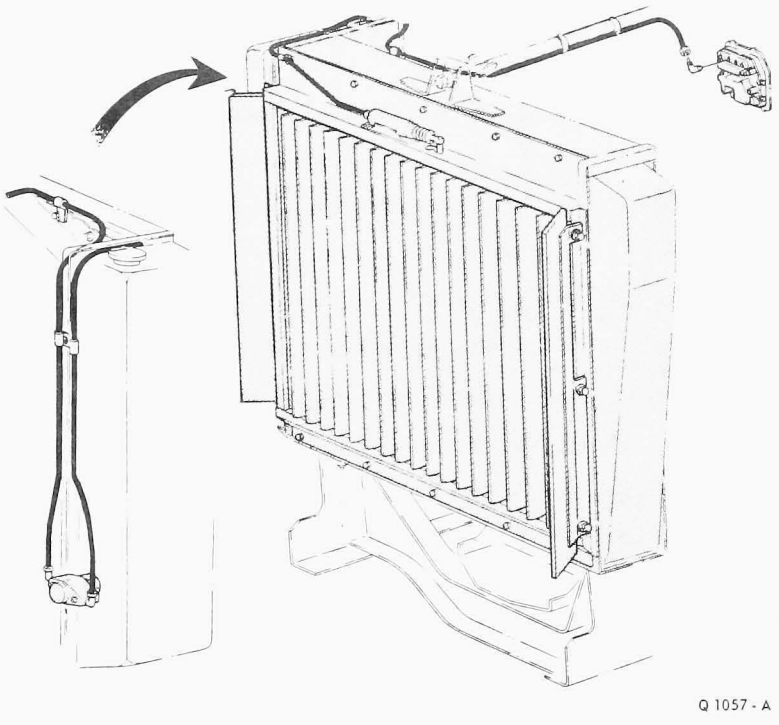

FIG. 5 Typical L-9000 Series Air-Operated Shutter—NH 8-71, 6-71 Diesel Engines

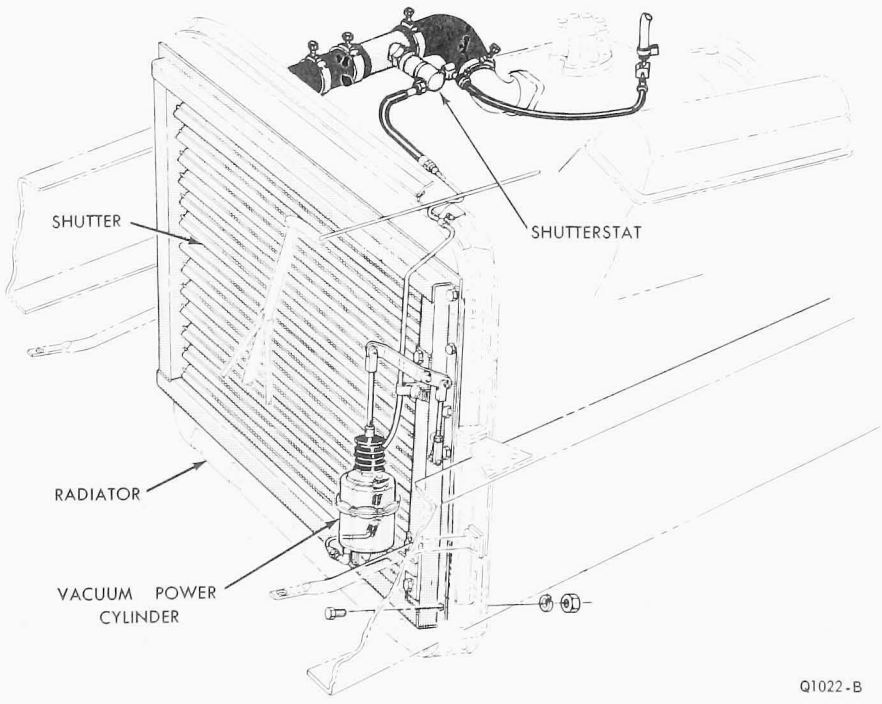

FIG. 6 Typical C-750-800 Vacuum-Operated Radiator Shutter Assembly—Gas Engine

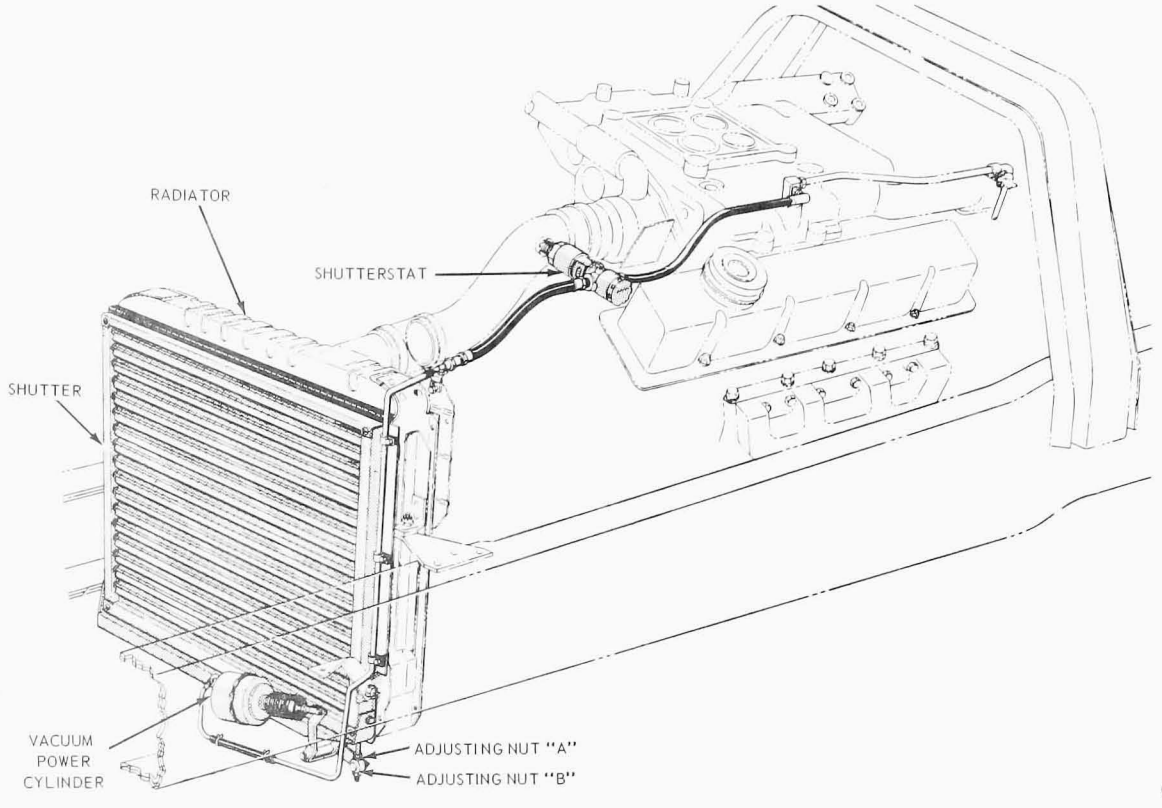

FIG. 7 Typical C-850-900 Vacuum-Operated Shutter Assembly—Gas Engine

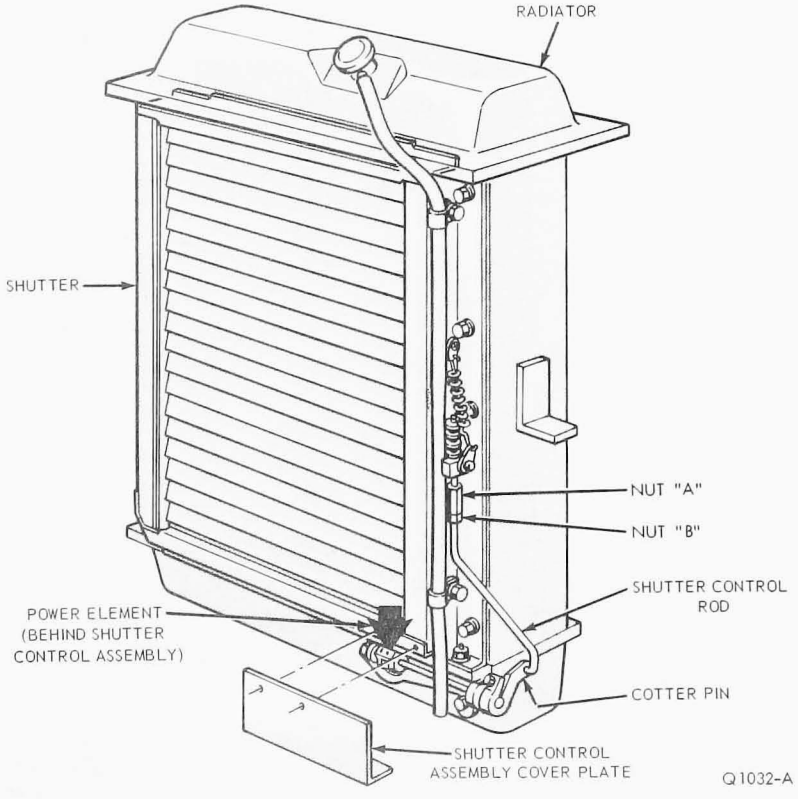

FIG. 8 W-Series—Vernatherm Thermostat-Operated Shutter Assembly

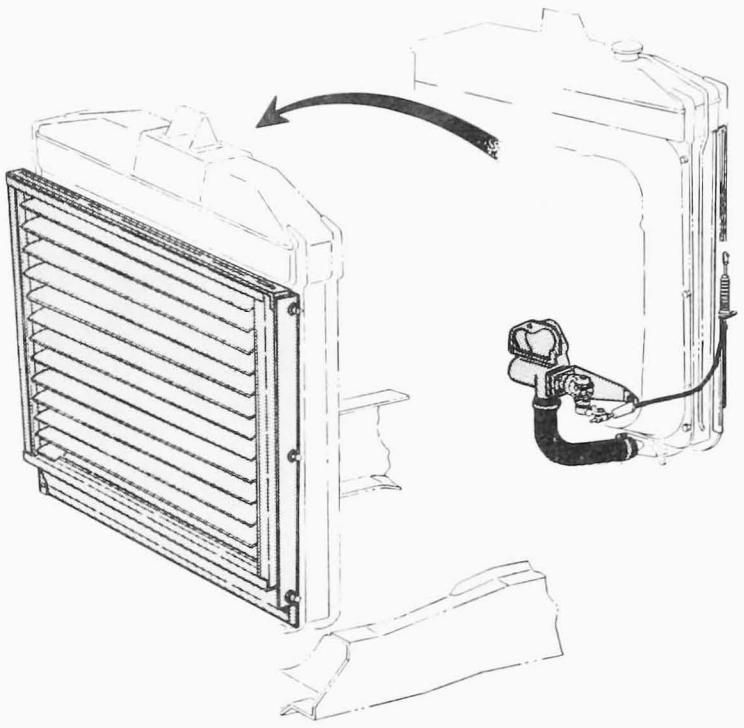

Q 1058 - A

FIG. 9 Typical LN-6000-7000 Thermostat-Operated Shutter Assembly

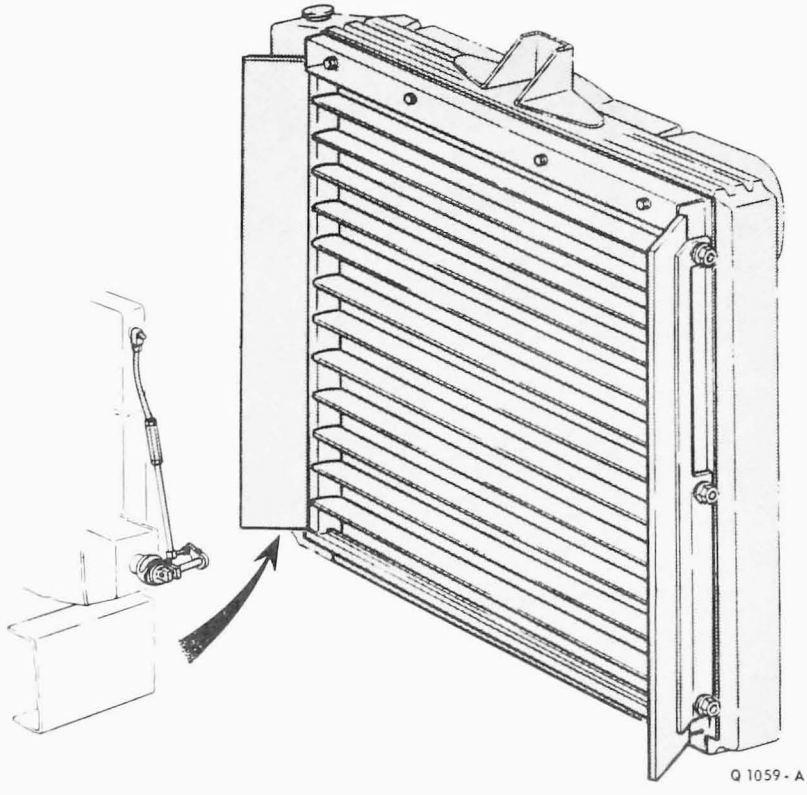

Q 1059 - A

FIG. 10 Typical L-800-8000 Series Thermostat-Operated Shutter Assembly

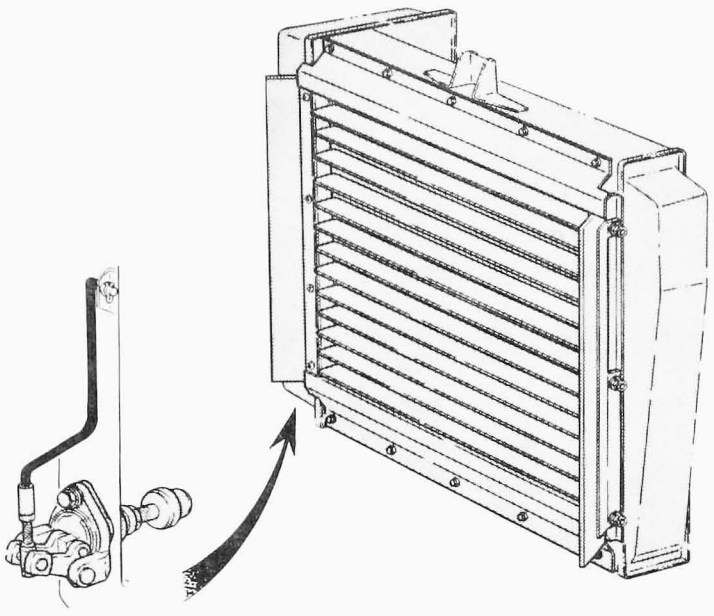

Q 1060 - A

FIG. 11 Typical L-9000 Series Thermostat-Operated Shutter Assembly

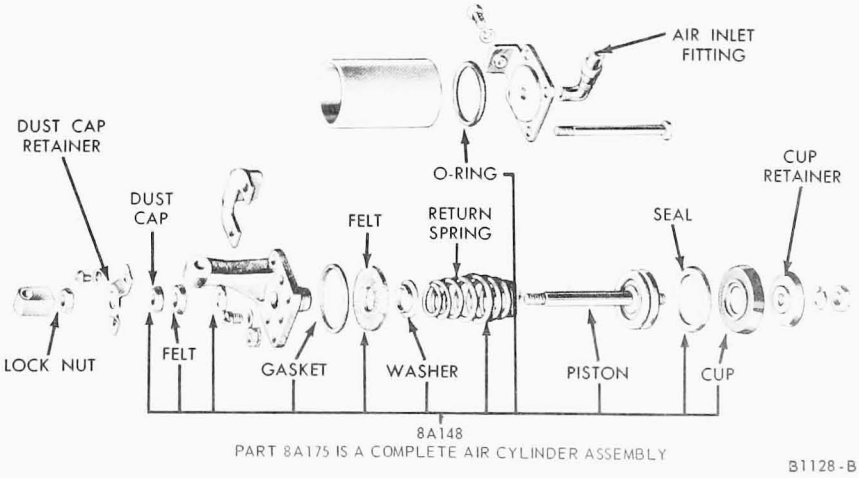

FIG. 12 Air Cylinder Assembly

Starting System

GROUP 28

	Page
PART 28-01	
Starting System General Service	28-01-01
PART 28-02	
Positive Engagement Starter	28-02-01
PART 28-10	
Delco Remy Starter	28-10-01
PART 28-11	
Prestolite Starter	28-11-01

PART 28-01 Starting System General Service

GENERAL INFORMATION

The function of the starting system is to crank the engine at a speed fast enough to permit the engine to start. Heavy cables, connectors, and switches are used in the starting system because of the large current required by the starter while it is cranking the engine. The amount of resistance in the starting circuit must be kept to an absolute minimum to provide maximum current for starter operation. Loose or corroded connections, relay contacts, or partially broken cables will result in slower than normal cranking speeds, and may even prevent the starter from cranking the engine.

In cases of starting system trouble, the owner may have discharged the battery before calling for assistance. At the time the trouble occurs, the owner is more interested in getting the engine started than in knowing the cause of the trouble. A road service procedure is presented to aid the service technician in such cases of starting trouble. Once the engine is started, be sure to follow diagnosis procedures in order to locate the cause of the starting difficulty. The road service is not a part of the diagnosis procedures.

Refer to the Truck Diagnosis Manual, Form FD-7962-70T, for diagnosis information and procedures.

Refer to the Wiring Diagrams Manual, Form 7795P-73, for electrical schematic wiring diagrams and the locations of wiring harnesses.

PART 28-02 Positive Engagement Starter

This Information Applies To All Truck Gasoline Engines Except Super Duty

COMPONENT INDEX	Page	COMPONENT INDEX	Page
DESCRIPTION AND OPERATION	02-01	Starter Drive Replacement	02-05
DISASSEMBLY AND OVERHAUL	02-04	Starter Terminal Replacement	02-06
Armature Removal	02-06	REMOVAL AND INSTALLATION	02-03
Brush Replacement	02-06	SPECIFICATIONS	02-07
Cleaning and Inspection	02-04	TESTING	02-01

DESCRIPTION AND OPERATION

POSITIVE ENGAGEMENT STARTER

The starting system includes the starter motor with an integral positive-engagement drive, the battery, a remote control starter switch (part of the ignition switch), the neutral-start switch (used with automatic transmissions), the starter relay, and heavy circuit wiring.

Turning the ignition key to the START position actuates the starter relay through the starter control circuit. The starter relay then connects the battery to the starter.

Vehicles equipped with an automatic transmission have a neutral-start switch in the starter control circuit. This prevents operation of the starter on vehicles with an automatic transmission if the selector lever is not in the N (neutral) or P (park) position.

When the starter is not in use, one of the field coils is connected directly to ground through a set of contacts (Fig. 1). When the starter is first connected to the battery, a large current flows through the grounded field coil, actuating a movable pole shoe. The pole shoe is attached to the starter drive plunger lever and thus the drive is forced into engagement with the flywheel.

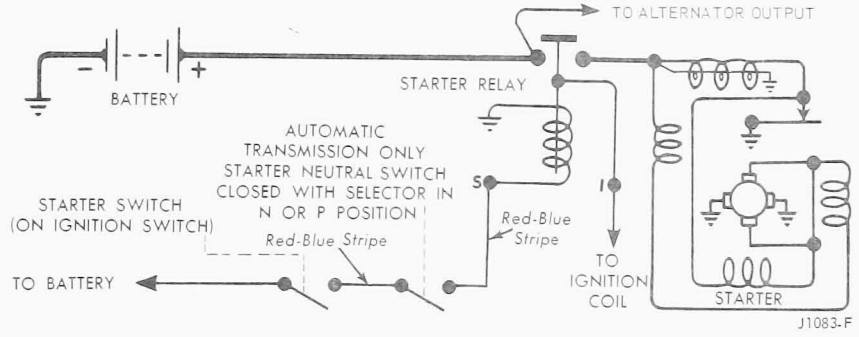

FIG. 1 Starting Circuit

When the movable pole shoe is fully seated, it opens the field coil grounding contacts and the starter is then in normal operation. Normal field current is used to maintain the movable pole shoe in the fully seated position during the time that the starter is cranking the engine.

TESTING

ROAD SERVICE

On road service calls, connect a booster battery to the system for cases of a starter that will not crank the engine or a starter that cranks the engine very slowly. If the starter does not turn the engine over, even with the booster battery attached, refer to the following tests. **Be certain that correct battery voltage polarity is observed when using a booster battery; positive to positive, and negative to negative connection of the auxiliary cables. Be sure that all lights are OFF when using a booster battery.DO NOT USE A BOOSTER BATTERY OR BATTERIES WITH A VOLTAGE GREATER THAN THE VEHICLE BATTERY VOLTAGE. TO DO SO MAY CAUSE DAMAGE TO THE STARTER.**When the engine is started with a booster battery, be certain the engine is at idle speed before disconnecting the booster battery.

ON VEHICLE TESTING

STARTER DRIVE AND STARTER TEST

Flood the warm engine by pumping the accelerator eight to ten times. Turn the ignition key to start and hold it in

the start position. The engine should fire immediately, but should not start and run. The starter should continue to crank the engine. This indicates a normal, acceptable starter drive. If the engine stops turning and the starter spins at high speed, the drive is not operating properly and should be replaced. Whenever possible, remove the plunger cover to observe if the plunger pole is operating while the starter is on the vehicle. **Do not damage the exposed switch during starter removal or installation.**

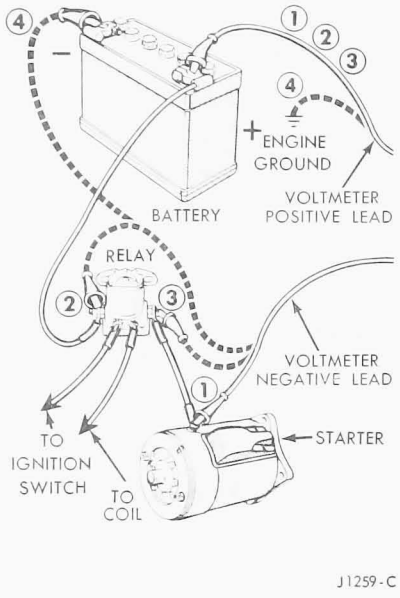

FIG. 2 Starter Cranking Circuit Test

ALTERNATE STARTER DRIVE TEST

1. Pull the push-on connector from the ignition coil primary terminal. Place the connector loosely on the coil terminal.
2. Connect a remote control starter switch to the starter relay.
3. Turn the ignition switch key to the ON position and depress the remote control starter switch. As soon as the engine begins to run, pull the push-on connector from the coil terminal while holding the remote control switch in the **start** position. Pulling the wire off the coil **kills** the ignition, and the **dead** engine should now be cranked by the starter.
4. Observe to see if the starter begins to crank the **dead** engine and if it continues to crank the engine until the remote control switch is released. If the starter does not crank the **dead** engine, the drive assembly is slipping.
5. Repeat the test at least three times in succession to detect intermittent operation.

STARTER CRANKING CIRCUIT TEST

Excessive resistance in the starter circuit can be determined from the results of this test. Make the test connections as shown in Fig. 3. Crank the engine with the ignition OFF. This is accomplished by disconnecting the grounding the high tension lead from the ignition coil and by connecting a jumper from the battery terminal of the starter relay to the S terminal of the relay.

The voltage drop in the circuit will be indicated by the voltmeter (0 to 2 volt range). Maximum allowable voltage drop should be:

1. With the voltmeter negative lead connected to the starter terminal and the positive lead connected to the battery positive terminal (Fig. 2, connection (1)) ...0.5 volt.
2. With the voltmeter negative lead connected to the battery terminal of the starter relay and the positive lead connected to the positive terminal of the battery (Fig. 2, connection (2))...0.1 volt.
3. With the voltmeter negative lead connected to the starter terminal of the starter relay and the positive lead connected to the positive terminal of the battery (Fig. 2, connection (3))...0.3 volt.
4. With the voltmeter negative lead connected to the negative terminal of the battery and the positive lead connected to the engine ground (Fig. 2, connection (4))...0.1 volt.

STARTER LOAD TEST

Connect the test equipment as shown in Fig. 3. Be sure that no current

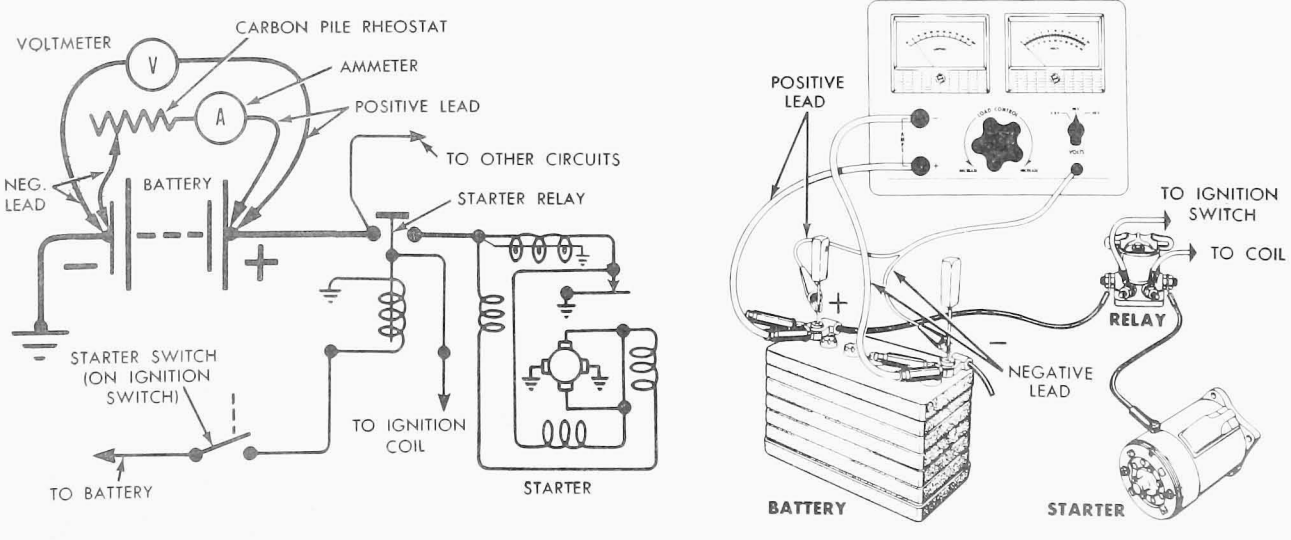

FIG. 3 Starter Load Test

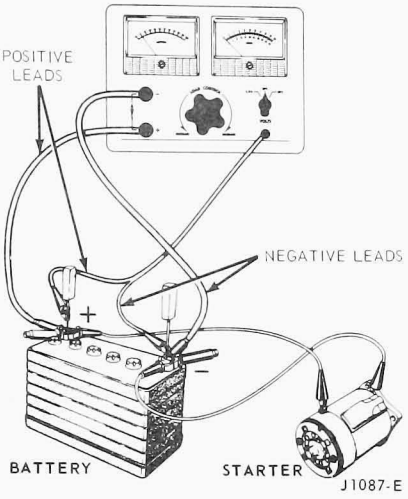

FIG. 4 Starter No-Load Test on Test Bench

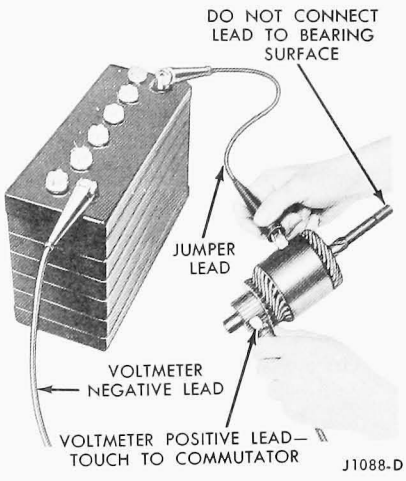

FIG. 5 Armature Grounded Circuit Test

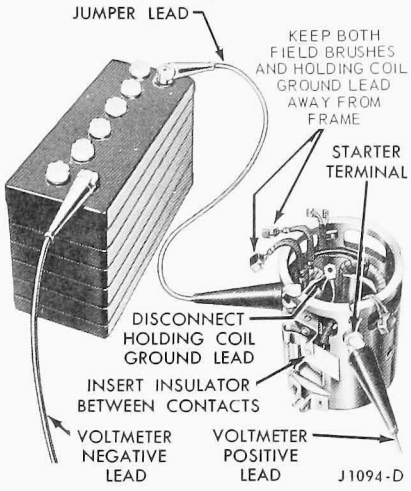

FIG. 6 Field Grounded Circuit Test

is flowing through the ammeter and heavy-duty carbon pile rheostat portion of the circuit (rheostat at maximum counterclockwise position).

Crank the engine with the ignition OFF, and determine the exact reading on the voltmeter. This test is accomplished by disconnecting and grounding the high tension lead from the ignition coil, and by connecting a jumper from the positive battery terminal to the "S" terminal of the starter relay.

Stop cranking the engine. Then reduce the resistance of the carbon pile until the voltmeter indicates the same reading as that obtained while the starter cranked the engine. The ammeter will indicate the starter current draw under load.

BENCH TESTS

STARTER NO-LOAD TEST

The starter no-load test will uncover open or shorted windings, rubbing armature, and bent armature shaft. The starter can be tested, at no-load, on the test bench only.

Make the test connections as shown in Fig. 4. The starter will run at no-load. Be sure that no current is flowing through the ammeter (rheostat at maximum counterclockwise position). Determine the exact reading on the voltmeter.

Disconnect the starter from the battery. Then, reduce the resistance of the rheostat until the voltmeter indicates the same reading as that obtained while the starter was running. The ammeter will indicate the starter no-load current draw.

ARMATURE OPEN CIRCUIT TEST—ON TEST BENCH

An open circuit armature may sometimes be detected by examining the commutator for evidence of burning. A spot burned on the commutator is caused by an arc formed every time the commutator segment, connected to the open circuit winding, passes under a brush.

ARMATURE AND FIELD GROUNDED CIRCUIT TEST—ON TEST BENCH

This test will determine if the winding insulation has been damaged, permitting a conductor to touch the frame or armature core.

To determine if the armature windings are grounded, make the connections as shown in Fig. 5. If the voltmeter indicates any voltage, the windings are grounded.

Grounded field windings can be detected by making the connections as shown in Fig. 6. If the voltmeter indicates any voltage, the field windings are grounded.

REMOVAL AND INSTALLATION

POSITIVE ENGAGEMENT STARTER

1. Raise the vehicle on a hoist (light vehicles).
2. Disconnect the starter cable at the starter terminal.
3. Remove the starter mounting bolts. Remove the starter assembly (Fig. 7).
4. Position the starter assembly to the flywheel housing, and start the mounting bolts.
5. Snug all bolts while holding the starter squarely against its mounting surface and fully inserted into the pilot hole. Torque the bolts to specification.
6. Connect the starter cable.
7. Lower the vehicle. Check the operation of the starter.

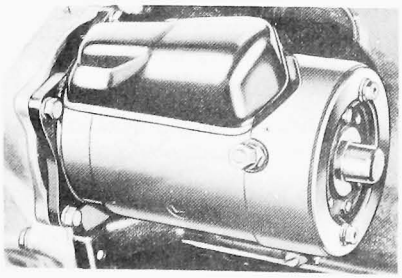

FIG. 7 Starter Mounting

OVERHAUL

POSITIVE ENGAGEMENT STARTER

Use the following procedures when it becomes necessary to completely overhaul the starter. Fig. 8 illustrates a partially disassembled starter.

Disassembly

1. Loosen the brush cover band retaining screw and remove the brush cover band and the starter drive plunger lever cover. Observe the lead positions for assembly and then remove the commutator brushes from the brush holders.
2. Remove the through bolts, starter drive end housing, and the starter drive plunger lever return spring.
3. Remove the pivot pin retaining the starter gear plunger lever and remove the lever and the armature.
4. Remove the stop ring retainer. Remove and discard the stop ring retaining the starter drive gear to the end of the armature shaft, and remove the starter drive gear assembly.
5. Remove the brush end plate.
6. Remove the two screws retaining the ground brushes to the frame.
7. On the field coil that operates the starter drive gear actuating lever, bend the tab up on the field coil retaining sleeve and remove the sleeve.
8. Remove the three coil-retaining screws, using Tool 10044-A and an arbor press (Fig. 9). The arbor press prevents the wrench from slipping out of the screw. Unsolder the field coil leads from the terminal screw, and remove the pole shoes and coils from the frame. Use a 300-watt solder iron.
9. Cut (or unsolder) the insulated brush leads from the field coils, as close to the field connection point as possible.
10. Remove the starter terminal nut, washer, insulator and terminal from the starter frame. Remove any excess solder from the terminal slot.

Cleaning and Inspection

1. Use a brush or air to clean the field coils, armature, commutator, armature shaft, brush end plate, and drive end housing. Wash all other parts in solvent and dry the parts.
2. Inspect the armature windings for broken or burned insulation and unsoldered connections.
3. Check the armature for open circuits and grounds.

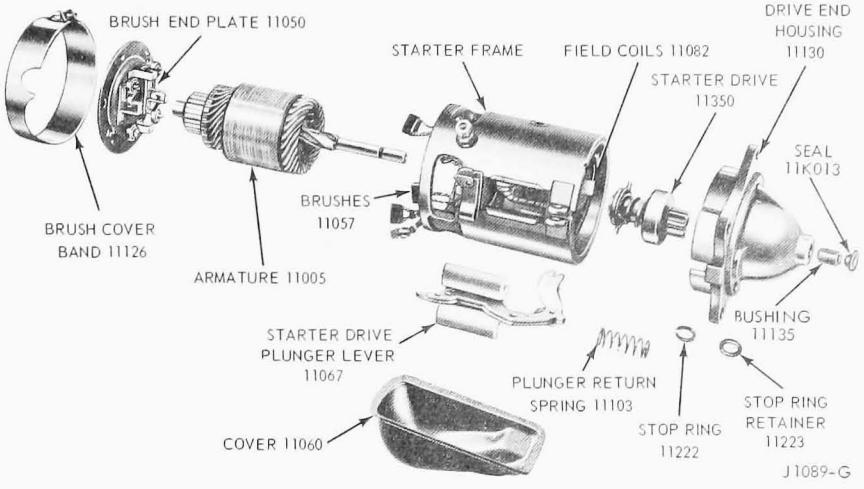

FIG. 8 Starter Disassembled

4. Check the commutator for runout (Fig. 10). Inspect the armature shaft and the two bearings for scoring and excessive wear. If the commutator is rough, or more than 0.005 inch out-of-round, turn it down.
5. Check the brush holders for broken springs and the insulated brush holders for shorts to ground. Tighten any rivets that may be loose. Replace the brushes if worn to 1/4 inch in length.
6. Check the brush spring tension. Replace the springs if the tension is not within specified limits (40 ounces minimum).
7. Inspect the field coils for burned or broken insulation and continuity. Check the field brush connections and lead insulation. A brush kit and a contact kit are available. All other assemblies are to be replaced rather than repaired.
8. Examine the wear pattern on the starter drive teeth. The pinion teeth must penetrate to a depth greater than 1/2 the ring gear tooth depth (Fig. 11), to eliminate premature ring gear and starter drive failure.
9. Replace starter drives and ring gears with milled, pitted or broken teeth or that show evidence of inadequate engagement (Fig. 11).

Assembly

1. Install the starter terminal, insulator, washers, and retaining nut in the frame (Fig. 12). Be sure to position the slot in the screw perpendicular to the frame end surface.

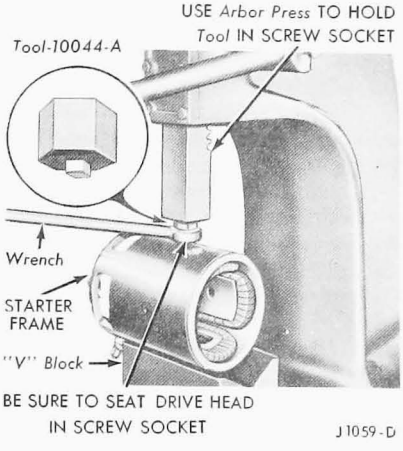

FIG. 9 Pole Shoe Screw Removal

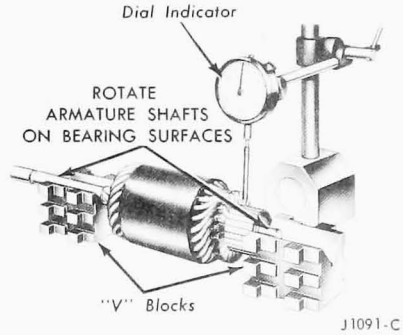

FIG. 10 Commutator Runout Check

2. Position the coils and pole pieces, with the coil leads in the terminal screw slot, and then install the retaining screws (Fig. 8). As the pole shoe screws are tightened, strike the

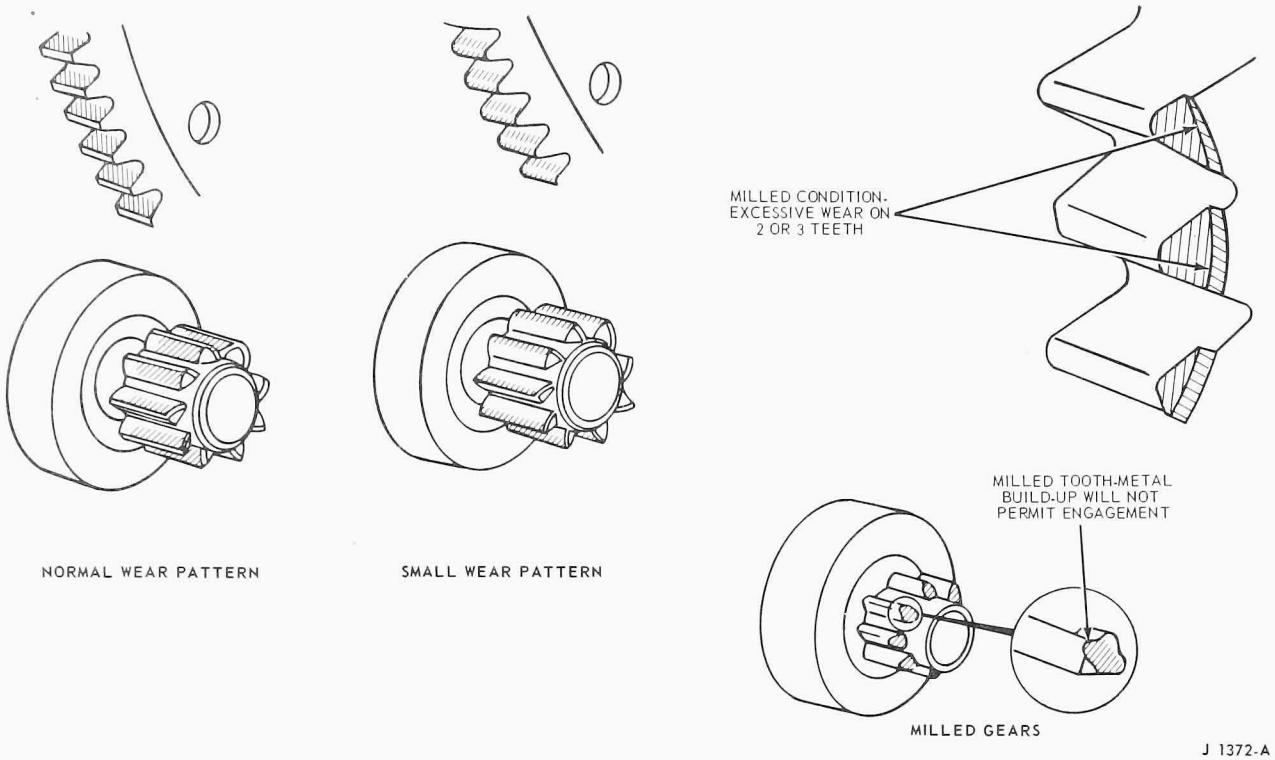

FIG. 11 Pinion and Ring Gear Wear Patterns

frame several sharp blows with a soft-faced hammer to seat and align the pole shoes, then stake the screws.

3. Install the solenoid coil and retainer and bend the tabs to retain the coils to the frame.
4. Solder the field coils and solenoid wire to the starter terminal using rosin core solder. Use a 300-watt iron.
5. Check for continuity and grounds in the assembled coils.
6. Position the new insulated field brushes lead on the field coil terminal. Install the clip provided with the brushes to hold the brush lead to the terminal. Solder the lead, clip, and terminal together, using rosin core solder (Fig. 12). Use a 300-watt iron.
7. Position the solenoid coil ground terminal over the nearest ground screw hole.
8. Position the ground brushes to the starter frame and install the retaining screws (Fig. 12).
9. Position the starter brush end plate to the frame with the end plate boss in the frame slot.
10. Apply a thin coating of Lubriplate 777 on the armature shaft splines. Install the starter motor drive gear assembly to the armature shaft and install a new retaining stop ring. Install a new stop retainer.
11. Position the fiber thrust washer on the commutator end of the armature shaft and position the armature in the starter frame.
12. Partially fill the drive end housing bearing bore with grease (approximately 1/4 full). Position the starter drive gear plunger lever to the frame and starter drive assembly, and install the pivot pin.
13. Position the starter drive plunger lever return spring and the drive end housing to the frame and install and tighten the through bolts to specification (55-75 inch pounds). **Do not pinch the brush leads between the brush plate and the frame.** Be sure that the stop ring retainer is seated properly in the drive housing.
14. Install the brushes in the brush holders. **Be sure to center the brush springs on the brushes.**
15. Position the drive gear plunger lever cover on the starter and install the brush cover band with a gasket. Tighten the band retaining screw.
16. Check the starter no-load current draw.

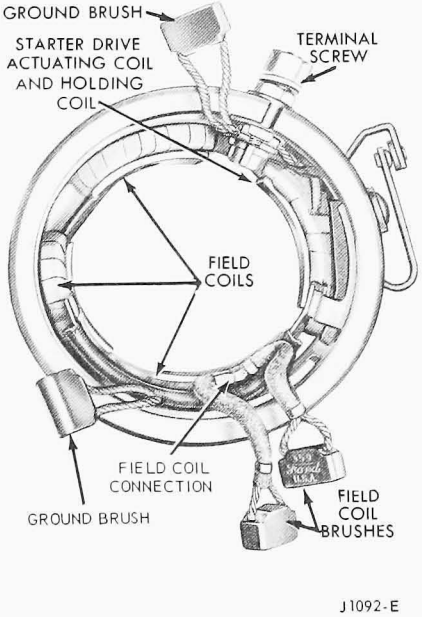

FIG. 12 Field Coil Assembly

STARTER DRIVE REPLACEMENT

1. Loosen and remove the brush cover band and the starter drive plunger lever cover (Fig. 8).
2. Loosen the through bolts enough to allow removal of the drive end housing and the starter drive plunger lever return spring.

3. Remove the pivot pin retaining the starter drive plunger lever and remove the lever.
4. Remove the drive gear stop ring retainer and stop ring from the end of the armature shaft and remove the drive gear assembly.
5. Apply a thin coating of Lubriplate 777 on the armature shaft splines. Install the drive gear assembly on the armature shaft and install a new stop ring.
6. Position the starter gear plunger lever on the starter frame and install the pivot pin. **Be sure that the plunger lever properly engages the starter drive assembly.**
7. Install a new stop-ring retainer. Partially fill the drive end housing bearing bore with grease (approximately 1/4 full). Position the starter drive plunger lever return spring and drive end housing to the starter frame, and then tighten the through bolts to specifications (55-75 inch pounds).
8. Position the starter drive plunger lever cover and the brush cover band, with its gasket, on the starter. Tighten the brush cover band retaining screw.

BRUSH REPLACEMENT

Replace the starter brushes when they are worn to 1/4 inch. Always install a complete set of new brushes.

1. Loosen and remove the brush cover band, gasket, and starter drive plunger lever cover. Remove the brushes from their holders.
2. Remove the two through bolts from the starter frame.
3. Remove the drive end housing, and the plunger lever return spring.
4. Remove the starter drive plunger lever pivot pin and lever, and remove the armature.
5. Remove the brush end plate.
6. Remove the ground brush retaining screws from the frame and remove the brushes.
7. Cut the insulated brush leads from the field coils, as close to the field connection point as possible.
8. Clean and inspect the starter motor.
9. Replace the brush end plate if the insulator between the field brush holder and the end plate is cracked or broken.
10. Position the new insulated field brushes lead on the field coil connection. Position and crimp the clip provided with the brushes to hold the brush lead to the connection. Solder the lead, clip, and connection together, using rosin core solder (Fig. 12). Use a 300-watt iron.
11. Install the ground brush leads to the frame with the retaining screws.
12. Clean the commutator with 00 or 000 sandpaper.
13. Position the brush end plate to the starter frame, with the end plate boss in the frame slot.
14. Install the armature in the starter frame.
15. Install the starter drive gear plunger lever to the frame and starter drive assembly, and install the pivot pin.
16. Partially fill the drive end housing bearing bore with grease (approximately 1/4 full). Position the return spring on the plunger lever, and the drive end housing to the starter frame. Install the through bolts and tighten to specified torque (55-75 inch pounds). Be sure that the stop ring retainer is seated properly in the drive end housing.
17. Install the commutator brushes in the brush holders. Center the brush springs on the brushes.
18. Position the plunger lever cover and the brush cover band, with its gasket on the starter. Tighten the band retaining screw.
19. Connect the starter to a battery to check its operation.

ARMATURE REPLACEMENT

1. Loosen the brush cover band retaining screw and remove the brush cover band, gasket, and the plunger lever cover. Remove the brushes from their holders.
2. Remove the through bolts, the drive end housing, and the drive plunger lever return spring.
3. Remove the pivot pin retaining the starter gear plunger lever, and remove the lever.
4. Remove the armature. If the starter drive gear assembly is being reused, remove the stop ring retainer and the stop ring from the end of the armature shaft, and remove the drive.
5. Place the drive gear assembly on the new armature with a new stop ring.
6. Install the armature in the starter frame.
7. Position the drive gear plunger lever to the frame and drive gear assembly and install the pivot pin.
8. Partially fill the drive end housing bearing bore with grease (approximately 1/4 full). Position the drive plunger lever return spring, the drive end housing and the front end plate to the starter frame; then, install and tighten the through bolts to specification. Be sure that the stop ring retainer is seated properly in the drive housing.
9. Place the brushes in their holders, and center the brush springs on the brushes.
10. Position the plunger lever cover and the brush cover band, with its gasket, and then tighten the retaining screw.
11. Connect the starter to a battery to check its operation.

STARTER TERMINAL

Removal

1. Loosen the brush cover band retaining screw and remove the brush cover band and the starter drive plunger lever cover. Observe the lead positions for assembly and then remove the commutator brushes from the brush holders.
2. Remove the through bolts, starter drive end housing, starter drive plunger lever return spring, and the brush end plate.
3. Remove the pivot pin retaining the starter gear plunger lever and remove the lever and the armature assembly.
4. Unsolder the field coil and solenoid wire leads from the terminal screw. Use a 300-watt soldering iron.

Remove the starter terminal nut, washer, insulator and terminal from the starter frame.

Installation

1. Install the new starter terminal, insulator, washers, and retaining nut in the frame (Fig. 8). Be sure to position the slot in the screw perpendicular to the frame end surface.
2. Solder the field coils and solenoid wire to the starter terminal using rosin core solder. Use a 300-watt iron.
3. Check for continuity and grounds in the assembled coils.
4. Position the starter brush end plate to the frame with the end plate boss in the frame slot.
5. Position the armature in the starter frame.
6. Position the starter drive gear plunger lever to the frame and starter drive assembly, and install the pivot pin.
7. Partially fill the drive end housing bearing bore with grease (approximately 1/4 full). Position the starter drive plunger lever return spring and the drive end housing to the frame and install and tighten the through bolts to specification (55-75 in-lbs). **Do not pinch the brush leads between the brush plate and the frame.** Be sure that the stop ring retainer is seated properly in the drive housing.

8. Install the brushes in the brush holders. **Be sure to center the brush springs on the brushes.**
9. Position the drive gear plunger lever cover on the starter and install the brush cover band with a gasket. Tighten the band retaining screw.
10. Check the starter no-load current draw.

SPECIFICATIONS

POSITIVE ENGAGEMENT STARTER

Positive Engagement Starter Motor						Starter Brushes			Through Bolt Torque (In-Lbs)	Mounting Bolt Torque (Ft-Lbs)
Dia. (Inches)	Current Draw Under Normal Load (Amps)	Normal Engine Cranking Speed (rpm)	Min. Stall Torque @5 Volts (Ft-Lbs)	Max. Load (Amps)	No. Load (Amps)	Mfg. Length (Inches)	Wear Limit (Inches)	Spring Tension (Ounces)		
4	150–200	180–250	9.0	460	70	0.50	0.25	40	55–75	15–20
4-1/2	150–180	150–290	15.5	670	70	0.50	0.25	40	55–75	15–20
Maximum Commutator runout is 0.005 inch. Maximum starting circuit voltage drop (battery positive terminal to starter terminal) at normal engine temperature is 0.5 volt.										

SPECIAL TOOLS Ford Tool No.	Former No.	Description
TOOL 10044-A	10044-A	Generator Pole Screw Wrench

CJ 1430-B

SPECIAL TOOLS		
Ford Tool No.	Former No.	Description
TOOL 10044-A	10044-A	Generator Pole Screw Wrench

CJ1451-A

PART 28-10 Delco Remy Starter

This Information Applies To All Trucks with Diesel Engines

COMPONENT INDEX	Page	COMPONENT INDEX	Page
DESCRIPTION AND OPERATION	10-01	REMOVAL AND INSTALLATION	10-02
DISASSEMBLY AND OVERHAUL	10-04	SPECIFICATION	10-06
Armature Removal	10-06	TESTING	10-01
Brush Replacement	10-06		
Cleaning and Inspection	10-05		
Starter Drive Replacement	10-06		

DESCRIPTION AND OPERATION

The Delco starter is a 12-volt unit that has the solenoid mounted on the starter housing (Fig. 1). The solenoid is energized when the starter relay contacts are closed. This action engages the starter drive with the flywheel ring gear, starting the engine. An overrunning clutch in the drive protects the starter from excessive speed when the engine starts. The starter current flows through the solenoid energizing coil until the solenoid plunger is at the end of its travel. The plunger then closes a set of contacts that by-pass the energizing coil, letting the holding coil keep the starter drive engaged. A Typical installation of the Delco 12-volt starting system is shown in Fig. 3.

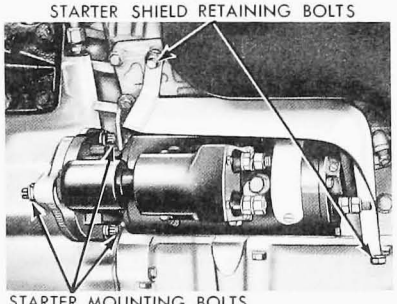

FIG. 1 Delco Starter Mounting

TESTING

ROAD SERVICE

On road service calls, connect a booster battery to the system for cases of a starter that will not crank the engine or a starter that cranks the engine very slowly. If the starter turns the engine over, but the engine still will not start, even with the booster battery attached, refer to the following tests. **Be certain that correct battery polarity is observed when using a booster battery; positive to positive, and negative to negative connection of the auxiliary cables.**

ON VEHICLE TESTING

STARTER CRANKING CIRCUIT TEST

Excessive resistance in the starter circuit can be determined from the results of this test. Make the test connections as shown in Fig. 2 on each set of batteries. Crank the engine with the ignition OFF. This is accomplished by disconnecting and grounding the high tension lead from the ignition coil and by connecting a jumper from the battery terminal of the starter solenoid to the energizing terminal (black wire), of the starter solenoid.

The voltage drop in the circuit will be indicated by the voltmeter (0 to 2 volt range). Maximum allowable voltage drop for each set of batteries should be:

1. With the voltmeter negative lead connected to the starter terminal and the positive lead connected to the battery positive terminal (Fig. 2, connection (1))...0.5 volt.
2. With the voltmeter negative lead connected to the battery terminal of the starter relay and the positive lead

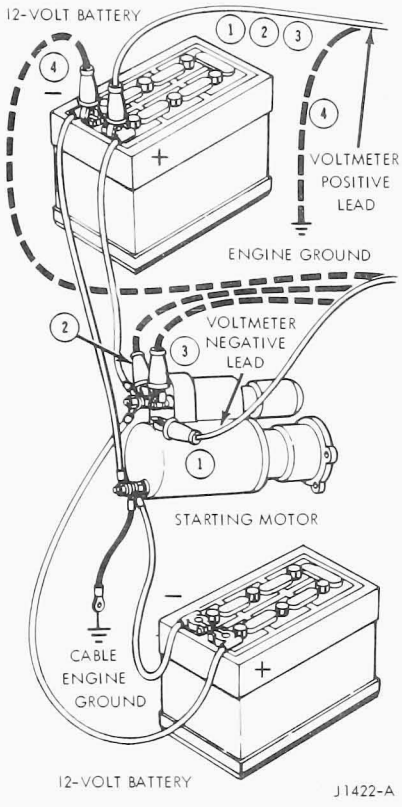

FIG. 2 Starter Cranking Circuit Test

connected to the positive terminal of the battery (Fig. 2, connection (2))...0.1 volt.

3. With the voltmeter negative lead connected to the starter terminal of the starter relay and the positive lead connected to the positive terminal of the battery (Fig. 2, connection (3))...0.3 volt.
4. With the voltmeter negative lead connected to the negative terminal of the battery and the positive lead connected to the engine ground (Fig. 2, connection (4))...0.1 volt.

STARTER LOAD AND NO-LOAD TESTS

Follow the procedures under these headings given in Part 28-02, Testing.

REMOVAL AND INSTALLATION

STARTER

Removal

1. Open the battery box and disconnect the battery cables.
2. Remove one bolt and lock washer securing the battery cable retainer to the right rear cylinder head cover.
3. Remove the starter upper mounting bolt (Fig. 1).
4. Remove the clamps securing the resonator inlet pipes to the exhaust manifolds, and position the inlet pipes out of the way.
5. Remove the starter shield retaining bolts (Fig. 1).
6. Disconnect the starter and starter solenoid wires. Tag the wires to facilitate connection at the proper terminals during starter installation.
7. Remove the two remaining starter mounting bolts and lock washers. Remove the starter.

Installation

1. Position the starter on the engine, and install three bolts and lock washers. Tighten securely.
2. Connect the solenoid wire to the starter terminal (Fig. 3).
3. Install the starter shield on the engine with two retaining bolts.
4. Connect the remaining starter wires to the starter terminals.
5. Connect the resonator inlet pipes to the exhaust manifolds, and secure with clamps.
6. Connect the battery cables and close the battery box. Check the operation of the starter.

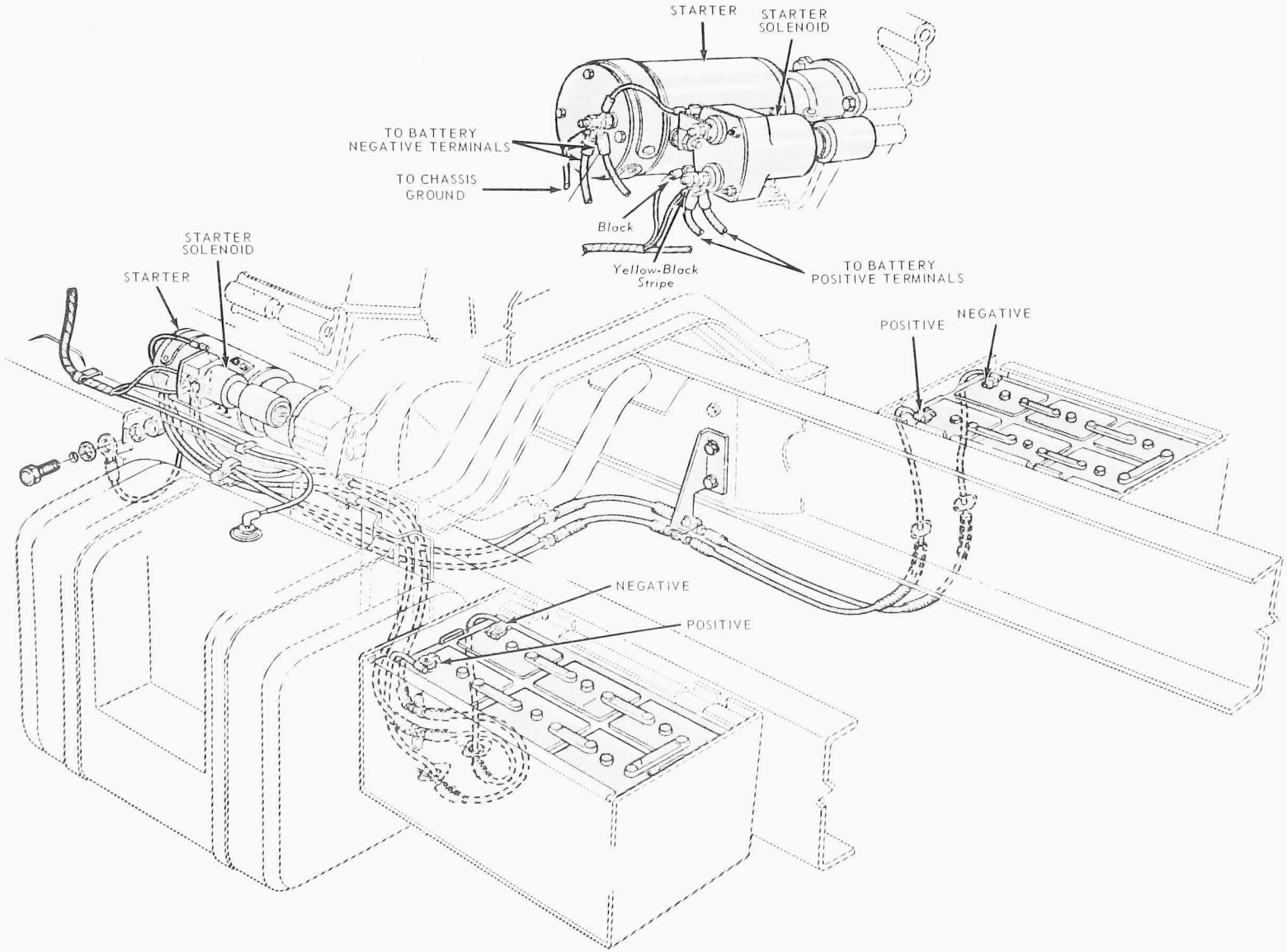

FIG. 3 12-Volt Delco Starter Cable Connections

OVERHAUL

12-VOLT STARTER

DISASSEMBLY

1. Thoroughly clean the outside of the starter.
2. Remove the four screws securing the inspection plates and gaskets to the starter frame.
3. Remove the four bolts securing the brush end plate, and rotate the end plate to expose two screws securing the field coil leads to the brush end plate. Remove the screws.
4. Remove the brush end plate (Fig. 4). If the brushes are to be replaced, see Brush Removal and Installation.
5. Remove the large screw plug from the starter yoke housing.
6. Remove the six Allen-head screws securing the starter drive end plate (Fig. 4). Remove the end plate.
7. Remove the starter yoke adjusting nut.
8. Remove the five bolts securing the starter yoke housing, and remove the housing.
9. Remove the C-clip from the yoke center pin and drive the pin out.
10. Remove the starter clutch and drive assembly, and the armature from the starter frame.
11. To remove the solenoid assembly, proceed as follows: Remove the four screws attaching the solenoid to the starter frame. Remove the copper strap from the motor side of the solenoid-to-starter terminal. Remove the solenoid from the starter.
12. Disconnect the field coil connector from the solenoid motor terminal, and remove the lead from the solenoid ground terminal.
13. Remove the field coils from the starter frame by using a pole shoe screwdriver and arbor press.
14. To disassemble the solenoid, proceed as follows: Remove all wires and screws from the solenoid terminal end. Remove the four self-

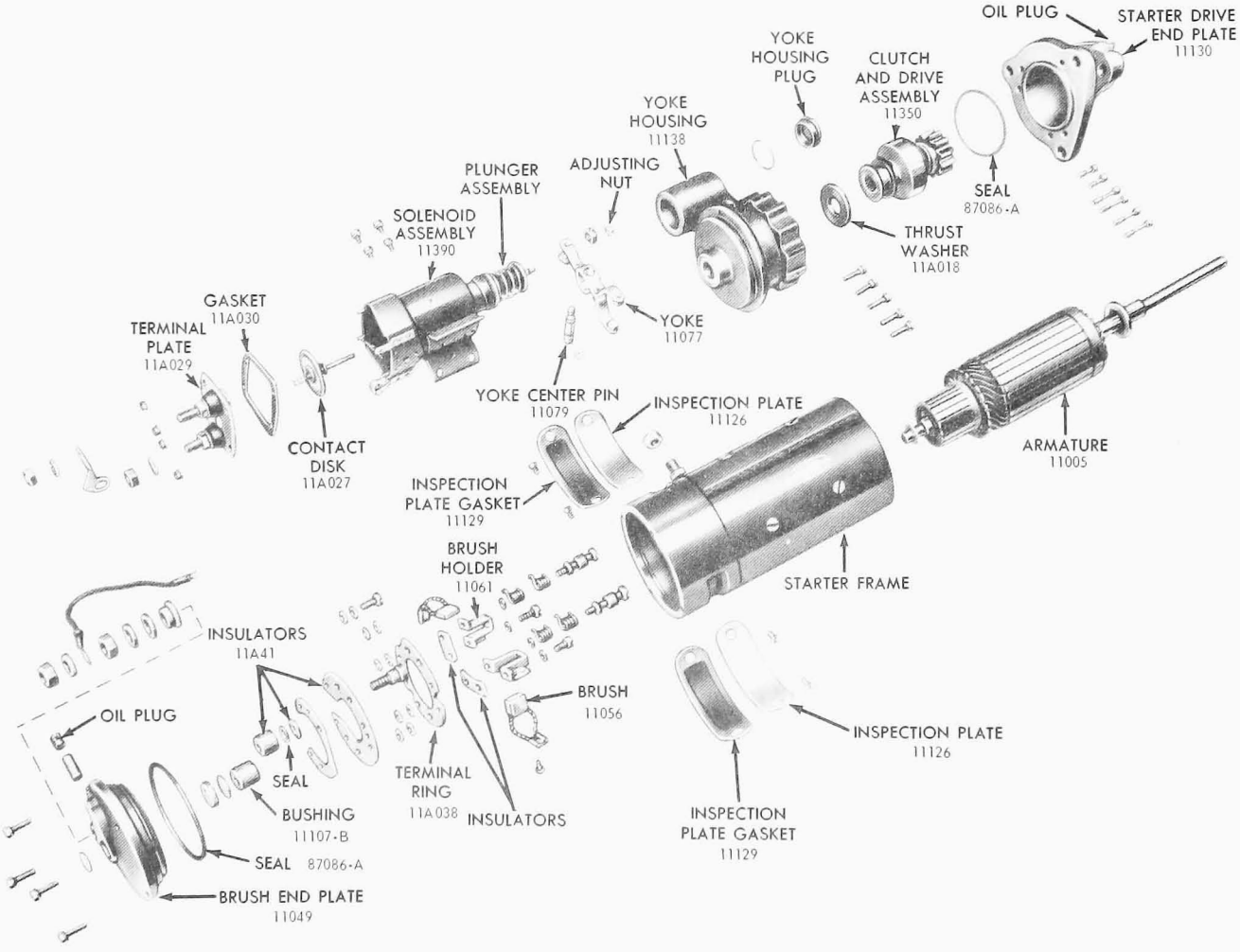

FIG. 4. Disassembled 12-Volt Delco Starter

locking nuts and nylon washers retaining the solenoid end plate; pull the plate away from the solenoid and remove one screw securing the internal wire. Remove the contact disc, plunger, and spring. To replace the contact bolts, remove the large nuts, washers and insulated washers, and remove the contact bolts. Replace the cork gasket, if necessary, and install the bolts, washers and nuts.

15. To disassemble the brush end plate, remove the three screws attaching the brush holder to the end plate. Remove the nut and lock washer on the terminal bolt and remove two fiber insulators, the rubber O-ring, and the fiber sleeve.

Assembly

1. If the starter solenoid assembly was disassembled, install the plunger and spring, and position the contact disk. Position the solenoid end plate, and install the internal wire. Install the four self-locking nuts and nylon washers which retain the end plate. Install the wires and screws to the outside terminals.
2. Assemble the field coils and pole shoes to the starter frame. Position the field terminal leads in the open windows of the frame.
3. Assemble the armature and brush end plate to the starter frame. Connect the two field leads to the brush brackets. Tap the end plate lightly after alignment, and install the four retaining bolts.
4. Using a drift, drop the brushes into position.
5. Lubricate the drive end bushing and splines of the armature shaft with SAE 10W oil. **Do not use heavier oil.**
6. Position the starter clutch and drive assembly.
7. Position the starter yoke, and install the center pin and C-clip.
8. Position the starter yoke housing and secure it in place with five bolts.
9. Position the drive end plate and secure it in place with six Allen-head screws. The two short screws are installed on the solenoid side of the starter.
10. Install the starter solenoid on the starter with four screws. Install the copper ground strap.
11. Install the yoke adjusting nut, and adjust the drive gear end play.
12. Install the large screw plug in the yoke housing.
13. Position the inspection covers and gaskets, and secure with four screws.

CLEANING AND INSPECTION

12-VOLT STARTER

1. Wipe the field coils, armature, commutator and armature shaft with a clean cloth. Wash the springs, shims, thrust washer, trip collar, locking collar, pinion assembly, pinion spring cover, and brush end plate assembly in solvent and dry the parts.
2. Inspect the armature for broken or burned insulation and unsoldered connections. Inspect the commutator surface for grooves, and check for runout.

If the surface of the commutator is rough or more than 0.002 inch out of round, turn it down. Do not undercut the mica.

3. Check the armature windings with a growler tester.
4. Inspect the ball recesses in the armature shaft for burrs caused by the locking balls. Use a fine oil stone to remove the burrs. Inspect the shaft helices for excessive wear.
5. With the starter disassembled, check the field windings with a growler light for shorts to the housing or pole shoes. Connect one growler light lead to the starter housing; connect the other growler lead to each of the field coil brush leads in turn. A short circuit will light the growler light. Replace damaged coils.
6. Examine the starter bushings for excessive wear. Replace worn or badly scored bushings.

Before assembling the starter, the armature bushing in the brush end plate should be lubricated by soaking for 24 hours in oil-SAE 10W/30W or SAE 5W/20W (subzero climates). To soak the bushing, plug one end and fill the bushing with oil. A new bushing should be similarly soaked before assembly.

7. Examine the contacts on the solenoid assembly, and if necessary, clean them with very fine sandpaper or crocus cloth.

The solenoid winding can be tested for internal shorts or open circuits with an ohmmeter. Connect the instrument across the winding and note the reading. The reading should be within the limits, 0.056-0.620 ohms for 12-volt starters. A low reading will generally indicate an internal short circuit, while no reading at all indicates an open circuit.

If the solenoid contacts are badly burned, or the solenoid winding is shorted replace the solenoid assembly.

8. Inspect the pinion teeth for excessive wear or damage from improper engagement. If a new pinion is to be installed, be sure it has the same number of teeth as the replaced component. Install the new pinion on the armature shaft and check for free movement. If necessary, the pinion and armature shaft can be lightly lapped together.
9. Check the tension of the starter springs for conformance to specifications.
10. Check the brushes for free movement in the brush holders. Inspect the brushes for excessive wear. Where brush leads are insulated, be sure that the insulation is not burned or worn.

The brushes should be well seated to the commutator; that is, worn to the commutator over at least 60 percent of the brush contact area. If not, fit the brushes to the commutator with fine sandpaper until the desired seating area is obtained. Do only one brush at a time. Clean the brushes and commutator with compressed air. Be sure that no abrasive particles are embedded in the contact area of the brushes.

New brushes are not ground to fit the commutator; therefore, they must be seated as described above.

Mark each brush and brush holder with which it was seated to permit assembly in the same position.

Check the tension of each brush spring at the point of contact with the brush. Use a spring scale hooked under the brush spring lip. Brush spring tension must be within specifications.

ENGAGEMENT MECHANISM

1. Pull the pinion forward by hand approximately 1/16 inch and release it. The pinion should return to its original position.
2. Energize the solenoid with the proper voltage battery. Connect the battery between the solenoid terminal and the ground terminal; the pinion should move forward a minimum of 1/4 inch.
3. With the solenoid energized, pull the pinion forward by hand toward its stop. The ball locking mechanism should now operate, locking the pinion in the forward position.
4. Disconnect the battery at the solenoid; the pinion must return to its normal position in one sharp movement.
5. Check the recoil spring action by applying a compression spring scale to the driving end of the armature shaft. The force required before backward movement of the shaft occurs should be 30-38 pounds.

STARTER DRIVE REPLACEMENT

1. Scribe a mark on the commutator-end plate, starter frame, drive end housing and lever housing for assembly.
2. Remove the through bolts and the commutator end plate.
3. Remove the drive-end housing, lever housing, armature and solenoid plunger as a unit.
4. Completely loosen the drive-end housing to lever housing screws, and separate the lever-end housing from the drive housing, drive assembly, and armature.
5. Remove the drive assembly stop retainer from the armature shaft, and remove the drive gear and lever-housing assembly from the armature shaft.
6. Separate the drive-gear assembly from the lever housing.
7. Position and the new drive-gear assembly and engage the shift lever in the drive-assembly flange. Position the four mounting bolts into the lever housing, position the lever housing assembly on the armature shaft and install the drive assembly stop retainer on the armature shaft.
8. Position the drive-end housing on the armature shaft, align the scribe marks made during disassembly, and tighten the drive-end housing to lever housing bolts.
9. Position the armature, lever housing and drive-end housing assembly to the starter frame, engaging the brushes onto the commutator. Align the scribe marks made during disassembly.
10. Position the commutator-end plate to the frame, align the scribe marks and install the through bolts.

BRUSH REPLACEMENT

12-VOLT STARTER

1. Thoroughly clean the outside of the starter.
2. Remove the four screws securing both inspection plates and gaskets to the starter frame.
3. Remove the four bolts securing the brush end plate, and rotate the end plate to expose two screws securing the field coil leads to the brush plate. Remove the screws.
4. Remove the brush end plate.
5. Remove the starter armature. Inspect for an open or grounded circuit.
6. If the surface of the commutator is rough or more than 0.002 inch out of round, turn down the commutator. Do not undercut the mica. Polish with 00 or 000 sandpaper to remove all burrs left by the turning operation. Be sure that no copper particles remain on the insulation between the segments.
7. Remove the six screws securing the brushes in the brush holders, and remove the eight brushes.
8. Install new brushes in the brush holders. Tighten the screws securely. Be certain that the brush tension springs are functioning correctly.
9. Position the armature in the starter. Position the brush end plate on the starter, with the brushes held in a retracted position by the brush springs. Be certain that the plate is located so that the field coil lead retaining screws can be installed.
10. Install the two field coil retaining screws, and secure the field coil leads in place.
11. Install the four bolts which attach the brush end plate to the starter frame.
12. Using a drift, drop the brushes into position.
13. Install the inspection plates and gaskets with the four attaching screws.

ARMATURE

To remove the armature, disassemble the starter with the exception of the field coils and brushes. Follow the starter disassembly procedures.

SPECIFICATIONS

DELCO STARTERS

Vendor	Current Draw Under Normal Load (Amperes)	Minimum Stall Torque @5 Volts (Ft-Lbs)	Minimum Stall Torque (Ft-Lbs)	Minimum Stall Torque Volts	Maximum Load (Amperes)	No-Load (Amperes)	Brushes: Mfg. Length (Inches)	Brushes: Wear Limit (Inches)	Brushes: Brush Spring Tension (Ounces)	Through Bolt Torque (In-Lbs)	Mounting Bolt Torque (Ft-Lbs): 3/8-In Bolt Two-Hole Mtg.	Mounting Bolt Torque (Ft-Lbs): Three-Hole Mtg.
Delco 12 Volt Positive Engagement	150(Gas) 270–375① 650–750②	15①	15	1.5	700	140	0.75	0.25	45	72–96		23–28
Delco 12 Volt Inertia	200	17.5	17.5	5	525	60	0.75	0.25	24	72–96		23–28

Maximum commutator runout in inches is 0.005. Maximum starting circuit voltage drop (battery + terminal to starter terminal) @ normal engine temperature 0.5 volt. ①Dorset Diesel ②Heavy Diesels

CJ1465-B

PART 28-11 Prestolite Starter

This Information Applies To All Trucks with 401, 477 and 534 C.I.D. Gasoline Engines

COMPONENT INDEX	Page	COMPONENT INDEX	Page
DESCRIPTION AND OPERATION	11-01	SPECIFICATIONS	11-03
DISASSEMBLY AND OVERHAUL	11-03	TESTING	11-02
REMOVAL AND INSTALLATION	11-03		

DESCRIPTION AND OPERATION

PRESTOLITE STARTER

The Prestolite starter is a heavy duty unit with an armature shaft center bearing (Fig. 1). An inertia starter drive with an overrunning clutch in the drive protects the starter from excessive speed when the engine starts.

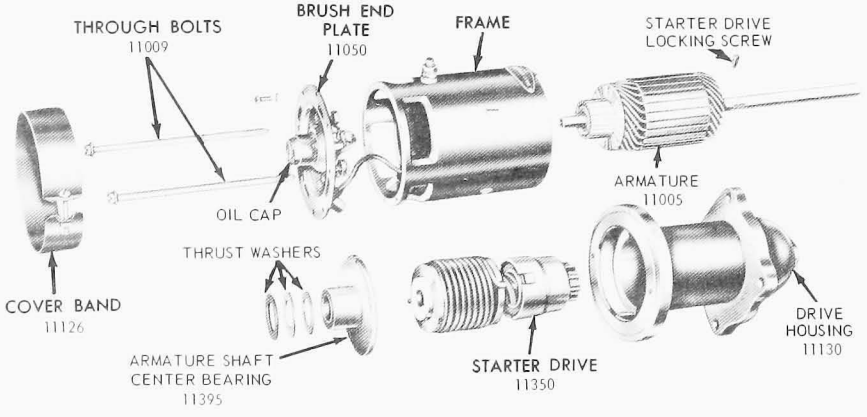

FIG. 1 Disassembled Prestolite Starter

TESTING

ROAD SERVICE

On road service calls, connect a booster battery to the system for cases of a starter that will not crank the engine or a starter that cranks the engine very slowly. If the starter cranks the engine, but the engine still will not start, even with the booster battery attached, refer to the following tests. **Be certain that correct battery polarity is observed when using a booster battery; positive to positive, and negative to negative connection of the auxiliary cables.**

STARTER CRANKING CIRCUIT TEST

Follow the procedure given in Part 28-02, Testing, Starter Cranking Circuit Test.

STARTER LOAD AND NO-LOAD TESTS

Follow the procedures under these headings given in Part 28-02, Testing.

REMOVAL AND INSTALLATION

PRESTOLITE STARTER

1. Disconnect the starter cable at the starter terminal.
2. Remove the starter mounting bolts, and remove the starter assembly. **It may be necessary to tilt the starter slightly to clear the starter drive around the flywheel.**
3. Position the starter assembly to the flywheel housing, and start the mounting bolts. On a vehicle with an automatic transmission, the transmission dipstick tube bracket is mounted under the starter side mounting bolt.
4. Snug all bolts and then tighten them to specifications (Specifications at end of this Part).
5. Connect the starter cable and check the starter operation.

OVERHAUL

PRESTOLITE STARTER

DISASSEMBLY

A disassembled view of the Prestolite starter is shown in Fig. 1.

1. Remove the cover band and remove the brushes from their holders.
2. Remove the two through bolts and the brush end plate mounting screws.
3. Remove the armature, brush end plate and drive housing from the frame. Remove the terminal from the frame.
4. Remove the four field pole shoes and slide the field coils out of the frame. If the brushes are to be replaced at this time, unsolder the old brushes from the field coils and solder new brushes in their place. The ground brushes are riveted to the brush end plate. Remove the rivets and rivet new brushes to the end plate.
5. The starter drive is held in position on the armature shaft by a locking screw and two keys. Compress the starter drive spring slightly on the armature end of the spring and remove the locking screw. Slide the starter drive off the armature shaft. No further disassembly of the drive should be made. The drive is serviced as a complete unit. **Do not lubricate the Prestolite starter drive. It should run freely after cleaning in kerosene and wiping dry.**

PARTS REPAIR OR REPLACEMENT

Nicks and scratches may be removed from the commutator by turning it down. All other serviced parts are to be replaced rather than repaired.

ASSEMBLY

1. Position the thrust washers and armature shaft center bearing on the armature shaft in the order shown in Fig. 1.
2. Slide the drive on the shaft, and install the drive locking screw.
3. Position the armature and drive in the drive housing so that the slot in the armature shaft center bearing support plate engages the pin in the drive housing, and the bearing is seated firmly in the housing.
4. Slide the field coils into the frame with the brush leads opposite the terminal hole, and install the field pole shoes. **As the pole shoe screws are tightened, strike the frame several sharp blows with a soft-faced hammer to seat and align the pole shoes. Install the terminal.**
5. Attach the brush end plate to the frame with the six screws. Position the armature and drive housing into the frame with the frame dowel engaging the hole in the drive housing, and install the through bolts.
6. Install the brushes in their holders making certain that the brush springs are centered on the brushes and that the insulated brush leads are clear of the armature.
7. Install the cover band, oil felt and oil cap. Put a few drops of engine oil in the oil cap opening.

SPECIFICATIONS

PRESTOLITE STARTER

Vendor	Current Draw Under Normal Load (Amperes)	Minimum Stall Torque		Maximum Load (Amperes)	No-Load (Amperes)	Brushes			Through Bolt Torque (In-Lbs)	Mounting Bolt Torque (Ft-Lbs)
		(Ft-Lbs)	Volts			Mfg. Length (Inches)	Wear Limit (Inches)	Brush Spring Tension (Ounces)		
Prestolite	200	17.2	5	525	60	0.46–0.48	0.25	45–53	72–96	23–28

Maximum commutator runout in inches is 0.005. Maximum starting circuit voltage drop (battery + terminal to starter terminal) at normal engine temperature 0.5 volt.

CJ1466-A

Mark Corp
January 73 365-127-73B Litho in U.S.A.

Ford Marketing Corporation
Ford Customer Service Division
Service Technical Communications Department

Ford

1973 TRUCK SHOP MANUAL

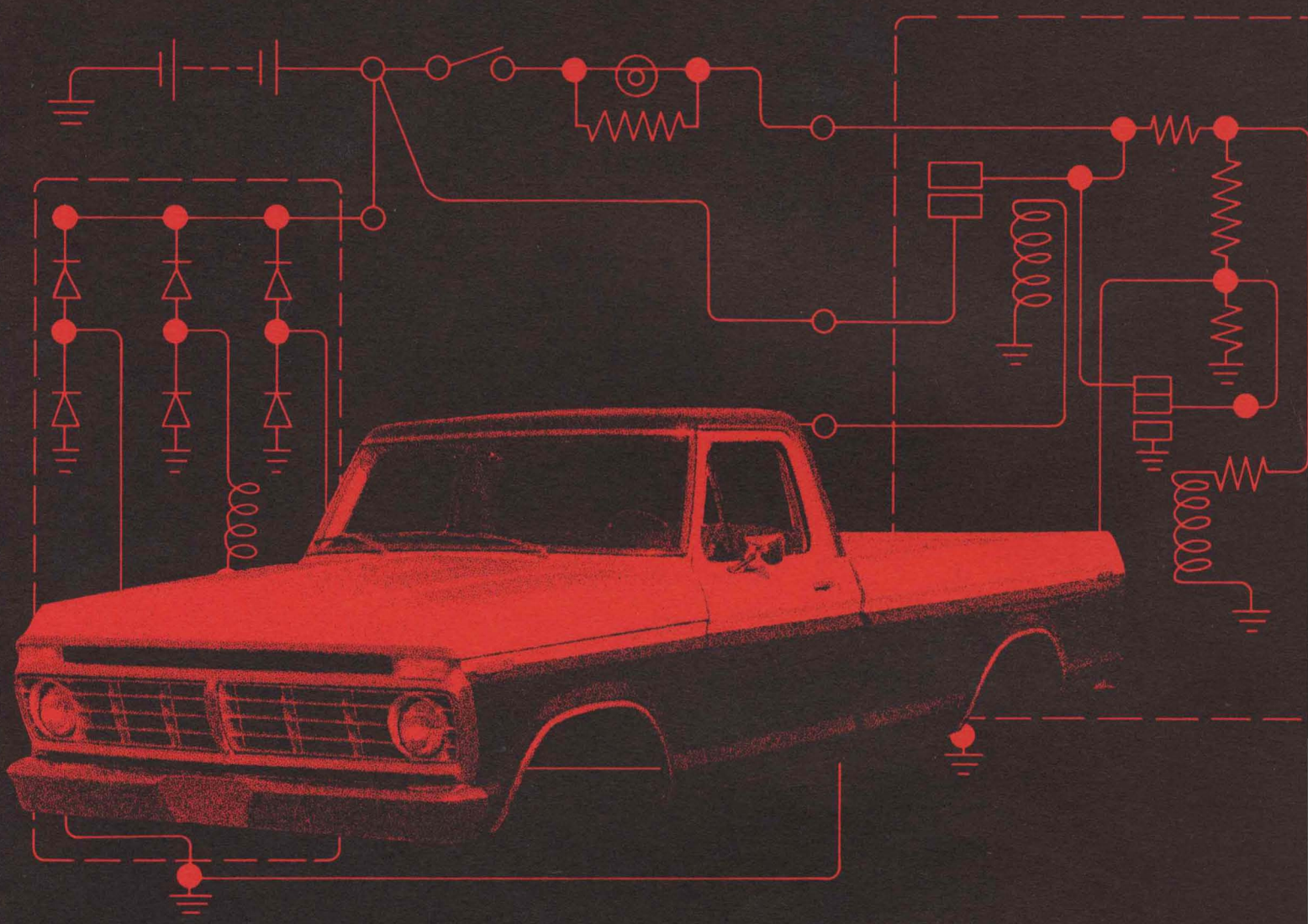

Volume 3 & 4

Body & Electrical

1973 TRUCK SHOP MANUAL

Volume III and IV
Electrical and Body

Group Index

Vol. I		Identification Codes	10
		Wheels and Tires	11
		Brakes	12
		Steering	13
		Suspension	14
		Driving Axles and Drive Shafts	15
		Clutch and Manual Transmission	16
		Automatic Transmission	17
Vol. II		Vehicle Identification	20
		Gasoline Engines	21
		Diesel Engines	22
		Ignition System	23
		Fuel System—Gasoline	24
		Fuel System—Diesel	25
		Exhaust System	26
		Cooling System	27
		Starting System	28
Vol. III		**Identification Codes**	**30**
		Charging System	**31**
		Lighting System	**32**
		Instruments, Clusters and Controls	**33**
		Main Wiring Harnesses and Circuit Protection	**34**
		Auxiliary Equipment	**35**
		Ventilating, Heating and Air Conditioning	**36**
Vol. IV		**Seats**	**41**
		Window Glass and Mechanisms	**42**
		Stationary Window Glass	**43**
		Doors, Hood & Tailgate	**44**
		Interior Trim	**45**
		Tops	**46**
		Body Shell, Exterior Trim, Frame & Underbody	**47**
Vol. V		Maintenance and Lubrication	50

Ford Marketing Corporation
Ford Customer Service Division
Service Technical Communications Department

First Printing—January, 1973

© Ford Marketing Corporation, Dearborn, Michigan

FOREWORD

This manual is divided into five volumes: 1 – Chassis, 2 – Engine, 3 – and 4 – Electrical and Body, 5 – Maintenance and Lubrication. These volumes should provide Service Technicians with complete information covering normal service repairs on all 1973 model trucks built by the Ford Companies in the U. S. and Canada. As changes in the product occur, this information will be updated by Technical Service Bulletins. When issued, T.S.B. information always supersedes the information in the manual.

Information in each volume is grouped by system or component plus "General Service" part which contains information common to several similar components.

The table of contents on the first page of each volume indicates the general content of the book and provides a handy tab locator to make it easy to find the first page of each "Group." That page will contain an index to "Parts" and the first page of each "Part" contains a detailed index which gives page location for each service operation covered. Page numbers are consecutive in each "Part."

To make reference easier, information has been broken down into smaller units so that essentially there is now one "Part" for each component or system. Group numbers indicate the volume in which the group may be found.

Example: 11 – 02 – 21

Volume 1 – Group 11 – Part 02 – Page 21

The descriptions and specifications in this manual were in effect at the time this manual was approved for printing. Ford Marketing Corporation reserves the right to discontinue models at any time, or change specifications or design, without notice and without incurring obligation.

Ford Service Publications

Identification Codes

GROUP 30

PART 30-03 Truck Identification Codes

The Vehicle Certification Label (V.C. Label) is attached to the rear face of the driver's door. The upper half of the label contains the name of the manufacturer, the month and year of manufacture and the certification statement. The V.C. Label also contains the Vehicle Identification Number.

The remaining information codes on the V.C. Label are the same as the Truck Rating Plate Codes (Fig. 1). Vehicle codes shown on the Truck Rating Plate are explained in the following paragraphs.

RATING PLATE

Figure 1 illustrates a typical truck Rating Plate. On light and medium cowl and windshield vehicles, the Rating Plate is mounted on the right side of the cowl top panel under the hood. On stripped Parcel Delivery vehicles, the rating plate is placed in an envelope and included in the Boxed Items parts. On Bronco models, the plate is mounted on the inside panel of the glove compartment door. On all other vehicles, the Rating Plate is mounted on the rear face of the left front door.

VEHICLE IDENTIFICATION NUMBER

The identification number is the first line of numbers and letters appearing on the Rating Plate (Fig. 1). The first letter and two numbers indicate the truck model and series (the letter prefix identifies the type of body or cab and the numbers are the first two numbers of a truck series). The letter following the truck series code designates the engine identification code. The letter following the engine identification code indicates the assembly plant at which the vehicle was built. The remaining numbers indicate the consecutive unit number. The charts that follow list the various vehicle identification number codes.

VEHICLE DATA

The Vehicle Data appears on the Rating Plate on the two lines following the identification number. The first three digits under **W.B. designate the wheelbase in inches. The one or two letters under COLOR** identify the exterior paint color (two letters

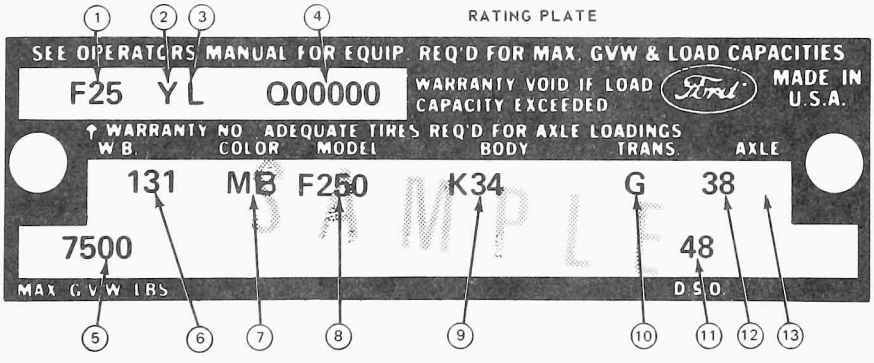



VEHICLE CERTIFICATION LABEL

1. TRUCK SERIES CODE
2. ENGINE CODE
3. ASSEMBLY PLANT CODE
4. CONSECUTIVE UNIT NO.
5. RECOMMENDED MAX. GROSS VEHICLE WEIGHT
6. WHEELBASE
7. EXTERIOR PAINT CODES
8. MODEL CODE
9. BRONCO, ECONOLINE AND 100-6000 – TRIM CODE; 700-9000 SERIES – FIRST CHARACTER IS CAB TRIM, SECOND IS SEAT TYPE, AND THIRD IS BODY CODE
10. TRANSMISSION CODES
11. DISTRICT/SPECIAL ORDER CODES
12. REAR AXLE CODES
13. FRONT AXLE CODES (IF SO EQUIPPED)

W1017-F

designate a two-tone). The letter and three digits under **MODEL** designate the truck model within a series. The letter and numerals under **BODY** designate the interior trim and body type (the letter identifies the interior trim scheme and the numerals identify the body or cab type). The transmission installed in the vehicle is identified under **TRANS** by either a numeric or alphabetical code (if two symbols appear, the first identifies the auxiliary transmission, if so equipped, and the second symbol identifies the main transmission). A letter and a number or two numbers under **AXLE** identify the rear axle ratio (when required, a letter is also stamped behind the rear axle code to identify the front axle capacity). The maximum gross vehicle weight in pounds is stamped under**MAX. G.V.W. A two-digit number is stamped under** D.S.O. **to identify the district which ordered the vehicle. If the vehicle is built to special order (Domestic Special Order, Foreign Special Order, Limited Production Option, or other special order), the complete order number will also appear under** D.S.O. The charts that follow list the various vehicle data codes.

MODEL DESIGNATION (FIRST 3 CODE SYMBOLS – WARRANTY SERIAL NO. LINE)

U	Bronco	
	Basic Series	
U-14	U-100 (Pickup) 4 x 4	
U-15	U-100 (Wagon) 4 x 4	
E	Econoline	
	Basic Series	
	100 Series	
E-11	E-100 Club Wagon	
E-12	E-100 Custom Club Wagon	
E-13	E-100 Chateau Wagon	
E-14	E-100 Regular Van	
E-15	E-100 Window Van	
E-16	E-100 Display Van	
	200 Series	
E-21	E-200 Club Wagon	
E-22	E-200 Custom Club Wagon	
E-23	E-200 Chateau Wagon	
E-24	E-200 Regular Van	
E-25	E-200 Window Van	
E-26	E-200 Display Van	
	Bus Models	
E-27	E-200 Standard	
E-28	E-200 Custom	
E-29	E-200 Chateau	
E-30	Camper	
	300 Series	
E-31	E-300 Club Wagon	
E-32	E-300 Custom Club Wagon	
E-33	E-300 Chateau Wagon	
E-34	E-300 Regular Van	
E-35	E-300 Window Van	
E-36	E-300 Display Van	
	Bus Models	
E-37	E-300 Standard	
E-38	E-300 Custom	
E-39	Chateau	
V-80	LTS 800	(Gas)
V-90	LTS 900	

F		Conventional	(Gas)
K		Conventional	(Diesel)
	Chassis		
Pick-up	Cab	Basic Series	
F-10	F-17	F-100	
F-11	F-18	F-100 4 x 4	
F-25	F-27	F-250	
F-26	F-28	F-250 4 x 4	
F-35	F-37	F-350	
F-50		F-500	
F-60		F-600	
F-61		F-600	
F-65, F-66		F-600 4 x 4	
K-60		F-6000	(Diesel)
K-61		F-6000	(Diesel)
K-70		F-7000	(Diesel)
B		Bus	(Gas)
J		Bus	(Diesel)
B-50		B-500	
B-60		B-600	
B-61		B-600	
B-70		B-700	
B-75		B-750	
J-70		B-7000	(Diesel)
P		Parcel	(Gas)
G		Parcel	(Diesel)
P-35		P-350	
P-40		P-400	
P-50		P-500	
P-60		P-600	(DSO)
G-50		P-5000 (DSO)	(Diesel)
		Motor Home	(Gas)
M-35		M-350	(DSO)
M-40		M-400	(DSO)
M-50		M-500	(DSO)
Y-80		LTS 8000	(Diesel)
Y-90		LTS 9000	

F-70	F-700	
F-75	F-750	
F-80	L-800	
F-81	L-800	
F-90	L-900	
K-80	L-8000	(Diesel)
K-81	L-8000	
K-90	L-9000	
N-60	LN-600	
N-61	LN-600	
N-70	LN-700	(Gas)
N-75	LN-750	
N-80	LN-800	
N-90	LN-900	
R-60	LN-6000	
R-61	LN-6000	
R-70	LN-7000	(Diesel)
R-80	LN-8000	
R-81	LN-8000	
R-90	LN-9000	
S-80	LNT-800	
S-90	LNT-900	(Gas)
W-90	LNT-8000	
W-90	LNT-9000	(Diesel)
C-60	C-600	
C-61	C-600	
C-70	C-700	(Gas)
C-75, C-76	C-750	
C-80	C-800	
C-90	C-900	
D-60	C-6000	
D-70	C-7000	(Diesel)
D-80	C-8000	
T-80	LT-800	
T-90	LT-900	(Gas)
U-80	LT-8000	
U-90	LT-9000	(Diesel)
L-80	CT-800	
L-90	CT-900	(Gas)
Q-80	CT-8000	(Diesel)
Z-90	W-9000	
X-90	WT-9000	(Diesel)

ENGINE CODES BRONCO-ECONO-CLUB WAGONS-PARCEL-SCHOOL BUS-LT & MED TRUCKS

Code		CID Engine	Cyl.
	Gas (Bronco)		
T		200-1V	6
G		302-2V	8
	Gas (Econoline)		
A		240-1V	6
G		302-2V	8
	Gas (F100-250-350)		
A		240-1V	6
B		300-1V	6
G		302-2V	8
Y		360-2V	8
H		390-2V	8
	Gas		
B		300-1V	6
B	(600 Series)	300-1V H.D.	6
C		330-2V	8
D		330-2V H.D.	8
E		361-2V	8
	Diesel		
U		522 (V 150)	8
W		380	6
	Gas (Parcel Delivery)		
A		240-1V	6
B		300-1V	6
	Diesel (Detroit)		
K		353N	3 (DSO)
	Gas (Low Compression Export)		
1		240-1V	6
2		300-1V H.D.	6
3		302-2V	8
4		330-2V H.D.	8
8		360-2V	8
5		361-2V	8

Heavy and Extra Heavy Truck-Series 700 through 9000
LN 500-9000 and C-500-900

Code	Cylinders	Engine C.I.D.	
A	6	240-1V	
B	6	300-1V	
C	8	330-2V M.D.	
D	8	330-2V H.D.	Gas

Heavy and Extra Heavy Truck-Series 700 Through 9000
LN-500-9000 and C-500-900

Code	Cylinders	Engine C.I.D.	
E	8	361-2V	
F	8	391-4V	
H	8	401-4V	
K	8	477-4V	Gas
L	8	534-4V	
U	8	330-2V H.D.	Liquid Propane
W	8	361-2V	
9	8	534-4V	Gas (DSO)
X	8	391-4V	
1	6	240-1V	
3	8	330-2V M.D.	Gas Low
4	8	330-2V H.D.	Compression
5	8	361-2V	
B		903 Cummins-V903	
C		636 Caterpillar-V8-225	
D		855 Cummins NTC-270	
E		903 Cummins-V903-270	
F		855 Cummins-NHCT-270	
G		903 Cummins V903-290	
J		855 Cummins-NHC-250	
K		855 Cummins-NHCT-270	
L		855 Cummins-NHCT-270	
M		855 Cummins-NTC-260	
N		855 Cummins NTC-280	
P		855 Cummins-NTC-300	
Q		855 Cummins-NTC-320	
R		855 Cummins-NTC-335	Diesel
T		568 Detroit 8V-71N	
U		522 Caterpillar V8-150	
V		522 Caterpillar V8-175	
W		855 Cummins-NTC-290	
X		927 Cummins-N927	
Y		927 Cummins-N927	
Z		927 Cummins-N927	
1		855 Cummins-NH-230	
2		426 Detroit 6-71N	
3		638 Caterpillar 1674	
4		573 Caterpillar-V8-200	
5		855 Cummins NHCT-270	
6		568 Detroit 8V-71N	
7		568 Detroit 8V-71NE	
8		318 Detroit 6V-53N	
9		555 Cummins V-8	
0		855 Cummins NTC-350	

CONSECUTIVE UNIT SERIAL NUMBERS

1972 CALENDAR YEAR PRODUCTION

Month	Through 600 Series	Heavy-Extra Heavy Series
August	Q00,000–Q09,999	Q10,000–Q19,999
September	Q20,000–Q29,999	Q30,000–Q39,999
October	Q40,000–Q49,999	Q50,000–Q59,999
November	Q60,000–Q69,999	Q70,000–Q79,999
December	Q80,000–Q89,999	Q90,000–Q99,999

1973 CALENDAR YEAR PRODUCTION

Month	Through 600 Series	Heavy-Extra Heavy Series
January	R00,000–R09,999	R10,000–R19,999
February	R20,000–R29,999	R30,000–R39,999
March	R40,000–R49,999	R50,000–R59,999
April	R60,000–R69,999	R70,000–R79,999
May	R80,000–R89,999	R90,999–R99,999
June	S00,000–S09,999	S10,000–S19,999
July	S20,000–S29,999	S30,000–S39,999

ASSEMBLY PLANTS CODE LETTERS

Code	Assembly Plant
C	Ontario Truck
E	Mahwah
I	Highland Park
K	Kansas City
L	Michigan Truck

ASSEMBLY PLANTS CODE LETTERS

Code	Assembly Plant
N	Norfolk
P	Twin Cities
R	San Jose
S	Allen Park
V	Kentucky Truck

AUXILIARY TRANSMISSION CODE

CODE	DESCRIPTION	CODE	DESCRIPTION
2	Spicer 5831D	5	Spicer 8341C
3	Spicer 7231B	6	Spicer 8031C
4	Spicer 7231D	8	Spicer 7041

Heavy and Extra Heavy Truck – Series 700 through 9000
LN500-9000 and C-500-900

EXTERIOR PAINT COLOR CODES

Code	Color	M-30J/M-32J Spec. No.
A	Black	1724-A
B	Lt. Blue	3429-A
C	Spec. White	1525-A
D	Lt. Yellow	3439-A
E	Med. Blue Met.	5087-HS
F	Lt. Green	5058-A
G	Chrome Yellow	1526-A
H	Med. Beige	3569-A
H	Med. Green Met.	5187-HS
J	Rangoon Red	1515-A
K	Med. Ivy Green	3150-A
L	Dk. Green	1237-A
M	White	1619-A
N	Platinum	921-A
P	Med. Green Met.	3462-HS
Q	Lt. Green	5060-A
R	Lt. Aqua	3066-A
R	Ginger Met.	5186-HS
S	Brt. Dk. Blue Met.	5094-HS
T	Red	2008-A
U	Med. Lime Met.	5021-HS
V	Dk. Green	5005-A
W	Lt. Ginger Met.	3516-HS
X	Lt. Goldenrod	3565-A
Z	Lt. Copper Met.	5035-HS
2	Maroon	3059-A
4	Brt. Lime	5027-A
6	Brt. Med. Blue	5004-A
7	Med. Blue	2098-A
8	Yellow	3341-A
9	Prime Red	M6J102-B
	Prime Gray	M6J103-B

CLUB WAGON INTERIOR TRIM CODES

13, 14, 15	Lt. Gray/Black Vinyl
23, 24, 25	Lt. Blue/Med. Blue Vinyl or Cloth and Vinyl
33, 34, 35	Lt. Ginger/Med. Ginger Vinyl or Cloth and Vinyl
43, 44, 45	Lt. Green/Med. Green Vinyl or Cloth and Vinyl

ECONOLINE INTERIOR TRIM CODES

1, 11, 12	Lt. Gray/Black Vinyl
2, 21, 22	Lt. Blue/Med. Blue Vinyl
3, 31, 32	Lt. Ginger/Med. Ginger Vinyl
4, 41, 42	Lt. Green/Med. Green Vinyl
26, 27, 28	Lt. Blue/Med. Blue Vinyl
36, 37, 38	Lt. Ginger/Med. Ginger Vinyl
46, 47, 48	Lt. Green/Med. Green Vinyl
B, B1	Lt. Blue/Med. Blue Vinyl
C, C1, C2	Lt. Ginger/Med. Ginger Vinyl
D, D1, D3	Lt. Green/Med. Green Vinyl

LIGHT AND MEDIUM TRUCK TRIM CODES

4, 4B, 43, DB, M3, MB	Black Vinyl
D, M	Black Cloth and Vinyl
2, 23, B, K3	Lt. Blue/Med. Blue Vinyl
23	Med. Blue Cloth and Vinyl
KB, SB, 2B, 2C, BB	Black with Blue Vinyl
5, 53, E, N3	Red/Dk. Red Vinyl
N, V	Dk. Red Cloth and Vinyl
5B, 5C, EB, NB, VB	Black with Red Vinyl
6, 63, F, 03	Lt. Green/Med. Green Vinyl
O, W	Med. Green Cloth and Vinyl
6B, 6C, FB, OB, WB	Black with Green Vinyl
3, 33, C, L3	Pastel Ginger Vinyl
L, T	Light and Pastel Ginger Cloth and Vinyl
3B, 3C, CB, LB, TB	Black with Ginger Vinyl

BRONCO INTERIOR TRIM CODES

3, 34	Pastel Parchment Vinyl

HEAVY TRUCK TRIM CODES

4, D, D3, DC, 43, 4C, 4A, 4B, 41, 42, D2, DB, 46, D6, 4F, DF	Black Vinyl
B2	Lt. and Med. Blue Vinyl
E2	Red and Dk. Red Vinyl
F2	Lt. Green/Med. Green Vinyl
C2	Pastel Ginger Vinyl
BB	Black with Blue Vinyl
EB	Black with Red Vinyl
FB	Black with Green Vinyl
CB	Black with Ginger Vinyl
11	Med. Gray Vinyl
11	Lt. Gray Vinyl
12, A2	Lt. and Med. Gray Vinyl
13, 1C, A3, AC, 14, 1D, A4, AD, 15, 1E, A5, AE	Med. Gray Vinyl
A2	Gray Multicolor and Lt. Gray Vinyl
G4, G5, G7, GD, GE, GG	Ginger (Saddle) Vinyl

RATING PLATE "BODY" TYPE CODE
ECONOLINE-VANS & CLUB WAGONS

CUSTOM	STANDARD	CAB/TRIM
A	1	GRAY/BLACK
B	2	BLUE
C	3	GINGER
D	4	GREEN

VAN SEATS
1 STATIONARY PASSENGER
2 FLIP PASSENGER
6 DELUXE DRIVER
7 DELUXE DRIVER & DELUXE STATIONARY PASSENGER
8 DELUXE DRIVER & FLIP PASSENGER

WAGON SEATS
3 FIRST & SECOND ROW - 5 PASSENGER
4 FIRST, SECOND & THIRD ROW - 8 PASSENGER
5 FIRST, SECOND, THIRD & FOURTH ROW - 12 PASSENGER

LIGHT & MEDIUM TRUCK – 100 Thru 6000 and Bronco

CUSTOM	RANGER	RANGER XLT	STD.	COLOR CAB/TRIM
	B	K	2	BLUE
	C	L	3	GINGER
	D	M	4	BLACK
	E	N	5	RED
	F	W	6	GREEN
	G	P	–	AVOCADO

H.D. VINYL	BRONCO REAR SEAT	STD.	SEATS
B	–	2	BENCH SEAT
C	–	3	FOAM CUSHION
–	4		BRONCO REAR SEAT

BODY TYPE	
0	PARCEL
3	FLARESIDE PICK-UP
4	STYLESIDE PICK-UP
5	PLATFORM STAKE
7	COWL
8	CHASSIS CAB
9	PLATFORM

Seat Codes – Medium and Heavy Truck				
HD Black Vinyl	Driver w/Companion	Single Driver	Full Width	Description
A	–	–	1	Bench Seat
B	–	–	2	Custom Bench Seat
–	C	3	–	L-S Unison
–	D	4	–	L-S No. 675
–	E	5	–	Bostrom Westcoaster
–	F	6	–	Bostrom T-Bar
–	G ①	7	–	National Cush-N-Aire
–	H	8	–	Bostrom Level Air

① w/Lear Siegler companion seat.

FRONT AXLE CODES
LIGHT AND MEDIUM TRUCKS

CODE			
Manual	Power		
	A	3,800	
	B	4,700	
–	J	5,000	Ford
2	K	5,500	
3	L	6,000	
4	M	7,000	
7	P	3,500	DANA 6CF HD
8	Q	3,000	DANA 44 LOCK

Medium & Heavy Trucks (Except F-B-500-600, 6000)					
CODE			CODE		
Manual	Power	Description	Manual	Power	Description
1	J	5000 lb.	7	P	12,000 lb.
2	K	5500 lb.	8	–	12,000 lb. Steer-Ease
3	L	6000 lb.	9	R	15,000 lb.
4	M	7000 lb.	–	S	16,000 lb.
5	N	9000 lb.	–	T	18,000 lb.
6	–	12,000 lb Center Point	–	U	20,000 lb.
			–	Z	DSO Front Axle

DISTRICE CODES

11	BOSTON	42	CLEVELAND	72	SAN JOSE
12	BUFFALO	43	MILWAUKEE	73	SALT LAKE CITY
13	NEW YORK	46	INDIANAPOLIS	74	SEATTLE
14	PITTSBURGH	47	CINCINNATI	75	PHOENIX
15	NEWARK	48	DETROIT	76	DENVER
16	PHILADELPHIA	52	DALLAS	83	GOVERNMENT
17	WASHINGTON	53	KANSAS CITY	84	HOME OFFICE RESERVE
21	ATLANTA	54	OMAHA	85	AMERICAN RED CROSS
22	CHARLOTTE	55	ST. LOUIS	89	TRANSPORTATION SERVICES
23	MEMPHIS	56	DAVENPORT	87	BODY COMPANY
24	JACKSONVILLE	57	HOUSTON	90's	EXPORT
28	LOUISVILLE	58	TWIN CITIES		
41	CHICAGO	71	LOS ANGELES		

FORD OF CANADA

MERCURY REGIONS		FORD REGIONS	
A1	CENTRAL	B1	CENTRAL
A2	EASTERN	B2	EASTERN
A3	ATLANTIC	B3	ATLANTIC
A4	MIDWESTERN	B4	MIDWESTERN
A6	WESTERN	B6	WESTERN
A7	PACIFIC	B7	PACIFIC
I2	EXPORT	I2	EXPORT

NOTE: EXPORT ALPHABETICAL I

TANDEM REAR AXLE CODES

Code	Description	Capacity	Ratio	Code	Description	Capacity	Ratio	Code	Description	Capacity	Ratio
AJ	Eaton 38DSC	(38,000)	4.56	ER	Eaton 38DPC	(38,000)	6.65	B9	Rockwell SLHD	(34,000)	7.80
BJ	Eaton 38DSC	(38,000)	4.88	FR	Eaton 38DPC	(38,000)	7.60	DA	Rockwell SQHD	(38,000)	6.17
CJ	Eaton 38DSC	(38,000)	5.57	AV	Eaton 42DPB	(44,000)	7.60	D1	Rockwell SQHD	(38,000)	4.11
FJ	Eaton 38DSC	(38,000)	4.11	CV	Eaton 42DPB	(44,000)	5.05	D2	Rockwell SQHD	(38,000)	4.44
GJ	Eaton 38DSC	(38,000)	4.33	DV	Eaton 42DPB	(44,000)	5.91	D3	Rockwell SQHD	(38,000)	4.63
HJ	Eaton 38DSC	(38,000)	5.29	BA	Rockwell SLHD	(34,000)	3.55	D4	Rockwell SQHD	(38,000)	5.29
DJ	Eaton 38DSE		6.14	BB	Rockwell SLHD	(34,000)	8.60	D5	Rockwell SQHD	(38,000)	5.83
EJ	Eaton 38DSE		6.50	B1	Rockwell SLHD	(34,000)	4.11	D6	Rockwell SQHD	(38,000)	6.83
JJ	Eaton 38DSE	(38,000)	7.17	B2	Rockwell SLHD	(34,000)	4.44	D7	Rockwell SQHD	(38,000)	7.80
KJ	Eaton 38DSE	(38,000)	7.60	B3	Rockwell SLHD	(34,000)	4.63	D8	Rockwell SQHD	(38,000)	4.88
DN	Eaton 34DPC	(34,000)	6.21	B4	Rockwell SLHD	(34,000)	4.88	AX	Eaton 50DP	(50,000)	5.61
FN	Eaton 34DPC	(34,000)	7.60	B6	Rockwell SLHD	(34,000)	5.83	AV	Eaton 42DPB	(44,000)	7.60
AR	Eaton 38DPC	(38,000)	5.05	B7	Rockwell SLHD	(34,000)	6.17	CV	Eaton 42DPB	(44,000)	5.05
DR	Eaton 38DPC	(38,000)	6.22	B8	Rockwell SLHD	(34,000)	6.83	DV	Eaton 42DPB	(44,000)	5.91

FORD TRUCK SERIES DISIGNATIONS

Prefix	Series Numbers	Series	Prefix	Series Numbers	Series
U	100	Bronco	LNT	800 and 900	93.3" BBC Conventional Tandem-Gas
R	100 thru 300	Econoline Van	LNT	8000 and 9000	93.3" BBC Conventional Tandem-Diesel
F	100 thru 750	Conventional-Gas	C	500 thru 900	Tilt Cab-Gas
F	6000 and 7000	Conventional-Diesel	C	6000 thru 8000	Tilt Cab-Diesel
L	800 and 900	Conventional-Gas	CT	800 and 900	Tilt Cab Tandem-Gas
L	8000 and 9000	Conventional-Diesel	*CT	8000	Tilt Cab Tandem-Diesel
LT	800 and 900	Conventional Tandem-Gas	W	9000	Hi-Tilt Tractor-Diesel
LT	8000 and 9000	Conventional Tandem-Diesel	WT	9000	Hi-Tilt Tractor-Diesel
LTS	800 and 900	46" BA Conventional Tandem-Gas	B	500 thru 600	School Bus Chassis-Gas
LTS	8000 and 9000	46" BA Conventional Tandem-Diesel	P	350 thru 500	Parcel Delivery-Gas
LN	500 thru 750	95.3" BBC Conventional-Gas	*P	600	Parcel Delivery-Gas
LN	800 and 900	93.3" BBC Conventional-Gas	P	3500 thru 500	Parcel Delivery-Diesel
LN	6000 and 7000	95.3" BBC Conventional-Diesel	M	350 thru 500	Motor Home Chassis-Gas
LN	8000 and 9000	93.3" BBC Conventional-Diesel			

*Special Order

MODEL CODES AND GROSS VEHICLE WEIGHT RATING

Econoline – Club and Chateau Wagon

Club				Custom Club				Chateau			
Series	Code	Model	G.V.W.	Series	Code	Model	G.V.W.	Series	Code	Model	G.V.W.
E-100	E-110	5 Passenger	4,800	E-200	E-223	5 Passenger	5,500	E-200	E-232	8 Passenger	5,600
	E-111	5 Passenger	4,900		E-222	8 Passenger	5,600		E-233	5 Passenger	5,500
E-200	E-210	5 Passenger	5,200		E-224	8 Passenger	5,700		E-234	5 Passenger	5,700
	E-213	5 Passenger	5,500		E-226	8 Passenger	6,000		E-235	8 Passenger	6,000
	E-211	8 Passenger	5,300		E-225	5 Passenger	6,000		E-236	8 Passenger	6,000
	E-214	8 Passenger	5,700	E-300	E-321	5 Passenger	6,800	E-300	E-331	5 Passenger	6,800
	E-212	5 Passenger	5,400		E-324	8 Passenger	6,800		E-334	8 Passenger	6,800
	E-212	8 Passenger	5,600		E-325	12 Passenger	6,800		E-335	12 Passenger	6,800
	E-216	8 Passenger	6,000		E-323	5 Passenger	7,600		E-333	5 Passenger	7,600
	E-215	5 Passenger	6,000		E-322	8 Passenger	7,500		E-332	8 Passenger	7,500
E-300	E-310	5 Passenger	6,500		E-326	12 Passenger	7,600		E-336	12 Passenger	7,600
	E-311	5 Passenger	6,800		E-327	12 Passenger	7,800		E-337	8 Passenger	7,800
	E-310	8 Passenger	6,500								
	E-314	8 Passenger	6,800								
	E-315	12 Passenger	6,800								
	E-313	5 Passenger	7,600								
	E-312	8 Passenger	7,500								
	E-316	12 Passenger	7,600								
	E-317	8 Passenger	7,800								

Bronco

Series	Code	Model	G.V.W.	Series	Code	Model	G.V.W.
	U-140	Pickup	4,300		U-150	Wagon	4,300
	U-141	Pickup	4,500		U-151	Wagon	4,500
	U-142	Pickup	4,900		U-152	Wagon	4,900

ECONOLINE MODEL CODES – VAN

Series	Code	Model	G.V.W.
E-100	E-140	Van	4,325
	E-141	Van	4,600
	E-142	Van	4,800
	E-150	Window	4,325
	E-151	Window	4,600
	E-152	Window	4,800
	E-160	Display	4,325
	E-161	Display	4,600
	E-162	Display	4,800
E-200	E-240	Van	5,250
	E-241	Van	5,450
	E-242	Van	6,000
	E-250	Window	5,250
	E-251	Window	5,450
	E-252	Window	6,000
	E-260	Display	5,250
	E-261	Display	5,450
	E-262	Display	6,000
E-300	E-340	Van	6,050
	E-341	Van	6,200
	E-342	Van	6,800
	E-343	Van	7,000
	E-344	Van	7,500
	E-345	Van	7,700
	E-346	Van	8,300
E-300 (Contd.)	E-347	Van	7,500
	E-348	Van	7,700
	E-350	Window	6,050
	E-351	Window	6,200
	E-352	Window	6,800
	E-353	Window	7,000
	E-354	Window	7,500
	E-355	Window	7,700
	E-356	Window	8,300
	E-357	Window	7,500
	E-358	Window	7,700
	E-360	Display	6,050
	E-361	Display	6,200
	E-362	Display	6,800
	E-363	Display	7,000
	E-364	Display	7,500
	E-365	Display	7,700
	E-366	Display	8,300
	E-367	Display	7,500
	E-368	Display	7,700
	E-300	Cutaway Camper	8,300
	E-371	Parcel Delivery	8,300
	E-372	Parcel Delivery	8,300
	E-381	Parcel Delivery	8,300
	E-382	Parcel Delivery	8,300

LIGHT & MEDIUM TRUCK MODEL CODES AND GROSS VEHICLE WEIGHT

Series	Pickups	Chassis Cab	GVW
F-100 - 4 x 2	F-100	F-170	4,550
	F-101	F-171	4,650
	F-102	F-172	4,800
	F-103	F-173	5,000
	F-104	F-174	5,450
	F-105	F-175	5,500
	F-106	F-176	5,500
F-100 - 4 x 4	F-110	F-180	5,200
	F-111	F-181	5,600
	F-112	F-182	5,200
	F-113	F-183	5,600
F-250 - 4 x 2	F-250	F-270	6,200
	F-251	F-271	6,900
	F-252	F-272	7,500
	F-253	F-273	8,100
	F-254	F-274	8,300
F-250 - 4 x 2	F-255	F-275	7,500
	F-256	F-276	8,100
F-250 - 4 x 4	F-260	F-280	6,500
	F-261	F-281	7,100
	F-262	F-282	7,700
	F-263	F-283	7,100
	F-264	F-284	7,700
F-350 4 x 2	F-350	F-370	6,600
	F-351	F-371	8,000
	F-352	F-372	8,300
	F-353	F-373	9,000
	F-354	F-374	10,000
	F-355	F-375	8,350
	F-356	F-376	9,500
	F-357	F-377	9,000
	F-358	F-378	9,500
	F-359	F-379	10,000

Series	Model Code	GVW
F-500	F-500	14,000
	F-501	16,000
	F-502	17,400
	F-503	19,200
F-600	F-600	16,000
	F-601	17,000
	F-602	19,000
	F-610	19,700
	F-611	20,200
	F-612	21,000
	F-613	22,000
	F-614	22,000
	F-615	23,000
	F-616	24,000
	F-617	22,000
	F-618	17,900
F-600 4 x 4	F-650	17,200
	F-660	21,000
	F-661	24,000
F-6000 - Diesel	K-600	16,000
	K-601	17,000
	K-602	19,200
	K-610	19,700

Series	Model Code	GVW
F-6000 - Diesel	K-611	20,200
	K-612	21,000
	K-613	22,000
	K-614	22,000
	K-615	23,000
	K-616	24,000
	K-617	22,000
B-500 - Bus	B-500	14,000
	B-501	16,000
	B-502	17,400
	B-503	19,200
B-600 - Bus	B-600	16,000
	B-601	17,000
	B-602	19,200
	B-610	19,700
	B-611	20,200
	B-612	21,000
	B-613	21,000
	B-614	22,000
	B-615	22,000
	B-616	23,000
	B-617	24,000
	B-618	17,900

Series	Model Code	GVW
P-350 - Parcel	P-350	8,000
	P-351	6,100
	P-352	6,500
	P-353	8,000
P-400 - Parcel	P-400	10,000
	P-401	7,400
	P-402	8,000
	P-403	7,000
P-500 - Parcel	P-500	15,000
	P-501	10,100
	P-502	15,000
	P-503	12,000
DSO P-600 - Parcel	P-600	17,000
	P-601	15,000
	P-602	15,000
	P-603	17,000
DSO P-5000 - Parcel Diesel	G-504	12,000
	G-506	15,000

DSO Motor Home		
M-500	M-502	12,000
	M-504	15,000
	M-505	12,800

CW1175-D

TRUCK SERIES CODE, MODEL CODE, RECOMMENDED GROSS VEHICLE WEIGHT
HEAVY AND EXTRA HEAVY TRUCK

SERIES	MODEL CODE	GVW (lbs.)
N-600	N-604	16,000
	N-605	19,200
	N-610	21,000
	N-611	22,000
	N-612	23,000
	N-615	24,000
	N-618	17,900
	N-619	20,200
	N-620	22,000
	N-621	22,000
C600	C-602	17,500
	C-611	22,000
	C-612	23,000
	C-616	20,200
	C-617	21,200
N-6000	R-602	16,000
	R-603	19,200
	R-610	21,000
	R-611	22,000
	R-612	23,000
	R-613	23,000
	R-615	24,000
	R-616	20,200
	R-617	22,000
	R-618	22,000
C-6000	D-602	17,500
	D-611	22,000
	D-612	23,000
	D-615	20,200
	D-616	21,200
F-7000	K-700	19,200
	K-701	21,000
	K-702	22,000
	K-703	23,000
	K-704	24,000
	K-705	24,000
	K-706	25,500
	K-707	27,500
	K-708	22,000
N-7000	R-700	22,000
	R-702	23,000
	R-703	24,000
	R-704	25,500
	R-707	27,500
	R-709	19,200
	R-710	21,000
	R-711	22,000
	R-712	24,000
C-7000	D-702	25,500
	D-705	27,500
	D-707	21,200
	D-708	23,000
F-700	F-700	19,200
	F-701	21,000
	F-702	22,000
	F-703	23,000
	F-704	24,000
	F-705	24,000
	F-706	25,500
	F-707	22,000

SERIES	MODEL CODE	GVW (lbs.)
N-700	N-703	24,000
	N-704	25,500
	N-709	19,200
	N-710	21,000
	N-711	22,000
	N-712	24,000
	N-752	23,000
	N-753	24,000
	N-754	25,500
	N-760	27,500
	N-762	21,500
	N-763	22,000
	N-764	22,000
	N-765	24,000
C-700	C-702	25,500
	C-706	21,200
	C-707	23,000
F-750	F-750	21,500
	F-751	22,200
	F-752	23,000
	F-753	24,000
	F-754	24,000
	F-755	25,500
	F-756	27,500
	F-757	21,500
	F-758	22,000
C-750	C-752	25,500
	C-755	27,500
	C-756	23,000
L-800	F-802	24,500
	F-803	25,500
	F-804	27,500
	F-805	29,000
	F-806	31,000
	F-808	34,000
	F-809	31,000
	F-810	22,100
	F-811	31,800
	F-812	22,100
	F-813	31,800
	F-814	34,000
LN-800	N-802	24,500
	N-803	25,500
	N-804	27,500
	N-805	29,000
	N-806	31,000
	N-808	34,000
	N-811	31,000
	N-812	22,100
	N-813	31,800
	N-814	22,100
	N-815	31,800
	N-816	34,000
C-800	C-802	27,500
	C-807	25,100
LT-800	T-800	37,000
	T-802	39,000
	T-804	43,000
	T-806	46,000
	T-807	50,000

SERIES	MODEL CODE	GVW (lbs.)
LT-800	T-811	41,000
	T-812	44,800
	T-880	39,000
	T-881	41,000
	T-882	43,000
	T-883	44,800
	T-884	46,000
	T-885	41,000
LTS-800	V-800	39,000
	V-804	46,000
	V-805	50,000
	V-809	41,000
	V-110	44,000
NT-800	S-800	37,000
	S-802	39,000
	S-804	43,000
	S-806	46,000
	S-807	50,000
	S-811	41,000
	S-812	44,800
	S-880	39,000
	S-881	41,000
	S-882	43,000
	S-883	44,800
	S-884	46,000
	S-885	41,000
CT-800	L-800	43,000
	L-802	39,000
	L-806	42,000
	L-807	46,000
	L-808	47,100
L-8000	K-802	25,500
	K-803	27,500
	K-805	31,000
	K-806	32,000
	K-807	34,000
	K-808	35,000
	K-809	31,000
	K-812	23,100
	K-813	31,800
N-8000	R-802	25,500
	R-803	27,500
	R-805	31,000
	R-806	32,000
	R-807	34,000
	R-808	35,000
	R-810	23,100
	R-811	31,800
C-8000	D-802	27,500
	D-806	25,100
	D-807	32,000
	D-808	35,000
LT-8000	U-800	39,000
	U-805	46,000
	U-806	50,000
	U-807	50,000
	U-808	54,000
	U-809	60,000
	U-815	41,000
	U-816	44,800
	U-817	61,000

CW1176-C

TRUCK SERIES CODE, MODEL CODE, RECOMMENDED GROSS VEHICLE WEIGHT
HEAVY AND EXTRA HEAVY TRUCK

SERIES	MODEL CODE	GVW (lbs.)
LTS-8000	Y-800	39,000
	Y-804	46,000
	Y-805	50,000
	Y-806	50,000
	Y-807	52,000
	Y-808	54,000
	Y-809	56,000
	Y-810	56,000
	Y-811	58,000
	Y-812	60,000
	Y-814	64,000
	Y-818	41,000
NT-8000	W-800	39,000
	W-805	46,000
	W-806	50,000
	W-807	50,000
	W-808	54,000
	W-812	41,000
	W-814	44,800
CT-8000	Q-800	43,000
	Q-802	39,000
	Q-803	45,000
	Q-805	41,000
	Q-807	46,000
	Q-808	47,100
L-900	F-900	25,500
	F-902	27,500
	F-905	31,000
	F-906	32,000
	F-907	33,000
	F-908	34,000
	F-909	35,000
	F-912	23,100
	F-913	31,800
	F-914	31,000
N-900	N-900	25,500
	N-902	27,500
	N-905	31,000
	N-906	32,000
	N-908	34,000
	N-909	35,000
	N-911	23,100
C-900	C-904	27,500
	C-906	31,000
	C-907	32,000
	C-910	34,000
	C-912	36,000
	C-913	31,000
	C-914	25,100
LT-900	T-900	39,000
	T-902	41,000
	T-904	43,000
	T-906	46,000
	T-907	50,000
	T-908	50,000
	T-909	54,000
LT-900	T-910	56,000
	T-911	60,000
	T-914	44,800
	T-915	48,000
	T-916	52,000
	T-917	58,000
LTS-900	V-900	39,000
	V-904	46,000
	V-905	50,000
	V-906	50,000
	V-907	52,000
	V-908	54,000
	V-909	56,000
	V-911	58,000
	V-912	60,000
	V-913	62,000
	V-914	64,000
	V-917	39,000
	V-918	41,000
	V-919	54,000
	V-920	48,000
NT-900	S-900	39,000
	S-902	41,000
	S-904	43,000
	S-906	46,000
	S-907	50,000
	S-909	54,000
	S-914	44,800
	S-915	48,000
	S-916	52,000
CT-900	L-900	39,000
	L-913	42,000
	L-914	46,000
	L-915	47,100
	L-916	50,000
	L-917	51,000
L-9000	K-902	32,000
	K-904	35,000
	K-907	28,000
	K-908	31,800
L-9000	R-902	32,000
	R-904	35,000
	R-906	28,000
	R-907	31,800
W-9000	Z-903	36,000
	Z-904	29,900
	Z-905	35,000
	Z-906	36,000
	Z-907	29,640
LT-9000	U-900	43,000
	U-903	46,000
	U-904	50,000
	U-905	50,000
	U-908	60,000
	U-911	52,000
LT-9000	U-911	52,000
	U-914	44,800
	U-915	61,000
	U-916	48,000
	U-917	58,000
LTS-9000	Y-900	43,000
	Y-903	50,000
	Y-904	50,000
	Y-905	52,000
	Y-906	54,000
	Y-907	56,000
	Y-908	56,000
	Y-909	58,000
	Y-910	60,000
	Y-911	62,000
	Y-918	70,000
	Y-919	48,000
NT-9000	W-903	46,000
	W-904	50,000
	W-906	54,000
	W-907	43,000
	W-911	44,800
	W-912	48,000
	W-913	52,000
WT-9000	X-905	44,800
	X-906	46,000
	X-907	46,000
	X-908	47,100
	X-909	44,600
	X-915	44,800
	X-916	46,000
	X-917	46,000
	X-918	47,100
	X-919	44,600
B-700	B-700	19,700
	B-701	21,000
	B-703	22,000
	B-704	23,000
	B-705	24,000
	B-706	24,000
	B-707	25,500
	B-708	22,000
B-7000	J-700	20,200
	J-701	22,000
	J-702	23,000
	J-703	24,000
	J-704	24,000
	J-705	25,500
	J-706	22,000
B-750	B-750	21,500
	B-751	22,000
	B-752	23,000
	B-753	24,000
	B-754	24,000
	B-755	25,500
	B-756	22,200

CW1177-C

REAR AXLE CODE (2780-lb. to 7400-lb. Capacity)

Code	Description	Ratio	Code	Description	Ratio	Code	Description	Ratio
A2	Ford 3300 ①	3.70	04	Ford 2780	4.57	24	Dana 60 (5300)	4.10
A3	Ford 2780 ①	4.11	05	Ford 3300	4.11	25	Dana 60 (5300)	4.56
A5	Ford 3300 ①	4.11	08	Ford 3300	3.50	27	Dana 70 (7400)	4.10
B4	Dana 60 ① (5200)	4.10	09	Ford 3300	3.70	28	Dana 70 (7400)	4.56
B8	Ford 2780 ①	3.50	10	Ford 3050	3.25	71	Dana 60 (5050)	3.54
B9	Ford 3300 ①	3.50	11	Ford 3050	3.50	72	Dana 60 (5050)	3.73
C7	Dana 60 ① (5300)	3.54	12	Ford 3050	3.70	73	Dana 60 (5050)	4.10
C8	Dana 60 ① (5300)	3.73	02	Ford 3300	3.00	36	Dana 70 (7400)	3.73
D7	Dana 70 ① (7400)	4.10	17	Ford 3300	3.25	37	Dana 60 (5300)	3.54
H2	Ford 3600 ①	3.50	18	Ford 2780	3.50	38	Dana 60 (5300)	3.73
H3	Ford 3600 ①	4.09	22	Dana 70 (7400)	4.88	G1	Dana 60 ① (5050)	3.54
03	Ford 2780	4.11	23	Dana 70 (7400)	5.13	G3	Dana 60 ① (5050)	4.10

① Limited-Slip or Traction-Lok

REAR AXLE CODE (11,000-lb to 18,500-lb. Capacity)

Code	Description	Capacity	Ratio	Code	Description	Capacity	Ratio	Code	Description	Capacity	Ratio
E1	Eaton 16244	(17,500)	5.57/7.75	FQ	Eaton 17121	(18,500)	6.14	42	Rockwell D-100	(13,000)	6.20
E2	Eaton 16244	(17,500)	6.17/8.58	GQ	Eaton 17121	(18,500)	6.50	44	Rockwell D-100	(13,000)	6.80
E3	Eaton 16244	(17,500)	6.50/9.04	HQ	Eaton 17121	(18,500)	7.17	52	Rockwell H-170	(17,500)	5.86
F1	Eaton 15201	(15,000)	5.14/7.17	JQ	Eaton 17121	(18,500)	7.60	53	Rockwell H-170	(17,500)	6.14
F2	Eaton 15201	(15,000)	5.83/8.12	32	Rockwell C-100		6.20	54	Rockwell H-170	(17,500)	6.83
F3	Eaton 15201	(15,000)	6.33/8.81	34	Rockwell C-100		6.80	55	Rockwell H-170	(17,500)	7.17
EH	Eaton 17221	(18,500)	5.57/7.60	31	Rockwell C-100		5.83	62	Rockwell F-106	(15,000)	6.20
FH	Eaton 17221	(18,500)	6.14/8.38	40	Rockwell D-100		5.29	64	Rockwell F-106	(15,000)	6.80
GH	Eaton 17221	(18,500)	6.50/8.87	41	Rockwell D-100	(13,000)	5.83	66	Rockwell F-106	(15,000)	7.20
HH	Eaton 17221	(18,500)	7.17/9.77								

REAR AXLE CODE (22,000-lb and 23,000-lb. Single-Axle)

Code	Description	Capacity	Ratio	Code	Description	Capacity	Ratio	Code	Description	Capacity	Ratio
DB	Eaton 18221	(22,000)	5.57/7.60	HG	Eaton 19121	(23,000)	4.56	H3	Rockwell R-171	(23,000)	4.63
EB	Eaton 18221	(22,000)	6.14/8.38	DK	Eaton 18121	(22,000)	6.50	H4	Rockwell R-171	(23,000)	4.88
FB	Eaton 18221	(22,000)	6.50/8.87	EK	Eaton 18121	(22,000)	7.17	H5	Rockwelll R-171	(23,000)	5.29
GB	Eaton 18221	(22,000)	7.17/9.77	AP	Eaton 19221	(23,000)	4.33/5.90	H6	Rockwell R-171	(23,000)	5.86
AG	Eaton 19121	(23,000)	4.11	CP	Eaton 19221	(23,000)	5.43/7.39	H7	Rockwell R-171	(23,000)	6.14
BG	Eaton 19121	(23,000)	4.33	DP	Eaton 19221	(23,000)	6.17/8.40	H9	Rockwell R-171	(23,000)	3.70
CG	Eaton 19121	(23,000)	4.88	EP	Eaton 19221	(23,000)	6.67/9.08	1A	Rockwell R-170	(23,000)	6.42/8.38
DG	Eaton 19121	(23,000)	5.43	GP	Eaton 19221	(23,000)	4.11/5.60	2A	Rockwell R-170	(23,000)	7.09/9.07
EG	Eaton 19121	(23,000)	6.17	H1	Rockwell R-171	(23,000)	4.11	3A	Rockwell R-170	(23,000)	7.21
FG	Eaton 19121	(23,000)	6.67	H2	Rockwell R-171	(23,000)	4.33	4A	Rockwell R-170	(23,000)	4.11

TANDEM REAR AXLE CODES

Code	Description	Capacity	Ratio	Code	Description	Capacity	Ratio	Code	Description	Capacity	Ratio
EC	Eaton 30DSC	(32,000)	6.50	GF	Eaton 34DSE	(34,000)	6.14	HW	Eaton 34DET	(34,000)	7.17/9.77
FC	Eaton 30DSC	(32,000)	7.17	HF	Eaton 34DSE	(34,000)	6.50				
GC	Eaton 30DSC	(32,000)	7.60	MF	Eaton 34DSE	(34,000)	7.17				
JF	Eaton 34DSC	(34,000)	4.11	KF	Eaton 34DSE	(34,000)	7.60				
BF	Eaton 34DSC	(34,000)	4.33	LF	Eaton 34DSE	(34,000)	3.70				
CF	Eaton 34DSC	(34,000)	4.56	FW	Eaton 34DTE	(34,000)	6.1468.38				
DF	Eaton 34DSC	(34,000)	4.88	GW	Eaton 34DTE	(34,000)	6.50/8.87				

TRANSMISSION CODES

Code	Description
Bronco	
C	3 Speed Manual
Econoline–Club Wagon	
C	3 Speed Manual
G	Automatic (C4)
Light, Medium and Heavy Truck, Parcel Delivery and School Bus	
A	New Process 435 4 Speed
B	Spicer 8516
B	Spicer P8516 Overdrive
C	Ford-Manual 3 Speed
C	Fuller RT-610 10 Speed
D	Clark 387 V 5 Speed
E	Warner T-19G
E	Fuller 5 H74 5 Speed
F	Fuller 5HA74 5 Speed
F	Warner T-18 4 Speed
G	C-4 Automatic
G	Warner T-87G
H	Allison MT650
J	Fuller RTO 9513
J	FMX Automatic (Parcel)
K	Spicer 6453A 5 Speed
L	Allison AT540
M	Clark 285V 5 Speed
N	Spicer 6352 5 Speed
Ø	New Process 542FL 5 Speed

Code	Description
Light, Medium and Heavy Truck, Parcel Delivery and School Bus (Cont'd.)	
Ø	Fuller T-905B 5 Speed
P	Warner T-19 4 Speed
P	C-6 Automatic
Q	Spicer 5652 5 Speed
R	Spicer 8716
S	Spicer 5756-B 5 Speed
T	New Process 542 FO 5 Speed
T	Fuller TRO-9509 B 9 Speed
U	Spicer 6852G 5 Speed
V	Fuller RT-910
W	Spicer 6352B 5 Speed
X	Fuller T-905A 5 Speed
Y	Transmatic MT41-6 Speed
Z	Transmatic MT40-6 Speed
1	Spicer 8552A 5 Speed
1	Transmatic MT42-6 Speed
2	Clark 282V 5 Speed
3	Fuller RT-906
4	Clark 280 VO 5 Speed
5	Fuller RTO-910
6	Fuller RTO-915
7	Clark 385V 5 Speed
8	Allison MT640
9	Fuller RT-915
9	New Process 542 FD 5 Speed

CW1172-C

Charging System

GROUP 31

PART 31-01	PAGE	PART 31-21	PAGE
Charging System General Service	31-01-01	Leece-Neville Alternators	31-21-01
*PART 31-02		PART 31-40	
Batteries	31-02-01	Alternator Electro-Mechanical Regulator	31-40-01
PART 31-10		PART 31-41	
G.P.D. Rear Terminal Alternators	31-10-01	Alternator Transistorized Regulator	31-41-01

PART 31-01 Charging System General Service

COMPONENT INDEX	Page	COMPONENT INDEX	Page
DESCRIPTION AND OPERATION		TESTING (Cont.)	
Fuse Link	01-01	On-Vehicle Tests	01-02
REMOVAL AND INSTALLATION		Tests with Rotunda	
Fuse Link Replacement	01-11	ARE 20-22 Tester	01-05
TESTING		Tests with Rotunda	
Charging System	01-02	ARE 27-38 Tester	01-08
Bench Tests	01-09	Tests with a Voltmeter	01-02

DESCRIPTION AND OPERATION

CHARGING SYSTEM FUSE LINK

The fuse link used on the Bronco, Econoline, Club Wagons, Parcel Delivery and light trucks, is a short length of insulated wire integral with the engine compartment wiring harness. It is several wire gages smaller than the circuit that it protects and is the color of the circuit being supplied by the fuse link. Service fuse links are green or black depending on usage. All fuse links have a flag moulded on the wire or on the terminal insulator. Color identification of the flag or connector is Red—18 ga. wire, Orange—16 ga. wire, or Green—14 ga. wire. Fig. 1 shows the fuse link installations.

The fuse link is designed to burn out, thus protecting the alternator and wiring when heavy reverse current

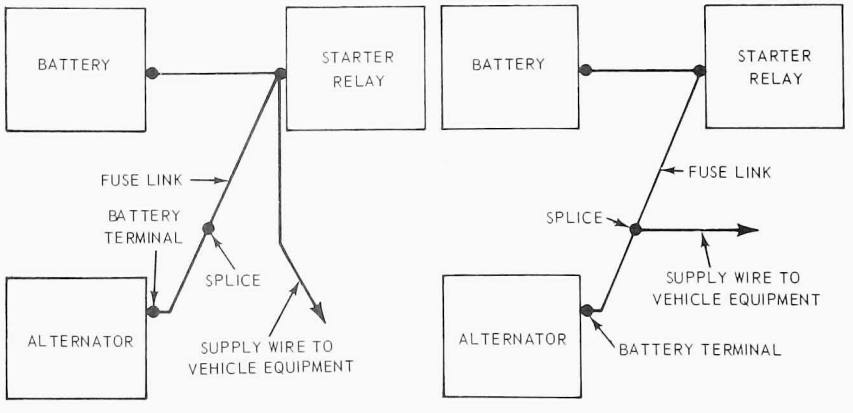

FIG. 1 Fuse Link Installations

flows, such as when a booster battery is connected incorrectly, or a short to ground occurs in the wiring harness.

A burned out link may have bare wire ends protruding from the insulation, or it may only have expanded or bubbled insulation. If it is hard to determine if the link is burned out, perform a continuity test.

TESTING

CHARGING SYSTEM

The alternator and alternator regulator are precision built units, and the equipment to make tests in the charging system must be accurate. Voltmeters must be accurate within 0.1 (one tenth) volt within the range of 12 to 16 volts and ammeters within one ampere at 30 to 90 amperes to permit correct measurement of the alternator and regulator. The meters on Rotunda equipment should be calibrated once a year and the date of calibration stamped on the meter face. It is recommended that this practice be followed by technicians with other than approved equipment in order to maintain their meters at acceptable accuracy.

Certain tests outlined in the following Parts are illustrated in schematic and in pictorial form. The schematic illustrates the internal connections of the Rotunda equipment so that these connections can be duplicated when this equipment is not available. The various circuits involved in the tests can be selected by means of switches without the necessity of changing connections when the illustrated equipment is used. This reduces the time required to test units and circuits on the vehicle.

Where applicable, the tests are divided into On The Vehicle and On The Test Bench procedures. Either procedure can be followed depending on the equipment available for the tests.

Trouble shooting or diagnosis is required before actual repairs can be made in the electrical system. Even where an obvious fault makes the replacement of a unit necessary, you must still find out why the unit failed. When a trouble is diagnosed correctly, unnecessary repairs are prevented, the time the vehicle is out of service will be decreased, and the repairs that are made will be permanent. The trouble shooting procedures given in the Truck Diagnosis Manual, Form No. FD7962-70T, will aid in making a correct diagnosis.

ON VEHICLE TESTS

Before performing charging system tests on the vehicle, note the complaint such as: slow cranking, battery dead or using an excessive amount of water, top of battery wet, ammeter shows charge at all times and/or no charge, alternator warning lamp does not come on and/or never goes out. This information will add in isolating the part of the system causing the problem. The battery must be in proper state of charge (at least 1.200 specific gravity).

VISUAL INSPECTION

1. If the vehicle is equipped with a fuse link, check the fuse link located between the starter solenoid and the alternator. Replace the fuse link if burned.
2. Check the battery posts and battery cable terminals for clean and tight connections. Remove the battery cables (if corroded), clean and install them securely.
3. Check for clean and tight wiring connections at the alternator, regulator and engine.
4. Check the alternator belt tension and tighten to specification (if necessary).

INDICATOR LIGHT-ALTERNATOR CHARGING SYSTEM

Normal Charge Indicator

With Ignition switch off .....Alternator lamp is off

With Ignition switch on (engine not running) .....Alternator lamp is on

With ignition switch on (engine running) .....Alternator lamp is off

1. If the charge indicator lamp does not come on with the ignition key in the ON position and the engine not running, check the I wiring circuit for an open circuit or burned out charge indicator lamp (ignition switch to regulator I terminal).
2. If the charge indicator light does not come on, disconnect the wiring plug connector at the regulator and connect a jumper wire from the I terminal of the regulator wiring plug to the negative battery post cable clamp.
3. The charge indicator lamp should go on with the ignition key turned to the ON position.
4. If the charge indicator bulb does not go on, check the bulb for continuity and replace (if burned out).
5. If the bulb is not burned out, an open circuit exists between the ignition switch and the regulator.

A good indication of a problem in the I wiring circuit (ignition switch to regulator I terminal) will show when the charge indicator light goes out with high engine rpm. This is caused by an open circuit in the 15 ohm resistor wire (connected in parallel with the indicator light) generally at the terminal point (either end of the resistor wire).

AMMETER-ALTERNATOR CHARGING SYSTEM

Normal Charge Indicator

With ignition switch off and no electrical load .....Ammeter should show 0 or center scale.

With ignition switch on engine running .....Needle deflects towards charge and returns toward center scale in two steps (fully charged battery).

With ignition switch off and headlamps on .....Ammeter should show between 0 and discharge scale.

Refer to the Ford Car and Truck Diagnosis Manual for diagnosis of the alternator charging system.

TESTS USING A VOLTMETER

When performing charging system tests with a voltmeter, turn OFF all lights and electrical components. Place the transmission in neutral and apply the parking brake. The battery must be charged to at least 1.200 specific gravity before starting the test.

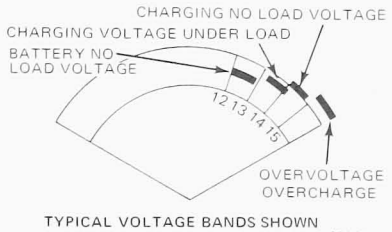

FIG. 2 Voltmeter Test Scale

Voltmeter Test Procedure

1. Connect the negative lead of the voltmeter to the negative battery cable clamp (not bolt or nut).
2. Connect the positive lead of the voltmeter to the positive battery cable clamp (not bolt or nut).
3. Record the battery voltage reading shown on the voltmeter scale.
4. Connect the red lead of a tachometer to the distributor terminal of the coil and the black tachometer lead to a good ground.
5. Then, start the engine and operate the engine at approximately 1500 rpm. With no other electrical load (foot off brake pedal and car doors closed), the voltmeter reading should increase 1 volt and not exceed 2 volts above the first recorded battery voltage reading. The reading should be taken when the voltmeter needle stops moving.
6. With the engine running, turn on the heater and/or air conditioner blower motor (high speed) and headlights on (high beam).
7. Increase the engine speed to 2000 rpm. The voltmeter should indicate a minimum of 0.5 volt above the first recorded battery voltage (Fig. 2).

If the above tests indicate proper voltage readings, the charging system is operating normally. Proceed to Test Results if a problem still exists.

Test Results

1. If the voltmeter reading indicates over voltage (more than 2.0 volts above battery voltage), stop the engine and check the ground connections between the regulator and alternator and/or regulator to engine. Clean and tighten connections securely and repeat the Voltmeter Test Procedure.
2. If over voltage condition still exists, disconnect the regulator wiring plug from the regulator and repeat the Voltmeter Test Procedure.
3. If over voltage condition disappears (voltmeter reads battery voltage), replace voltage regulator and repeat the voltmeter test procedure.
4. If over voltage still exists with the regulator wiring plug disconnected, repair the short in the wiring harness between the alternator and regulator. Then, replace the regulator and connect the regulator wiring plug to the regulator and repeat the Voltmeter Test Procedure.
5. If the voltmeter reading does not increase (one volt), check for the presence of battery voltage at the alternator BAT terminal and the regulator A terminal (Fig. 3). Repair the wiring if no voltage is present at these terminals, and repeat the Voltmeter Test Procedure.
6. If the voltmeter reading does not increase one volt above battery voltage, proceed to the next step before performing field circuit tests.
7. Before performing other tests, the field circuit (regulator plug to alternator) must be checked for a grounding condition. If the field circuit is grounded and the jumper wire is used as a check at the regulator wiring plug from the A to F terminals (Fig. 3), excessive current will cause heat damage to the regulator wiring plug terminals and may burn the jumper wire (Fig. 3). Also, if the field circuit was grounded, the connector wire inside the regulator will be burned open and an under voltage condition will result.
8. The field circuit should be checked with the regulator wiring plug disconnected and an ohmmeter connected from the F terminal of the regulator wiring plug to the battery ground. The ohmmeter should indicate between 4 and 250 ohms (Fig. 4).
9. A check for the regulator burned-open wire is made by connecting an ohmmeter from the I to F terminals of the regulator (Fig. 5). The reading should indicate 0 (no resistance). If the reading indicates approximately 10 ohms, the connector wire inside the regulator is open. The field circuit grounded condition must be found and repaired before installing a new regulator.

Field Circuit and Alternator Tests

1. If the field circuit is satisfactory, disconnect the regulator wiring plug at the regulator and connect the jumper wire from the A to the F terminals on the regulator wiring plug (Fig. 6).
2. Repeat the Voltmeter Test Procedure.
3. If the Voltmeter Test Procedure still indicates a problem (under voltage), remove the jumper wire from the regulator plug and leave the plug disconnected from the regulator. Then, connect a jumper wire to the FLD and BAT terminals on the alternator (Fig. 7).
4. Repeat the Voltmeter Test Procedure.
5. If the Voltmeter Test results are now satisfactory, repair the wiring harness from the alternator to the regulator. Then, remove the jumper wire at the alternator and connect the regulator wiring plug to the regulator.
6. Repeat the Voltmeter Test Procedure, to be sure the charging system is operating normally.
7. If the Voltmeter Test results still indicate (under voltage), repair or replace the alternator. With the jumper wire removed, connect the wiring to the alternator and regulator.
8. Repeat the Voltmeter Test Procedure.

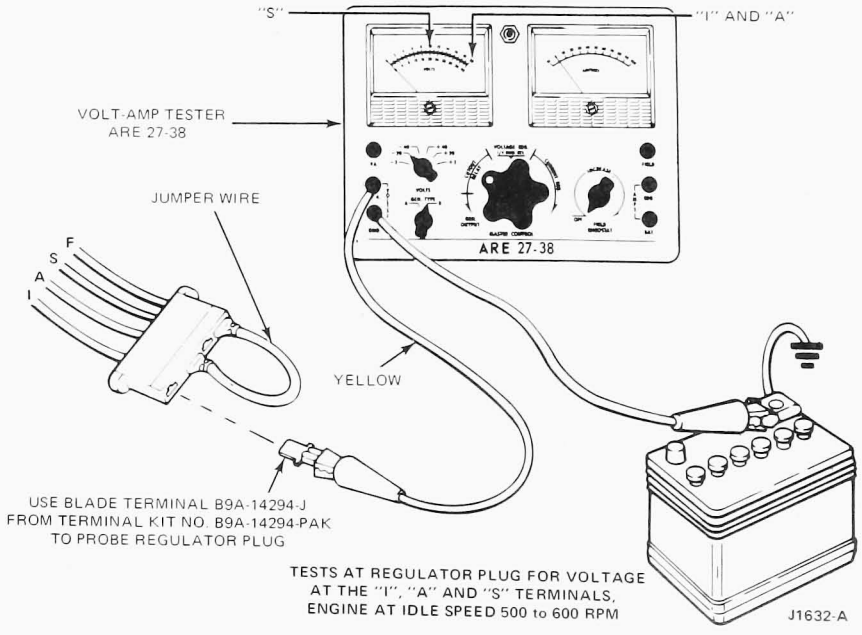

FIG. 3 Regulator Plug Voltage Tests

Regulator I and S Circuit Tests
S—Circuit With Ammeter

1. Connect the positive lead of the voltmeter to the S terminal of the regulator wiring plug (Fig. 3). Then, turn the ignition switch to the ON position. Do not start the engine.

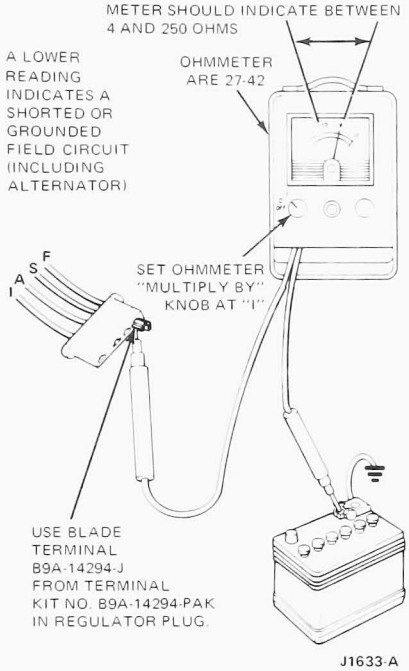

FIG. 4 Field Circuit Test

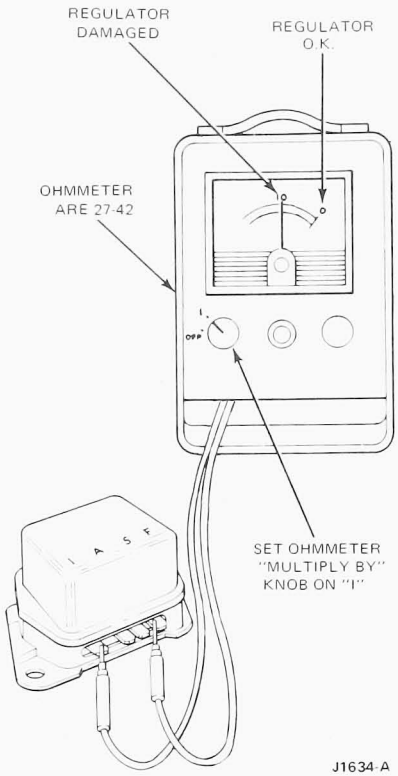

FIG. 5 Regulator Burned-Open Connector Wire Test

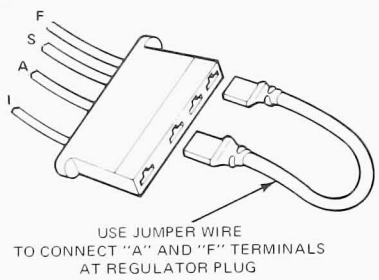

FIG. 6 Regulator Plug Jumper Wire Connections

2. The voltmeter reading should indicate battery voltage.
3. If there is no voltage reading, disconnect the positive voltmeter lead from the positive battery clamp and repair the S wire lead from the ignition switch to the regulator wiring plug.
4. Connect the positive voltmeter lead to the positive battery cable terminal and repeat the Voltmeter Test Procedure.

S and I Circuit—With Indicator Light

1. Disconnect the regulator wiring plug and install a jumper wire between the A and F terminals.

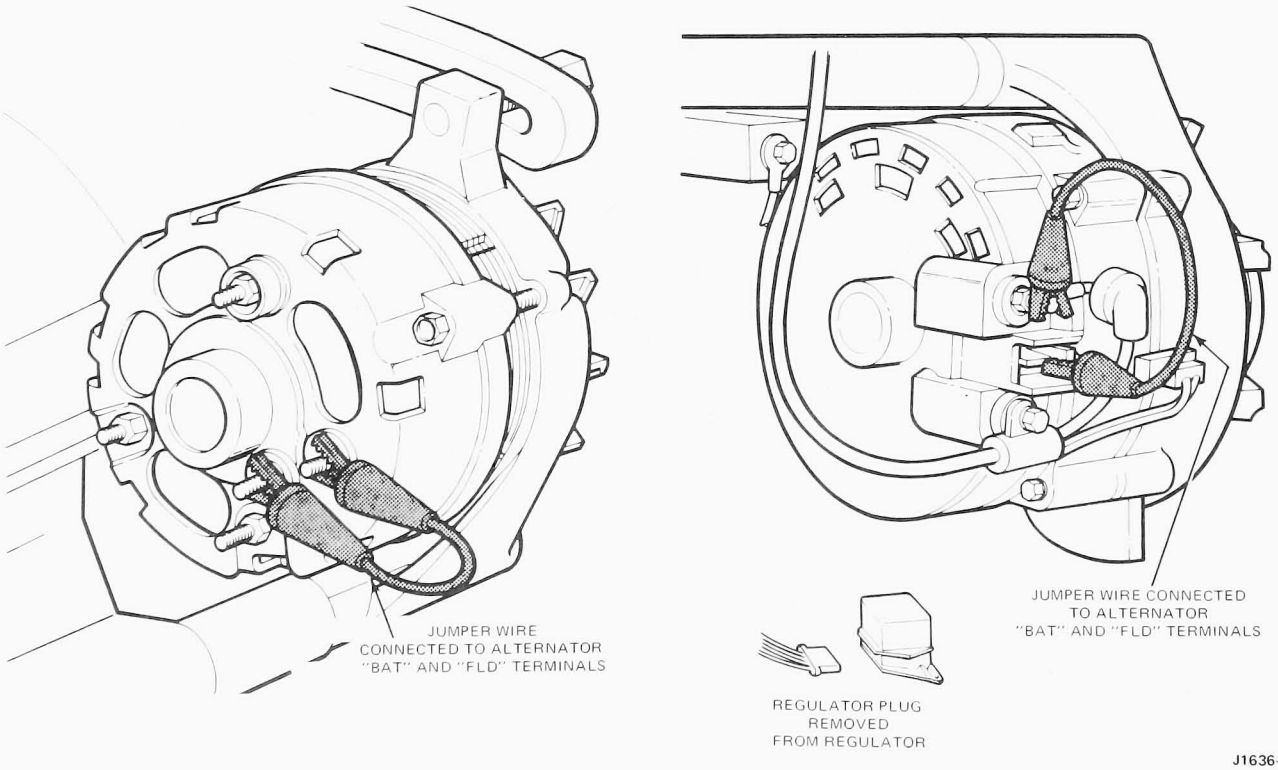

FIG. 7 Jumper Wire Connections

2. With the engine idling, connect the positive lead of the voltmeter to the S terminal and then to the I terminal of the regulator wiring plug (Fig. 3). The voltage of the S circuit should read approximately 1/2 of the I circuit.
3. If no voltage is present, repair the alternator or the wiring circuit at fault. Reconnect the positive voltmeter lead to the positive battery cable terminal and repeat the Voltmeter Test Procedure.
4. If the above voltage tests are satisfactory, install a new regulator.
5. Then, remove the jumper wire from the regulator wiring plug and connect the wiring plug to the regulator. Repeat the Voltmeter Test Procedure.

Diode Test—On Vehicle

1. Disconnect the electric choke.
2. Disconnect voltage regulator wiring plug.
3. Connect a jumper between "A" and "F" terminal of voltage regulator wiring plug.
4. Connect voltmeter to battery cable clamps.
5. Start engine -let engine run at idle.
6. Read and record voltmeter reading.
7. Move positive voltmeter lead to "S" terminal in voltage regulator wiring plug.
8. Note voltmeter reading.

Test Results

1. If voltmeter reads 1/2 of battery voltage, diodes are okay.
2. If voltmeter reads approximately 1.5 volts, alternator has shorted **negative** diode, or a grounded stator winding.
3. If voltmeter reads approximately 1.5 volts less than battery voltage, alternator has shorted **positive** diode.
4. If voltmeter reads about 1.0 to 1.5 volts less than 1/2 battery voltage, alternator has an **open positive** diode.
5. If voltmeter reads about 1.0 to 1.5 volts more than 1/2 battery voltage, alternator has an **open** negative diode.
6. Connect the electric choke into the circuit after the test is completed.

TESTS USING THE ROTUNDA ARE 20-22 ALTERNATOR REGULATOR TESTER

The general procedure is to connect the tester (Fig. 8) to the charging

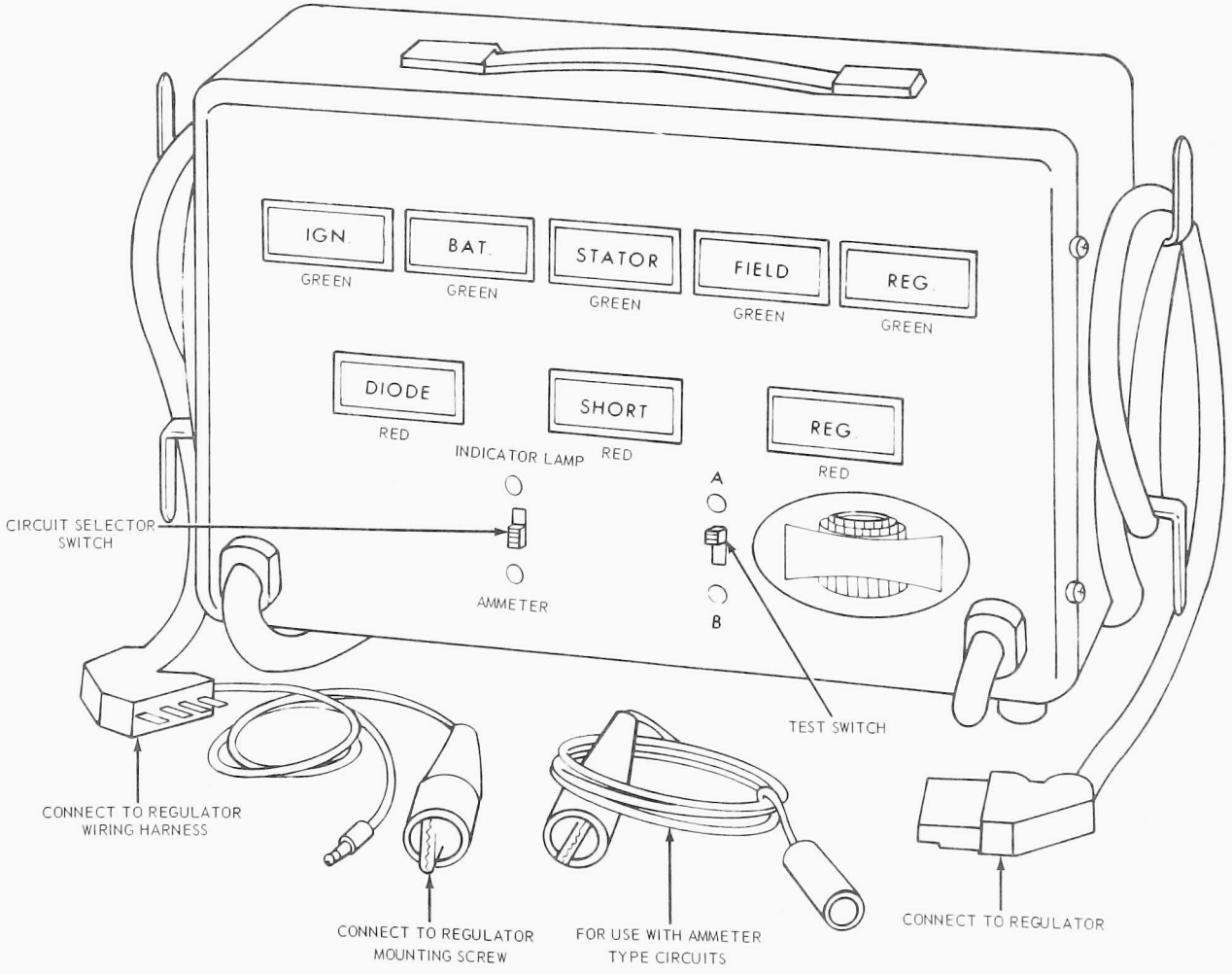

J 1398-A

FIG. 8 ARE 20-22 Tester

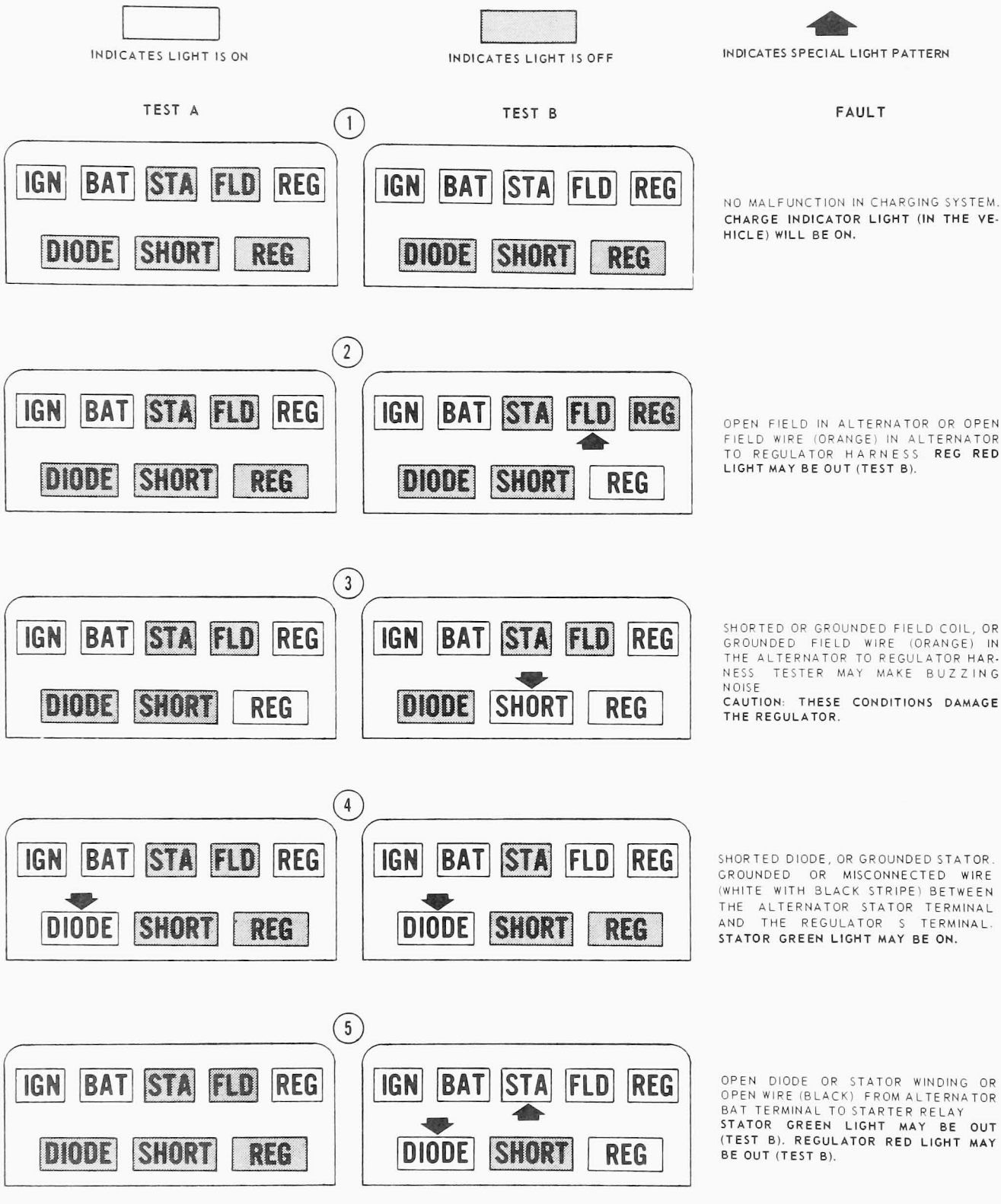

NOTE: ALWAYS REPAIR MALFUNCTION AND RETEST

J1399-D

FIG. 9 ARE 20-22 Test Chart



NOTE: ALWAYS REPAIR MALFUNCTION AND RETEST

J1400-C

FIG. 10 ARE 20-22 Test Chart (continued)

system, start the engine, make two tests, and then compare the pattern of lights that appear on the tester to each set of patterns shown in Figs. 9 and 10. Follow the instructions given with the ARE 20-22 tester.

TESTS USING THE ROTUNDA ARE 27-38 VOLT-AMP-ALTERNATOR TESTER

The following test procedures make use of the Rotunda Volt-Amp Alternator Tester ARE 27-38.

Refer to the Wiring Diagram Manual, Form 7795-P-73 for schematics and locations of wiring harness. **Use care when connecting any test equipment to the alternator system, as the alternator output terminal is connected to the battery at all times.**

Alternator Output Test On Engine

When the alternator output test is conducted off the car, a test bench must be used. Follow the procedure given by the test bench equipment manufacturer. When the alternator is removed from the vehicle for this purpose, always disconnect the battery ground cable as the alternator output connector is connected to the battery at all times.

To test the output of the alternator on the vehicle, proceed as follows:

Test Procedure

1. Check the alternator drive belt tension. Place the transmission in neutral or park and apply the parking brake. Make the connections and tester knob adjustments as shown in Fig. 11 (Output Test). Be sure that the field rheostat knob is at the OFF position at the start of this test.
2. Close the battery adapter switch. Start the engine, then open the battery adapter switch.
3. Increase the engine speed to approximately 2000 rpm (use a tachometer following the manufacturers instructions). Turn off all lights and electrical accessories.
4. Turn the field rheostat clockwise until 15 volts is indicated on the voltmeter upper scale. Turn the master control clockwise until the voltmeter indicates between 11 and 12 volts. Holding the master control in this position, turn the field rheostat clockwise to its maximum rotation. Turn the master control

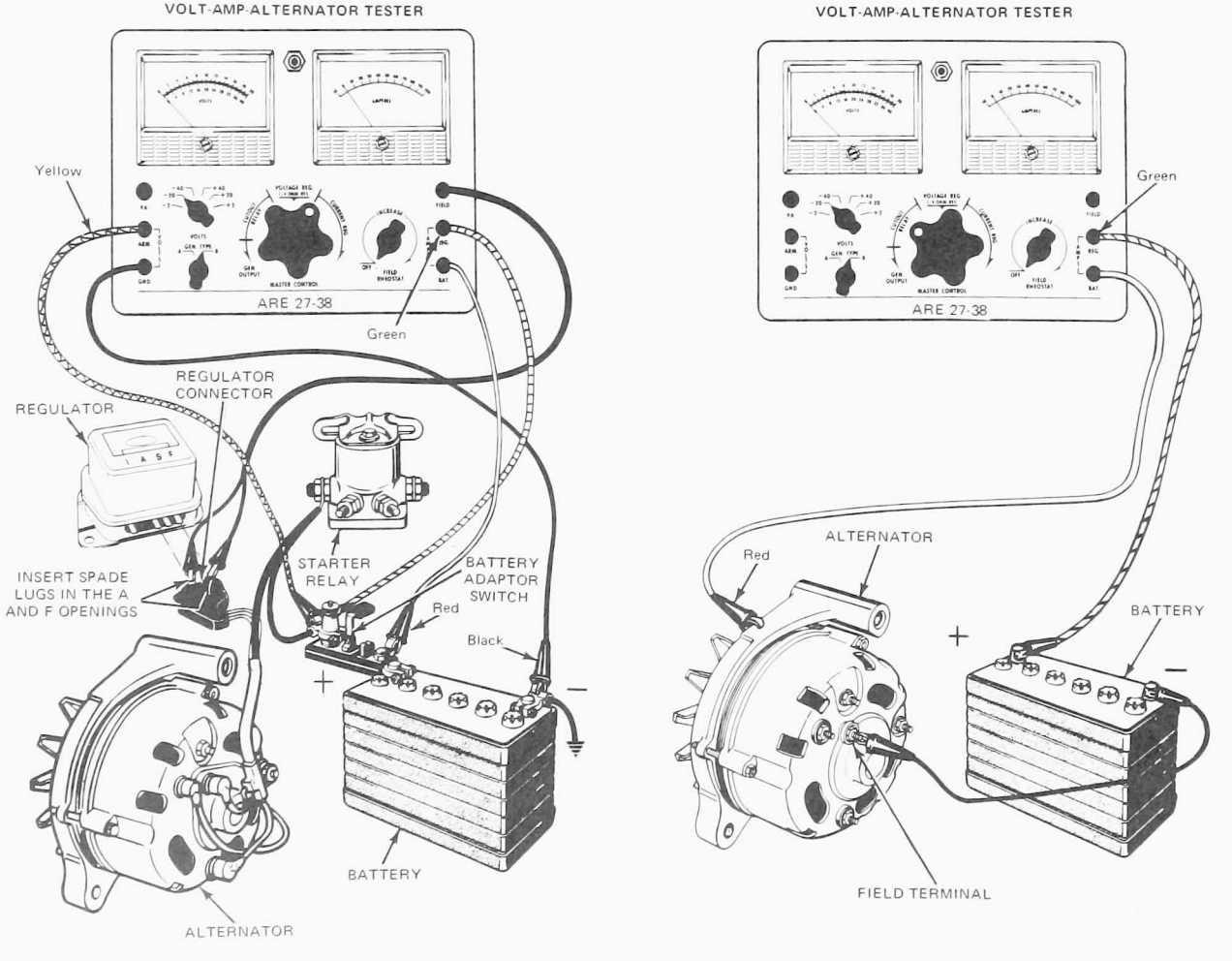

FIG. 11 Alternator Tests

counter clockwise until the voltmeter indicates 15 volts. Observe the ammeter reading. Add 2 amperes to this reading to obtain alternator output. If rated output cannot be obtained, increase the engine speed to 2900 rpm and repeat this step.

5. Return the field rheostat knob to OFF, release the master control knob, and stop the engine. Disconnect the test equipment, if no further tests are to be made.

If the alternator output is not O.K., it will be necessary to remove the alternator from the vehicle and perform the necessary bench tests to locate the problem.

An output of 2 to 5 amperes below specification usually indicates an open alternator diode. An output approximately 10 amperes below specification usually indicates a shorted alternator diode. An alternator with a shorted diode will usually whine, which will be most noticeable at idle speeds.

Stator Neutral Voltage Test—On Engine

The alternator STA terminal is connected to the stator coil neutral or center point of the alternator windings. The voltage generated at this point is used to close the field relay in the charge indicator light system.

To test for the stator neutral voltage, disconnect the regulator connector plug from the regulator. Make the connections and tester knob adjustments as shown in Fig. 12.

Start the engine and run it at 1000 rpm (use a tachometer). Turn off all lights and accessories. Rotate the field rheostat clockwise until at least 6 volts is indicated on the voltmeter upper scale. If 6 volts or more is not obtained, remove the alternator and perform the diode and stator tests to determine which part of the alternator is damaged.

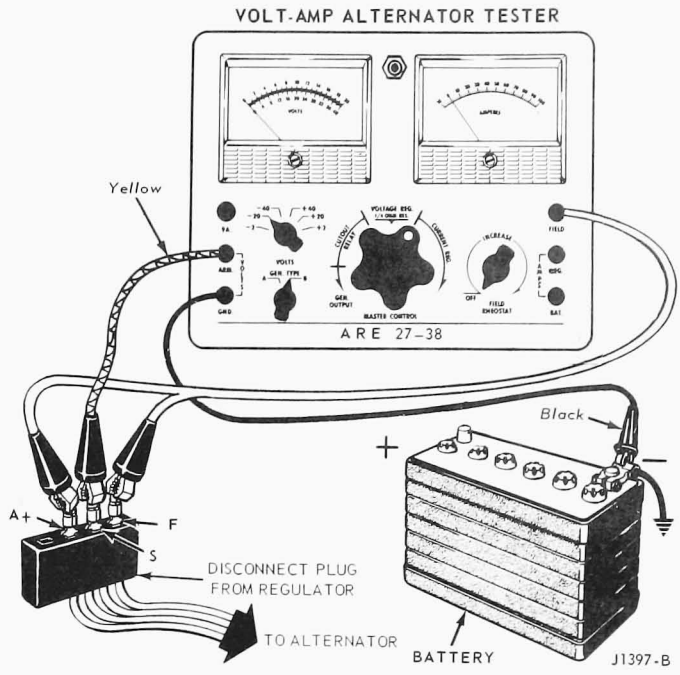

FIG. 12 Stator Neutral Voltage Test

BENCH TESTS

RECTIFIER SHORT OR GROUNDED AND STATOR GROUNDED TEST—ON BENCH

These tests are performed with an ARE 27-42 ohmmeter. Set the Multiply By knob at 10, and calibrate the ohmmeter as directed inside the instrument cover.

Contact one ohmmeter probe to the alternator BAT terminal (Fig. 13) and the other probe to the STA terminal (rear blade terminal). Then, reverse the ohmmeter probes and repeat the test. A reading of about 60 ohms should be obtained in one direction and no needle movement with the probes reversed. A reading in both directions indicates a bad positive diode, a grounded positive diode plate or a grounded BAT terminal.

Perform the same test using the STA and GND (ground) terminals of the alternator. A reading in both directions indicates either a bad negative diode, a grounded stator winding, a grounded stator terminal, a grounded positive diode plate, or a grounded BAT terminal.

Infinite readings (no needle movement) in all four probe positions in the preceeding tests indicates an open STA terminal lead connection inside the alternator.

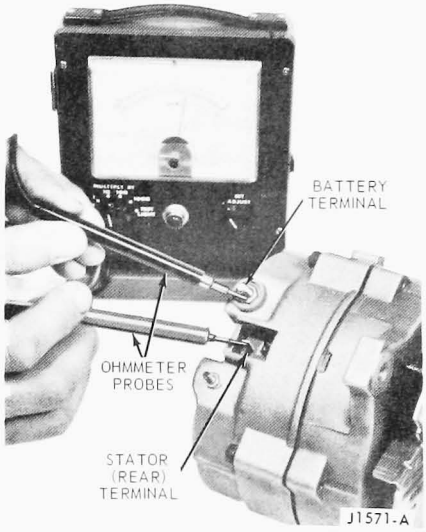

FIG. 13 Rectifier Short or Grounded and Stator Grounded Test

FIELD OPEN OR SHORT CIRCUIT TEST—ON BENCH

This test is performed with an ohmmeter (Tool ARE 27-42). Set the ohmmeter Multiply By knob at 1 and calibrate the ohmmeter as directed inside the instrument cover.

Contact the alternator field terminal with one probe and the ground terminal with the other probe (Fig. 14). Then, spin the alternator pulley. The ohmmeter reading should be between 4 and 250 ohms, and should fluctuate while the pulley is turning. An infinite reading (no meter movement) indicates an open brush lead, worn or stuck brushes, or a bad rotor assembly. An ohmmeter reading less than 4 ohms indicates a grounded brush assembly, a grounded field terminal or a bad rotor.

DIODE TEST—ON BENCH

Remove the rectifier assembly from the alternator as outlined in Section 5. Set the ohmmeter Multiply By knob at 10 and calibrate the meter as directed inside the cover.

To test one set of diodes, contact one probe to the terminal bolt as shown in Figs. 15, 16 and 17 and contact each of

the three stator lead terminals with the other probe. Reverse the probes and repeat the test. All diodes should show a low reading of about 60 ohms in one direction, and an infinite reading (no needle movement) with the probes reversed. Repeat the preceeding tests for the other set of diodes except that the other terminal screw is used.

If the meter readings are not as specified, replace the rectifier assembly.

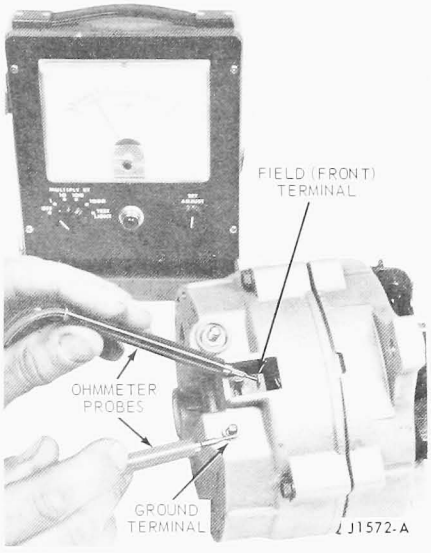

FIG. 14 Field Open or Short Circuit Test

STATOR COIL OPEN OR GROUNDED TEST—ON BENCH

These tests are made to determine if the stator coil is operating properly. Disassemble the stator from the alternator as outlined under Disassembly in Section 5.

Set the ARE 27-42 ohmmeter Multiply By knob at 1, and calibrate the meter as directed inside the cover. Connect the ohmmeter probes between each pair of stator leads (3 different ways). The ohmmeter must show equal readings for each pair of stator leads. Replace the stator if the readings are not the same.

Set the ARE 27-42 ohmmeter Multiply By knob at 1000. Connect the ohmmeter probes to one of the stator leads and to the stator laminated core. Be sure that the probe makes a good electrical connection with the stator core. The meter should show an infinite reading (no meter movement). If the meter does not indicate an infinite reading (needle moves), the stator winding is shorted to the core and must be replaced. Repeat this test for each of the stator leads.

ROTOR OPEN OR SHORT CIRCUIT TEST—ON BENCH

Disassemble the front housing and rotor from the rear housing and stator as outlined under Disassembly in Section 5. Set the ohmmeter (ARE 27-42) Multiply By knob at 1 and calibrate the meter as directed inside the ohmmeter cover.

Contact each ohmmeter probe to a rotor slip ring. The meter reading should be 4 or 5 ohms. A higher reading indicates a damaged slip ring solder connection or a broken wire. A lower reading indicates a shorted wire or slip ring. Replace the rotor if it is damaged and cannot be repaired.

Contact one ohmmeter probe to a slip ring and the other probe to the rotor shaft. The meter reading should be infinite (no deflection). A reading other than infinite indicates the rotor is shorted to the shaft. Inspect the slip ring soldered terminals to be sure they are not bent and touching the rotor shaft, or that excess solder is grounding the rotor coil connections to the shaft. Replace the rotor if it is shorted and cannot be repaired.

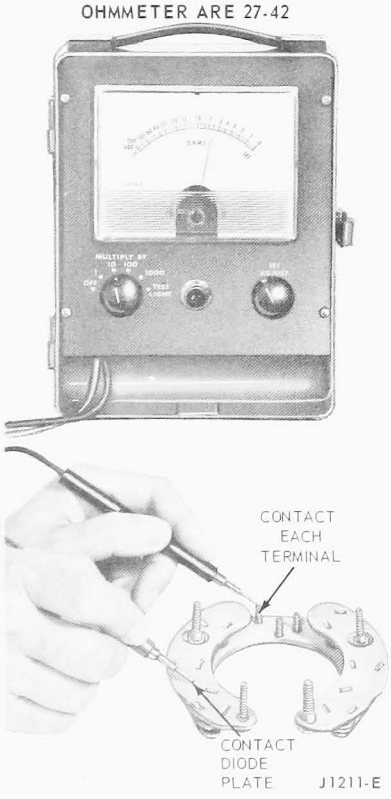

FIG. 15 Diode Test—Rear Terminal Alternator Except 61-Ampere

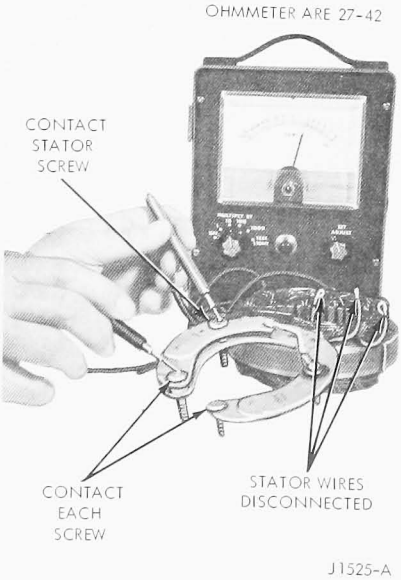

FIG. 16 Diode Test—61-Ampere Alternator

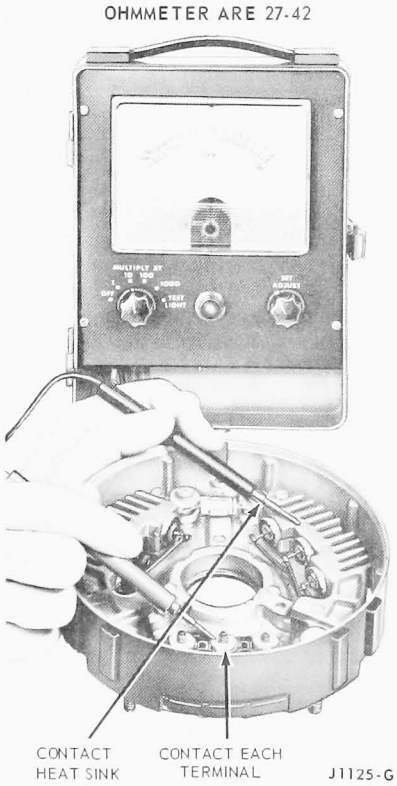

FIG. 17 Diode Test—Leece Neville Alternators

FUSE LINK CONTINUITY TEST

LIGHT TRUCK, ECONOLINE AND CLUB WAGON WITH AN AMMETER

Make certain that the battery is OK, then turn on the headlights or any accessory. If the headlights or accessory do not operate, the fuse link is probably burned out.

LIGHT TRUCK, ECONOLINE AND CLUB WAGON WITH AN INDICATOR LIGHT, BRONCO AND P-SERIES

Make certain the battery is OK, then check with a voltmeter for battery voltage at the alternator BAT. terminal. No voltage indicates that the fuse link is probably burned out.

REMOVAL AND INSTALLATION

FUSE LINK REPLACEMENT

1. Procure the proper service fuse link for the vehicle being repaired. The fuse links have an eyelet terminal for a 5/16 inch stud on one end. If the terminal is not required, cut off the fuse link as close to the terminal as possible and strip approximately 3/8 inch of insulation from the cut end.
2. Disconnect the battery ground cable.
3. Disconnect the fuse link terminal at the starter relay.
4. Remove the complete fuse link at the splice.
5. Cut out the original splice, then splice and solder the new fuse link with the existing wires from the original splice. Use rosin-core solder. Wrap the splices completely with vinyl electrician's tape.
   If a vehicle has two wires connected to the fuse-link eyelet, cut the fuse link from the eyelet and position the second wire with eyelet back on the starter relay terminal.
6. Securely connect the eyelet terminal(s) to the battery stud on the starter relay.
7. Install the repaired wiring as before using existing clips if provided.
8. Connect the battery ground cable.

PART 31-02 Batteries

This Information Applies To All Models

COMPONENT INDEX	Page	COMPONENT INDEX	Page
SPECIFICATIONS	02-02	Rotunda Battery Starter Tester ARE 16-31	02-01
TESTING		Rotunda Cell Analyzer	
Capacity Test – Battery	02-01	SRECA – 200	02-01

TESTING

Tests are made on a battery to determine the state of charge and also the condition. The ultimate result of these tests is to show that the battery is good, needs recharging, or must be replaced.

If a battery has failed, is low in charge, or requires water frequently, good service demands that the reason for this condition be found. It may be necessary to follow trouble shooting procedures to locate the cause of the trouble.

Refer to the Truck Diagnosis Manual, Form No. FD7962-70T, for battery trouble shooting procedures.

Hydrogen and oxygen gases are produced during normal battery operation. this gas mixture can explode if flames or sparks are brought near the vent openings of the battery. The sulphuric acid in the battery electrolyte can cause a serious burn if spilled on the skin or spattered in the eyes. It should be flushed away with large quantities of clear water.

Particular care should be used when connecting a booster battery in order to prevent sparks. Be certain to connect positive terminal to positive terminal and negative terminal to negative terminal.

Before attempting to test a battery, it is important that it be given a thorough visual examination to determine if it has been damaged. The presence of moisture on the outside of the case and/or low electrolyte level in one or more of the cells are indications of possible battery damage.

Original equipment batteries incorporate a single one-piece cover which completely seals the top of the battery and the individual cell connectors. This cover must not be pierced with test probes to perform individual cell tests.

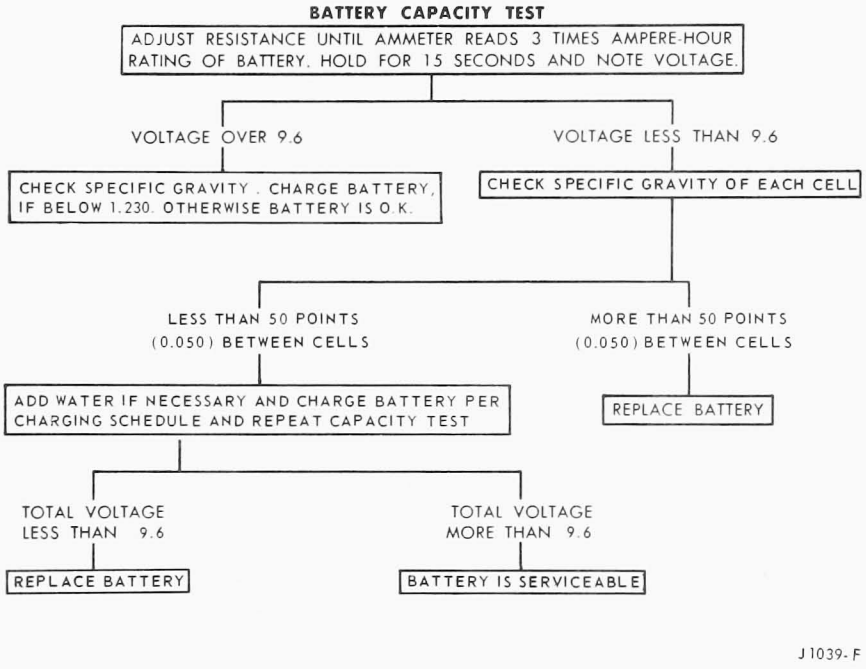

FIG. 1 Battery Capacity Test Outline

TESTS USING THE ROTUNDA CELL ANALYZER (SRECA-200)

The Rotunda Cell Analyzer (SRECA-200) measures the individual cell voltages by inserting probes into the cell openings. Follow the instructions that come with the unit.

A battery can also be tested by determining its ability to deliver current. This may be determined by conducting a Battery Capacity Test. Figure 1 shows the battery capacity test in outline form.

TESTS USING THE ROTUNDA BATTERY-STARTER TESTER ARE 16-31

BATTERY CAPACITY TEST

A high rate discharge tester (Rotunda Battery-Starter Tester ARE 16-31) in conjunction with a voltmeter is used for this test.

1. Turn the control knob on the Battery-Starter Tester to the OFF positio-

2. Turn the voltmeter selector switch to the 20-volt position.
3. Connect both positive test leads to the positive battery post and both negative test leads to the negative battery post. **The voltmeter clips must contact the battery posts and not the high rate discharge tester clips. Unless this is done the actual battery terminal voltage will not be indicated.**
4. Turn the load control knob in a clockwise direction until the ammeter reads three times the ampere hour rating of the battery. (A 45 ampere-hour battery should be tested at 135 amperes load).
5. With the ammeter reading the required load for 15 seconds, note the voltmeter reading. **Avoid leaving the high discharge load on the battery for periods longer than 15 seconds.**
6. If the voltmeter reading is 9.6 volts or more, the battery has good output capacity and will readily accept a charge, if required. Check the specific gravity. If the specific gravity reading is 1.230 or below, add water if necessary and charge the battery until it is fully charged (Fig. 1). **Always disconnect the battery ground cable when charging the battery.**

The battery is fully charged when the cells are all gassing freely and the specific gravity ceases to rise for three successive readings taken at hourly intervals. Additional battery testing will not be necessary after the battery has been properly charged.

7. If the voltage reading obtained during the capacity test is below 9.6 volts, check the specific gravity of each cell.
8. If the difference between any two cells is more than 50 points (0.050), the battery is not satisfactory for service and should be replaced.
9. If the difference between cells is less than 50 points (0.050), the battery should be charged according to the charging schedule in the Specifications Section. Batteries that are completely discharged may not accept a fast charge. If this is found, the battery should be slow charged until the charge rate goes up and it will accept the fast charge. This may require up to four hours of slow charge. In some cases the electrolyte level may be too low to obtain a specific gravity reading. In such cases water should be added until the electrolyte level just covers the ring in the filler well, then charge the battery at 35 amperes for the maximum charging time indicated in Specifications for the capacity of the battery being tested.
10. After the battery has been charged, repeat the capacity test. If the capacity test battery voltage is still less than 9.6 volts, replace the battery. If the voltage is 9.6 volts or more, the battery is satisfactory for service.
11. If the battery is found to be discharged only, check for a loose fan belt, loose electrical connections and charging system performance.

SPECIFICATIONS

BATTERIES

BATTERY FREEZING TEMPERATURES	
Specific Gravity	Freezing Temperature
1.280	-90°F
1.275	-85°F
1.250	-62°F
1.225	-38°F
1.200	-16°F
1.175	- 4°F

BATTERY FREEZING TEMPERATURES	
Specific Gravity	Freezing Temperature
1.150	+ 5°F
1.125	+13°F
1.100	+19°F
1.075	+24°F
1.050	+27°F

Battery Ampere Hours	Number of Plates	Length (Inches)	Filler Cap Color
45	54	9-7/16	Yellow
55	66	10-3/4	Red
55	66	13	Red
70	66	12-1/2	Red
70	78	14-1/4	Yellow

Battery Ampere Hours	Number of Plates	Length (Inches)	Filler Cap Color
93	78	13-1/2	Red
158	63	6 Volt 10-3/4	Red
155	126	20-1/2 by 9-5/8 high	Red
203	174	20-5/8 by 10-1/2 high	Red

ALLOWABLE BATTERY HIGH RATE CHARGE TIME SCHEDULE								
Specific Gravity Reading	Charge Rate Amperes	Battery Capacity Ampere Hours						
		45	55	70	93	155	158	204
1.125-1.150 ①	35	65 min	80 min	100 min	135 min	225 min	225 min	300 min
1.150-1.175	35	50 min	60 min	80 min	105 min	175 min	175 min	230 min
1.175-1.200	35	40 min	50 min	60 min	85 min	140 min	140 min	185 min
1.200-1.225	35	30 min	35 min	45 min	60 min	100 min	100 min	135 min
Above 1.225	5	②	②	②	②	③	③	③

① If the specific gravity is below 1.125, use the indicated high rate of charge for the 1.125 specific gravity, then charge at 5 amperes until the specific gravity reaches 1.250 at 80° F.

② Charge at 5 ampere rate only until the specific gravity reaches 1.250 at 80°F.

③ Charge at 10 ampere rate only until the specific gravity reaches 1.250 @ 80°F.

At no time during the charging operation should the electrolyte temperature exceed 130°F.

PART 31-10 G. P. D. Rear Terminal Alternator

This Information Applies To: All Models			
COMPONENT INDEX	Page	COMPONENT INDEX	Page
ADJUSTMENTS	10-02	REMOVAL AND INSTALLATION	10-02
DESCRIPTION AND OPERATION	10-01		
DISASSEMBLY AND OVERHAUL		SPECIFICATIONS	10-09
38, 42, 55 and 61-Ampere	10-03		
70 and 90-Ampere	10-07	TESTING	10-02

DESCRIPTION AND OPERATION

ALTERNATOR

The alternator charging system is a negative ground system, and consists of an alternator, a regulator, a charge indicator, a storage battery, a fuse link on some models and associated wiring. Refer to the Wiring Diagram Manual, Form 7795P-73, for schematics and locations of wiring harnesses.

The alternator is belt driven from the engine. Current is supplied from the alternator-regulator system to the rotating field of the alternator through two brushes to two slip rings.

The alternator produces power in the form of alternating current. The alternating current is rectified to direct current by six diodes (eight diodes in 61 ampere alternators). The alternator regulator automatically adjusts the alternator field current to maintain the alternator output voltage within prescribed limits to correctly charge the battery.

If a charge indicator lamp is used in the charging system (Fig. 1), the system operation is as follows: When the ignition switch is turned ON, a small electrical current flows through the lamp filament (turning the lamp ON) and through the alternator regulator to the alternator field. When the engine is started, the alternator field rotates and produces a voltage in the stator winding. When the voltage at the alternator stator terminal reaches about 3 volts, the regulator field relay closes. This puts the same voltage potential on both sides of the charge indicator lamp causing it to go out. When the field relay has closed, current passes through the regulator A terminal and is metered to the alternator field.

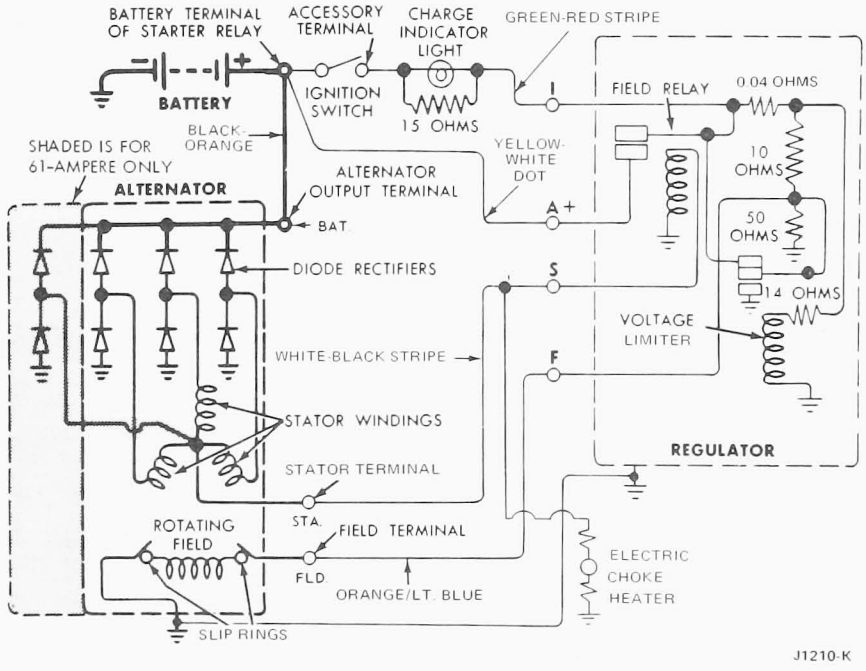

FIG. 1 Alternator Charging System—Indicator Light

If an ammeter is used in the charging system (Fig. 2), the regulator I terminal and the alternator stator terminal are not used. When the ignition switch is turned ON, the field relay closes and electrical current passes through the regulator A terminal and is metered to the alternator field. When the engine is started, the alternator field rotates causing the alternator to operate. The ammeter indicates current flow into (charge) or out of (discharge) the vehicle battery.

Fuse links are included in the charging system wiring on some models (Part 31-01). This fuse link is used to prevent damage to the wiring harness and alternator if the wiring harness should become grounded, or if a booster battery is connected to the charging system with the wrong polarity.

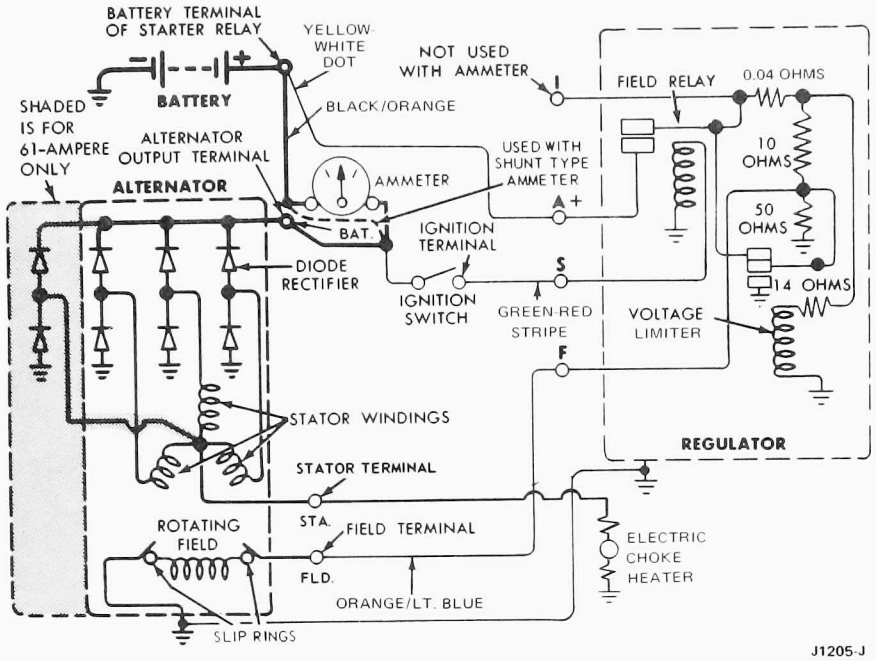

FIG. 2 Alternator Charging System—Ammeter

TESTING

Refer to the Ford Car and Truck Diagnosis Manual for diagnosis of the alternator charging system. Test procedures for the charging system are given in Part 31-01 of this manual. Check the alternator drive belt and adjust it to specification (Specifications at end of this Part), before proceeding with any tests. Check and tighten all connectors at the starter relay and battery. DO NOT OPERATE THE ENGINE WITH THE BATTERY DISCONNECTED.

ADJUSTMENTS

BELT ADJUSTMENT

1. Check the belt tension with tool T63L-8620-A. The belt should be within specifications (Specifications Section at end of this Part).
2. If the belt is not within specification, loosen the alternator mounting bolt to a snug position and loosen the adjusting arm bolts.
3. **Apply pressure on the alternator front housing only** and tighten the adjusting arm to alternator bolt.
4. Check the belt tension using Tool T63L-8620-A. Adjust the belt for specified tension.
5. Tighten all mounting bolts to 22-32 ft-lb torque.

REMOVAL AND INSTALLATION

Removal

1. Disconnect the battery ground cable.
2. Loosen the alternator mounting bolts and remove the adjustment arm-to-alternator attaching bolt.
3. Remove the electrical connectors from the alternator. The stator and field connectors are the push-on type. They should be pulled straight off the terminal studs to prevent damage to them.
4. Disengage the alternator belt. Remove the alternator mounting bolt, and remove the alternator.

Installation

1. Install the alternator wiring harness (Figs. 3 or 4). Position the alternator to the engine, and install the spacer (if used) and the alternator mounting bolt. Tighten the bolt only finger tight.
2. Install the adjustment arm-to-alternator attaching bolt.
3. Adjust the belt tension using tool T63L-8620-A. **Apply pressure on the alternator front housing only,**

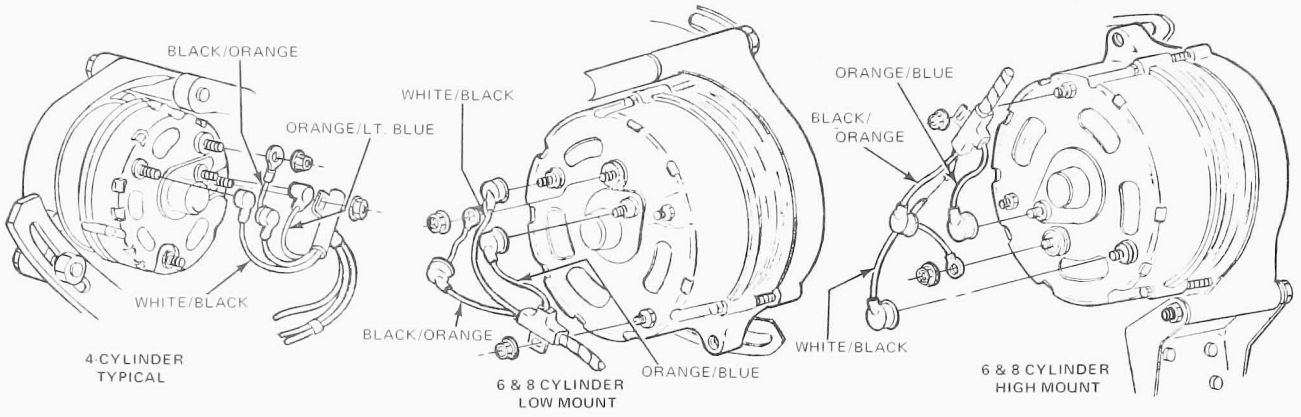

FIG. 3 Wiring Harness Connection—Typical Except 70 and 90-Ampere Alternator

when tightening the belt.

Tighten the adjusting arm bolts to 23-33 ft-lb torque, and the mounting bolt to 50-60 ft-lb torque.

4. Connect the battery ground cable.

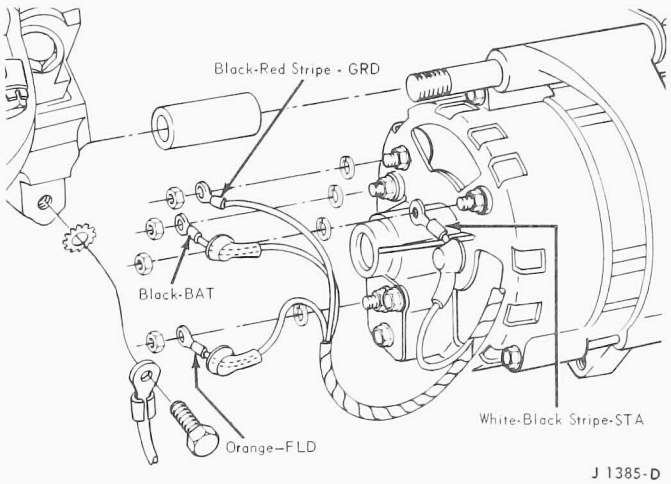

FIG. 4 Wiring Harness Connections—70 and 90-Ampere Alternators

OVERHAUL

G.P.D. REAR TERMINAL ALTERNATOR—EXCEPT 70 AND 90-AMPERE

Disassembly

Fig. 5 shows a disassembled view of the G.P.D. rear termial alternator.

1. Mark both end housings and the stator with a scribe mark for assembly.
2. Remove the three housing through bolts.
3. Separate the front housing and rotor from the stator and rear housing.
4. Remove all the nuts and insulators from the rear housing and remove the rear housing from the stator and rectifier assembly.
5. Remove the brush holder mounting screws and remove the holder, brushes, brush springs, insulator and terminal.
6. If replacement is necessary, press the bearing from the rear housing, supporting the housing on the inner boss.
7. If the rectifier assembly is being replaced, unsolder the stator leads from rectifier terminals, and separate the stator from the rectifier assembly. Use a 100-watt soldering iron.
8. Original production alternators will have one of three types of rectifier assembly circuit boards (Fig. 6); one has the circuit board spaced away from the diode plates with the diodes exposed. Another type is a single circuit board with built-in diodes. The third type circuit board has built-in diodes with an additional booster diode plate containing two diodes. This circuit board is used only in the 61-ampere alternator.

If the alternator rectifier has an exposed diode circuit board, remove the screws from the rectifier by rotating the bolt heads 1/4 turn clockwise to unlock

them and then remove the screws (Fig. 6). Push the stator terminal straight out on a rectifier with the diodes built into the circuit board (Fig. 6). Avoid turning the screw while removing, to make certain that the straight knurl will engage the insulators when installing. Do not remove the grounded screw (Fig. 7).

On a 61-ampere alternator rectifier, press the stator terminal screw from the circuit board as shown in Fig. 8. When the terminal screws has moved about 1/4 inch, remove the nut from the end of the screw and lift the screw from the circuit board. **Do not twist the screw in the circuit board.**

9. Remove the drive pulley nut with the tool shown in Fig. 9; then, pull the lock washer, pulley, fan, fan spacer, rotor and rotor stop from the rotor shaft.
10. Remove the three screws that hold the front end bearing retainer, and remove the retainer. If the bearing is damaged or has lost its lubricant, support the housing close to the bearing boss, and press out the old bearing from the housing.
11. Perform a diode test and a field open or short circuit test (Refer to Testing in this Part).

Assembly

1. The rotor, stator and bearings must not be cleaned with solvent. Wipe these parts off with a clean cloth.
2. Press the front bearing in the front housing bearing boss **(put pressure on the bearing outer race only)**, and install the bearing retainer (Fig. 5).
3. If the stop-ring on the rotor drive shaft was damaged, install a new

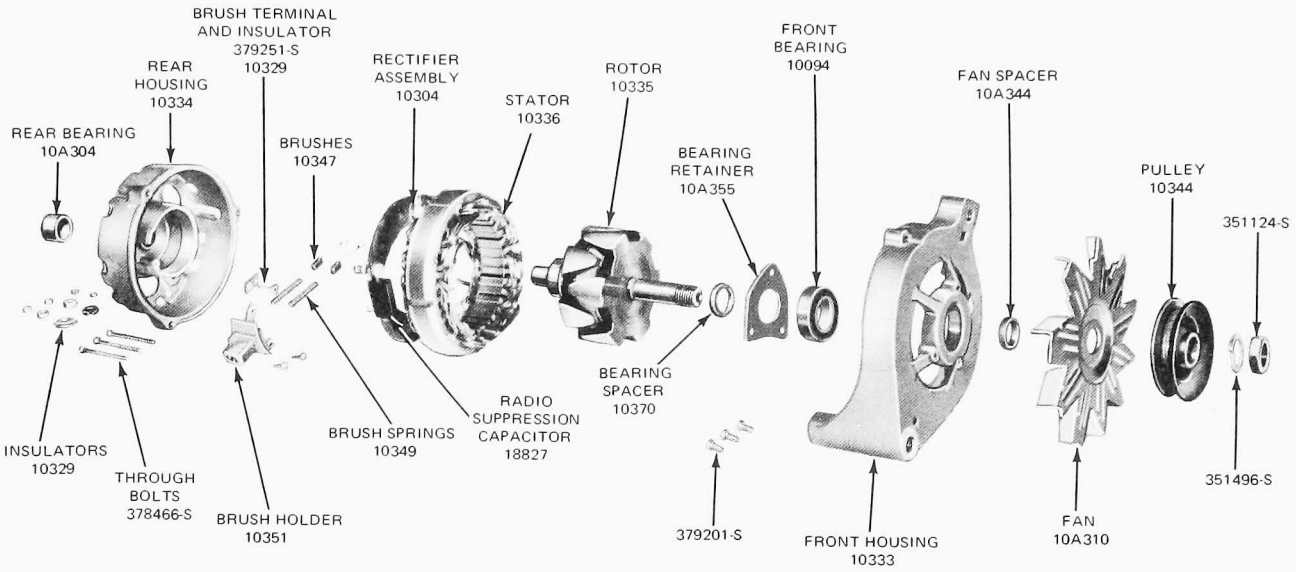

FIG. 5 Disassembled Alternator

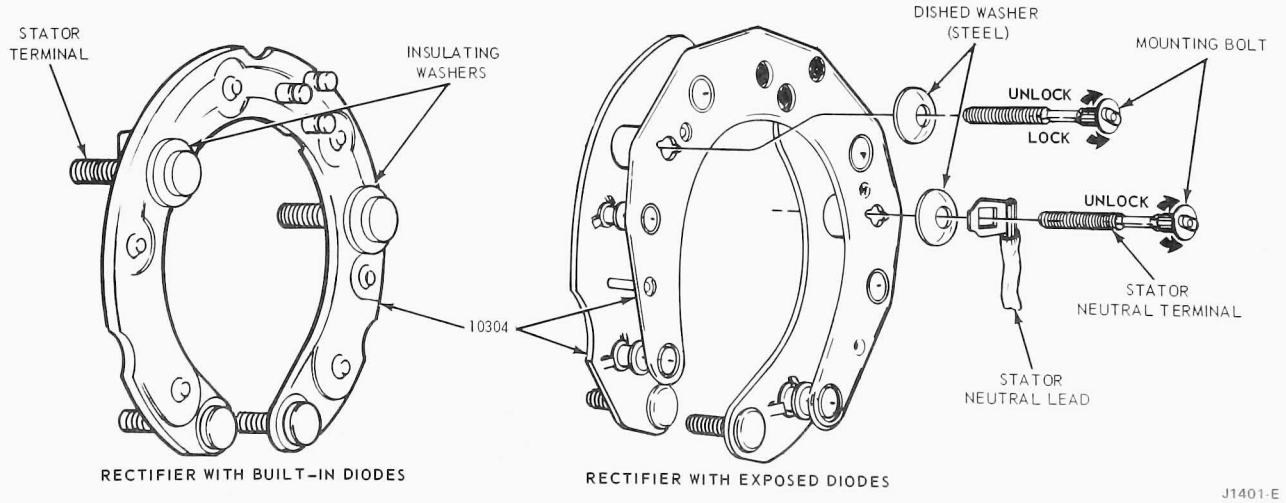

FIG. 6 Rectifier Assembly

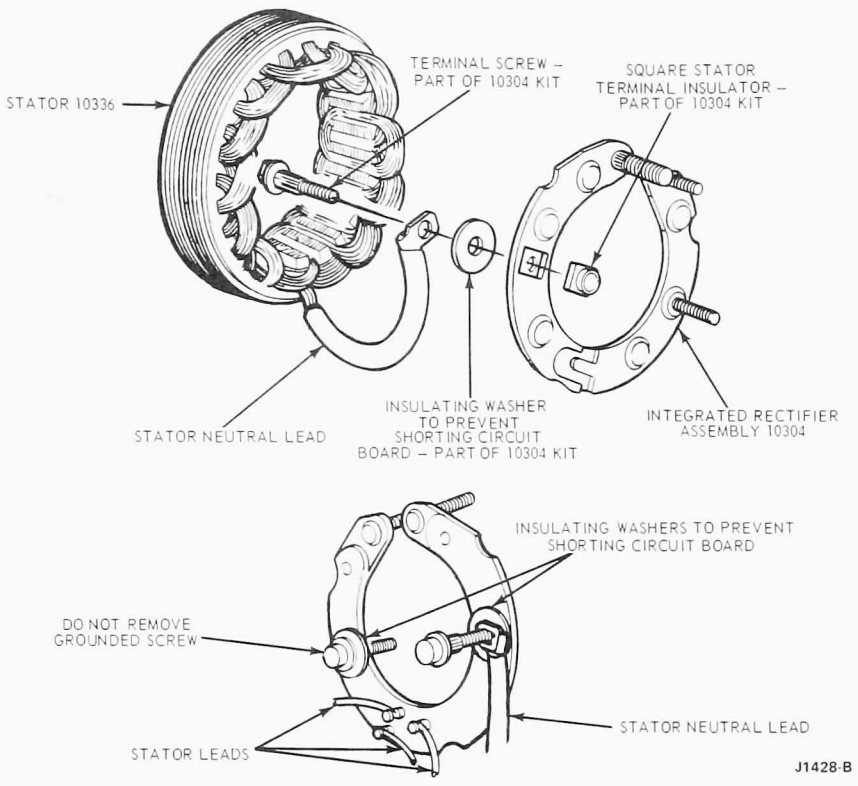

FIG. 7 Stator Terminal Installation—Integral Rectifier Circuit Board

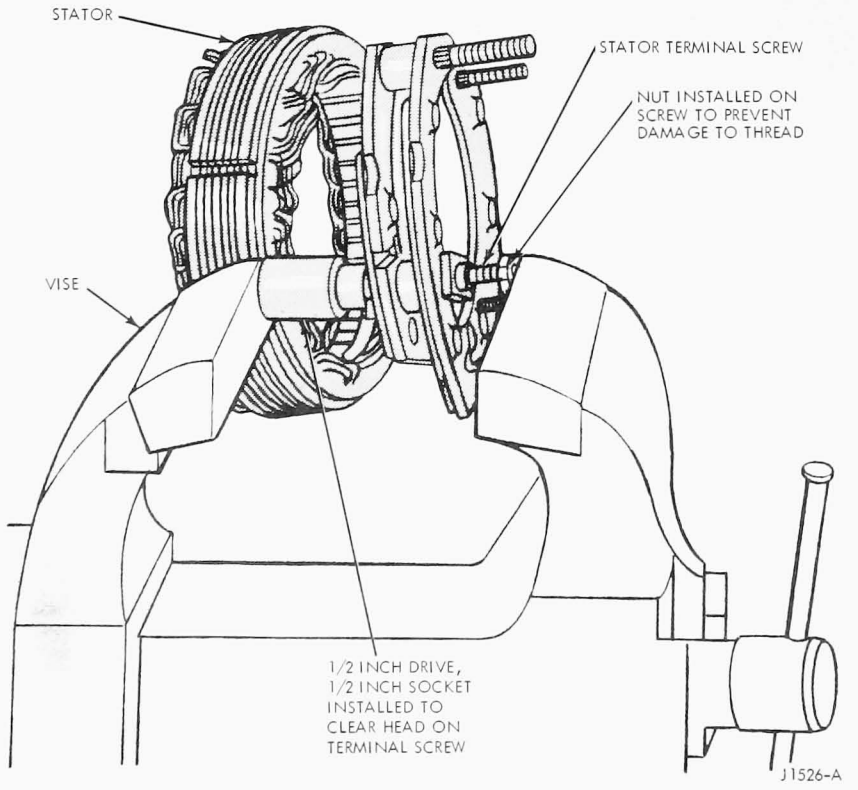

FIG. 8 Stator Terminal Screw Removal—61-Ampere Alternator

stop-ring. Push the new ring on the shaft and into the groove. **Do not open the ring with snap ring pliers as permanent damage will result.**

4. Position the rotor stop on the drive shaft with the recessed side against the stop-ring.
5. Position the front housing, fan spacer, fan, pulley and lock washer on the drive shaft and install the retaining nut. Tighten the retaining nut with the tool shown in Fig. 9 to the specified torque (Specifications Section in this Part).
6. If the rear housing bearing was removed, support the housing on the inner boss and press in a new bearing flush with the outer end surface.
7. Place the brush springs, brushes, brush terminal and terminal insulator in the brush holder and hold the brushes in position by inserting a piece of stiff wire in the brush holder as shown in Fig. 10.

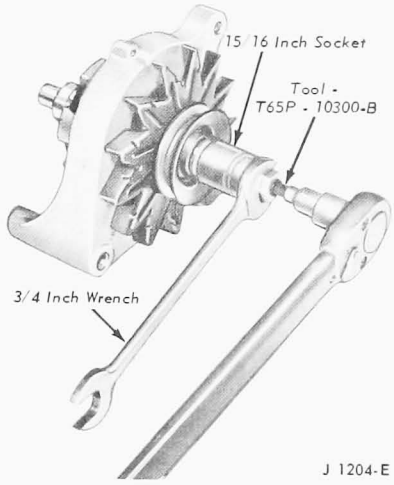

FIG. 9 Pulley Removal

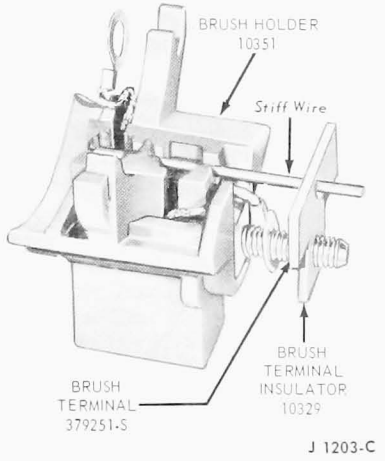

FIG. 10 Brush Holder Assembly

8. Position the brush holder assembly in the rear housing and install the mounting screws. Position the brush leads in the brush holder as shown in fig. 11.
9. Wrap the three stator winding leads around the rectifier terminals and solder them. Use a 100-watt soldering iron and rosin-core solder. Position the stator neutral lead eyelet on the stator terminal screw and install the screw in the rectifier assembly (Fig. 12).
10. For a rectifier with the diodes exposed, insert the special screws through the wire lug, dished washers and circuit board (Fig. 6). Turn them 1/4 turn counterclockwise to lock them. For single circuit boards with built-in diodes, insert the screws straight through the wire lug, insulating washer and rectifier into the insulator (Fig. 7).

The dished washers are to be used only on the circuit board with exposed diodes (Fig. 6). If they are used on the single circuit board, a short circuit will occur. A flat insulating washer is to be used between the stator terminal and the board, when a single circuit board is used (Fig. 7).

11. For a rectifier with a booster diode plate (61-ampere only), proceed as follows:
    a. Position the stator wire terminal on the stator terminal screw, and position the screw into the rectifier. Position the square insulator over the screw and into the square hole in the rectifier (Fig. 13).

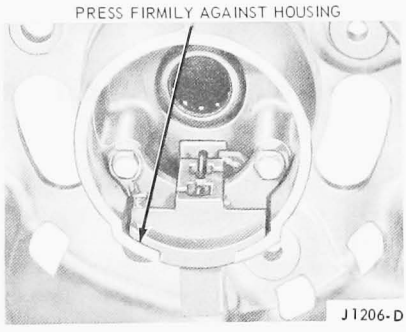

FIG. 11 Brush Lead Positions

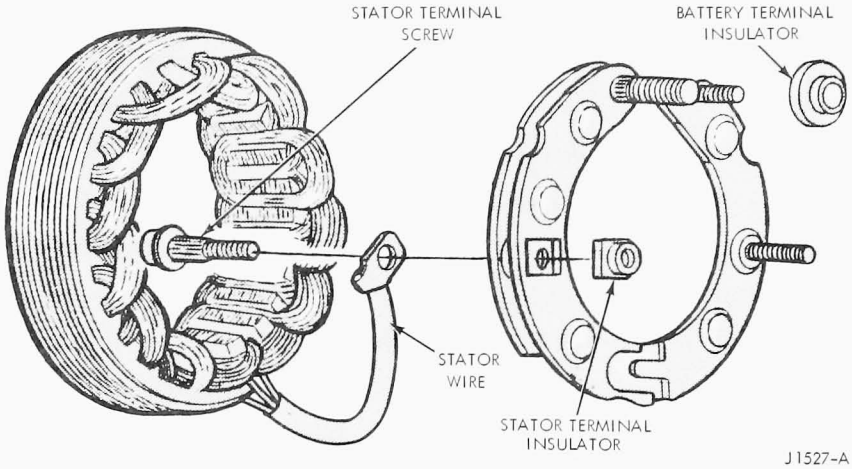

FIG. 13 Stator and Rectifier Assembly—61-Ampere Alternator

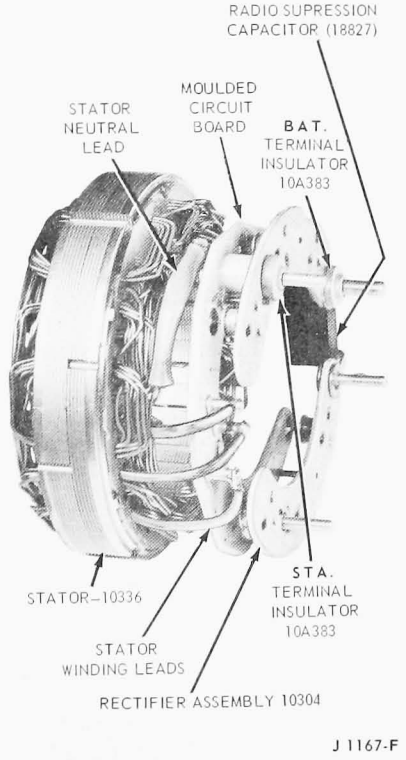

FIG. 12 Stator Lead Connections—Except 61-Ampere Alternator

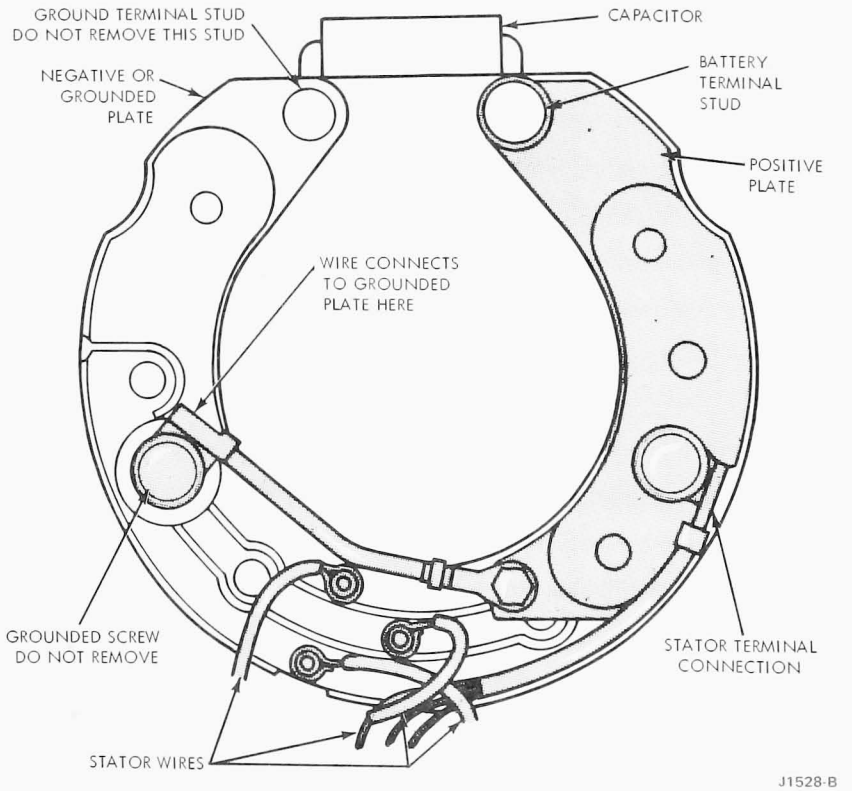

FIG. 14 Rectifier Terminal Locations—61-Ampere Alternator

b. Rotate the terminal screw until it locks in position. Then, press the screw in finger tight.
c. Position the stator wire as shown in Fig. 14. Then, press the terminal screw into the rectifier and insulator as shown in Fig. 15.

12. Position the radio noise suppression capacitor on the rectifier terminals. On the circuit board with exposed diodes, install the STA and BAT terminal insulators (Fig. 12). On the single circuit board, position the square stator-terminal insulator in the square hole in the rectifier assembly (Fig. 7). Position tthe BAT terminal insulator (Fig. 16) on the BAT terminal.

Position the stator and rectifier assembly in the rear housing. Make certain that all terminal insulators are seated properly in their recesses (Fig. 16). Position the STA (black), BAT (red), and FLD (orange) insulators, on the terminal bolts, and install the retaining nuts (Fig. 17).

13. Wipe the rear end bearing surface of the rotor shaft with a clean lint-free rag.
14. Position the rear housing and stator assembly over the rotor and align the scribe marks made during disassembly. Seat the machined portion of the stator core into the step in both end housings. Install the housing through bolts. Remove the brush retracting wire, and put a daub of water-proof cement over the hole to seal it.

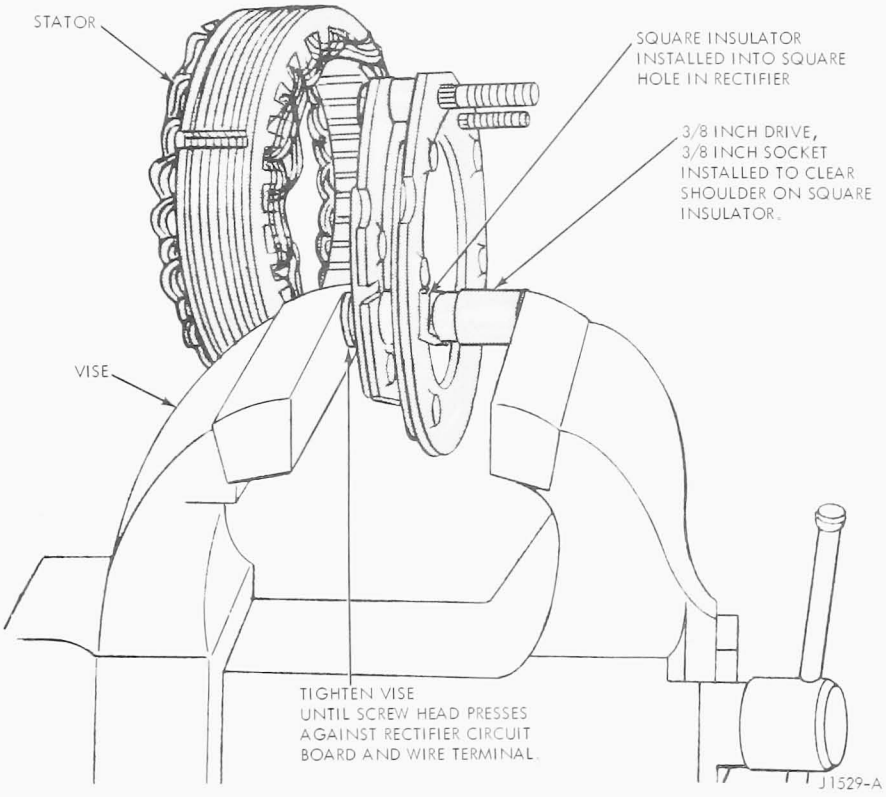

FIG. 15 Stator Terminal Screw Installation—61-Ampere Alternator

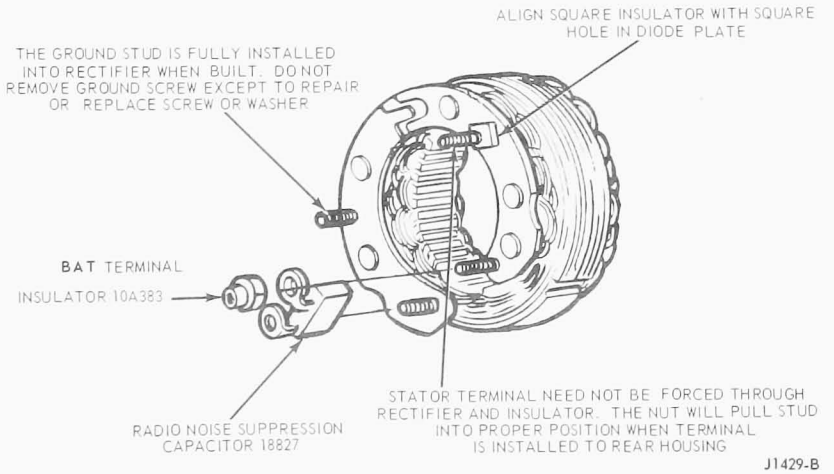

FIG. 16 Terminal Insulators—Fiber-Glass Circuit Board

70 AND 90-AMPERE G.P.D. REAR TERMINAL ALTERNATOR

Disassembly

Figure 18 shows a disassembled view of the G.P.D. rear terminal 70-ampere alternator.

1. Remove the brush holder and cover assembly from the rear end housing.
2. Mark both end housings and the stator with a scribe mark for assembly.
3. Remove the three housing through bolts.
4. Separate the front housing and rotor from the stator and rear housing.
5. Remove the drive pulley nut, lock washer, flat washer, pulley, fan, fan spacer and rotor from the front housing (Fig. 9).
6. Remove the three screws that hold the front bearing retainer, and remove the retainer. If the bearing is damaged or has lost its lubricant, support the housing close to the bearing boss, and press out the bearing from the housing.
7. Remove all the nut and washer assemblies and insulators from the rear housing, and remove the rear

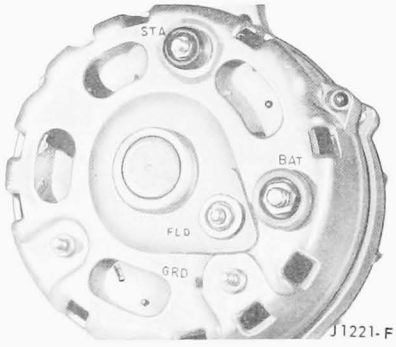

FIG. 17 Alternator Terminal Locations

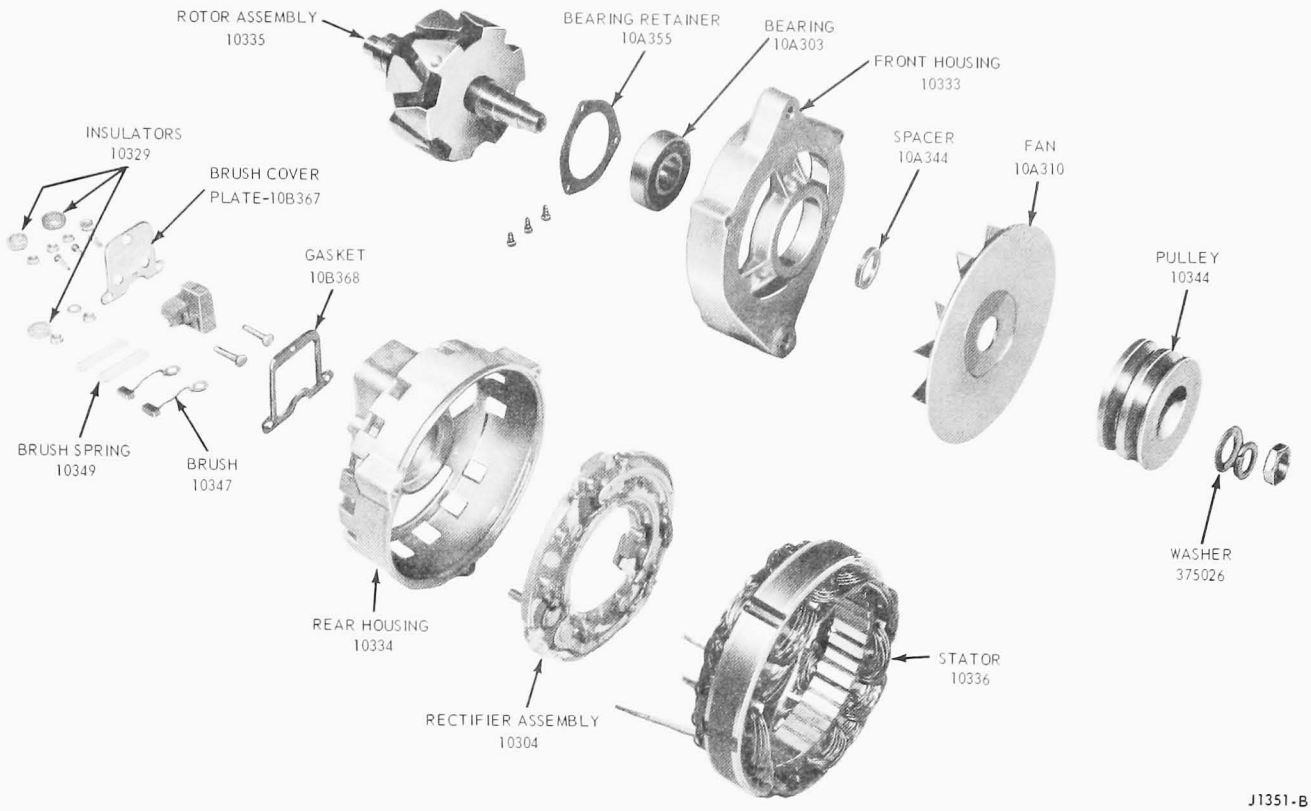

FIG. 18 Disassembled 70-Ampere Alternator—Typical of 90-Ampere Alternator

housing from the stator and rectifier assembly.

8. If replacement is necessary, press the bearing from the rear housing, supporting the housing on the inner boss.
9. Unsolder the stator leads from the rectifier assembly, and separate the stator from the assembly. Use a 200 watt soldering iron.
10. Perform a diode test and an open and grounded stator coil test.

Assembly

1. If the front bearing is being replaced, press the new bearing in the bearing boss putting pressure on the outer race only. Then, install the bearing retainer and tighten the retainer screws until the tips of the retainer touch the housing.
2. Position the rectifier assembly to the stator, wrap the stator leads around the rectifier terminals and solder them (Fig. 19 or 20). Use a 200 watt soldering iron.
3. If the rear housing bearing was removed, press in a new bearing from the inside of the housing until the bearing is flush with the outer end surface. Put pressure on the bearing outer race only.
4. Install the BAT-GRD insulator (Fig. 19 or 20). Position the stator and rectifier assembly in the rear end housing.
5. Install the STA (purple) and BAT (red) terminal insulators on the terminal bolts and install the nut and washer assemblies. **Make certain that the shoulders on all insulators, both inside and outside of the housing, are seated properly before tightening the nuts.**
6. Position the front housing over the rotor and install the fan spacer, fan, pulley, flat and lock washers and nut on the rotor shaft (Fig. 18).
7. Wipe the rear end bearing surface of the rotor shaft with a clean lint free rag.
8. Position the rotor with the front housing into the stator and rear housing assembly, and align the scribe marks made during disassembly. Seat the machined portion of the stator core into the step in both housings, and install the through bolts.
9. Hold the brushes in position by inserting a stiff wire in the brush

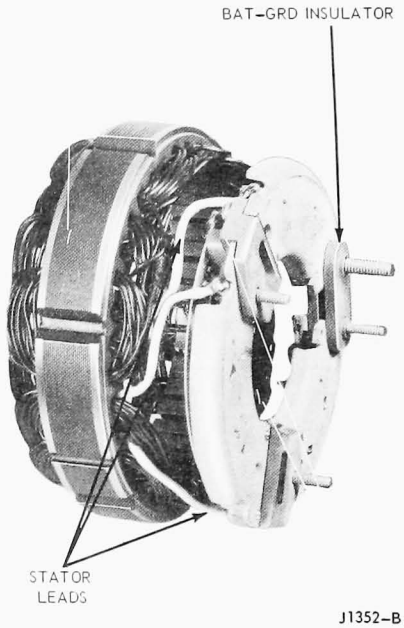

FIG. 19 Stator Lead Connections—70-Ampere Alternator

holder (Fig. 21).

10. Position the brush holder and cover assembly to the rear housing and install the three mounting screws. Remove the brush retracting wire and put a daub of water-proof cement over the hole to seal it.

BRUSH REPLACEMENT

1. Remove the brush holder and cover assembly from the rear housing.
2. Remove the terminal bolts from the brush holder and cover assembly, and remove the brush assemblies.
3. Position the new brush terminals on the terminal bolts and assemble the terminals, bolts, brush holder washers and nuts (Fig. 21). The insulating washer mounts under the FLD terminal nut. The entire brush and cover assembly is also available for service.
4. Depress the brush springs in the brush holder cavities and insert the brushes on top of the springs. Hold the brushes in position by inserting a stiff wire in the brush holder as shown in Fig. 21. Position the brush leads as shown in Fig. 21.
5. Install the brush holder and cover assembly to the rear housing. Remove the brush retracting wire and put a daub of water-proof cement over the hole to seal it.

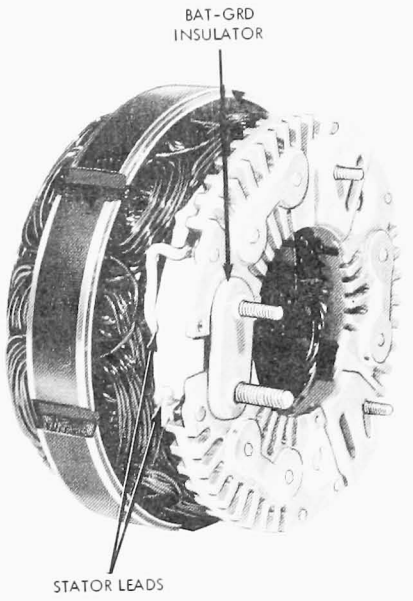

FIG. 20 Stator Lead Connections—90-Ampere Alternator

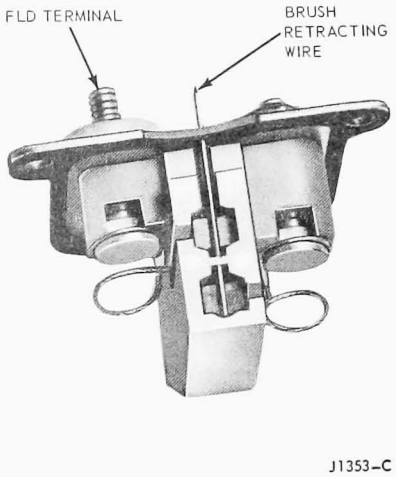

FIG. 21 Field Brush Assembly

SPECIFICATIONS

ALTERNATOR–G.P.D.

Rating			Field Current	Cut-In Speed (Engine	Rated Output Speed (Engine rpm)		Slip-Ring Turning (Inches)		Brush Length (Inches)		Pulley Nut Torque	Belt Tension
Identification Plate Color	Amperes @ 15V	Watts @ 15V	Amps @ 12V	rpm)	Cold	Hot	Min. Dia.	Max. Runout	New	Wear Limit	(Ft-Lbs)	(Lbs) ①
Purple	38	570	2.5	400	2000	2900	1.22	0.0005	1/2	5/16	60-100	70-110
Orange	42	630	2.9	400	2000	2900	1.22	0.0005	1/2	5/16	60-100	70-110
Red	55	825	2.9	400	2000	2900	1.22	0.0005	1/2	5/16	60-100	70-110
Green	61	915	2.9	400	2000	2900	1.22	0.0005	1/2	5/16	60-100	70-110
Black	70	1050	2.9	360	1640	–	1.22	0.0005	5/8	3/8	60-100	70-110
Red	90	1350	2.9	812	2900	–	1.22	0.0005	5/8	3/8	60-100	70-110

① Used belt. New Belt 140. A used belt is one that has been in operation for more than 10 minutes. If belt tension is not within specification, or belt has been removed, reset to 110 lbs.

SPECIAL TOOLS

Ford Tool No.	Former No.	Description
T63L-8620-A	8620 BT-33-73-F	Belt Tension Gauge
T65P-10300-B		Alternator Pulley Remover
ARE-16-31		Battery-Starter Tester
ARE-20-22		Alternator-Regulator Tester
ARE-27-38		Volt-Amp. Regulator Tester
ARE-27-42		Ohmmeter

CJ1460-D

PART 31-21 Leece-Neville Alternators

COMPONENT INDEX	Page	COMPONENT INDEX	Page
ADJUSTMENTS	21-01	REMOVAL AND INSTALLATION	21-02
DESCRIPTION AND OPERATION	21-01	SPECIFICATIONS	21-03
DISASSEMBLY AND OVERHAUL	21-02	TESTING	21-01

DESCRIPTION AND OPERATION

70 and 105-AMPERE ALTERNATORS

The operation and general electrical description of the 70 and 105-ampere Leece Neville alternators is similar to that for the G.P.D. alternator (Part 31-10). The field brushes of the Leece Neville alternators are mounted in a sealed brush holder on the brush housing (Fig. 4). Two sealed ball bearings support the rotor in both end housings.

TESTING

Refer to Wiring Diagram Manual, Form 7795P-73 for schematics and locations of wiring harnesses. **Use care when connecting any test equipment to the alternator system, as the alternator output terminal is connected to the battery at all times. Refer to Part 31-01 for charging system test procedure.**

ADJUSTMENTS

BELT ADJUSTMENT

1. Check the belt tension with Tool T63L-8620-A. The belt should be within specifications (Specifications Section at end of this Part).
2. If the belt is not adjusted within specifications, loosen the alternator mounting bolt to a snug position and loosen the adjusting arm bolts.
3. **Apply pressure on the alternator front housing to increase the belt tension** and tighten the adjusting arm to alternator bolt.
4. Recheck the belt tension with tool T63L-8620-A. Readjust the belt to the specified tension if necessary.
5. Tighten all mounting bolts

REMOVAL AND INSTALLATION

ALTERNATOR REPLACEMENT

1. Disconnect the battery ground cable.
2. Loosen the mounting bolts and the adjusting arm to alternator bolt, and remove the drive belt.
3. Remove the mounting bolts and the adjusting arm bolt, disconnect the alternator wires and remove the alternator.
4. Position the alternator to the mounting bracket and install the mounting bolts and adjusting bracket bolt finger tight. Connect the wires to the alternator (Fig. 1).
5. Adjust the belt tension with tool T63L-8620-A. Tighten the mounting bolts to 22-32 ft-lb torque, and check the operation of the alternator.

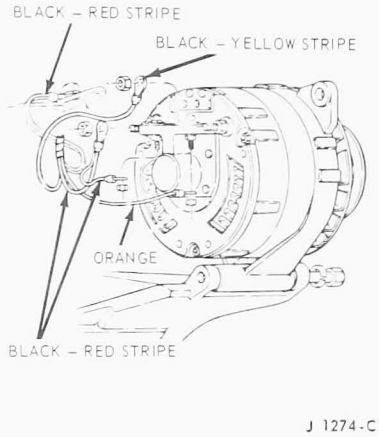

FIG. 1 Typical Leece Neville Alternator Wiring Connections

DISASSEMBLY AND OVERHAUL

A disassembled view of the alternator is shown in Fig. 2.

DISASSEMBLY

1. Remove the pulley nut. Then, remove the pulley with a gear puller, and remove the shaft key and spacer.
2. Remove the brushes and terminal insulator, and remove the brush holder assembly from the housing.
3. Remove the through bolts and separate the brush end housing and stator assembly from the alternator.
4. Remove the nuts from the three AC terminals. Remove the stator from the end housing.
5. If the front bearing is damaged and must be replaced, remove the rotor from the drive-end housing using a gear puller or an arbor press. Then, remove the bearing retainer from the drive-end housing and press out the old bearing from the housing.
6. If the rear bearing is worn or damaged and must be replaced, unsolder the field leads from the slip rings, and remove the slip rings and the bearing from the slip ring end of the rotor shaft. Use a gear puller. **Use care in removing the slip rings, so as not to damage them. If they are cracked or broken during disassembly, they must be replaced.**
7. Remove the rectifier assembly mounting bolts, terminals, and insulators and remove the rectifier assemblies. Remove the stator terminal insulator.

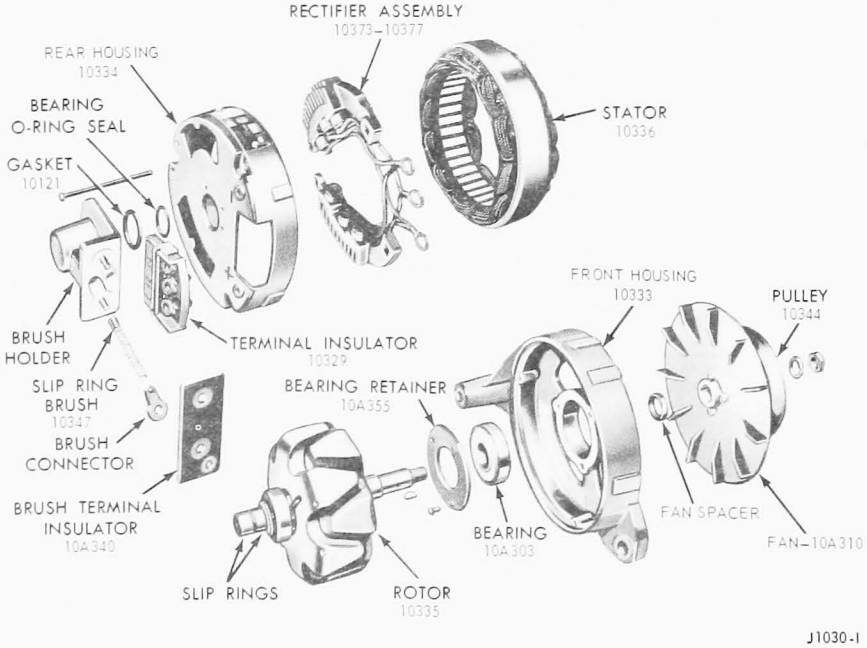

FIG. 2 Disassembled 70 and 105-Ampere Leece Neville Alternator

PARTS REPAIR OR REPLACEMENT

Nicks and scratches may be removed from the rotor slip rings by turning down the slip rings. Remove only enough to clean up the surface. If the slip rings are badly damaged, they should be replaced.

ASSEMBLY

1. Press the new bearing onto the slip-ring end of the rotor shaft. **Put**

pressure on the bearing inner race only. Heat the slip rings so that the insulation will not split, carefully press the slip rings on the shaft and solder the field wires to the rings.

2. Press the new bearing into the drive end housing, and install the bearing retainer. **Put pressure on the outer race only.**
3. Place the slip-ring end of the shaft firmly on a flat plate in an Arbor Press, and assemble the drive end housing and bearing on to the drive end of the shaft. **Use a tube or pipe so as to put pressure on the bearing inner race only.**
4. Install the stator insulator. Put the rectifier insulators in position. Place the rectifier assemblies in the housing and install the mounting screws and terminals. Make certain that the rectifier assemblies are insulated from the end frame. Position the three rectifier terminals to the terminal studs. Position the wires under the tabs extending from each heat sink to prevent interference with the rotor (Fig. 3).
5. Place the stator in position (Fig. 3), and line up the end-housing through-bolt holes to match those in the stator. Position the three stator terminals over the three rectifier terminals, and install the terminal nuts (Fig. 3).

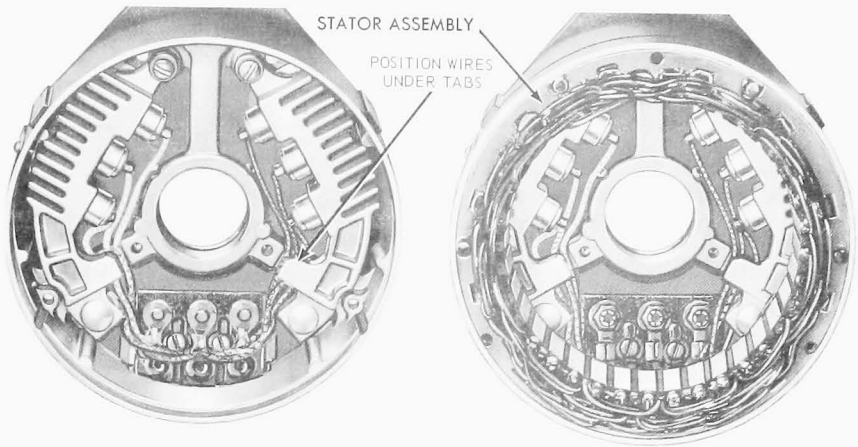

FIG. 3 Slip-Ring End Housing, Rectifier and Stator Assembly

6. Place the brush end housing and stator assembly into position over the rotor. Use the housing through bolts to line up the two housings and the stator. Tighten the housing through bolts.
7. Install the brush holder with the O-ring between the holder and the frame (Fig. 2). Place the brushes and springs in the holder with the extruded portion of the brush connectors against the terminal screw shoulders. Hold the brush connectors in position with a machinists steel scale until the terminal insulator is installed. Install the brush terminal insulator, and withdraw the steel scale.
8. Install the fan spacer, shaft key, fan, pulley, and lock washer and nut. Tighten the mounting nut to 40 ft-lbs torque.

SPECIFICATIONS

ALTERNATOR–LEECE NEVILLE

Supplier	Rating: Identification Plate Color	Rating: Amperes @ 15V	Rating: Watts @ 15V	Field Current Amps @ 12V	Cut-In Speed (Engine rpm)	Rated Output Speed (Engine rpm) Cold	Slip-Ring Turning (Inches): Min Dia	Slip-Ring Turning (Inches): Max Runout	Brush Length (Inches): New	Brush Length (Inches): Wear Limit	Pulley Nut Torque (Ft.Lbs)	Belt Tension (lbs) ①
Leece-Neville	–	70	1050	2.9	400	1600	Light Cut	0.002	1/2	9/32	40-50	70-100
Leece-Neville	–	105	1575	2.9	500	1640	Light Cut	0.002	1/2	9/32	40-50	70-100

①Used belt.New Belt 140. A used belt is one that has been in operation for more than 10 minutes. If belt tension is out of specification, or belt has been removed, reset to 110 lbs.

CJ1461-C

PART 31-40 Alternator Electro-Mechanical Regulator

This Information Applies To: All 38, 42, 55 and 61 Ampere Alternator Regulators

COMPONENT INDEX	Page	COMPONENT INDEX	Page
ADJUSTMENTS	40-02	REMOVAL AND INSTALLATION	40-02
DESCRIPTION AND OPERATION	40-01	TESTING	40-01

DESCRIPTION AND OPERATION

ELECTRO-MECHANICAL REGULATOR

The alternator regulator has been designed to exercise automatic control over the charging system, and also to compensate for seasonal temperature changes. The electro-mechanical regulator is factory calibrated and is not to be adjusted.

The alternator regulator is composed of two control units, a field relay and a voltage limiter, mounted as an assembly (Fig. 1). Refer to Wiring Diagram Manual, Form 7795P-73, for schematics and locations of wiring harnesses. Figs. 1 and 2, Part 31-10 show schematics of the electro-mechanical voltage regulator system.

FIELD RELAY

The field relay serves to connect the charging system voltage to the field circuit when the engine is running.

CHARGE INDICATOR CIRCUIT—LIGHT

When the ignition switch is closed, the charge indicator light, shunted with a 15-ohm resistor, allows adequate starting field current.

When the alternator builds up enough voltage to close the field relay contacts, full voltage is applied to the field, and the charge indicator light goes out.

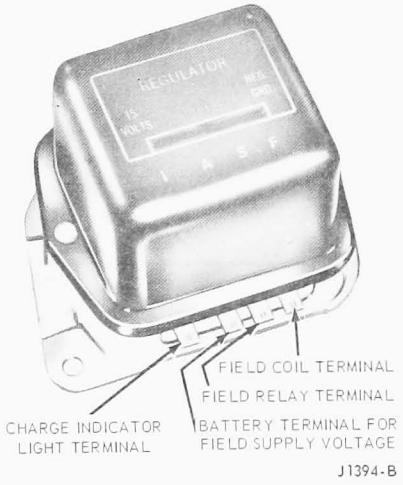

FIG. 1 Alternator Electro-Mechanical Regulator

CHARGE INDICATOR CIRCUIT—AMMETER

When the ignition switch is closed, the field relay is energized. Closing the relay contacts connects the battery and alternator output to the field through the voltage limiter contacts.

VOLTAGE LIMITER

The temperature compensated voltage limiter is a double contact unit. Voltage limiting is accomplished by controlling the amount of current supplied to the rotating field.

TESTING

Refer to the Ford Car and Truck Diagnosis Manual for regulator diagnosis procedures.

Use the Rotunda ARE 20-22 tester or the Rotunda ARE 27-38 tester to test the electro-mechanical regulator. Use the Rotunda ARE 27-38 tester or a voltmeter for the following tests.

VOLTAGE REGULATOR CALIBRATION TEST

The alternator belt tension must be adjusted within specification, and the charging system electrical connections must be clean and tight before testing the regulator.

TEST PROCEDURE

Connect the voltmeter positive lead to the battery positive terminal, and the negative lead to the battery negative terminal. **Turn off all electrical loads.** Then, check and record the voltmeter reading. Connect the red lead of a tachometer to the distributor terminal of the coil and the black tachometer lead to a good ground.

Place the transmission shift lever in the neutral or park position and start the engine. Increase the engine speed to 1800-2200 rpm for 2 or 3 minutes. Check and record the voltmeter reading. It should be 1 to 2 volts higher than the first reading. This is the regulated voltage reading. If the reading is less than 1 volt or greater than 2 1/2 volts, replace the voltage regulator. If the reading is between 1 and 2 volts, turn on the headlights and heater blower. The voltage should not decrease more than 1/2 volt from the regulated voltage reading. Replace the regulator if the voltage drop is greater than 1/2 volt below the regulated voltage.

ADJUSTMENTS

ELECTRO-MECHANICAL REGULATOR

The electro-mechanical regulator is factory calibrated and sealed and is not to be adjusted. If the regulator does not operate as specified in the Voltage Regulator Calibration Test, it must be replaced.

REMOVAL AND INSTALLATION

ALTERNATOR REGULATOR

1. Disconnect the battery ground cable.
2. Remove the regulator mounting screws.
3. Disconnect the regulator from the wiring harness.
4. Connect the new regulator to the wiring harness.
5. Mount the regulator to the regulator mounting plate. The radio suppression condenser bracket mounts under one mounting screw. The ground lead mounts under the other mounting screw.
6. Connect the battery ground cable, and test the system for proper voltage regulation.

PART 31-41 Alternator Transistorized Regulator

This Information Applies To: All 70, 90 and 105-Ampere Alternator Regulators

COMPONENT INDEX	Page	COMPONENT INDEX	Page
ADJUSTMENTS	41-04	SPECIFICATIONS	41-05
DESCRIPTION AND OPERATION	41-01	TESTING	41-04
REMOVAL AND INSTALLATION	41-05		

DESCRIPTION AND OPERATION

ALTERNATOR TRANSISTORIZED REGULATOR

The transistorized voltage regulator (Fig. 1), controls the alternator voltage output in a similar manner to an electro-mechanical voltage regulator, by regulating the alternator field current. The regulation is accomplished electronically with the use of transistors and diodes rather than by a vibrating armature relay. The voltage sensing element is a zener diode which has the characteristic of suddenly changing its resistance when a specified voltage is reached. The field relay (Fig. 2) is still used, but it is mounted separately from the voltage regulator.

Figs. 3 and 4 show schematics of the transistorized voltage regulator system.

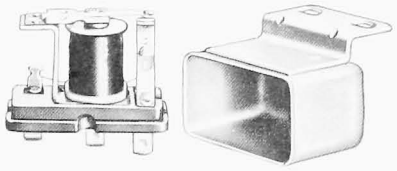

J 1323-A

FIG. 2 Field Relay—Transistorized Regulator

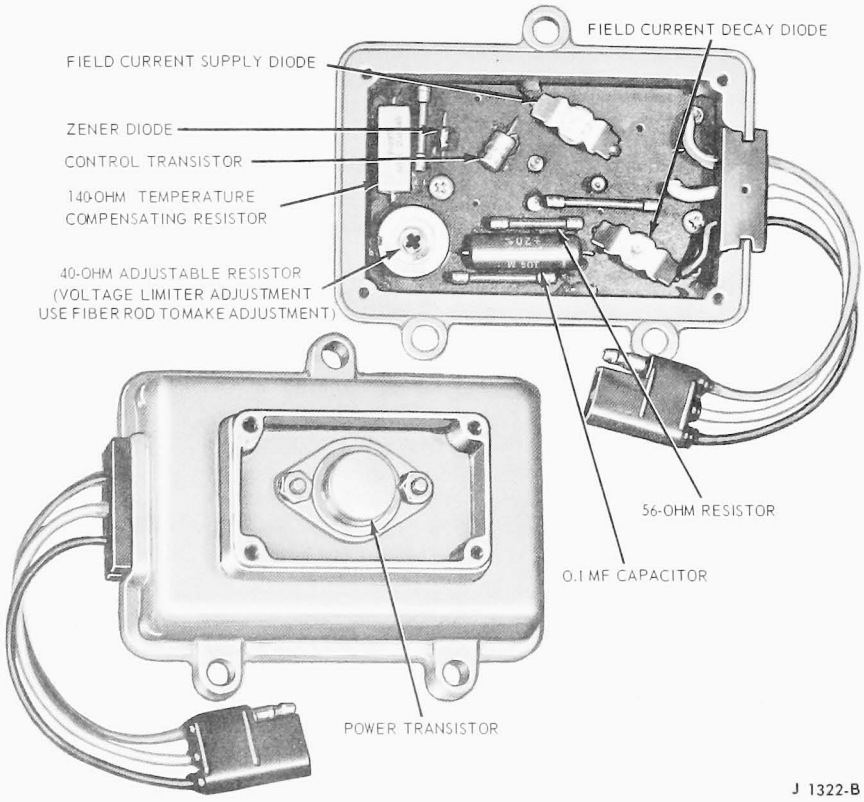

J 1322-B

FIG. 1 Transistorized Voltage Regulator

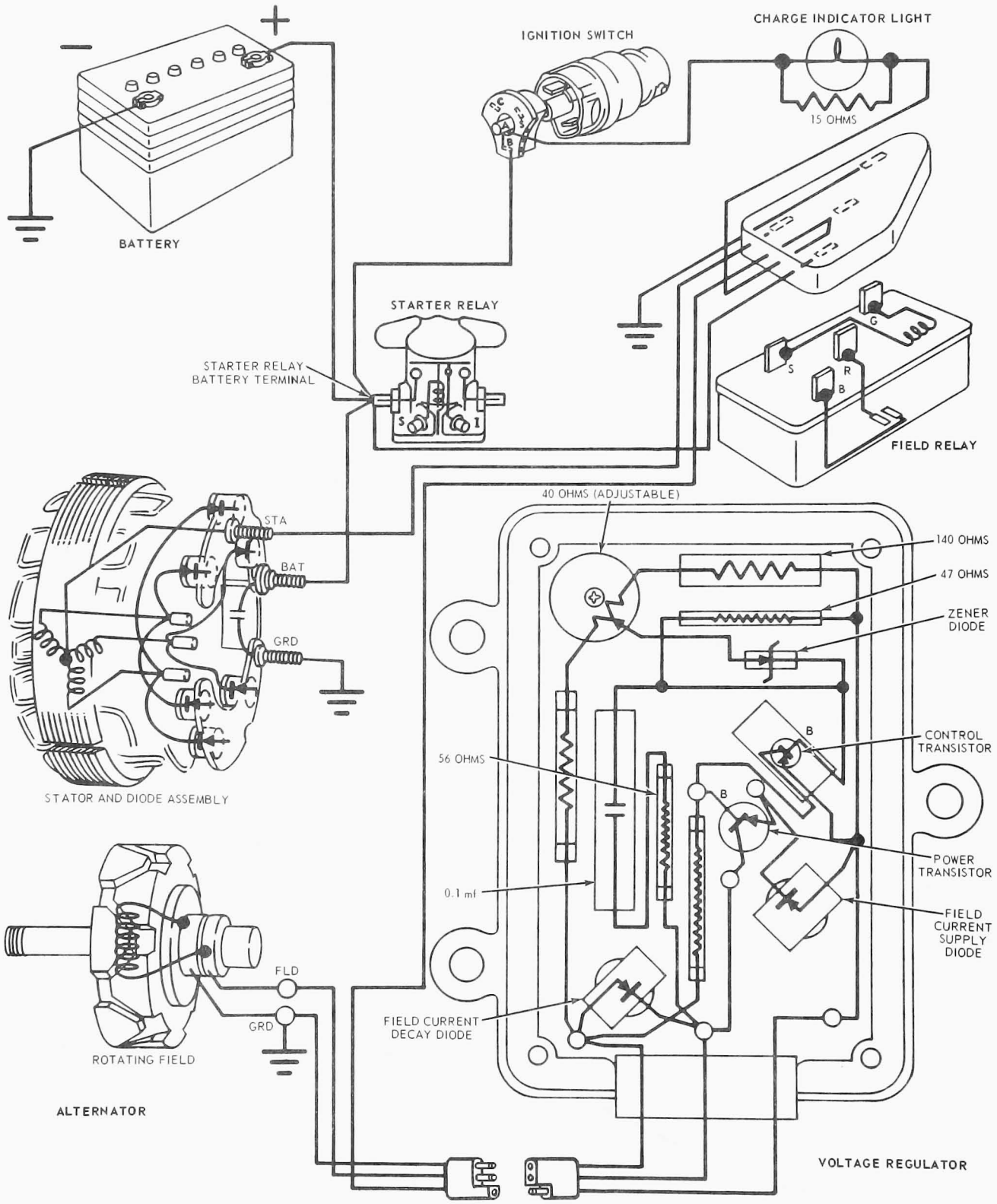

FIG. 3 Alternator System with Transistorized Voltage Regulator and Charge Indicator Light

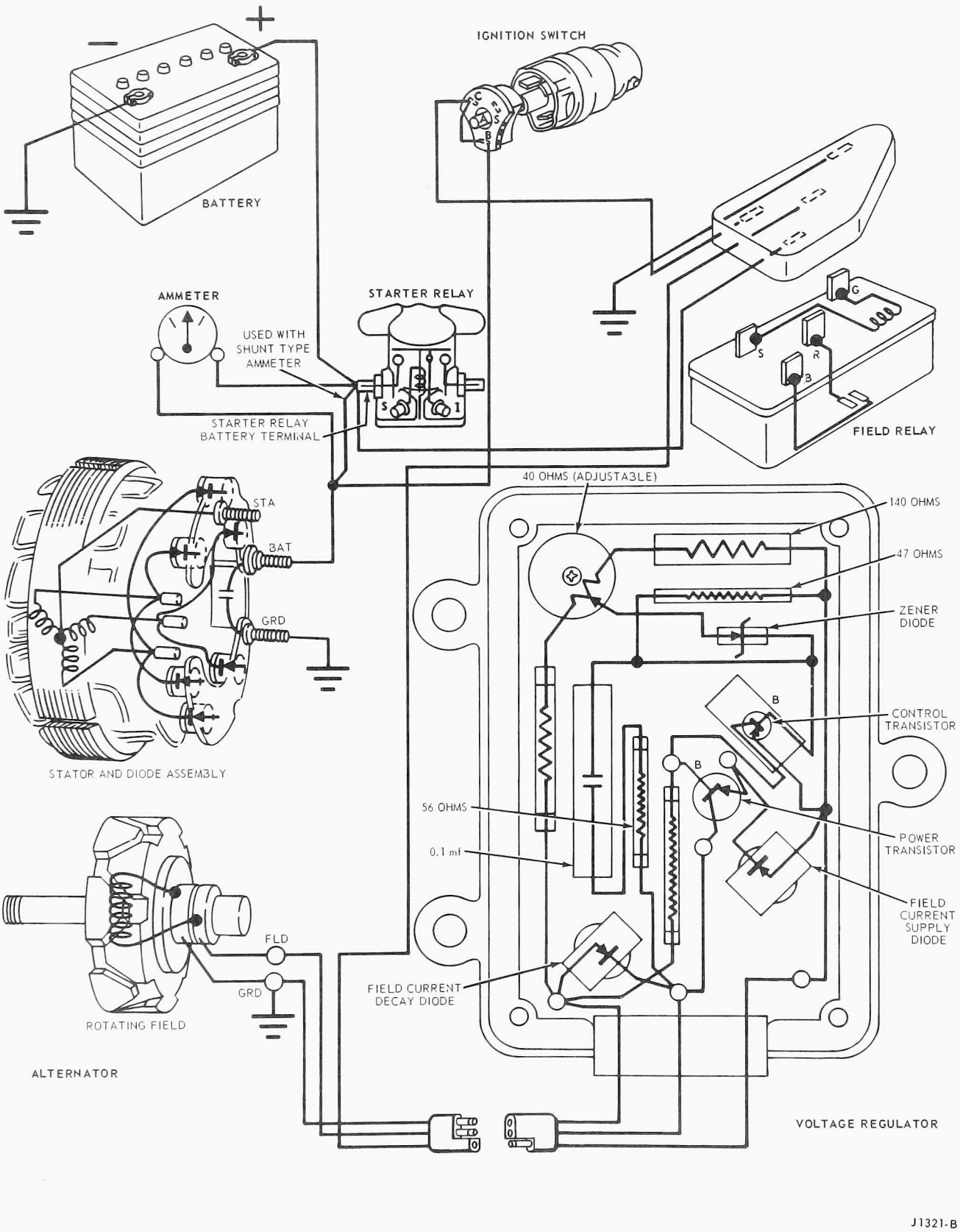

FIG. 4 Alternator System with Transistorized Voltage Regulator and Ammeter

TESTING

ALTERNATOR TRANSISTORIZED REGULATOR

Use only the Rotunda ARE 27-38 tester for transistorized regulator testing.

VOLTAGE LIMITER TEST

Voltage limiter calibration tests must be made with the regulator operating with battery and ignition loads only.

For accurate voltage limiter testing, the battery specific gravity must be at least 1.230. **If the battery is low in charge, either charge it to 1.230 specific gravity or substitute a fully charged battery before making a voltage limiter test. See Part 31-01.**

To test the transistorized voltage regulator on the vehicle, make the test connections to the battery and tester knob adjustments as shown in Fig. 5.

1. Place the transmission in neutral or park **and apply the parking brake.**
2. Close the battery adapter switch and start the engine. Make sure that all lights and electrical accessories are off. Open the battery adapter switch.
3. Operate the engine at approximately 2000 rpm for 5 minutes. (Use a tachometer).
4. Read the voltmeter on the tester. If the voltage is within specification (Specifications Section at end of this Part), the voltage regulator and alternator are functioning normally.

FIELD RELAY TEST

Disconnect the relay connector plug. Make the connections as shown in Fig. 6. Slowly rotate the field rheostat control clockwise from the maximum counterclockwise position until the test light comes on. Observe the voltmeter reading at the moment that the light comes on. This is the relay closing voltage. If the relay closes immediately, even with the field rheostat close to the maximum counterclockwise position, depress the red button between the two meters, and repeat the test. If the closing voltage is not to specification (Specifications Section at end of this Part), replace the relay.

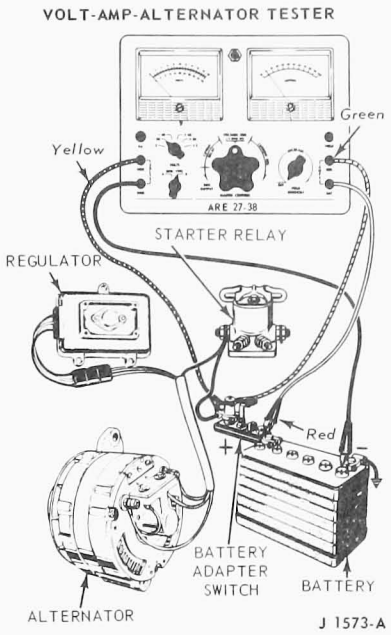

FIG. 5 Transistorized Regulator Voltage Limiter Test

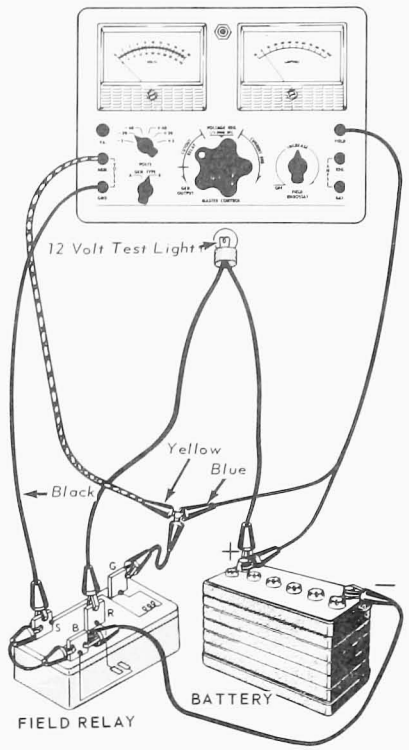

FIG. 6 Transistorized Regulator Field Relay Test

ADJUSTMENTS

TRANSISTORIZED REGULATOR

The only adjustment on the transistorized alternator regulator is the voltage limiter adjustment.

Adjustment of the transistorized voltage regulator must be made with the regulator at normal operating temperature. Remove the regulator mounting screws and remove the bottom cover from the regulator. The voltage setting may be moved up or down by adjusting the 40-ohm adjustable resistor (Fig. 1). Use a fiber rod as a screwdriver for this adjustment.

Follow the test procedure as outlined under Voltage Limiter Test (Testing in this Part), when making this adjustment.

REMOVAL AND INSTALLATION

ALTERNATOR TRANSISTORIZED REGULATOR

1. Remove the battery ground cable.
2. Remove the regulator mounting screws.
3. Disconnect the regulator from the wiring harness.
4. Connect the new regulator to the wiring harness.
5. Mount the regulator. The ground lead mounts under one of the mounting screws.
6. Connect the battery ground cable, and test the system for proper voltage regulation.

SPECIFICATIONS

REGULATOR–TRANSISTORIZED

Current Rating	Lower Stage Voltage Regulation All Models		Voltage Limiter		Field Relay		
	Temp °F	Setting	Contact Gap (Inches)	Core Air Gap (Inches)	Contact Gap (Inches)	Core Air Gap (Inches)	Closing Volts
Transistor Regulator	50	14.1–15.1	–	–	Sealed	Sealed	2.0–4.2
used with 65, 85	75	13.9–14.9			Unit	Unit	
and 105 Ampere	100	13.7–14.7					
Alternators	125	13.6–14.6					

CJ1473-B

Lighting System

GROUP 32

PART 32-01	PAGE
Lighting System General Service	32-01-01
PART 32-03	
Headlight System	32-03-01
PART 32-21	
Parking, Rear and Marker Lights	32-21-01
PART 32-41	**PAGE**
Turn Signals and Emergency Flashers	32-41-01
PART 32-61	
Interior Lights	32-61-01

PART 32-01 Lighting System General Service

Before performing any Lighting System tests, be sure the battery is in a fully charged condition and all battery cable connections are clean and tight.

A visual inspection is an important part of the Lighting System test. Check for wires with frayed or damaged insulation, loose connections and proper harness routing.

Any problems found by the visual inspection should be corrected before performing further tests of the Lighting System.

PART 32-03 Headlight System

COMPONENT INDEX	Page
ADJUSTMENTS	
Headlight Aim	03-01
DESCRIPTION AND OPERATION	
Headlights	03-01
Headlight Switch	03-01

COMPONENT INDEX	Page
REMOVAL AND INSTALLATION	
Dimmer Switch	03-03
Headlight Bulb	03-02
Headlight Switch	03-02

DESCRIPTION AND OPERATION

HEADLIGHTS

Two No. 2 type headlights are used. The lights have two filaments each, one for low beam and one for high beam, and are identified by the numeral 2 molded in the glass lens. Headlights are controlled by the headlight switch on the instrument panel and the foot-operated dimmer switch on the floorboard to the left of the clutch pedal.

HEADLIGHT SWITCH

The headlight switch (Fig. 1) is a combination three-position switch that controls the circuits to the headlights, exterior lights (except stop lights and turn signal/hazard warning lights), instrument panel lights and other interior lights. The switch shown in Fig. 1 is used on C-L500-750, F-100-350, Bronco, Econoline and W-Series. Circuits are connected to the switch by a molded multiconnector. Two circuit breakers are located in the switch: one protects the headlight circuit; the other protects the exterior light circuit as well as the horn circuit.

The interior light circuit is routed through a rheostat on the switch, which is controlled by rotating the switch control knob. This circuit is protected by a fuse in the fuse panel. The switch used on F-B-C-L 500-1100 incorporates one circuit breaker for the headlights. A 25 amp circuit breaker for auxilliary lamps is mounted in the fuse panel for L-Series and to the fuse panel mounting screw for F-B and C Series.

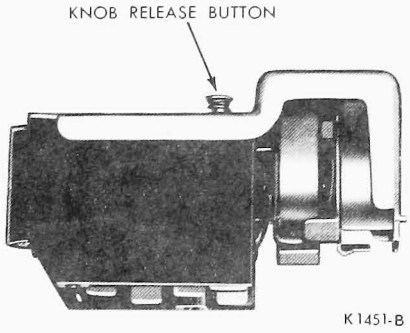

FIG. 1 Headlight Switch—C, L-500-750 and W-Series

ADJUSTMENTS

HEADLIGHT AIM

Before making any headlight adjustments, perform the following preparatory steps:

1. Remove ice or mud from under fenders.
2. See that all tires are inflated to recommended pressures.
3. Check car springs for sag or broken leaves.
4. Take into consideration faulty wheel alignment or improper tracking of the rear axle.
5. See that there is no load in the vehicle other than the driver in the front seat.
6. Check functioning of any **level-ride control.**
7. Clean lenses and aiming pads.
8. Check for bulb burn-out and proper beam switching.
9. See that light output is well towards normal new lamp value.
10. Rock the vehicle sideways.

Headlight aim adjustment should be made with the Rotunda Headlight Aiming Kit—Model TRE 540. Use the latest instructions dated June 1971.

The kit equipment can be calibrated to accommodate a slight slope in the floor, making it usable almost any place in the garage.

Each headlight is adjusted by means of two screws located under the headlight trim ring as shown in Fig. 2.

Always bring each beam into final position by turning the adjusting screws clockwise so that the headlight will be held against the tension springs when the operation is completed.

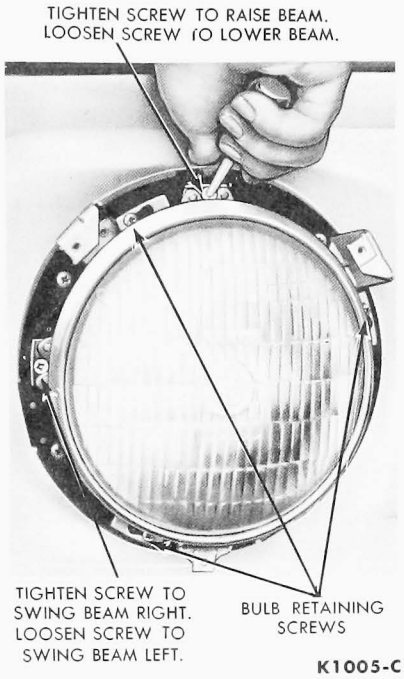

FIG. 2 Headlight Adjustment

REMOVAL AND INSTALLATION

HEADLIGHT BULB

1. Remove the attaching screws and remove the trim ring, or door (Fig. 3).
2. Remove the headlight retaining ring screws (Fig. 2), and remove the retaining ring. **Do not disturb the adjusting screw settings.**
3. Pull the headlight bulb forward and disconnect the wiring assembly plug from the bulb.
4. Connect the wiring assembly plug to the new bulb. Place the bulb in position, making sure that the locating tabs of the bulb are fitted in the positioning slots.
5. Install the headlight retaining ring (Fig. 3).
6. Place the headlight trim ring or door into position, and install the retaining screws.
7. Adjust the headlamp aim using the Rotunda TRE 540 Aimer.

HEADLIGHT SWITCH

1. Disconnect the battery ground cable.
2. Remove the control knob and shaft by pressing the knob release button on the switch housing (Fig. 1), with the knob in the full ON **position. Pull the knob and shaft assembly**

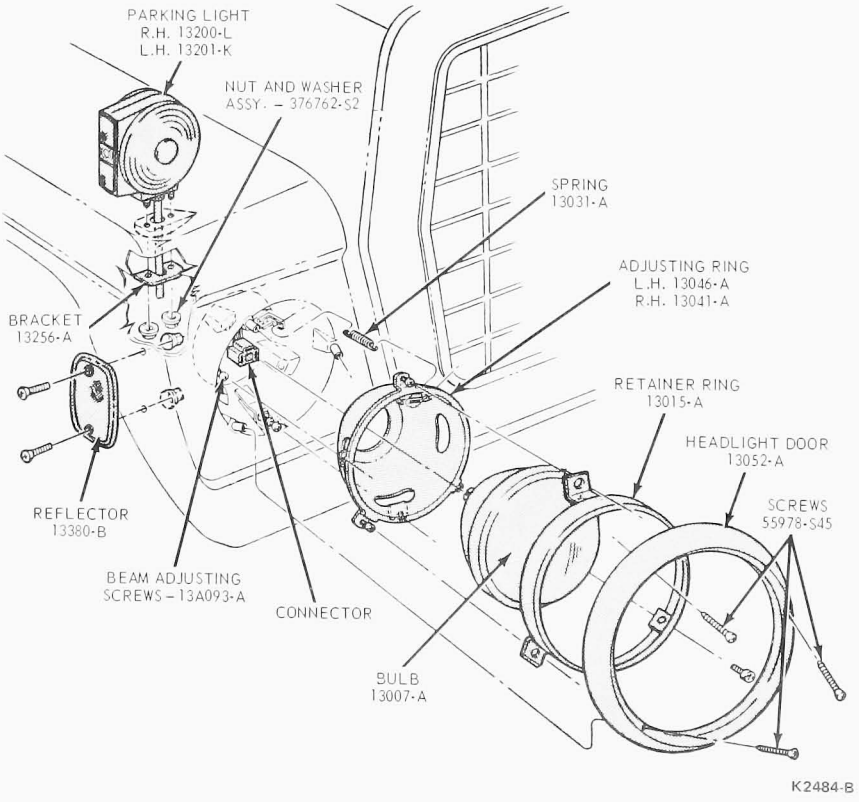

FIG. 3 Headlight and Parking Light—Typical—L Series Shown

out of the switch. Unscrew the mounting nut, remove the bezel and switch, then remove the wiring connector from the switch.

3. To install the switch, connect the wiring connector to the headlight switch, position the switch in the instrument panel, and install the bezel and mounting nut.
4. Install the knob and shaft assembly by inserting it all the way into the switch until a distinct clip is heard. In some instances it may be necessary to rotate the shaft slightly until it engages the switch-contact carrier.
5. Connect the battery ground cable.

DIMMER SWITCH

Lay the floor mat back from the area of the switch, and remove the mounting screws (Fig. 4). Disconnect the wire terminal block from the switch.

Install the switch to the floor, and connect the terminal block to the switch. Replace the floor mat.

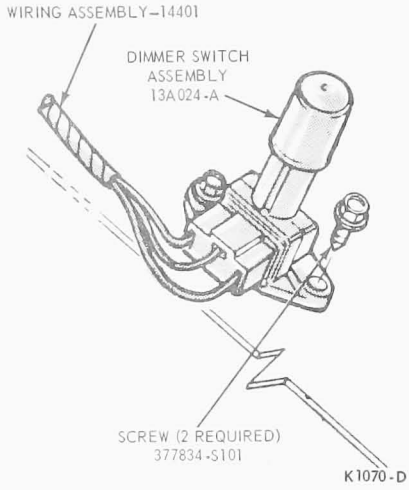

FIG. 4 Headlight Dimmer Switch

PART 32-21 Parking, Rear and Marker Lights

COMPONENT INDEX	Page	COMPONENT INDEX	Page
DESCRIPTION AND OPERATION		REMOVAL AND INSTALLATION – Cont.	
Stop Light Switch	21-01	Marker Lights	21-04
REMOVAL AND INSTALLATION		Parking Lights	21-03
Back-up Light Switch	21-07	Rear Lights	21-03
License Plate Light	21-06	Stop Light Switch	21-05

DESCRIPTION AND OPERATION

STOP LIGHT SWITCH

ECONOLINE

The Econoline mechanical stop light switch (Fig. 1) is installed in the brake pedal support bracket, just to the left of the brake pedal arm. A tab on the brake pedal arm contacts the switch plunger when the pedal is at rest, pressing the plunger into the switch assembly against the force of the plunger spring. In this position, the stop light electrical circuit is open and the stop lights remain off.

When the pedal is depressed, the tab on the pedal arm moves away from the plunger, allowing it to move outward under the force of the plunger spring. This closes the switch contacts and illuminates the stop lights.

F-100 THROUGH F-350 SERIES

F-100 through F-350 trucks have a mechanical stop light switch (Fig. 2) mounted to the brake pedal arm. When the brake pedal is at rest (brakes not applied), the switch plunger contacts a stationary stop which depresses the plunger. In this position, the switch is open and no voltage is supplied to the stop light. When the pedal is depressed to apply the brakes, the switch moves with the pedal arm away from the stationary stop. This allows the switch plunger spring to extend the plunger and close the switch contacts, illuminating the stop lights.

F AND B-500 THROUGH 7000 SERIES AND BRONCO

The mechanical stop light switch assembly, installed on the pin of the brake pedal arm, straddles the master cylinder push rod, but is not attached directly to the push rod (Fig. 3). The switch assembly moves with the pedal arm when the brake pedal is depressed.

The switch actuating pin is held by spring pressure against the rear end of the push rod. Because of the slight clearance between the eye of the master cylinder push rod and the brake pedal arm pin, the pin and the switch move forward slightly before the push rod moves when the pedal is depressed. This relative movement between the switch and the end of the push rod moves the actuating pin rearward in the switch, closing the switch contacts and completing the circuit to the stop lights.

When the brake pedal is released, the switch moves rearward in relation to the push rod. The spring in the switch returns the actuating pin to its normal position, opening the switch contacts and interrupting the circuit to the stop lights.

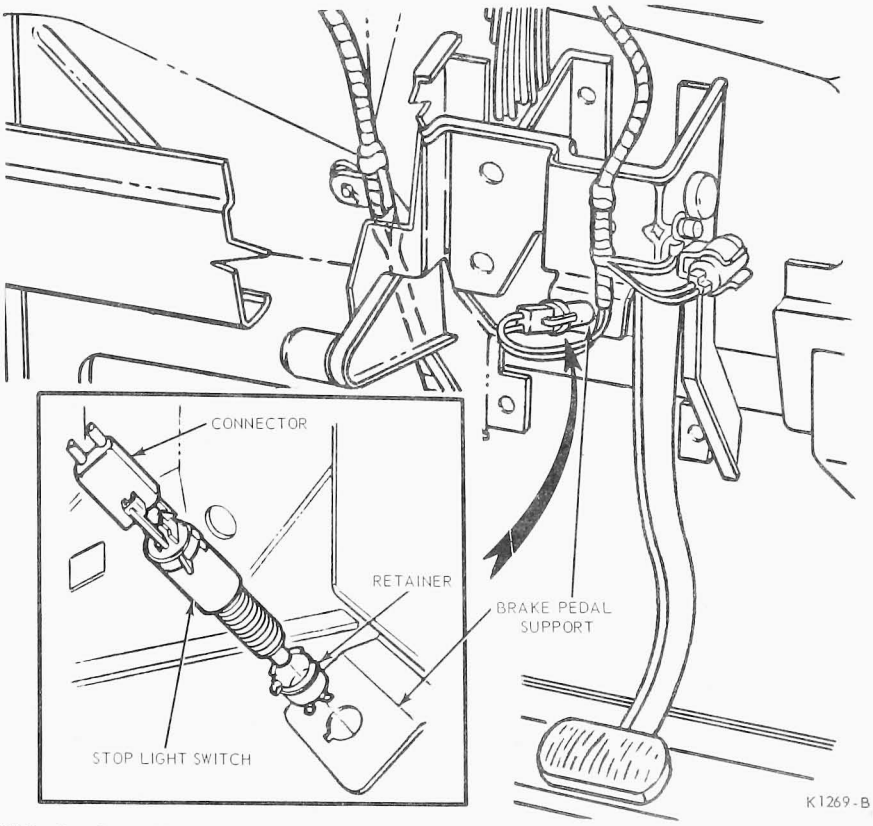

FIG. 1 Stop Light Switch—Econoline

ALL MODELS WITH AIR BRAKES

F-500 through F-750 trucks and school buses with air brakes have an air pressure sensing stop light switch mounted to the air brake control valve on the suspended brake pedal support (Fig. 3).

Tilt-cab trucks with air brakes have an air pressure sensing stop light switch at the air manifold on a frame crossmember under the cab.

On F-700, F-750 and C-Series tractor-trailer air brake systems, an air pressure sensing stop light switch is mounted on a tee-fitting at the double check valve port for the tractor protection valve service line.

The L-Series air brake systems have two stop light switches, one for the service line and one for the emergency line. The switches are threaded into elbow fittings which are, in turn, threaded into pressure ports of the air brake manifold. The manifold is mounted on the engine side of the dash panel.

L-AND C-SERIES WITH HYDRAULIC BRAKES

On L-and C-Series trucks, a pressure sensing stop light switch is mounted on a junction block in the brake hydraulic line. The stop light switch closes the circuit to a relay which, in turn, completes the circuit to the stop lights. The relay is located on the inner side of the dash panel behind the instrument panel.

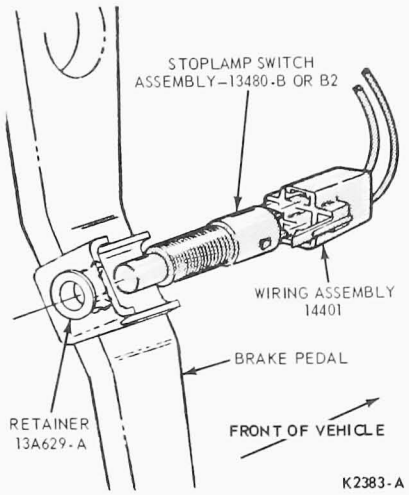

FIG. 2 Stop Light Switch—F-100 through F-350

VACUUM OR AIR OVER HYDRAULIC BRAKES

Tilt-cab and cab-over-engine trucks with vacuum or air assisted hydraulic brakes have a hydraulic pressure sensing stop light switch at the brake line junction block on the frame left side rail.

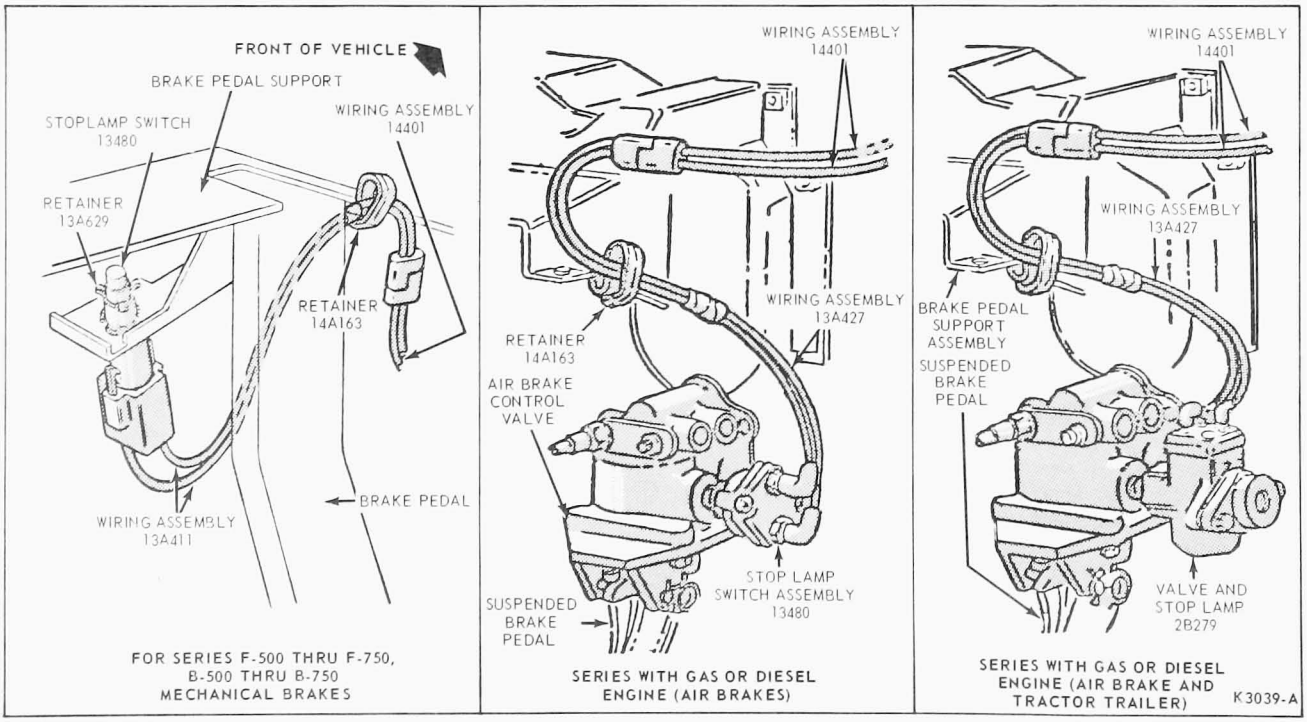

FIG. 3 Stop Light Switch

REMOVAL AND INSTALLATION

PARKING LIGHTS

F-100 THROUGH F-350 SERIES

If light body replacement is required, remove the light assembly by disconnecting the lead wire at the connector plug and removing the mounting nuts. When installing the Econoline or F-100 through 350 light assembly, secure the light ground wire under one mounting nut (Figs. 4 and 5). On the Bronco, secure the ground wire to the grille with a screw. To disassemble the light assembly or to replace a bulb, use the following procedure.

1. Remove the retaining screws and lens.
2. Push in on the bulb and turn it counterclockwise to remove it from the socket. Note the position of the locking pins in the base of the bulb during removal, for reference in installation.
3. Install the new bulb by inserting the bulb with locking pins in the proper position, pressing the bulb inward and rotating it clockwise to lock the bulb in its socket.
4. Hold the lens in position, and install the retaining screws.

500 THROUGH 7000 SERIES

To replace the bulb, remove the four screws and remove the lens from the light body (Fig. 6), press the bulb in and turn clockwise to remove it from the socket. After installing the new bulb, install the lens and retaining screws.

To remove the light body, disconnect the lead wire at the connector plug, remove the mounting nuts from the two mounting studs and withdraw the light and wire assembly from the vehicle (Fig. 6).

On conventional models, the plug connection is in the engine compartment behind the radiator support. The wire will have to be drawn through a grommet in the fender.

On C.O.E. and tilt cab models, the plug connection comes out of a wiring harness on the inner side of the dash panel. The wire will have to be drawn through a grommet in the floor pan.

When installing the light body, locate the reinforcement, the pad and the spacer as shown in Fig. 6.

REAR LIGHTS

F-100 THROUGH F-350 STYLE SIDE PICK-UP, BRONCO AND ECONOLINE

To replace a bulb and/or lens of the combination tail light, stop light and back up light (Figs. 7 and 8), remove the tail light door (if so equipped) and remove the screws that retain the lens to the light body. If replacing the bulb, turn the bulb counterclockwise and remove it from the socket. Install the gasket, lens, and retaining screws. Install the tail light door. The light body can be removed after first removing the door and lens as described above. Remove the light body-to-vehicle retaining screws, withdraw the light body from the vehicle, and disconnect the lead wires at the connectors (Figs. 7 and 8).

F-100 THROUGH F-350 FLARE SIDE PICK-UP

The bulbs in the rear light body can be replaced by removing the lens (4 screws).

The rear light body mounting studs and nuts retain both the rear light body and the side marker bracket to the light bracket on the vehicle (Fig. 9).

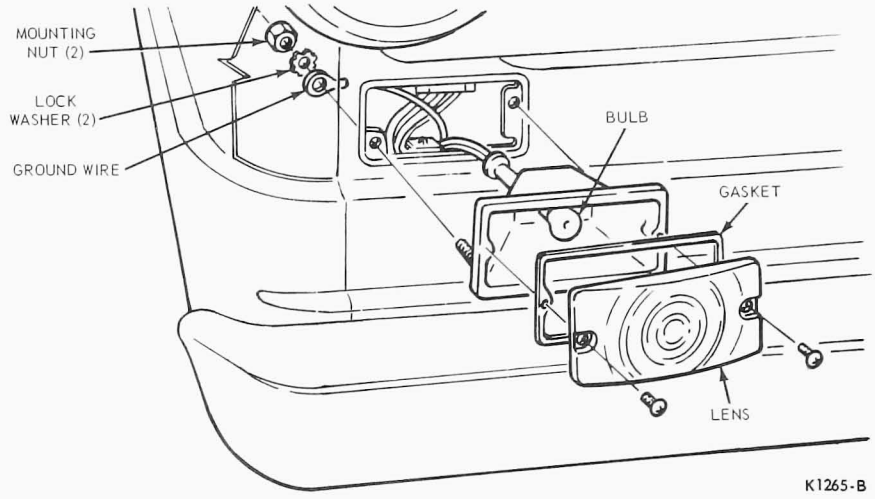

FIG. 4 Parking Light—Econoline, Typical of Bronco

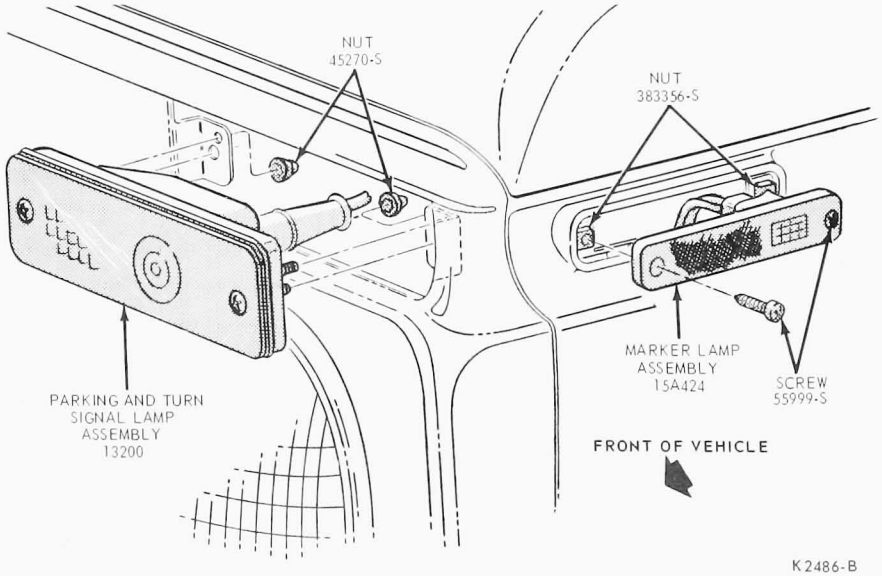

FIG. 5 Parking Light and Side Maker Light—F-100 through F-350

Therefore, the side marker and bracket assembly are dismounted from the light bracket when the rear light body is removed.

After removing the light body from the light bracket, disconnect the two connectors (red-black stripe wire and wire with green insulator) inside the frame side rail (Fig. 9). Unhook the wires from the retaining clip and pull the wires out through the grommets. Insert the studs of the replacement light body into the holes of the light mounting bracket, mount the side marker and bracket assembly and the ground wire to the studs and tighten the stud nuts. When routing the wires through the grommets, be sure to set the split line of the grommets in vertical position.

ALL TRUCKS EXCEPT E-AND U-100 AND PICK-UP

To replace a bulb, remove the lens and gasket (four retaining screws), turn the bulb counterclockwise and remove it from the socket.

To remove the light body, trace the lead wires along the frame side rail to the connector plugs and disconnect the wires at the connectors. Remove the bracket-to-side rail mounting nut that also holds the wire retaining clip to the bracket mounting bolt (Fig. 10). Remove the clip from the bolt and slide it off the wires. Pull the wires through the grommet in the side rail. Remove the light body-to-bracket mounting nuts and remove the light and wire assembly from the vehicle.

When installing the light body, route the lead wires through the hole in the bracket and the grommet in the side rail as shown in Fig. 10.

MARKER LIGHTS

F-100 AND F-250 STYLE SIDE PICK-UP, BRONCO AND ECONOLINE

Replacement of the bulb, the light assembly, or the socket and wiring assembly requires removal of the light assembly from the side of the vehicle (2 screws) as shown in Fig. 8. Disengage the bulb socket from the rear of the light assembly by turning clockwise. With the socket disengaged the light bulb can be replaced. If the socket and wiring assembly is to be replaced, disconnect the wiring at the connector and ground screw.

F-100 THROUGH F-350 FLARE SIDE PICK-UP

If only the side marker is being serviced, it can be removed from the bracket (2 retaining screws) as shown in Fig. 9. Disengage the bulb socket from

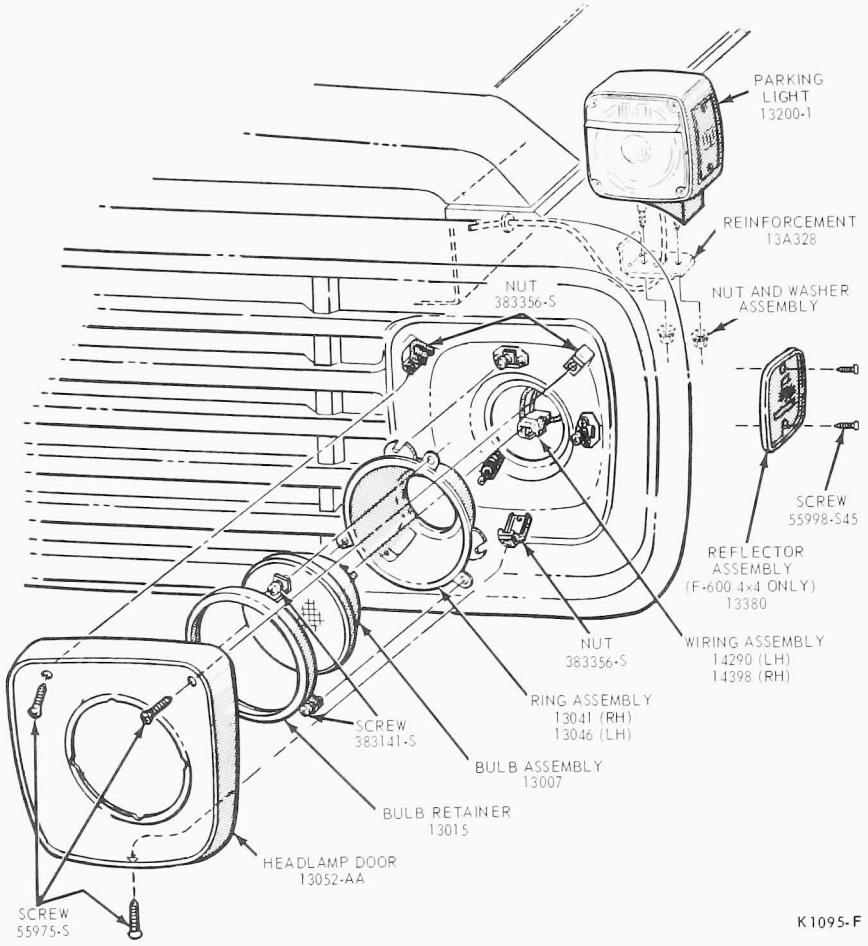

FIG. 6 Headlight, Parking and Turn Signal Lights—Typical 500 through 9000 Series

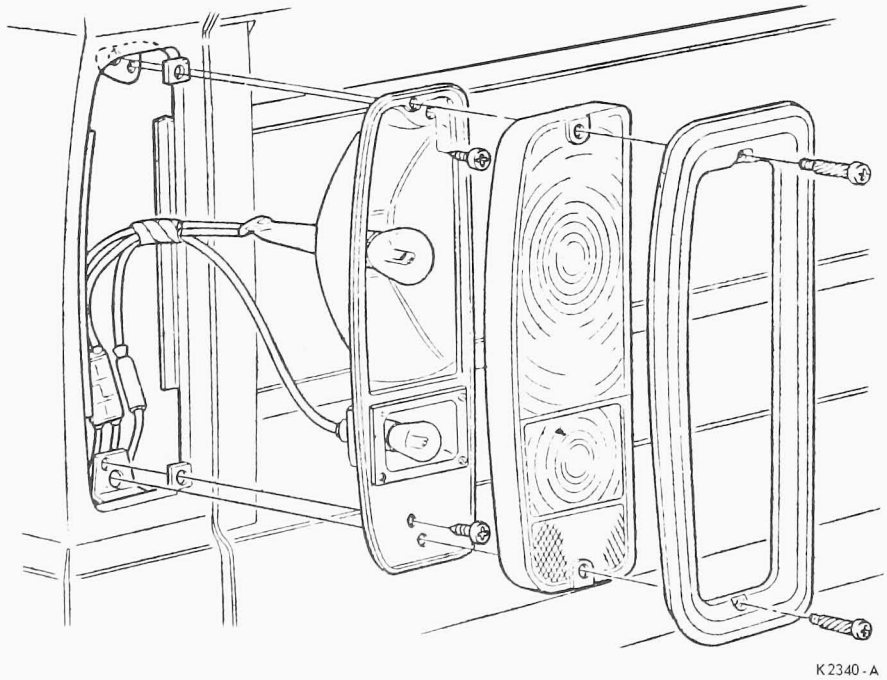

FIG. 7 Rear Light—Bronco and Econoline

the rear of the light assembly by turning counterclockwise. With the socket removed from the light assembly, the bulb can be replaced. If the socket and wiring assembly is to be replaced disconnect the brown wire at the connector inside the frame side rail (Fig. 9). Unhook the wire from the retaining clip and pull it out through the grommets. Disconnect the ground wire from the rear light stud (1 nut).

When routing the replacement wire through the grommets, set the split line of the grommets in vertical position.

CAB AND PLATFORM

Depending upon the particular vehicle, marker lights vary in number and location, but are all of the same basic design.

To replace the bulb, remove the lens (two retaining screws), press in on the bulb and turn it counterclockwise.

To remove the light body, remove the retaining nuts from the two mounting studs, disconnect the lead wire from the connector and withdraw the light body and wire assembly from the vehicle.

When installing the light body, be sure that the mounting pad is properly positioned between the light body and the vehicle sheet metal.

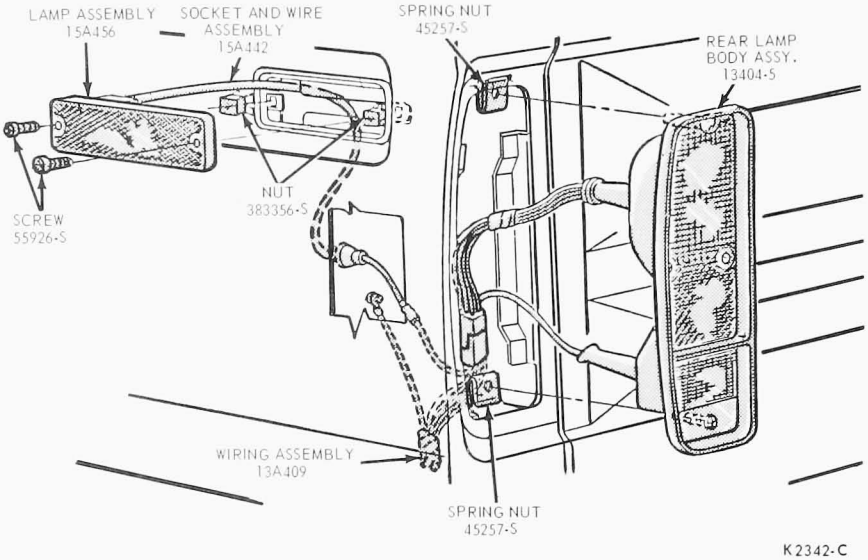

FIG. 8 Rear Light & Side Marker Styleside Pick-up

STOP LIGHT SWITCH

ECONOLINE

The Econoline stop light switch (Fig. 1) is mounted at the bottom of the brake pedal support bracket, just to the left of the brake pedal arm. Remove the switch by disconnecting the plug connector and unscrewing the switch from the retainer in the bracket. Install the switch by screwing it all the way into the retainer and connecting the plug connector.

F-100 THROUGH F-350

The F-100 through F-350 truck stop light switches are screwed into a threaded retainer on the brake pedal arm. To remove the switch, spread the plastic connector tabs and pull the electrical connector from the end of the switch body. Then unscrew the switch assembly from the retainer. To install, screw the switch assembly into the retainer fingertight, and install the electrical connector.

F-AND B-500 THROUGH 7000 SERIES AND BRONCO

To remove the stop light switch of an F-500 through F-750 truck, school bus, or Bronco with hydraulic brakes,

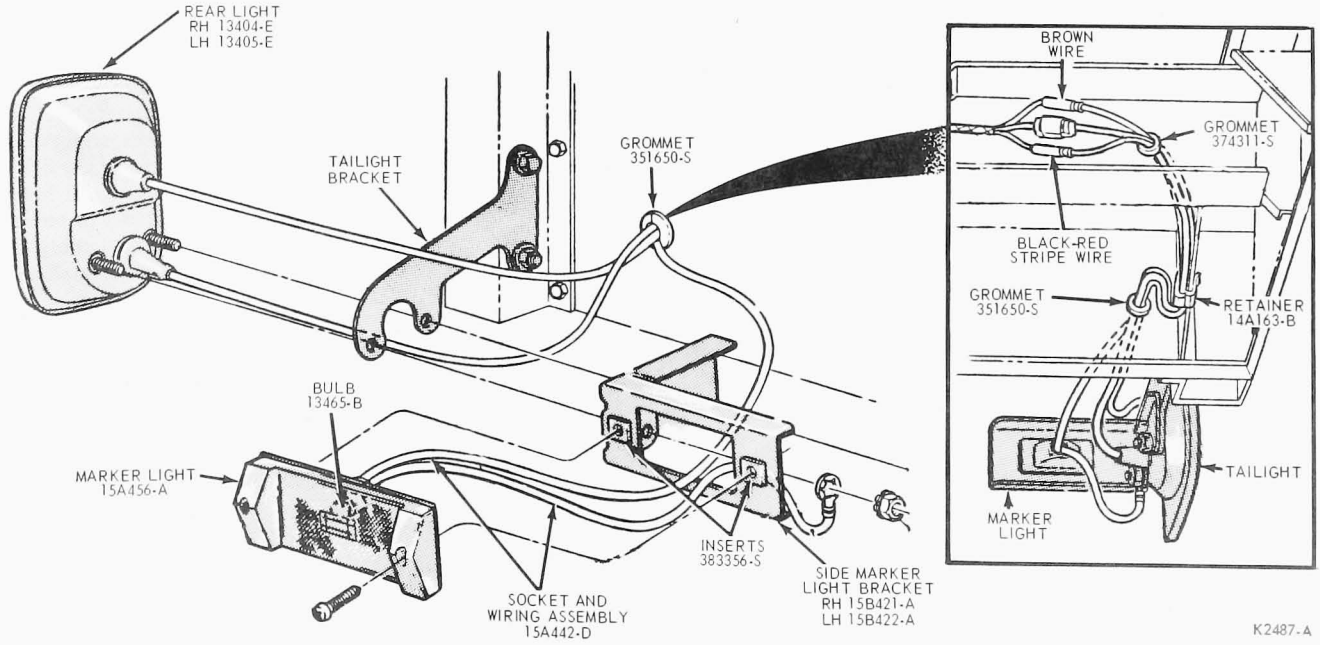

FIG. 9 Rear Lights—F-100 through F-350, Flare Side Pick-Up

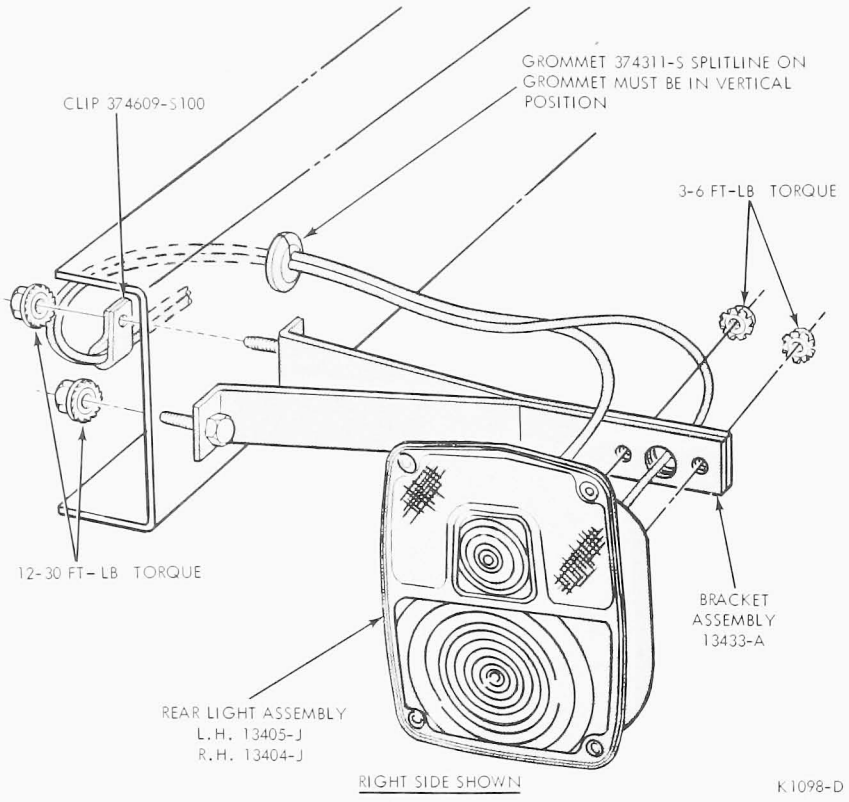

FIG. 10 Typical Rear Light Installation

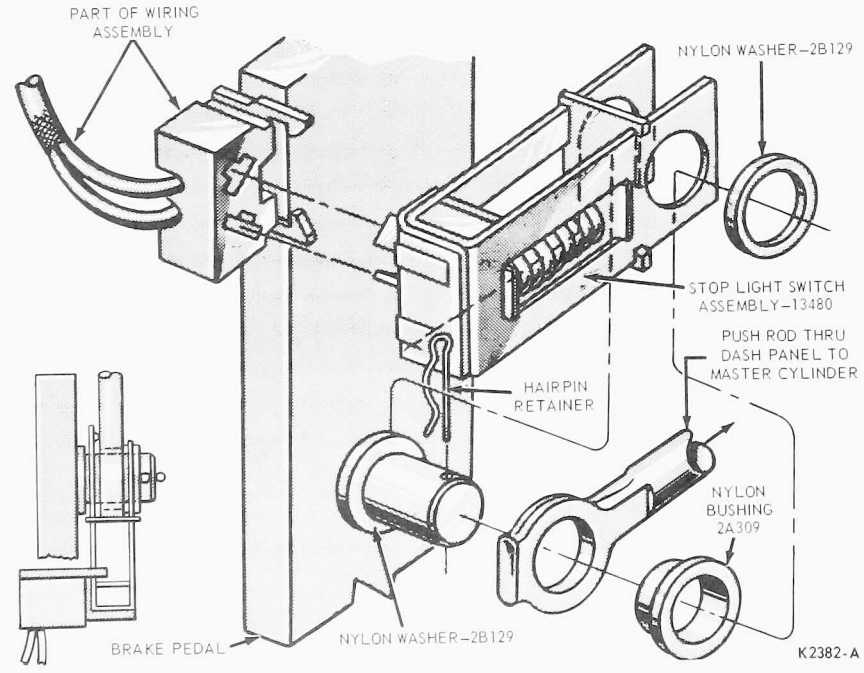

FIG. 11 Stop Light Switch—F-and B-500 through 750 Series and Bronco

disconnect the switch wiring connector under the instrument panel. Remove the push rod eccentric bolt and nut from the brake pedal arm, and remove the switch (Fig. 11). Remove the two nylon bushings from the push rod eye. To install the switch, coat the two bushings with lubriplate and position them in the push rod eye. Position the switch over the end of the push rod, and install the eccentric bolt and nut. Adjust the brake pedal free travel (Group 12).

PRESSURE SENSING STOP LIGHT SWITCH

To remove any pressure sensing stop light switch, disconnect the wire connectors at the switch and unscrew the switch body from the pressure port. If replacing a hydraulic pressure sensing switch, have the replacement switch ready for immediate installation to minimize fluid loss. After installing the wire connectors, coat the entire switch and connectors with ESB-M4G32-A or ESB-M4G31-A sealer. Fill and bleed the brake system (Group 12). To install an air pressure sensing switch, screw the switch body into the threaded pressure port and connect the wire connectors.

LICENSE PLATE LIGHT

ECONOLINE

To replace the bulb of the Econoline license plate light assembly (Fig. 12) pull the light socket out of the assembly from inside the left rear door. Remove the bulb, install a new bulb and press the socket into the light assembly.

To replace the lens of the light assembly, remove the two screws accessible from behind the rear door that retain the assembly to the door. Pull the light socket out of the light assembly and remove the assembly from the door. To remove the lens, straighten the tabs that retain the lens to the light body. Position a new lens to the light body and bend the tabs down to retain the lens. Position the light assembly to the door and install the two retaining screws. Install the light socket.

BRONCO

1. Raise the license plate bracket and remove the screw retaining the lamp assembly to the tailgate (Fig. 13). Pull the lamp assembly down and out of the tailgate.
2. Remove the lens and bulb. If

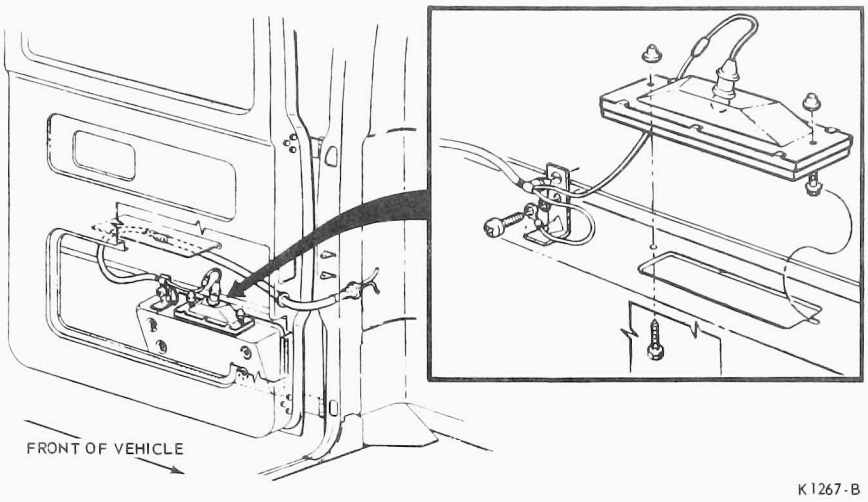

FIG. 12 License Plate Light—Econoline

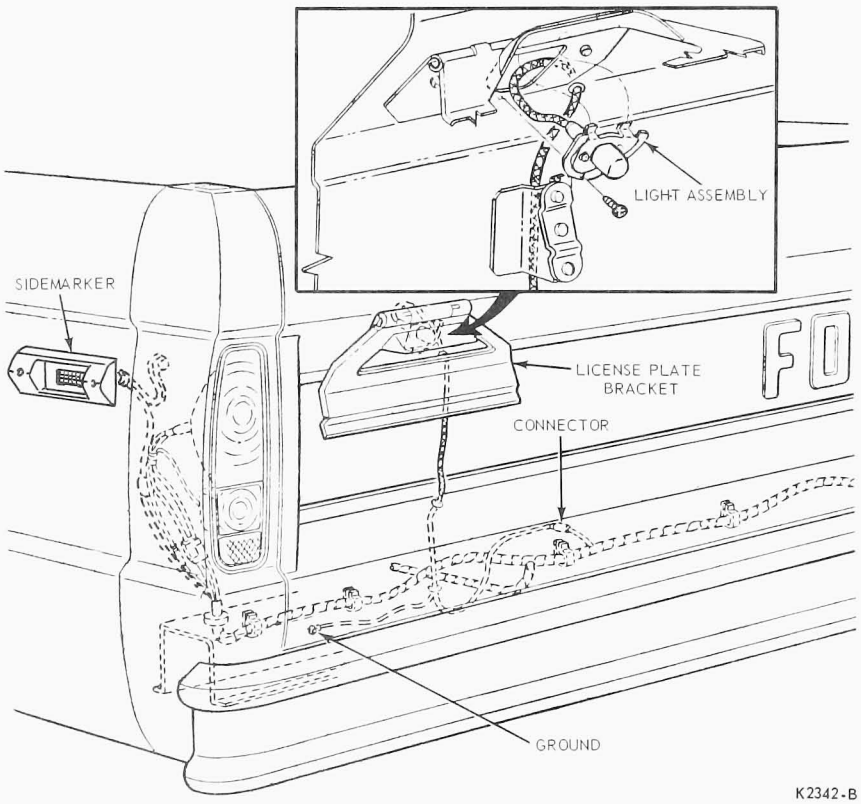

FIG. 13 Rear Lights—Bronco, Typical Econoline

replacing the light assembly, lower the tailgate for access and disconnect the light wires at the connector and the ground. Tape a pull-through wire or cord to the wires, remove the wire grommets from the holes in the tailgate, and remove the wire and light assembly.

3. If replacing the lamp assembly, transfer the weather seal to the new assembly and tape the new wires to the pull-through wire or cord. Pull the new wires and lamp assembly into position. Remove the pull-through wire or cord and connect both wires. Fit the grommets into the holes in the tailgate.
4. Install the lens and bulb. Install the screw retaining the lamp assembly to the tailgate and lower license plate bracket.

BACK-UP LIGHT SWITCH

ECONOLINE

The Econoline back-up light switch (Fig. 14) is accessible from the driver's seat. It is mounted under the steering column support plate at the lower edge of the instrument panel, adjacent to the shift tube. To remove the switch, disconnect the two wire connectors from the switch terminals, and remove the two screws fastening the switch and bracket assembly to the instrument panel. To install the switch, position the switch and bracket assembly under the steering column support plate and install the two retaining screws. Then connect the two wire connectors to the switch terminals, double wire connector at the top of the switch and single wire connector at the bottom.

If adjustment is needed, loosen the clamp screw of the switch actuator assembly on the shift tube. Shift the selector lever into Reverse and move the actuator assembly so that it depresses the switch plunger. Holding the actuator assembly in this position, tighten the clamp screw. Check the operation of the switch.

BRONCO AND F-100-350 WITH FORD 3-SPEED TRANSMISSION

The back-up light switch is mounted in the engine compartment, in a bracket secured to the forward end of the

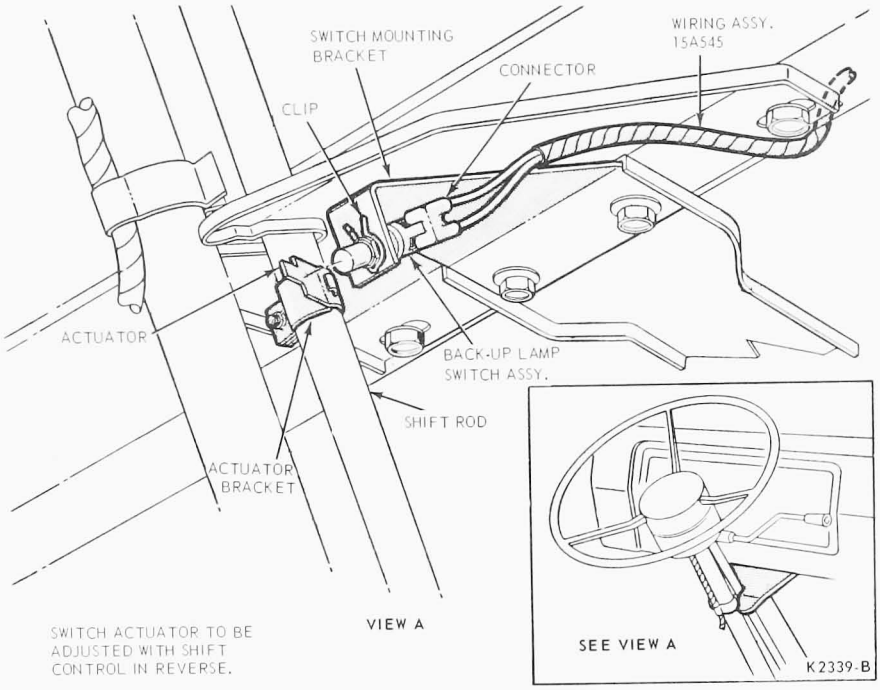

FIG. 14 Back-Up Light Switch—Econoline

steering column tube by a clamp (Fig. 15). To remove the switch, place the transmission selector lever in some position other than reverse, and disconnect the two connectors from the switch terminals. Remove the switch retaining clip. To install the switch, set it in position and install the retaining clip. Connect the wire connectors to the switch terminals.

If adjustment is needed, loosen the screw on the bracket clamp and move the bracket and switch so that the steering column shift lever will actuate the switch in reverse, but not in neutral. Tighten the clamp screw.

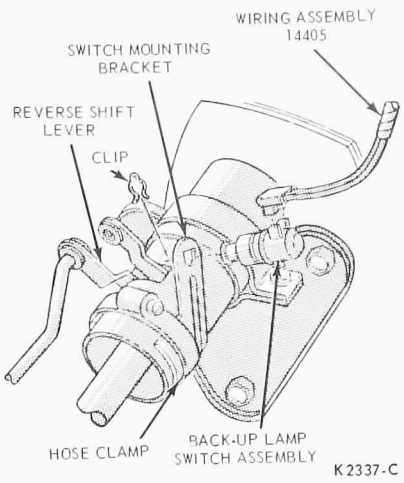

FIG. 15 Back-Up Light Switch—Bronco, Typical of F-100, F-350

ALL TRUCKS OTHER THAN BRONCO, ECONOLINE AND F-100-350 WITH FORD 3-SPEED TRANSMISSION

The back up light switch on all of these vehicles is a part of the transmission assembly. Refer to Group 16.

PART 32-41 Turn Signals and Hazard Flashers

COMPONENT INDEX	Page	COMPONENT INDEX	Page
DESCRIPTION AND OPERATION		REMOVAL AND INSTALLATION – Cont.	
Turn Signal and Hazard Flasher System	41-01	Flasher Units	41-03
REMOVAL AND INSTALLATION		Turn Signal Switch	41-01
Hazard Flasher Switch	41-02		

DESCRIPTION AND OPERATION

TURN SIGNAL AND HAZARD FLASHER SYSTEM

ALL EXCEPT BRONCO AND ECONOLINE

On F-100 through F-350 trucks, the turn signal/hazard flasher switch is located in the upper steering column hub. The turn signal switch is operated by a lever on the left side of the hub. The turn signal flasher unit is clipped to the top left of the instrument cluster housing back. The hazard flasher switch is mounted on the right side of the steering column hub.

A single transistorized flasher unit which serves both the turn signal and hazard flasher circuits is used on all trucks above the F-100 through F-350 models. The flasher unit is mounted on the brake pedal support.

Two types of turn indicators are used. One type has the front indicator lights mounted on the front fenders. The other unit uses the dual filament parking lights for the indicator lights.

To operate the turn signals, the ignition switch must be in either the ACC or ON positions. The hazard flasher system is operated independently of the ignition switch by activating the hazard flasher switch. Two flasher units are used, one for the turn signal circuit and the other for the hazard flasher signal circuit.

BRONCO

The Bronco turn signal switch is located in the steering column hub and is operated by the turn signal switch lever at the left side of the steering column. The turn signal flasher unit is mounted in a clip on the left side of the instrument panel brace, between the top of the instrument cluster and the steering column.

The Bronco hazard flasher switch is a push button in the instrument panel, just below the headlight switch. The hazard flasher signal flasher unit is clipped to the rear of the hazard switch.

ECONOLINE

The Econoline turn signal and hazard flasher signal switches are integral parts of the same switch assembly in the steering wheel hub. The turn signal switch lever is at the left side of the steering column hub. The hazard flasher switch knob is a push button mounted in the right side of the hub. The turn signal flasher unit is mounted in a clip attached to the top left side of the back of the instrument cluster. The hazard signal flasher unit is clipped to the right side of the brake pedal support.

REMOVAL AND INSTALLATION

TURN SIGNAL SWITCH

BRONCO

Removal

1. Disconnect the horn and turn signal wires at the connectors located behind the instrument panel. Remove the steering column wires and terminals from the connectors with Tool No. C4AZ-17018-B, as shown in Fig. 1. **Record the color code and location of each wire before removing it from the connector plug.** Tape a pull-through wire or cord to one of the wire ends.
2. Depress the horn button or horn ring and rotate it counterclockwise to remove it. Remove the horn spring.
3. Mark the steering wheel position on the steering column. Remove the steering wheel attaching nut. Remove the steering wheel with Tool No. 3600-AA. Remove the spring from around the end of the steering shaft.
4. Turn the turn signal switch lever counterclockwise to remove it. Remove the screws and retainer that hold the turn signal switch and wire assembly to the steering column, and pull the assembly from the column. Disconnect the pull-through wire or cord from the end of the switch wire.

Installation

1. Tape the loose ends of the new turn signal switch wires to the pull-through wire or cord. Carefully pull the wires through the steering

column while guiding the turn signal switch into position. Install the switch retainer and screws.

2. Install the turn signal lever. Apply lubricant (COAZ-19584-A) to the horn brush contact plate. Position the steering wheel over the shaft spline and install so that the center spoke is as close to vertical position as the splines permit. The center spoke is located vertically below the centerline of the steering shaft. Use a new retaining nut (No. 382702-S100) and start by hand. The nut faces are symmetrical and the nut may be started with either face downward on the shaft.

Hand-torque the nut to 45-55 ft-lbs and stake the nut to the steering shaft at one point only.

3. Install the spring and the horn button or ring on the steering wheel hub.
4. Remove the tape holding the pull-through wire or cord to the switch wires. Press the switch wires into the connector blocks in their correct locations as recorded during removal. Connect the connectors. Check the operation of the switch.

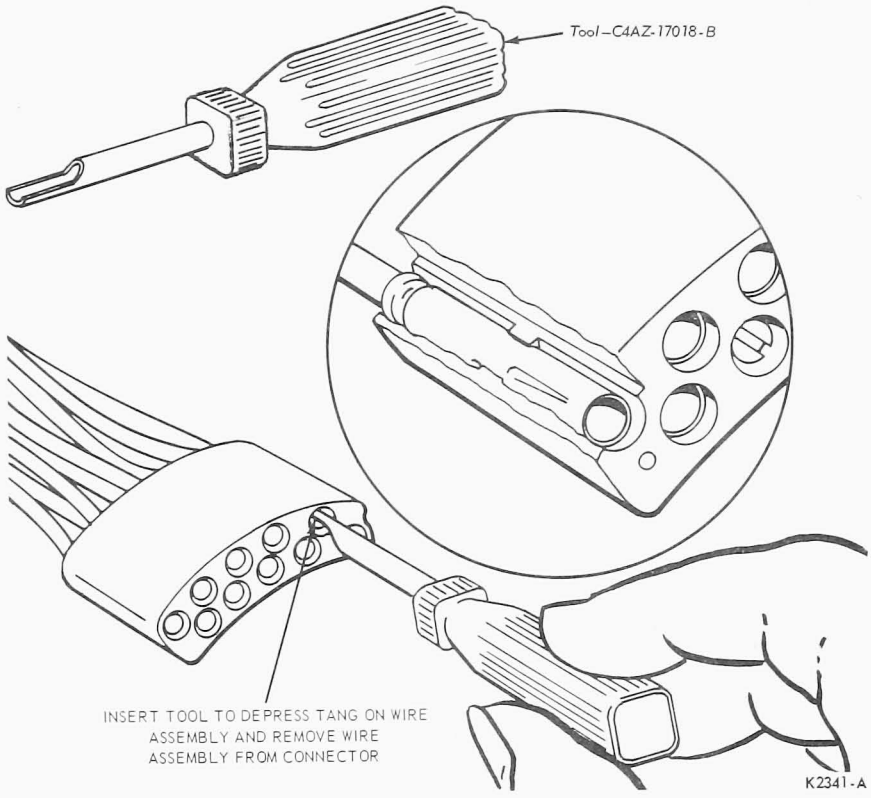

FIG. 1 Wire Terminal Removal

HAZARD FLASHER SWITCH

BRONCO

1. Loosen the set screw in the switch knob and remove the knob. Remove the nut and bezel, and remove the switch and bracket assembly from behind the instrument panel.
2. Pull the hazard flasher unit from the clip on the switch bracket. Disconnect the wire connector to the switch.
3. Connect the wire connector to the hazard flasher switch. Insert the flasher unit in the clip on the switch bracket.
4. Place the switch and bracket assembly in position, aligning the small hole in the face of the bracket with the corresponding hole in the instrument panel. Set the bezel in position and install the retaining nut. Slip the switch knob on the switch shaft and tighten the screw.

TURN SIGNAL/HAZARD FLASHER SWITCH

ECONOLINE

Removal

1. Disconnect the horn and turn indicator switch wires under the instrument panel from the connectors with Tool number C4AZ-

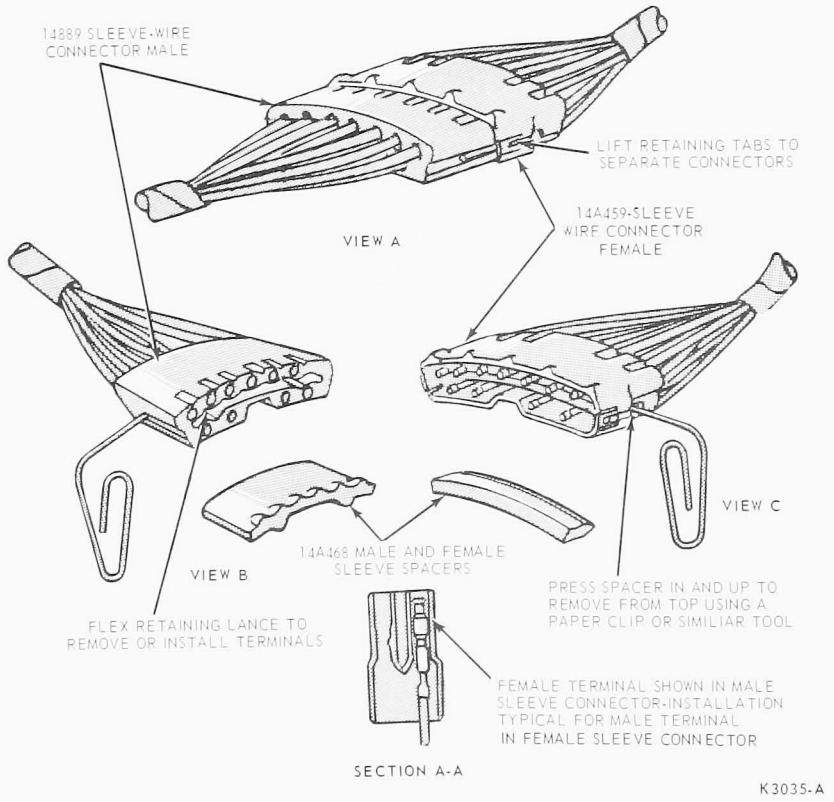

FIG. 2 Ignition Switch Wire Connector—F-100-250-350, F-100-250 4 x 4

17018-B (Fig. 1). Disconnect above wires at the clips on the steering column support.
2. Press down evenly on the horn button and turn counterclockwise until it lifts out from the steering wheel. Remove the horn button and spring.
3. Mark the steering wheel position on the steering column. Remove the steering wheel retaining nut and the steering wheel.
4. Turn the turn signal switch level counterclockwise to remove. Remove the cover that retains the turn indicator wires to the steering column.
5. Remove the two retaining screws under the steering column cup, and lift the horn contact plate and turn indicator assembly from the steering column cup.

Installation

1. Position the new horn contact plate and turn indicator switch assembly into the steering column cup, and install the retaining screws.
2. Apply lubricant (COAZ-19584-A) to the horn brush contact plate. Position the steering wheel over the shaft spline and install so that the center spoke is as close to vertical position as the splines permit. The center spoke is located vertically below the centerline of the steering shaft. Use a new retaining nut (No. 382702-S100) and start by hand. The nut faces are symmetrical and the nut may be started with either face downward on the shaft.

Hand-torque the nut to 45-55 ft-lbs and stake the nut to steering shaft at one point only. Position the spring over the steering shaft, and install the horn button.

3. Secure the turn indicator handle to the steering column flange, tape the horn wire to the turn indicator wires and secure the cover over the wires and to the steering column.
4. Route the wires through the retaining clips and connect them under the instrument panel.
5. Check the operation of the two signals and the horn.

F-100-350, F-100-250 4 X 4

Removal

1. Disconnect the battery ground cable.
2. Remove the horn switch.
3. Remove the steering wheel retaining nut and using Tool 3600AA, remove the steering wheel from the shaft.
4. Remove the turn signal switch lever by unscrewing it from the steering column.
5. Disconnect the steering column wiring connector plug by lifting up on the tabs and separating (Fig. 2) and remove the screws that secure the switch assembly to the column.
6. Remove the wires and terminals from the steering column wiring connector plug (Fig. 2). Record the color code and location of each wire before removing it from the connector plug.
7. Remove the protective wire cover from the wiring harness and remove the switch and wires through the top of the column (Fig. 3).

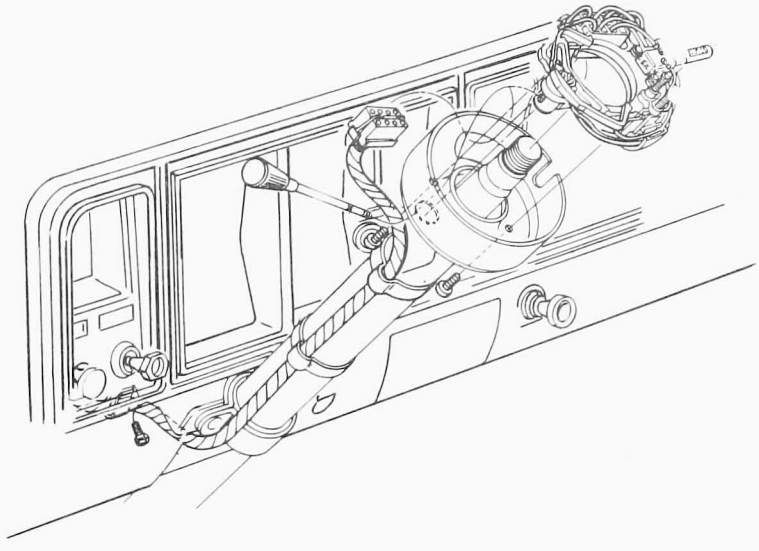

K1487-C

FIG. 3 Hub Mounted Turn Signal/Hazard Flasher Switch Removal

Installation

1. Feed turn signal/hazard flasher switch wires through area provided in column.
2. Install screws retaining switch assembly to column.
3. Install protective wire cover over wires and slide 3.25-3.75 inches into column (column lower end).
4. Install wires into steering column wire connector terminal and connect terminals.
5. Install turn signal lever and test turn signal operation, hazard signal operation and PRND12 diallight (if so equipped).
6. Install steering wheel.
7. Install horn switch.
8. Connect battery ground cable.

TURN SIGNAL/HAZARD FLASHER SWITCH (SIDE MOUNTED TO STEERING COLUMN)

1. Disconnect the multiple connector immediately below the turn signal/hazard flasher switch assembly atthe side of the steering column.
2. Disconnect the horn switch multiple connector at the top rear of the steering column hub.
3. Remove one screw and clip from the turn signal housing to release the strap retaining the assembly to the steering column, and remove the turn signal/hazard flasher switch assembly.
4. Position the switch assembly to the steering column and install the screw and clip retaining the strap to the assembly.
5. Connect the multiple connectors to the wiring at the steering column and to the horn switch, and test the operation of the switch.

FLASHER UNITS

To remove a conventional flasher unit from F-100-350 trucks, pull the flasher unit from its retaining clip and disconnect the wiring connector. Install by connecting the connector and pressing the flasher unit into the retaining clip.

To remove a transistorized flasher unit, disconnect the battery ground cable. Then remove the two screws retaining the flasher unit, disconnect the push-on terminals and remove the flasher unit. To install, position the flasher unit to the brake pedal support and install the two retaining screws. Connect the push-on connections. Connect the battery ground cable.

The Econoline instrument cluster must be removed for access to the turn signal flasher. To replace a flasher unit, disconnect the wire connector from the terminals and pull the flasher from the

mounting clip or bracket. **When replacing a turn signal flasher unit, be sure to install a new flasher unit having the same color code and number as the one removed.**

PART 32-61 Interior Lights

COMPONENT INDEX	Page	COMPONENT INDEX	Page
DESCRIPTION AND OPERATION		REMOVAL AND INSTALLATION – Cont.	
Interior Lights	61-01	Courtesy Light	61-02
REMOVAL AND INSTALLATION		Courtesy Light Switch	61-02
Cargo Light	61-02		

DESCRIPTION AND OPERATION

INTERIOR LIGHTS

Bronco's courtesy light is centrally located at the bottom edge of the instrument panel. The bulb is energized when the headlight switch knob is turned fully counterclockwise.

ECONOLINE

The overhead courtesy light and cargo light for Econoline is controlled by the headlight switch and switches located in the door jams.

The bulbs are energized when the headlight switch knob is turned fully counterclockwise and also when the door is opened.

F-100 THROUGH F-350, F-100-250 4 X 4 AND BRONCO

The courtesy light is located above the rear window and is energized when the headlight switch knob is turned fully counterclockwise.

All models of the F-100 through F-600 series are equipped with door jam switches which also control the courtesy light.

The cargo light on F-100 through F-350 series is located outside above the rear window and is controlled by a switch mounted behind the drivers door on the upper inner finish panel (Fig. 1).

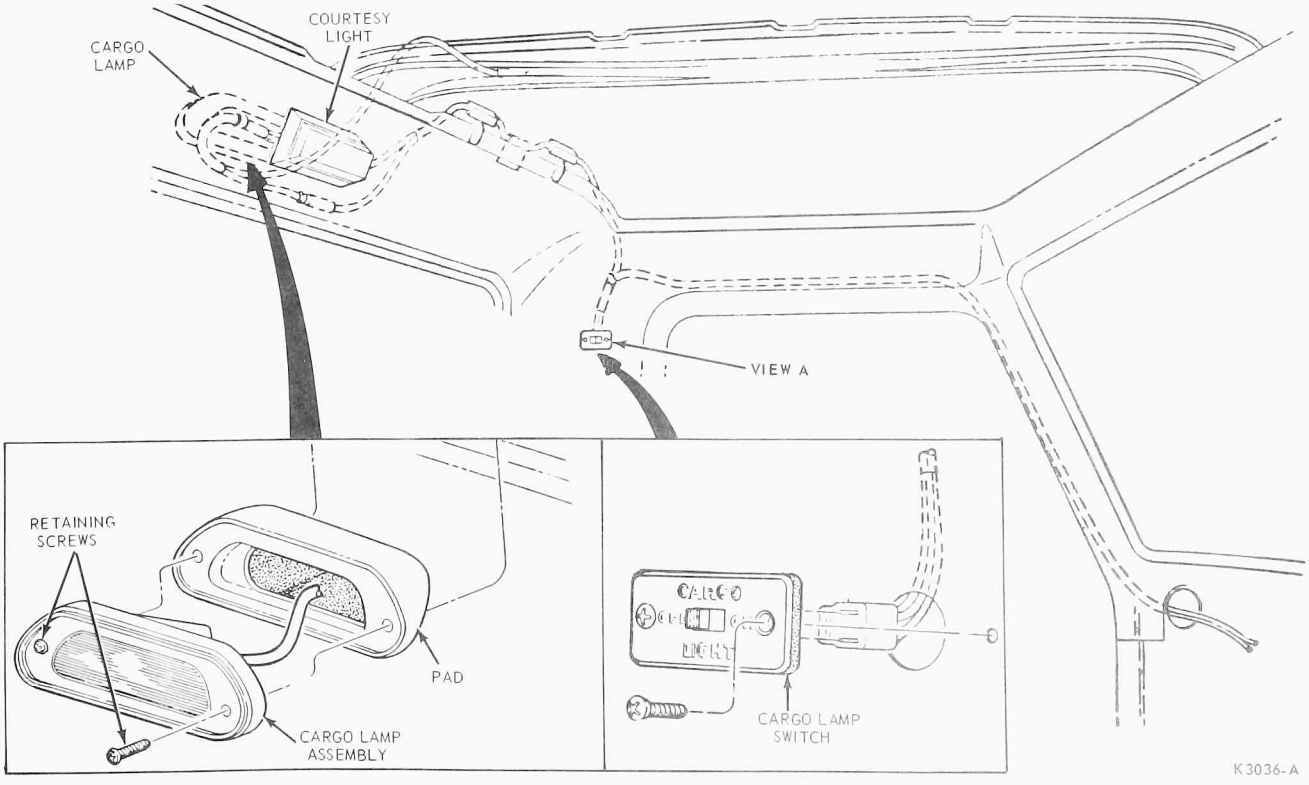

FIG. 1 Cargo Lamp and Switch—F-100-350

REMOVAL AND INSTALLATION

COURTESY LIGHT

BRONCO

Bulb replacement requires only removal of the bulb and installation of the new bulb. No lens or door is used on the Bronco courtesy light. To remove the light assembly, remove the retaining screw and disconnect the lead.

F-100-350

Remove the two lens and door retaining screws and remove the bulb (Fig. 2). To install, position the lens and door and install the two lens and door retaining screws.

CARGO LIGHT

Remove the two lens and door retaining screws and remove the bulb. To install, position the lens and door and install the two retaining screws.

CARGO LIGHT SWITCH

Remove the two screws retaining the switch assembly. Disconnect the wire connector and remove the switch.

COURTESY LIGHT SWITCH—DOOR JAM

Use a thin bladed screwdriver and carefully pry the switch from the door jam. Disconnect the wire connector and remove the switch.

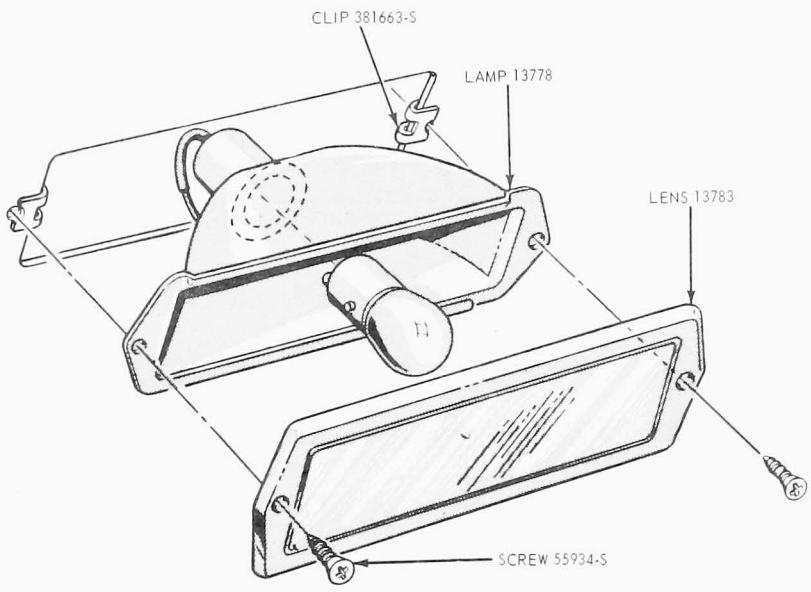

FIG. 2 Courtesy Lights—F and B Series

Instruments, Clusters and Controls

GROUP 33

PART 33-02	PAGE	PART 33-30	PAGE
Speedometer	33-02-01	Oil Pressure Indicator—Light	33-30-01
PART 33-04		**PART 33-32**	
Tachometer	33-04-01	Oil Pressure Indicator—Gauge	33-32-01
PART 33-10		**PART 33-41**	
Charge Indicator—Light	33-10-01	Temperature Indicator	33-41-01
PART 33-12		**PART 33-51**	
Charge Indicator—Ammeter	33-12-01	Instrument Cluster and Printed Circuit	33-51-01
PART 33-21		**PART 33-71**	
Fuel Indicating System	33-21-01	Ignition Switch	33-71-01

PART 33-02 Speedometer

COMPONENT INDEX Applies to Models as Indicated	All Models	Bronco	Econoline	F-100—F-350	F-500—F-750	C-Series	L-Series	W-Series
DESCRIPTION AND OPERATION								
Speedometer System	02-02							
MAJOR REPAIR OPERATIONS								
Damaged Cable Core and Casing	02-05							
Damaged Drive and Driven Gears	02-05							
Dragging Cable Core and Head	02-05							
REMOVAL AND INSTALLATION								
Speedometer Cable Assembly		02-03	02-03	02-05				
Speedometer Cable Core	02-03							
Speedometer Head		02-02	02-02	02-03	02-03	02-03	02-03	02-03
SPECIFICATIONS	02-06							
TESTING								
Speedometer System	02-02							

A page number indicates that the item is for the vehicle(s) listed at the head of the column.

N/A indicates that the item is not applicable to the vehicle(s) listed.

DESCRIPTION AND OPERATION

SPEEDOMETER SYSTEM

The speedometer is connected to the output shaft of the transmission by means of a flexible shaft (core), and a drive gear located inside the transmission. The core drives the speedometer which registers speed in miles per hour and also drives an odometer which records distance traveled in miles and tenths of a mile.

The core or flexible shaft is housed in a flexible casing. The core and casing assembly is referred to as the speedometer cable.

TESTING

SPEEDOMETER

To test the odometer accuracy, drive the truck over a measured mile. Speedometer accuracy can be checked by comparing the speedometer in question against one known to be accurate, while two trucks are moving at the same speed, or by timing the truck on a measured mile. Refer to Speedometer Calibration Tolerance Specifications, in this Part. The Ford Truck Master Parts Catalog shows the proper speedometer gears to use for various rear axle and tire size combinations.

REMOVAL AND INSTALLATION

SPEEDOMETER HEAD

BRONCO

Removal

1. Disconnect the battery ground cable and remove the instrument cluster, following instructions under Instrument Cluster Removal, Group 33, Part 50.
2. Remove the instrument cluster plate, lens and mask from the cluster.
3. Remove the speedometer retaining screws and pull the speedometer from the cluster assembly.

Installation

1. Position the speedometer assembly in the cluster housing and install the retaining screws.
2. Install the instrument cluster plate, lens and mask.
3. Install the instrument cluster and connect the battery ground cable, following instructions under Instrument Cluster Installation, Group 33, Part 50. Check the operation of the speedometer.

ECONOLINE

To remove the speedometer, remove the retaining screws at the back side of the cluster and remove the speedometer retaining screws from the front side. Pull the speedometer out from the front.

Position the speedometer to the front side of the cluster housing and install the retaining screws from the front. Install two retaining screws from the back side of the housing.

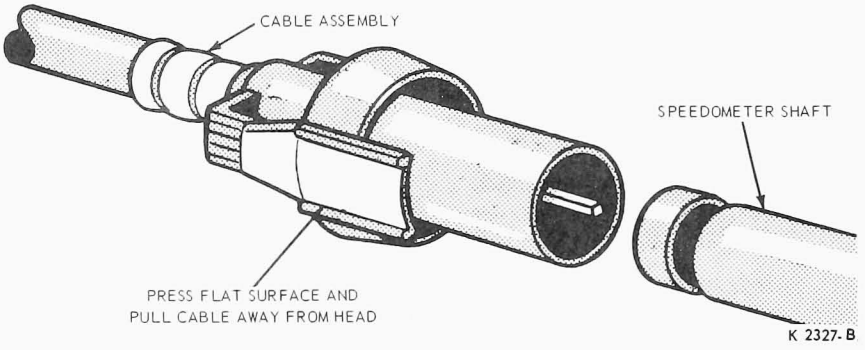

FIG. 1 Speedometer Cable Quick-Connect

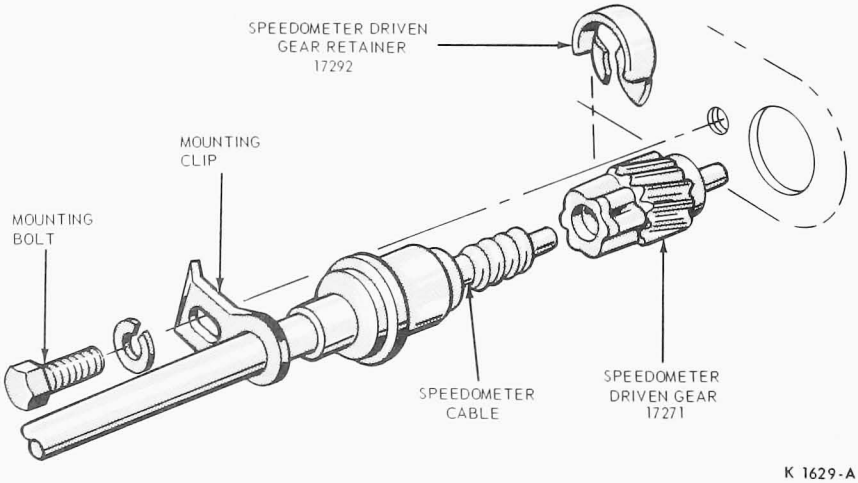

FIG. 2 Speedometer Driven Gear Mounting at Transmission

F-100 THROUGH F-350

Remove the instrument cluster as outlined in this Group. Remove the lens and mask from the cluster. Remove 2 speedometer attaching screws and remove speedometer and seal. To install, place the seal on back of speedometer, and install the attaching screws. Install the mask and lens, then the instrument cluster.

ALL TRUCK LINES EXCEPT BRONCO, ECONOLINE AND F-100 THROUGH F-350

1. Disconnect the battery ground cable.
2. Remove the instrument cluster assembly from the instrument panel.
3. Remove the retaining screws and remove the speedometer mounting plate and gauges from the cluster bezel.
4. Remove the screws retaining the speedometer to the mounting plate and remove the speedometer.
5. Position the new speedometer on the mounting plate and install the retaining screws.
6. Position the speedometer mounting plate and gauges on the cluster bezel and install the retaining screws.
7. Install the instrument cluster assembly to the instrument panel.
8. Connect the battery ground cable.

SPEEDOMETER CORE

Removal

1. Disconnect the speedometer cable (core and casing assembly) from the speedometer head (Fig. 1).
2. Pull the speedometer core out of the upper end of the casing.
3. If the core is broken, raise the vehicle on a hoist and remove the bolt retaining the speedometer cable mounting clip to the transmission.
4. Remove the shaft and driven gear from the transmission (Fig. 2). Remove the driven gear retainer, and remove the driven gear and shaft from the cable.
5. Remove the lower part of the core (if it is broken) from the lower end of the casing.

Installation

1. Position the driven gear to the casing and install the gear retainer. Install the driven gear and casing in the transmission, and install tthe retaining bolt. Lower the vehicle.
2. Determine the exact length of the old core and cut the new core so that it is 13/16 of an inch shorter than the old core. (Do not cut from the squared end of the core). Remove any burrs or frayed edges.
3. Install the tip on the core, making certain to seat the core in the bottom of the tip.
4. Place the core and tip in a crimping die, and place the die on a solid surface and strike it squarely with a hammer to crimp it.
5. Remove the crimping die.
6. Lubricate the core with cable lubricant D2AZ-19581-A (do not over lubricate). Install the core (square end first) into the upper end of the casing and push it all the way through to the transmission (Fig. 3). When the cable is nearly seated, twist it slightly to make sure that the squared end is engaged in the speedometer driven gear at the transmission.
7. Connect the cable assembly to the speedometer, being sure to eliminate any kinks in the housing and shaft. Check the operation of the speedometer.

SPEEDOMETER CORE AND CASING

BRONCO

Disconnect the speedometer cable from the speedometer head and push the cable and grommet through the opening in the floor pan or dash panel. Raise the vehicle on a hoist and disengage the cable from all retaining clips. Disconnect the cable from the transmission and connect the new cable to the transmission. Engage the new cable in the retaining clips at the marker tapes on the cable housing and route it through the opening in the floor pan or dash panel. Push the grommet in place. Lower the vehicle and connect the cable to the speedometer head.

ECONOLINE

Removal

1. Disconnect the speedometer cable and housing from the speedometer. Work the cable grommet out of the hole in the dash panel and carefully pull the cable and housing out through the front of the dash panel.
2. Raise the vehicle on a hoist and remove the bolt and lock washer retaining the speedometer cable housing clamp to the transmission (Fig. 4). Remove the cable and driven gear from the transmission. Note relationship of the cable to the body crossmember for reference during installation.
3. Disengage the cable assembly from the three clips along the flange of the underbody structural member. Work the cable grommet out of the hole in the crossmember and remove the cable assembly from the vehicle by guiding it rearward and out of the crossmember.

Installation

1. Transfer the speedometer cable driven gear and O-ring to the new cable.
2. Lubricate the cable core sparingly with B5A-19581-A lubricant and insert the cable core into the housing. Lubricate the O-ring with COAZ-19584-A lubricant. Lubricate the driven gear with graphite grease.
3. Feed the speedometer cable assembly forward through the grommet hole in the underbody crossmember, then route the cable assembly to the trasnmission (ahead of the transmission support crossmember with manual transmission; through the hole in the center of the crossmember with six-cylinder automatic transmission, or behind the crossmember with eight-cylinder automatic transmission).
4. Insert the driven gear into the transmission, rotating the cable core slightly to mesh the gears. Attach the cable housing clamp to the transmission with the bolt and lock washer to secure the cable assembly.
5. Press the cable assembly into the three flange clips at the tape bands on the cable housing. Work the cable grommet about two inches into the hole in the underbody crossmember. Guide the forward end of the cable assembly up into the underhood area where it can be reached when the vehicle is lowered.
6. Lower the vehicle and route the speedometer cable through the underhood area in the following manner (Fig. 4). The front and rear brake lines come out of the left side of the master cylinder and double back under the master cylinder. The speedometer cable assembly should pass to the left of the master cylinder. **Ahead** of both brake lines where they pass under the master cylinder and **between** both brake lines where they come out of the side of the master cylinder. From there, the cable assembly should be routed up and into the hole in the dash panel.
7. Position the cable assembly to the speedometer and install the cable housing hex nut finger tight. Then tighten the nut to the specified torque.
8. Work the cable grommet into the hole in the dash panel about one inch. Make sure that there are no

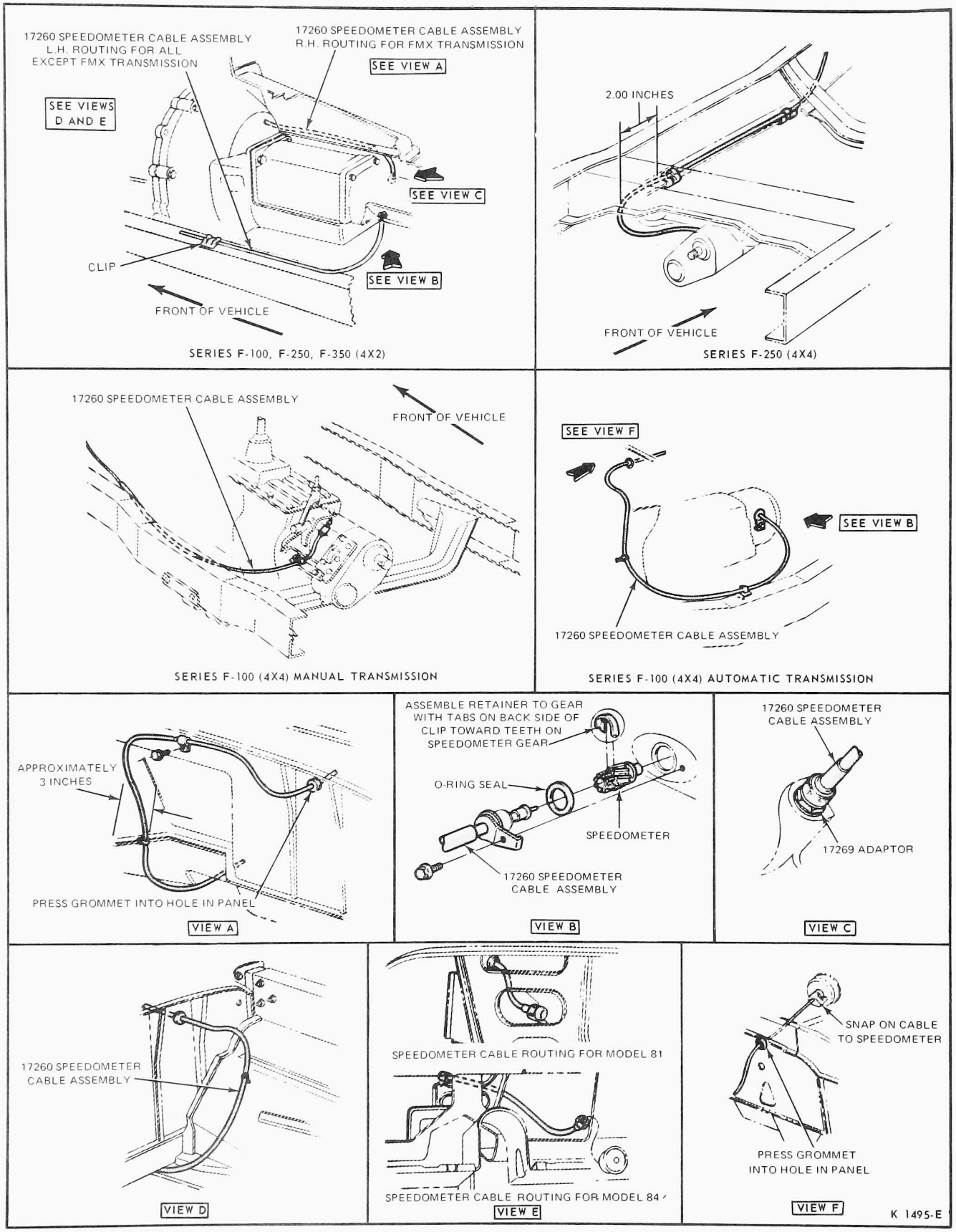

FIG. 3 Speedometer Cable Routing

sharp bends in the cable assembly. Then check the speedometer operation.

F-100 THROUGH F-350

Disconnect the speedometer cable casing from the speedometer head and push the cable and grommet through the opening in the floor pan or dash panel. Raise the vehicle on a hoist and disengage the cable from all retaining clips and/or clamps. On vehicles so equipped, work the cable grommet out of the crossmember. Note the location of the various mounting clips, clamps, bolts and nuts and their relationship to the cable for reference during installation. Disconnect the cable assembly from the transmission (Fig. 3). Remove the assembly from the vehicle.

Lubricate the cable core sparingly with B5A-19581-A lubricant and insert the core into the casing.

On vehicles where the cable is retained to the transmission by a mounting clip and bolt, transfer the driven gear and O-ring with COAZ-19584-A lubricant and the driven gear with graphite grease. Tighten the mounting clip bolt to the specified torque.

MAJOR REPAIR OPERATIONS

DRAGGING CABLE CORE AND HEAD

Before removing a speedometer head, disconnect the cable at the head and insert a short section of cable core in the head. Rotate the section of core to check for any dragging or noise. The shaft in the speedometer head should turn freely and evenly.

If a new speedometer head is being installed, examine the square drive hole for sufficient lubricant. If lubricant is needed, apply a 3/16-inch diameter ball of C5AZ-19581-A lubricant in the drive hole.

DAMAGED CABLE CORE AND CASING

1. To check for a kinked cable core remove and wipe dry. Lay the core out straight on a flat surface and roll it back and forth. Any kinks or damage will be seen. Then take an end in each hand, allowing core to hang in approximately a 9 to 12 inch loop. Rotate both ends to be sure core turns evenly.
2. Routing of the cable casing is particularly important where the cable leaves the speedometer head. The optimum routing would provide that the cable and housing take virtually no change of direction for at least a length of 8 inches from the speedometer head.
3. When installing a new cable (core and casing) it is necessary that extra care be taken to see that the new assembly is guided and routed properly to eliminate any kinks.
4. Proper lubrication of the cable core is accomplished by a light application of B5AZ-19581-A lubricant after the cable has been wiped clean. A light film is all that is required.

DAMAGED DRIVE AND DRIVEN GEARS

1. A scored, nicked or gouged driven gear is usually indicative of a damaged drive gear on those vehicles that have the drive gear integral with the transmission output shaft. The output shaft should be carefully inspected for imperfections and replaced if necessary.
2. A driven gear with two or three adjoining teeth badly scored is indicative of improper assembly procedure. The gear should be inserted in the transmission while simultaneously turning the drive shaft. This will insure initial gear engagement and prevent gear damage. **Force should never be used.**
3. Whenever a drive gear is replaced, a new driven gear should also be installed, regardless of its apparent condition.

CABLE CORE

On trucks without fittings or drive adaptors connected to the cable between the speedometer and driving end, disconnect the speedometer cable at the speedometer head.

Jack up the rear wheels, start the engine and check for speedometer core rotation at the disconnect point. If the core does not rotate, disconnect the cable from the transmission or right wheel (driving end) and check for damaged gears or drive tip. Replace as required. If the gears and drive tip are in good condition, the core is broken.

Pull the upper portion of the broken core from the driven end of the casing (at the speedometer head, fitting or drive adaptor). Measure the length of this removed part of the core in order to locate the trouble. The most likely trouble spot will be a point on the cable casing whose distance from the driven end is equal to the length of the removed core piece. Check for a crushed or broken cable or for a sharp bend at this point. Replace the cable or increase the cable radius as required.

SPECIFICATIONS

SPEEDOMETER CALIBRATION TOLERANCE SPECIFICATIONS

Vehicle	30 mph Actual Speed	60 mph Actual Speed	Odometer Measure Chart Actual 10 Mile Distance
Non-Rental	30-34 mph	60-66 mph	9.9-10.5 Miles
Rental	29-33 mph	58-45 mph	9.6-10.4 Miles

SPEEDOMETER NUT TORQUE

Cable Nut at Speedometer Head, and Drive Adaptor at Transmission or Right Front Wheel	18–25 In-Lbs
Transmission Mounting Clip Bolt Torque	3–4 1/2 Ft-Lbs

CK2492-A

PART 33-04 Tachometer

DESCRIPTION AND OPERATION

TACHOMETER SYSTEM

The tachometer used in Ford trucks is a cable driven instrument which records engine speed in Revolutions Per Minute (RPM).

Trucks equipped with the super-duty engines incorporate a mechanical governor from which the tachometer cable is driven. In trucks equipped with the heavy duty gasoline engines, the tachometer is driven from a tachometer drive gear located in the distributor assembly.

The tachometer cable is driven off of various engine components on trucks equipped with diesel engines.

REMOVAL AND INSTALLATION

TACHOMETER HEAD

From behind the instrument cluster, disconnect the cable by turning the attaching nut counterclockwise, snap the tachometer light socket out of the tachometer head and remove the two retaining nuts and bracket (Fig. 1).

TACHOMETER CABLE DRIVE

Refer to Group 23 for Tachometer Cable Drive Removal and Installation procedures.

TACHOMETER CORE

Disconnect the cable and core assembly from the tachometer and pull the tachometer core out of the casing. If the core is broken, disconnect the core and casing at the drive end and remove the lower part of the core.

To install, lubricate the core with lubricant C5AZ-19581-A (do not over lubricate). Install the core in the casing and attach the core and casing assembly.

Prior to installing the new core, check the casing for any sharp bends or kinks.

CABLE AND CORE ASSEMBLY

Disconnect the cable and core assembly from the tachometer head and from the cable drive end. Remove the retaining clips and remove the cable and core assembly.

To install, connect the tachometer cable and core assembly at the drive end and carefully route it to the tachometer head. **Be careful not to kink the cable during routing.** Install the retaining clips and check the operation of the tachometer.

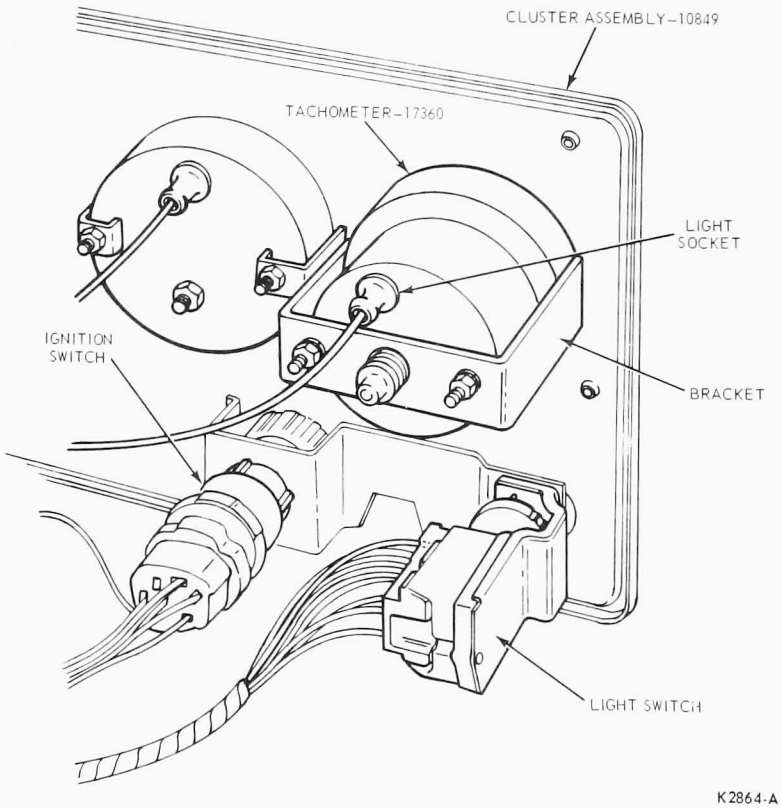

FIG. 1 Typical Tachometer Installation

PART 33-10 Charge Indicator—Light

COMPONENT INDEX	Page	COMPONENT INDEX	Page
DESCRIPTION AND OPERATION		TESTING	
Charge Indicator Light System	10-01	Charge Indicator Light System	10-01
REMOVAL AND INSTALLATION			
Indicator Bulb	10-01		

DESCRIPTION AND OPERATION

CHARGE INDICATOR LIGHT SYSTEM

A red alternator charge indicator light is used on vehicles not equipped with an ammeter. This light glows when the battery is not receiving current from the charging system.

When the ignition switch contacts are closed (switch turned on) battery current flows through the charge indicator light and 15-ohm parallel resistor, and through the regulator voltage limiter contacts to the field, and the light comes on.

When the alternator builds up enough voltage to close the field relay contacts, full voltage is applied to the field and the charge indicator light goes out.

TESTING

CHARGE INDICATOR LIGHT SYSTEM

To test the charge indicator light, turn the ignition switch on with the engine stopped. The light should come on. If it does not, the bulb is burned out, or the wiring to the light is broken.

An open resistor wire in the alternator charging system wiring harness will usually cause the charge indicator light to stay on until the engine speed is increased to several thousand rpm. This effect will be noticed each time the engine is started. In some cases the light will not go out at all.

The charge indicator light may be tested with the use of a test light containing a trade number 67 or 1155 bulb.

Disconnect the regulator plug from the regulator. Turn the ignition switch to ACC position. Touch one test probe from the test light to the ignition terminal and the other to the regulator base. The test light will come on if the circuit is in proper working order. If the 15 ohm resistor or circuit is open, the indicator light will operate at full brightness and the test light will be out.

REMOVAL AND INSTALLATION

INDICATOR LIGHT

To remove the indicator bulb, reach up behind the instrument cluster, turn the bulb and socket assembly 1/4 turn counterclockwise and remove. To install, position the new bulb and socket assembly to the printed circuit and turn it clockwise 1/4 turn.

PART 33-12 Charge Indicator—Ammeter

COMPONENT INDEX	Page	COMPONENT INDEX	Page
DESCRIPTION AND OPERATION	12-01	TESTING	
REMOVAL AND INSTALLATION	12-01	Loop Type	12-01
		Shunt Type	12-01

DESCRIPTION AND OPERATION

AMMETER

The ammeter is a gauge which senses the direction and rate of flow of electrical current to or from the battery to indicate whether the battery is being charged or discharged. A Shunt-type ammeter is used in F-100 through F-350 cowl-chassis units, and in F-and B-500 through 750 units. Other trucks have loop-type ammeters. The ammeter is not adjustable and should be replaced if proved to be inoperative.

TESTING

AMMETER

To test the ammeter, turn the headlights on with engine stopped. The meter pointer should move toward the D or discharge scale. If no movement of the needle is observed, check the battery to circuit breaker wire connections (C-Series only). If the connections are tight, and the meter does not indicate either a charge or a discharge, the meter is inoperative. Replace the meter.

LOOP TYPE

If the meter pointer moves toward the C or charge scale when the headlights are turned ON, **the wire passes through the loop in the wrong direction, or the battery is reversed.** Feed the wire through the loop in the right direction to correct this condition, after checking first to make sure that the battery is not reversed.

SHUNT TYPE

If the meter pointer moves toward the C or charge scale when the headlights are turned ON, **the wire connections at the meter are reversed. Connect the wires to the ammeter correctly after checking first to make sure that the battery is not reversed.**

REMOVAL AND INSTALLATION

AMMETER

F-100 THROUGH F-350

Removal

1. Remove the trim cover from the instrument cluster assembly.
2. Remove the instrument cluster (four screws) and disconnect the speedometer cable from the speedometer head.
3. Remove the 14401 printed circuit plug from the cluster and remove the insulator from the alternator gauge terminal.
4. Disassemble the mask and lense assembly.
5. Remove the charge indicator ammeter (two nuts)

Installation

1. Install the charge indicator ammeter

(two nuts).
2. Assemble the mask and lens assembly.
3. Install the insulator to the alternator gauge terminal and the 14401 printed circuit plug to the cluster assembly.
4. Position the instrument cluster to the instrument panel, connect the speedometer cable and install the instrument cluster screws.
5. Install the trim cover.

BRONCO AND ECONOLINE

Remove the instrument cluster as outlined in Group 33, Part 50. Then, remove the trim cover, lens and mask from the front of the cluster by removing the retaining screws. Remove the ammeter retaining screws and remove the ammeter. To install, position the ammeter and install the retaining screws. Install the mask, the lens and trim cover to the front side of the cluster and install the retaining screws.

F-500 THROUGH F-750 AND C-SERIES

1. Remove the instrument cluster assembly from the instrument panel.
2. If equipped with a loop type ammeter, disconnect the lead from the junction block and pull the lead through the gauge loops. If equipped with a shunt type ammeter, disconnect the two wires at the gauge terminals.
3. Remove the retaining screws and remove the charge indicator gauge from the instrument cluster.
4. Position the charge indicator gauge to the instrument cluster and install the retaining screws.
5. If equipped with a loop type ammeter, feed the wire through the loops at the junction block. Be sure that the wire is not reversed in direction as it passes through the loops. If equipped with a shunt type ammeter, connect the two instrument cluster wires to the gauge terminals.
6. Install the instrument cluster assembly to the instrument panel.

W-SERIES AND L-SERIES LINE HAUL

Removal
1. Remove the battery cover and disconnect the batteries.
2. Remove the moulding from the top of the gauge panel secured by three screws.
3. Open the gauge panel. Disconnect leads, nuts and the bulb.
4. Remove the ammeter secured by clamps and nuts.

Installation
1. Position the ammeter in the panel and secure it with clamps and nuts.
2. Connect the leads. Install nuts and bulb.
3. Close the panel. Position the top moulding and secure it with retaining screws.
4. Connect the batteries and install the cover.
5. Check the operation of the ammeter.

PART 33-21 Fuel Indicating System

COMPONENT INDEX	Page	COMPONENT INDEX	Page
DESCRIPTION AND OPERATION	21-01	TESTING	
REMOVAL AND INSTALLATION		Fuel Gauge	21-02
Fuel Gauge	21-02	Fuel Sending Unit	21-02
Fuel Sending Unit	21-03		

DESCRIPTION AND OPERATION

FUEL GAUGE SYSTEM

The fuel indicating system consists of a sender unit located in the fuel tank and a fuel gauge mounted in the instrument cluster (Fig. 1).

The fuel gauge pointer is attached to a wire wound bi-metal strip and when heated by the flow of current controlled by the sender, produces the appropriate indication. When the current is low, there is little heating effect and the pointer moves a short distance. As the current increases, it produces a greater heating effect causing the pointer to move a proportionately greater distance.

The fuel level sending unit consists of a variable resistor, that is controlled by the action of an attached float in the fuel tank. When the fuel level is low, the sending unit resistance is high and restricts the flow of current to the fuel gauge. A high fuel level causes a low resistance in the sending unit and allows a higher current to flow to the fuel gauge.

Thus, if the fuel level is low, resistance in the sender is high and allows only a low current to flow through the gauge windings causing the pointer to move a short distance. If the fuel level is high, the resistance in the sender is low and allows a higher current to flow causing the pointer to move a greater distance.

The L-Series Line Haul model system does not have an instrument voltage regulator. It operates directly from battery voltage.

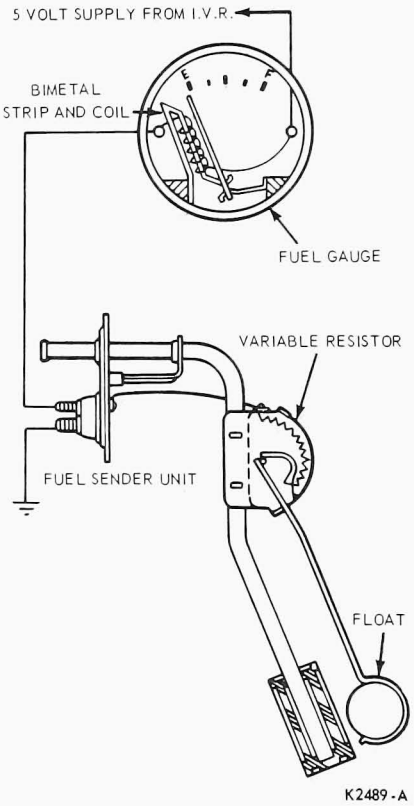

FIG. 1 Fuel Level Indicating System

TESTING

FUEL GAUGE

ALL EXCEPT L-SERIES LINE HAUL MODELS

Follow the instructions printed on the case of the Rotunda Fuel Gauge System Tester No. WRE 500-70. If a Rotunda Tester is not available, use the following procedure.

Disconnect the fuel gauge lead from the terminal at the sender unit and connect the lead of a 12-volt test light or the positive lead of a volt meter (20 volt scale) to the gauge lead that was disconnected from the sender unit. Connect the other test lead to a suitable ground. With the ignition switch in the ON position, a flashing light or fluctuating voltage will indicate that the instrument voltage regulator is good and that the gauge circuit is not interrupted.

If a pulsating voltage is shown but the gauge is not accurate, perform the calibration test.

If the light stays on or the voltage reading is steady, replace the I.V.R.

If no voltage is indicated by the voltmeter or test light, check the I.V.R. for proper ground and check for an open circuit in the I.V.R., the gauge windings, the printed circuit on Econoline and F-100-350, or the feed wire from the I.V.R. to the gauge on all other models.

Do not ground or spark either terminal of the instrument voltage regulator. This will burn out the dash wiring harness or the instrument voltage regulator or both.

L-SERIES LINE HAUL MODELS

Since L-Series Line Haul models do not have an instrument voltage regulator, the fuel gauge works directly off the 12-volt battery system and is tested in a different manner than fuel gauges on other vehicles.

The required test equipment consists of: a 33 ohm, 5 watt resistor to check gauge calibration for high readings; a 100 ohm, 2 watt resistor to check the calibration for mid-scale readings; and a 270, 1 watt resistor to check the calibration for low readings.

Disconnect the lead from the fuel gauge at the sender unit, connect the resistor between the gauge lead and ground, and turn on the ignition switch. With the 33 ohms, 5 watt resistor the gauge should read approximately **FULL**. With the 100 ohm, 2 watt resistor, the gauge pointer should approximate the mid-point on the scale. With the 270 ohm, 1 watt resistor, the reading should be approximately **EMPTY**.

If the gauge does not perform as indicated in this test, either the gauge or the wires connected to the gauge are damaged. If the gauge shows correct calibration, replace the sending unit.

SENDING UNIT

Drain or pump the fuel from the fuel tank. Disconnect the gauge lead at the sending unit and remove the sending unit from the tank. Using an ohmmeter, connect one lead to the metal housing of the sending unit and the other lead to the variable resistor terminal of the sending unit. The ohmmeter should read 8-12 ohms of resistance with the fuel sending unit float rod at the full end (up) of its travel and 60-86 ohms of resistance at the empty end (down). If the resistance is not within limits, replace the sending unit.

REMOVAL AND INSTALLATION

FUEL GAUGE

BRONCO AND ECONOLINE

Remove the instrument cluster as outlined in Group 33, Part 50. Then remove the trim cover, lens and mask from the front of the cluster by removing the retaining screws.

Remove the fuel gauge retaining screws and remove the fuel gauge.

To install, position the fuel gauge and install the retaining screws. Install the mask, the lens and trim cover to the front side of the cluster and install the retaining screws.

F-100 Through F-350

Remove the instrument cluster as outlined in this Group. Then, remove the lens and mask from the cluster. Remove the 2 nuts attaching the gauge to the cluster, and remove gauge. To install, reverse the removal procedure.

ALL OTHERS EXCEPT F-100 THROUGH F-350 AND W-SERIES

1. If necessary, disconnect the speedometer cable, remove the instrument cluster retaining screws and tilt the cluster toward the steering column. On a truck with air brakes, the line must be disconnected from the air pressure gauge. On a truck with a tachometer, the connections to the tachometer must be disconnected.
2. Disconnect the fuel gauge wires from the fuel gauge housing.
3. Remove the fuel gauge retaining screws and remove the fuel gauge assembly from the instrument cluster.
4. Position the fuel gauge assembly to the instrument cluster and install and tighten the retaining screws.
5. Connect the wires to the fuel gauge housing.
6. If removed, install the instrument cluster assembly to the instrument panel and connect the speedometer cable. Connect the tachometer and the air pressure gauge, if so equipped.

W-SERIES—ON INSTRUMENT PANEL

Removal

1. Remove the battery cover and disconnect the batteries.
2. Remove the moulding from the top of the gauge panel secured by two screws.
3. Open the gauge panel. Disconnect the two leads, two nuts and a bulb.
4. Remove two nuts and brackets retaining the fuel gauge to the panel and remove the gauge.

Installation

1. Position the new fuel gauge to the panel and secure with two brackets and nuts.
2. Install the bulb socket and bulb and connect the electrical leads.
3. Close the panel. Position the top moulding and secure it with two retaining screws.
4. Connect the batteries and install the cover.
5. Check the operation of the gauge.

SENDING UNIT

1. Remove the fuel from the fuel tank.
2. Disconnect the fuel gauge sending unit wire from the sending unit.
3. Loosen the hose clamp and disconnect the tank line at the sending unit.
4. Remove any dirt that has accumulated around the sending unit so that it will not enter the tank.
5. Turn the sending unit retaining ring counterclockwise and remove the unit, retaining ring, and mounting gasket.
6. Clean the fuel gauge sending unit mounting surface at the fuel tank.
7. Position the sending unit and a new mounting gasket on the fuel tank and secure it with the retaining ring.
8. Connect the sending unit wire and the fuel tank line.
9. Fill the tank with the fuel removed.
10. Check the fuel gauge operation and check for leaks.

PART 33-30 Oil Pressure Indicator—Light

DESCRIPTION AND OPERATION

SYSTEM OPERATION

A red indicator light glows when the oil pressure is below a safe value. The light should come on when the ignition switch is first turned to the R or run position. The indicator light should go out after the engine is started, indicating that the oil pressure has reached a safe value.

The light is connected between the oil pressure switch unit (mounted on the engine) and the coil terminal of the ignition switch (Fig. 1).

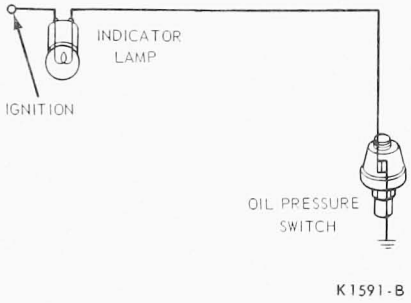

FIG. 1 Oil Pressure Indicator—Light System

TESTING

SYSTEM TESTING

To test the indicator light, turn on the ignition switch. Do not start the engine. The light should come on. Start the engine. The light should go out, indicating that the oil pressure has built up to a safe value.

To test the oil pressure switch on the engine, turn the ignition switch on with the engine not running. The indicator light should come on. If the indicator light does not come on, short the terminal of the oil pressure switch unit to ground. If the light now comes on, the oil pressure switch is inoperative, or not properly sealed to the engine. **Be sure to use electrically conductive sealer C3AZ-19554-B or Teflon tape (DOAZ-19554-C) on the mounting threads. If the light still does not come on, the bulb is burned out or the wires from the bulb to the ignition switch and oil pressure switch are worn or broken.**

REMOVAL AND INSTALLATION

SENDING UNIT SWITCH

The oil pressure sending units are mounted in different ways and locations. Figs. 2 and 3 are typical examples.

To remove the sending unit, disconnect the wire at the unit terminal and unscrew the unit from its mounting. Install the new sending unit, connect the wire to the unit terminal, and check the operation of the unit. **Be sure to use Teflon tape (DOAZ-19554-C), or electrically conductive water resistant sealer C3AZ-19554-B on the threads of the unit. The pressure switch type unit used with the indicator light system is not interchangeable with the variable resistance type unit used with gauge system. Refer to the Ford Truck Master Parts Catalog for proper parts usage. Installation of the wrong sending unit will result in an inoperative oil pressure indicating system and a damaged sending unit or gauge.**

INDICATOR LIGHT

To remove the indicator bulb, turn the bulb and socket assembly 1/4 turn counterclockwise and remove. To install, position the new bulb and socket assembly to the printed circuit and turn it clockwise 1/4 turn.

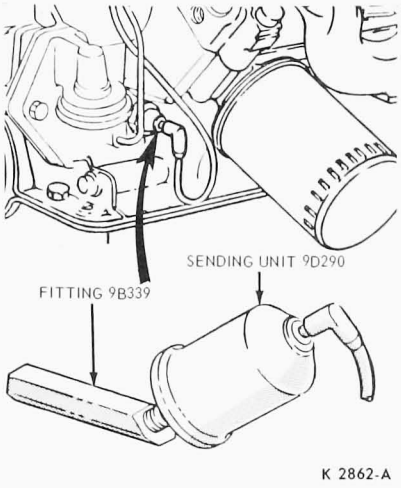

FIG. 2 Oil Pressure Sending Switch—8-Cylinder Typical

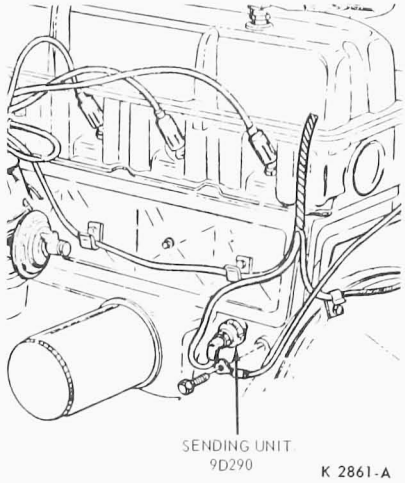

FIG. 3 Oil Pressure Sending Switch—6-cylinder Typical

PART 33-32 Oil Pressure Indicator Gauge

COMPONENT INDEX	Page	COMPONENT INDEX	Page
DESCRIPTION AND OPERATION		TESTING	
Electrical Gauge System	32-01	Calibration Test	32-01
Pressure Gauge System	32-01	Gauge Bench Test	32-02
REMOVAL AND INSTALLATION		Sending Unit and Gauge	32-01
Gauge	32-03		
Sending Unit	32-02		

DESCRIPTION AND OPERATION

SYSTEM OPERATION

ELECTRICAL GAUGE SYSTEM

The oil pressure gauge indicating system consists of the instrument voltage regulator, an oil pressure indicating gauge and an oil pressure sending unit, all connected in series. The sending unit consists of a diaphragm, a contact and a variable resistor. The oil pressure causes the diaphragm to move the contact on the variable resistor thus controlling the flow of current through the gauge.

When the oil pressure is low, the resistance of the sending unit is high, thus restricting the flow of current through the gauge which moves the pointer only a short distance. As the oil pressure increases, the resistance of the sending unit decreases causing a proportionately increased flow of current and movement of the pointer.

PRESSURE GAUGE SYSTEM

The direct oil pressure indicating system consists of a oil pressure gauge mounted in the instrument cluster and a pressure tube connected at the pressure pick-up point on the engine. As the engine oil pressure increases, a Bourdon tube in the gauge deflects causing the pointer to move.

TESTING

ELECTRICAL GAUGE SYSTEM

SENDING UNIT AND GAUGE

Remove the oil pressure sender unit and temporarily attach a mechanical oil pressure gauge in its place. Operate the engine to determine the oil pressure. If the oil pressure indicated on the mechanical gauge is normal, the instrument panel gauge should also indicate within the normal band.

If the gauge does not indicate, make sure that the sender unit is properly sealed to the engine. **Apply electrically conductive sealer C3AZ-19554-B.** If the gauge still does not indicate, proceed as follows. Follow the instructions printed on the case of the Rotunda Tester No. WRE 500-70.

If a Tester is not available, use the following procedure.

Disconnect the oil gauge lead from the terminal at the sender unit and connect the lead of a 12-volt test light or the positive lead of a volt meter (20 volt scale) to the gauge lead that was disconnected from the sender unit (Fig. 1). Connect the other test lead to a suitable ground. With the ignition switch in the ON or ACC position, a flashing light or fluctuating voltage will indicate that the instrument voltage regulator is good and that the gauge circuit is not interrupted.

If a pulsating voltage is shown but the gauge is not accurate, perform the calibration test.

If the light stays on or the voltage reading is steady, replace the I.V.R.

If no voltage is indicated by the voltmeter or test light, check the I.V.R. for proper ground and check for an open circuit in the I.V.R., the gauge windings, the printed circuit on Econoline and F-100-350, or the feed wire from the IV.R. to the gauge on all other models.

Do not ground or spark either terminal of the instrument voltage regulator. This will damage the dash wiring harness or the instrument voltage regulator or both.

CALIBRATION TEST

When the instrument voltage regulator or one of the gauges (oil, temperature, fuel) is suspected of being out of calibration, having a fluctuating movement or a high or low reading, both the gauge and the instrument

voltage regulator must be tested simultaneously. This test is done in the vehicle.

The required test equipment consists of a 10 ohm, 5 watt resistor to check the gauge calibration for correct high readings, and a 75 ohm, 1 watt resistor to check the calibration for low readings.

Disconnect the lead from the gauge to be tested at the appropriate sender unit, connect the resistor between the gauge lead and gound (Fig. 1), and turn on the ignition switch. With the 10 ohm resistor, the gauge should show a high reading. With the 75 ohm resistor, the gauge should show a low reading.

If the gauge does not perform as indicated, replace the instrument voltage regulator and retest to determine if the gauge is causing the trouble. If the gauge now reads correctly, the trouble has been eliminated. If the gauge is still out of calibration, it must be replaced.

GAUGE BENCH TEST FOR OPEN WINDINGS

To test a fuel, oil, or temperature gauge for open windings, remove the gauge from the vehicle as outlined in the appropriate car line Removal and Installation Section in this Part. Connect the gauge to an ohmmeter and read the resistance. An upward movement of the needle from 10 toward 14 ohms is normal because the current increases the temperature of the gauge coil (windings). If the ohmmeter reads below 10 ohms or above 14 ohms, replace the gauge.

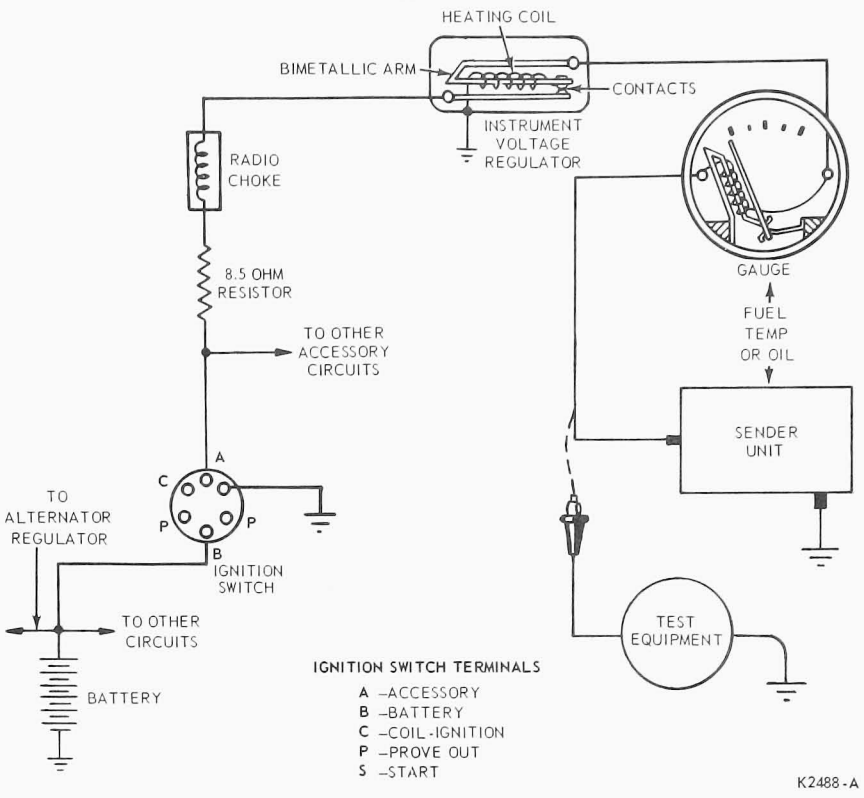

FIG. 1 Instrument Voltage Regulator and Gauge System Test

REMOVAL AND INSTALLATION

SENDING UNIT

The oil pressure sending units are mounted in different ways and locations. Figs. 2 and 3 are typical examples.

To remove the sending unit, disconnect the wire at the unit terminal and unscrew the unit from its mounting. Install the new sending unit, connect the wire to the unit terminal, and check the operation of the unit. **Be sure to use electrically conductive water resistant sealer C3AZ-19554-B on the threads of the unit. The pressure switch type unit used with the indicator light system is not interchangeable with the variable resistance type unit used with gauge system. Refer to the Ford Truck Master Parts Catalog for proper parts usage. Installation of the wrong sending unit will result in an inoperative oil pressure indicating system and a damaged sending unit or gauge.**

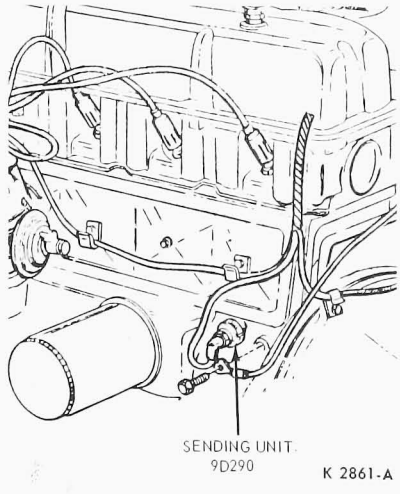

FIG. 2 Oil Pressure Sending Unit—6-Cylinder Typical

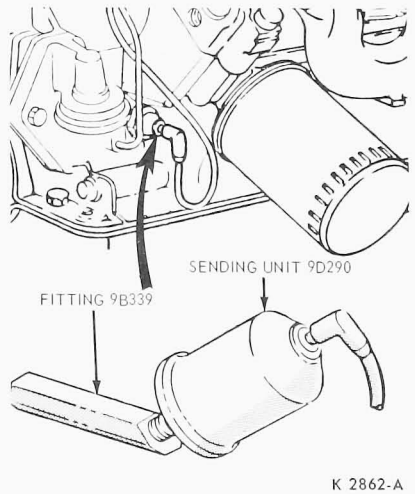

FIG. 3 Oil Pressure Sending Unit—8-Cylinder Typical

OIL PRESSURE GAUGE

BRONCO, F-100 THROUGH F-350 AND ECONOLINE

Remove the instrument cluster as outlined in Group 33, Part 50. Then remove the trim cover, mask and lens from the front of the cluster by removing the retaining screws. Remove the oil pressure retaining screws and remove the gauge. To install, position the oil pressure gauge and install the retaining screws. Install the mask, lens and trim cover to the front side of the cluster and install the retaining screws.

F-100 THROUGH F-350

Remove the instrument cluster as outlined in Part 33-12. Then, remove the lens and mask from the cluster. Then, remove the 2 nuts attaching the gauge to the cluster, and remove gauge. To install, reverse the the removal procedure.

ALL OTHERS EXCEPT W-SERIES, L-SERIES F-100 THROUGH F-350 AND CITY DELIVERY MODELS

Remove the instrument cluster as outlined in Group 33, Part 51. Disconnect the leads from the oil pressure gauge. Remove the retaining screws and remove the gauge. To install, position the gauge to the cluster and install the retaining screws. Connect the leads to the gauge and install the cluster.

W-SERIES AND L-SERIES LINE HAUL

Removal

1. Remove the battery cover and disconnect the batteries.
2. Remove the moulding from the top of the gauge panel secured by two screws.
3. Open the gauge panel. Disconnect the lead and bulb.
4. Remove the gauge secured by two nuts and a bracket.

Installation

1. Position the gauge in the panel and secure it with a bracket and nuts.
2. Install the bulb and connect the lead.
3. Close the panel. Position the top moulding and secure it with two retaining screws.
4. Connect the batteries and install the cover.
5. Check the operation of the gauge.

PART 33-41 Temperature Indicator

COMPONENT INDEX	Page	COMPONENT INDEX	Page
DESCRIPTION AND OPERATION		TESTING	
Temperature Indicator System	41-01	Calibration Test	41-01
REMOVAL AND INSTALLATION		Gauge Bench Test	41-02
Temperature Gauge	41-02	System Test	41-01
Temperature Sending Unit	41-02		

DESCRIPTION AND OPERATION

TEMPERATURE GAUGE SYSTEM

ALL EXCEPT W-SERIES AND L-SERIES, LINE HAUL TRUCKS

The temperature indicating system consists of a sending unit mounted in the cylinder head, and a temperature gauge mounted on the instrument panel. When the engine temperature is low, the resistance of the sending unit is high, thus restricting the flow of current through the gauge which moves the pointer only a short distance. As the temperature of the engine increases, the resistance of the sending unit decreases causing a proportionately increased flow of current and movement of the pointer.

W-SERIES AND L-SERIES, LINE HAUL TRUCKS

These trucks use a combination temperature sending unit and gauge assembly which operates on the capillary tube, direct action gauge principle rather than electrically. A temperature bulb (sending unit) filled with ether is threaded into the engine block. A capillary tube (cable) connects the temperature bulb in the engine to a curved (Bourdon) tube in the gauge at the instrument cluster. The Bourdon tube is connected to the gauge pointer. As engine temperature rises, the ether expands causing the curved Bourdon tube to straighten out and thus move the pointer to a higher reading. As the engine cools, the ether contracts causing the Bourdon tube to resume its curved position and thus move the pointer to a lower reading.

TESTING

GAUGE SYSTEM

ALL EXCEPT W-SERIES AND L-SERIES, LINE HAUL TRUCKS

Start the engine and allow it to run until a thermometer placed in the coolant at the radiator filler cap reads a minimum of 180 degrees F. The gauge in the instrument panel should indicate within the normal band.

If the gauge does not indicate, use of the Gauge System Tester No. WRE 500-70. If a Tester is not available, use the following procedure.

Disconnect the gauge lead from the terminal at the sender unit. Connect the lead of a 12 volt test light or the positive lead of a voltmeter (20 volt scale) to the gauge lead that was disconnected from the sender unit (Fig. 1). Connect the other test lead to a suitable ground. With the ignition switch in the ON or ACC position, a flashing light or fluctuating voltage will indicate that the instrument voltage regulator is good and that the gauge circuit is not interrupted.

If a pulsating voltage is shown but the gauge is not accurate, perform the calibration test.

If the light stays on or the voltage reading is steady, replace the I.V.R.

If no voltage is indicated by the voltmeter or test light, check the I.V.R. for proper ground and check for an open circuit in the I.V.R., the gauge windings or the printed circuit.

Do not ground or spark either terminal of the instrument voltage regulator. This will damage the dash wiring harness or the instrument voltage regulator or both.

CALIBRATION TEST

When the instrument voltage regulator or one of the gauges (oil, temperature, fuel) is suspected of being out of calibration, having a fluctuating movement or a high or low reading, both the gauge and the instrument voltage regulator must be tested simultaneously. This test is done on the vehicle.

The required test equipment consists of a Rotunda Tester No. WRE 500-70 or a 10 ohm resistor to check the gauge calibration for correct high readings, and a 73 ohm resistor to check the calibration for low readings.

Disconnect the lead from the gauge at the sender unit, connect the resistor between the gauge lead and ground (Fig. 1), and turn on the ignition switch. With the 10 ohm registor, the gauge should show a high reading. With the 73 ohm resistor, the gauge should show a low reading.

If the gauge does not perform as indicated, replace the instrument voltage regulator and retest to determine if the gauge is causing the

trouble. If the gauge now reads correctly, the trouble has been eliminated. If the gauge is still out of calibration, the gauge is damaged and must be replaced.

GAUGE BENCH TEST FOR OPEN WINDINGS

To test the gauge for open windings, remove the gauge from the vehicle. Connect the gauge to an ohmmeter and read the resistance. An upward movement of the needle from 10 toward 14 ohms is normal because the current increases, the temperature of the gauge coil (windings). If the ohmmeter reads below 10 ohms or above 14 ohms, replace the gauge.

W-SERIES AND L-SERIES, LINE HAUL TRUCKS

Start the engine and allow it to run until it has reached normal operating temperature. Place a thermometer in the coolant at the radiator filler cap. The thermometer should read close to the temperature range of the coolant thermostat that is being used. The gauge in the instrument panel should indicate within the normal band.

If the gauge does not indicate, the ether has escaped through a leak in the temperature bulb, in the capillary tube, or in the Bourdon tube at the gauge. Replace the bulb, tube and gauge as an assembly.

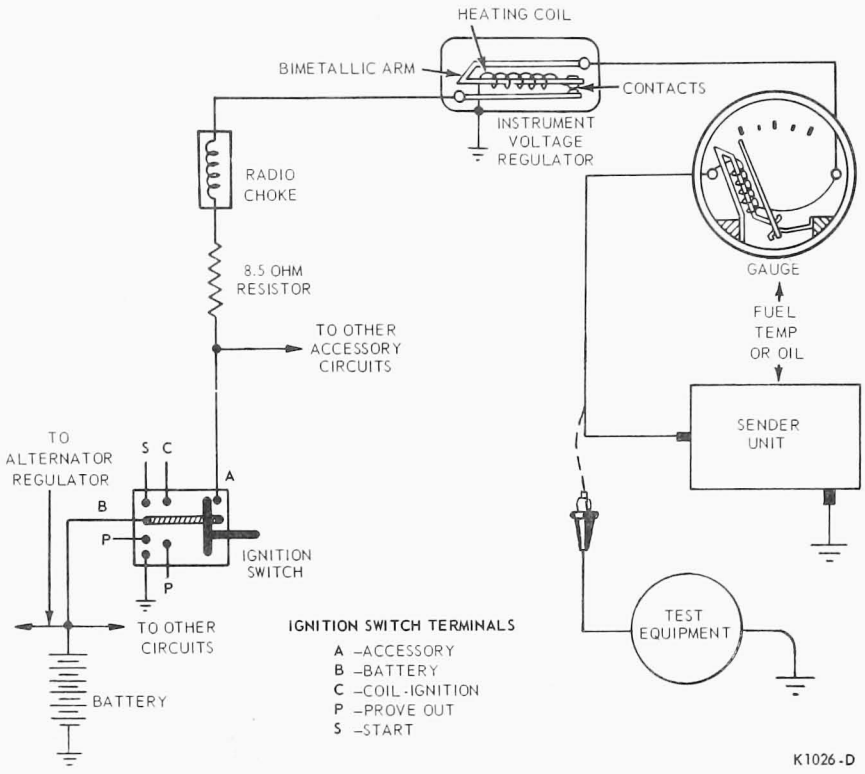

FIG. 1 Instrument Voltage Regulator and Temperature Gauge Test

REMOVAL AND INSTALLATION

TEMPERATURE SENDING UNIT

ALL EXCEPT W-SERIES AND L-SERIES, LINE HAUL TRUCKS

1. Disconnect the temperature sending unit wire at the sending unit.
2. Prepare the new temperature sending unit for installation by applying a small amount of electrically conductive sealer C3AZ-19554-B to the threads.
3. Remove the temperature sending unit from the cylinder head and immediately install the new temperature sending unit.
4. Connect the wire to the temperature sending unit.
5. Start the engine and check the sending unit operation.

TEMPERATURE GAUGE

ECONOLINE

1. If necessary, disconnect the speedometer cable, remove the instrument cluster retaining screws and tilt the cluster toward the steering column. On a truck with air brakes, the line must be disconnected from the air pressure gauge. On a truck with a tachometer, the connections to the tachometer must be disconnected.
2. Disconnect the temperature gauge wiring from the temperature gauge housing.
3. Remove the temperature gauge retaining screws and remove the temperature gauge assembly from the instrument cluster.
4. Position the temperature gauge assembly to the instrument cluster and install and tighten the retaining screws.
5. Connect the wires to the temperature gauge housing.
6. If removed, install the instrument cluster to the instrument panel and connect the speedometer cable. Connect the tachometer and the air pressure gauge if so equipped.

F-100 Through F-350

Remove the instrument cluster as outlined in this Group. Then, remove the lens and mask from the cluster. Then, remove the 2 nuts attaching the gauge to the cluster, and remove gauge.

To install, reverse the removal procedure.

W-SERIES

Removal

1. Remove the battery cover and disconnect the batteries.
2. Remove the moulding from the top of the gauge panel secured by two screws.
3. Open the gauge panel. Disconnect the tube assembly and a bulb.
4. Remove two nuts and brackets retaining the temperature gauge to the panel and remove the gauge.

Installation

1. Position the new temperature gauge to the panel and secure with two brackets and nuts.
2. Install the bulb socket and bulb and connect the tube assembly.
3. Close the panel. Position the top moulding and secure it with two retaining screws.
4. Connect the batteries and install the cover.
5. Check the operation of the gauge.

BRONCO

Disconnect the battery ground cable and pull the instrument cluster away from the panel far enough to gain access to the cluster back. Disconnect the wires from the gauge. Then, remove the instrument cluster plate, lens and mask. Remove the gauge retaining screws, and remove the gauge.

To install, fit the replacement gauge in position in the cluster and install the retaining screws. Install the instrument cluster plate, lens and mask. Connect the wires to the gauge terminals. Install the cluster and connect the battery ground cable. Test the gauge for proper operation.

TEMPERATURE SENDING UNIT AND GAUGE COMBINATION

W-SERIES AND L-SERIES, LINE HAUL TRUCKS

Removal

1. Disconnect the battery.
2. Drain the cooling system.
3. Tilt the cab.
4. Disconnect the temperature cable and bulb from the engine.
5. Remove the bolt and clip retaining the temperature cable through the grille opening.
6. Remove the bolt and clip retaining the cable to the block and feed the cable back to the floor pan.
7. Lower the cab.
8. Remove the grommet and retainer from the floor pan by removing two screws and pull the cable and bulb through the floor pan and into the cab.
9. Remove the moulding at the top of the gauge panel by removing two screws.
10. Open the gauge panel and disconnect the light. Remove two nuts retaining the gauge and bracket to the panel. Remove the gauge, cable and bulb assembly by feeding the bulb and cable up through the instrument panel and out through the gauge panel.

Installation

1. Route the cable and bulb through the gauge panel, instrument panel and down the side of the steering column. Position the gauge and bracket to the panel and install the two retaining screws.
2. Close the gauge panel. Position the top moulding and secure with two retaining screws.
3. Route the cable and bulb through the floor pan and to the engine.
4. Raise the cab.
5. Install the bolt and clip retaining the cable in front of the cab through the grille opening. Install the clip retaining the cable near the engine.
6. Apply sealer to the new assembly and install it into the block.
7. Lower the cab.
8. Install the grommet and retainer in the floor pan and secure it with two screws.
9. Fill the cooling system.
10. Connect the battery and install the battery cover.
11. Start the engine and check the new gauge operation.

PART 33-51 Instrument Cluster and Printed Circuit

COMPONENT INDEX	Page	COMPONENT INDEX	Page
REMOVAL AND INSTALLATION		REMOVAL AND INSTALLATION - Cont.	
Instrument Cluster	51-01	Printed Circuit	51-03
Instrument Voltage Regulator	51-03		

REMOVAL AND INSTALLATION

CLUSTER ASSEMBLY

BRONCO

Removal

1. Disconnect the battery ground cable and disconnect the speedometer cable from the speedometer head.
2. Remove the screws retaining the instrument cluster assembly to the instrument panel.
3. Remove the cluster from behind the instrument panel. Disconnect the speedometer cable at the speedometer head.
4. Disconnect the feed wires to the instruments and the instrument voltage regulator and remove the light sockets from the cluster back, noting the positions of each. Remove the two clips that retain the wiring harness to the cluster back (1 screw each) and pull the harness away from the cluster. Remove the instrument cluster assembly (Fig. 1).

Installation

1. Mount the wiring harness to the lower edge of the cluster back by installing the two retaining clips (1 screw each).
2. Connect the instrument voltage regulator and the instrument wires to the cluster assembly and install the light sockets. **Be sure that the black-yellow stripe wire is routed correctly through the ammeter loop of the charge indicator to prevent reversed gauge indications.**
3. Connect the speedometer cable and tighten the nut.
4. Carefully move the instrument cluster into position from behind the instrument panel, guiding all wiring and cables into position to prevent damage. **Be careful not to kink the speedometer cable.**
5. Install the screws retaining the instrument cluster to the instrument panel.
6. Connect the battery ground cable and check the operation of all gauges, lights and signals.

ECONOLINE

Disconnect the battery ground cable. From the front of the cluster, remove the screws that retain the cluster to the instrument panel, and position the cluster part way out of the panel for access to the back of the cluster. At the back of the cluster, disconnect the speedometer cable from the head and disconnect the multiple (feed) plug from the printed circuit. Disconnect the wire from the flasher unit at the upper left hand corner of the cluster and remove the cluster assembly from the vehicle (Fig. 2).

To install, hold the cluster near its opening in the instrument panel and

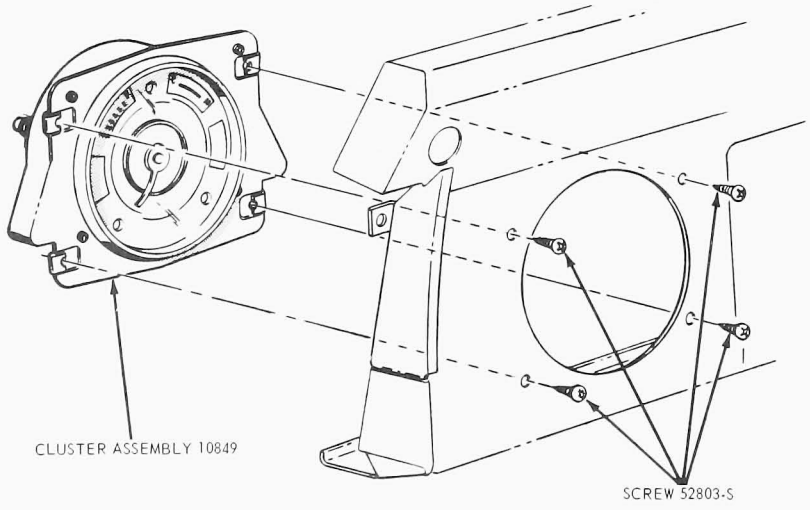

FIG. 1 Instrument Cluster—Bronco

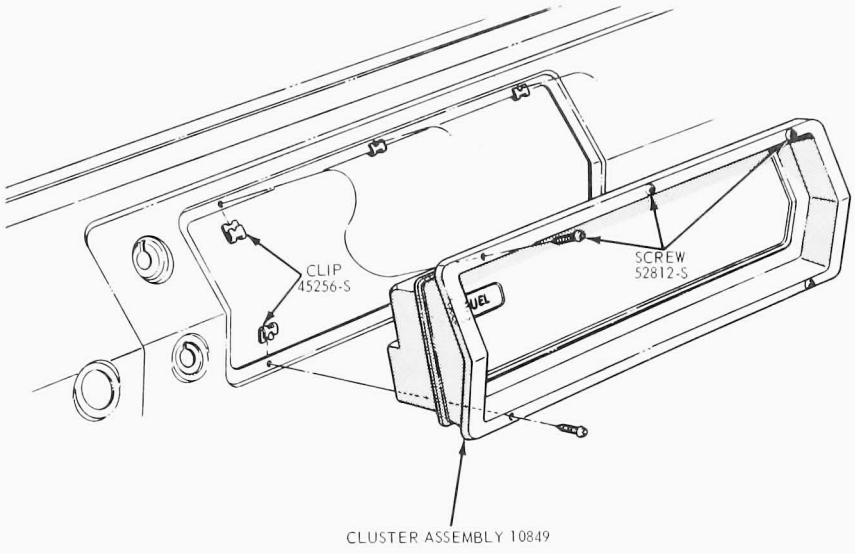

FIG. 2 Instrument Cluster—Econoline

connect: the wire to the flasher unit at the upper left hand corner of the cluster; the multiple feed plug to the printed circuit; and the speedometer cable to the head. Position the cluster to the instrument panel and install the retaining screws.

F-100 THROUGH F-350

Removal

1. Disconnect the battery ground cable.
2. Pull the radio knobs off the radio shafts (if so equipped).
3. Remove the fuel gauge switch knob (if so equipped), heater control knobs and wiper-washer knob. Use a hook tool to release each knob lock tab.
4. Remove the knob and shaft from the lights switch.
5. Remove one nut and washer from each radio control shaft, and remove the radio bezel.
6. Remove the cluster bezel (Fig. 4). The attaching screws are located as follows: 4 screws along top of bezel; one screw between the lights and wiper-washer switch; and 2 screws below the radio. Then, disconnect the A/C duct (if so equipped), and illumination light from the bezel. The illumination light is located

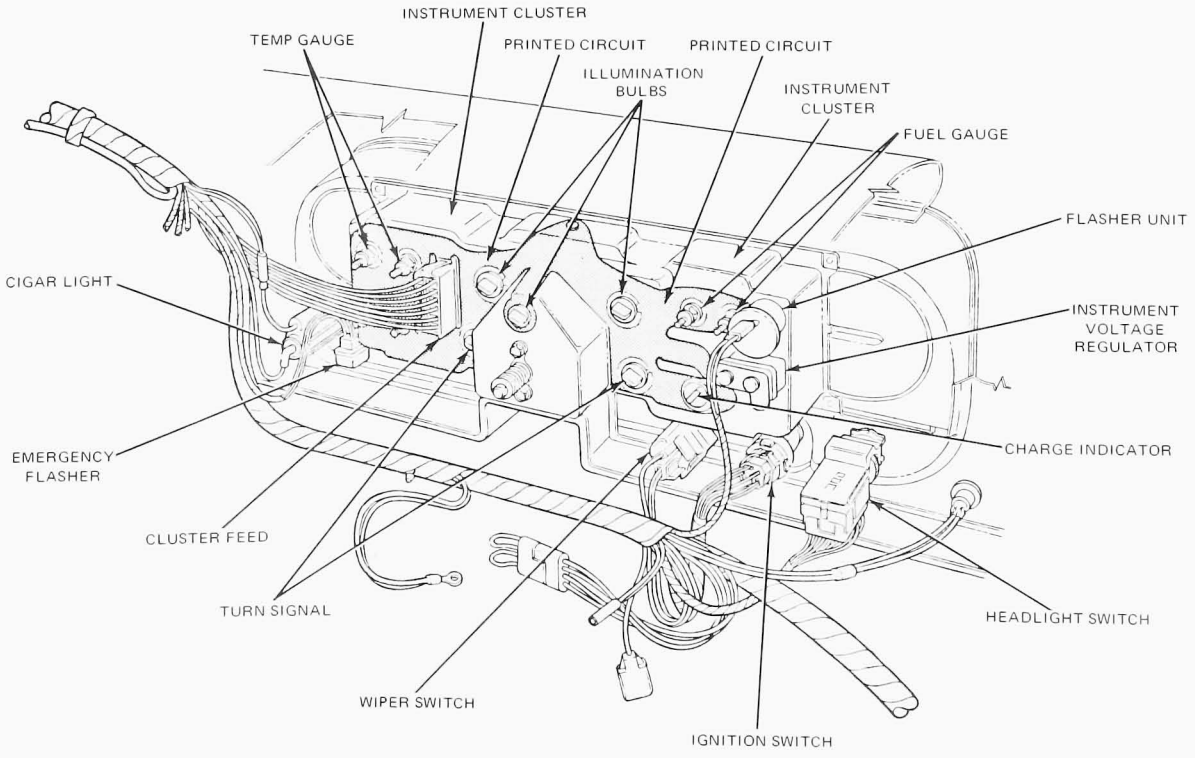

FIG. 3 Instrument Cluster-Back View—Econoline

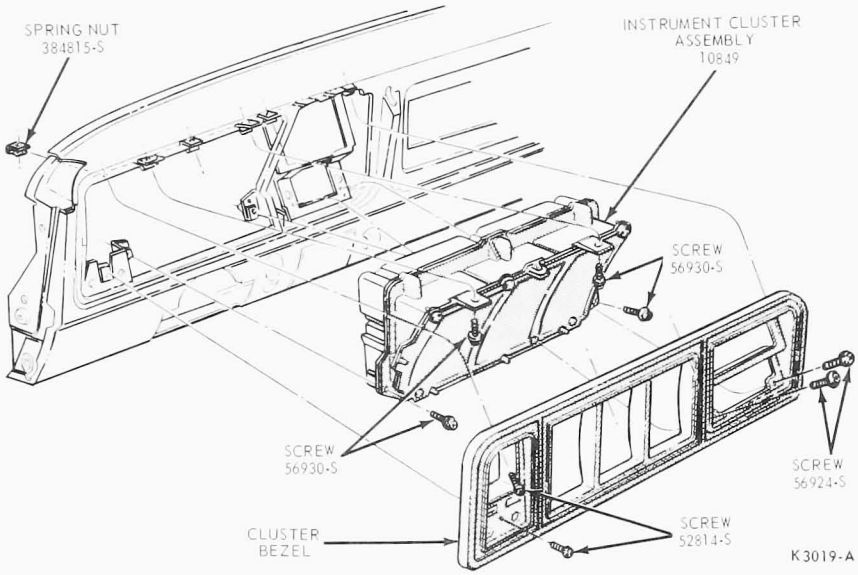

FIG. 4 Instrument Cluster—F-100-F-350

between the lights and wiper-washer switches.

7. Remove four cluster attaching screws, disconnect the speedometer cable and wire connector from the printed circuit, and remove the cluster (Figs. 5 and 6).

Installation

1. Position cluster to opening and connect the multiple connector and the speedometer cable. Connect the A/C illumination light (if so equipped) and install the four cluster retaining screws.
2. Install the cluster bezel.
3. Install the radio bezel (if so equipped).
4. Install the light switch knob and shaft.
5. Install the heater control knobs and the wiper-washer control knobs.
6. Install the radio knobs, (if so equipped).
7. Connect the battery cable.

ALL EXCEPT BRONCO, ECONOLINE AND F-100 THROUGH F-350

Removal

1. Disconnect the battery ground cable.
2. Disconnect the speedometer cable at the speedometer head.
3. Remove the screws retaining the instrument cluster assembly to the instrument panel and lift the cluster out at the front of the panel.
4. Disconnect the instrument wires, remove the light sockets and remove the cluster assembly. On a truck with air brakes, the line must be disconnected from the air pressure gauge. On a truck with a tachometer, the connections to the tachometer must be disconnected.

Installation

1. Position the instrument cluster assembly to the instrument panel, connect the instrument wires, and install the light sockets. Connect the tachometer and the air pressure line if so equipped.
2. Make certain that all wiring is moved away from the instrument panel opening. Install the instrument cluster assembly to the instrument panel with the retaining screws.
3. Connect the speedometer cable and the battery ground cable. **Be careful not to kink the speedometer cable.**
4. Check the operation of all gauges, lights and signals.

In some vehicles, removal may be made easier by first disconnecting the speedometer cable, removing the instrument cluster retaining screws, and tilting the cluster toward the steering column.

INSTRUMENT VOLTAGE REGULATOR AND PRINTED CIRCUIT

Remove the instrument cluster from the instrument panel as described in this Section. Disconnect (snap off) the printed circuit connector buttons from the voltage regulator. Remove the voltage regulator. Remove the voltage regulator from the cluster (1 retaining screw).

After removing the voltage regulator, remove the four gauge retaining nuts and the seven light bulbs, all of which hold the printed circuit to the back of the cluster. Remove the printed circuit from the cluster.

When installing the printed circuit, carefully position it to the back of the cluster and engage it to the plastic locating dowel.

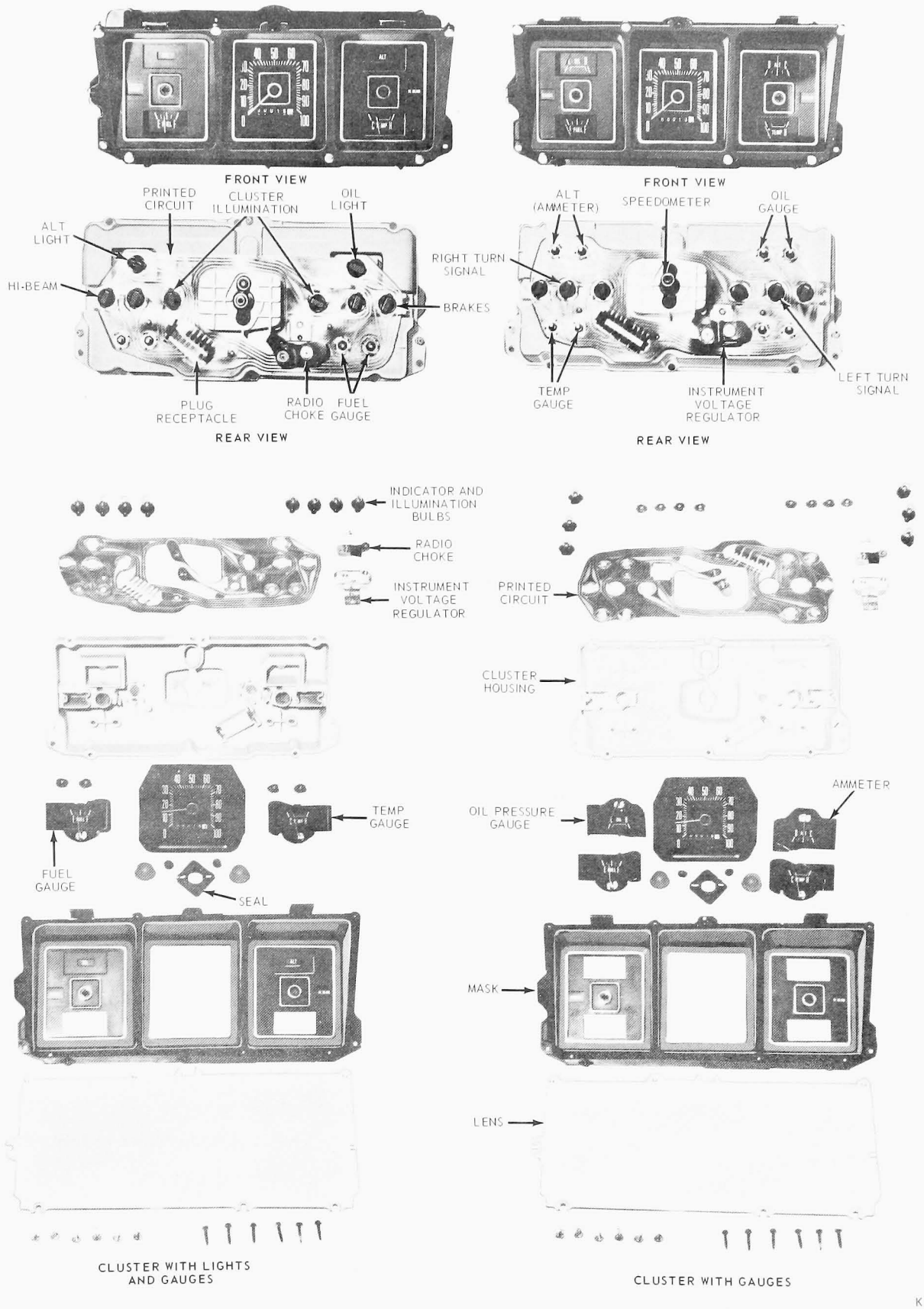

FIG. 5 Instrument Cluster Disassembled—F-100-F-350

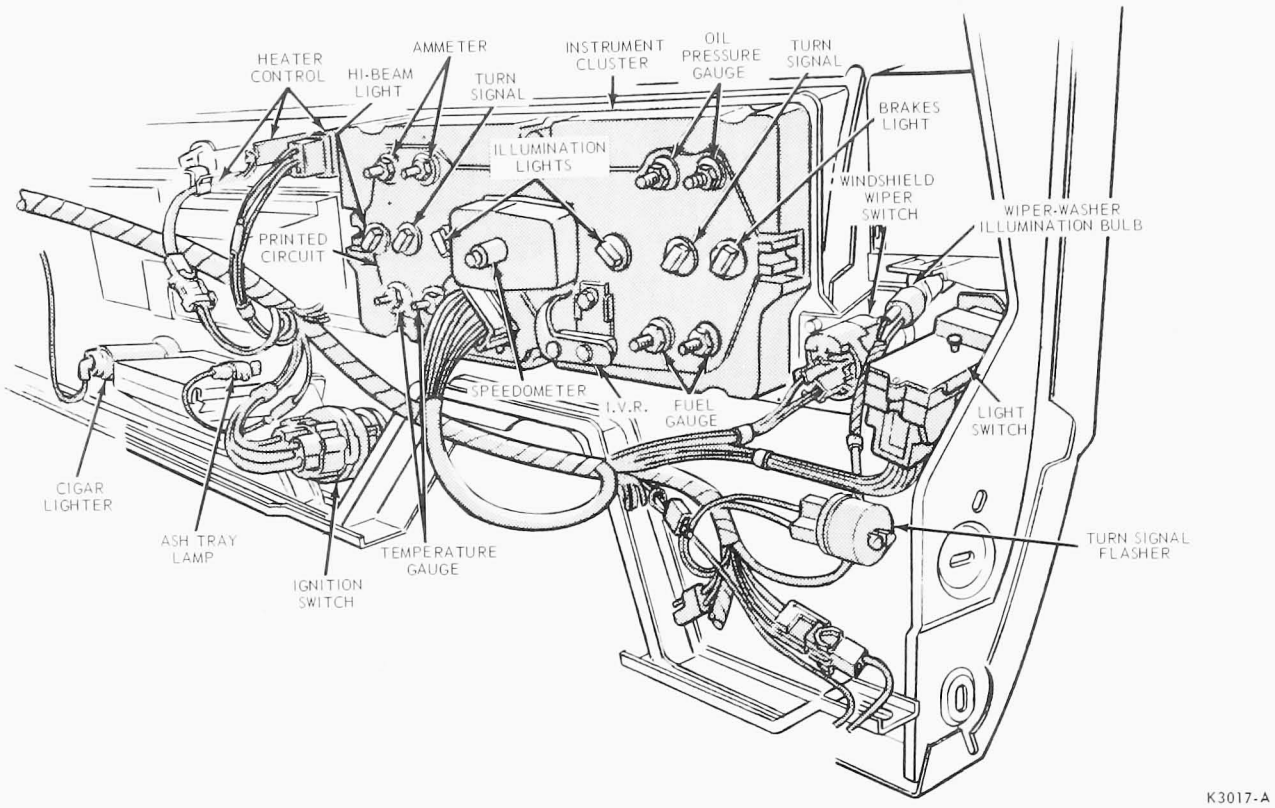

FIG. 6 Instrument Cluster Rear View—F-100-F-350

PART 33-71 Ignition Switch

COMPONENT INDEX	Page	COMPONENT INDEX	Page
REMOVAL AND INSTALLATION	71-02	TESTING	71-01

TESTING

IGNITION SWITCH

To test the continuity of the ignition switch, remove the switch from the vehicle. Insert the ignition key in the switch. **Do not use anything but the key to actuate the switch to the various positions because of possible damage to the switch.** Using a self-powered test light or ohmmeter, check the continuity through the switch as illustrated in Fig. 1. If the switch **does not meet all** of the continuity tests, the switch should be replaced.

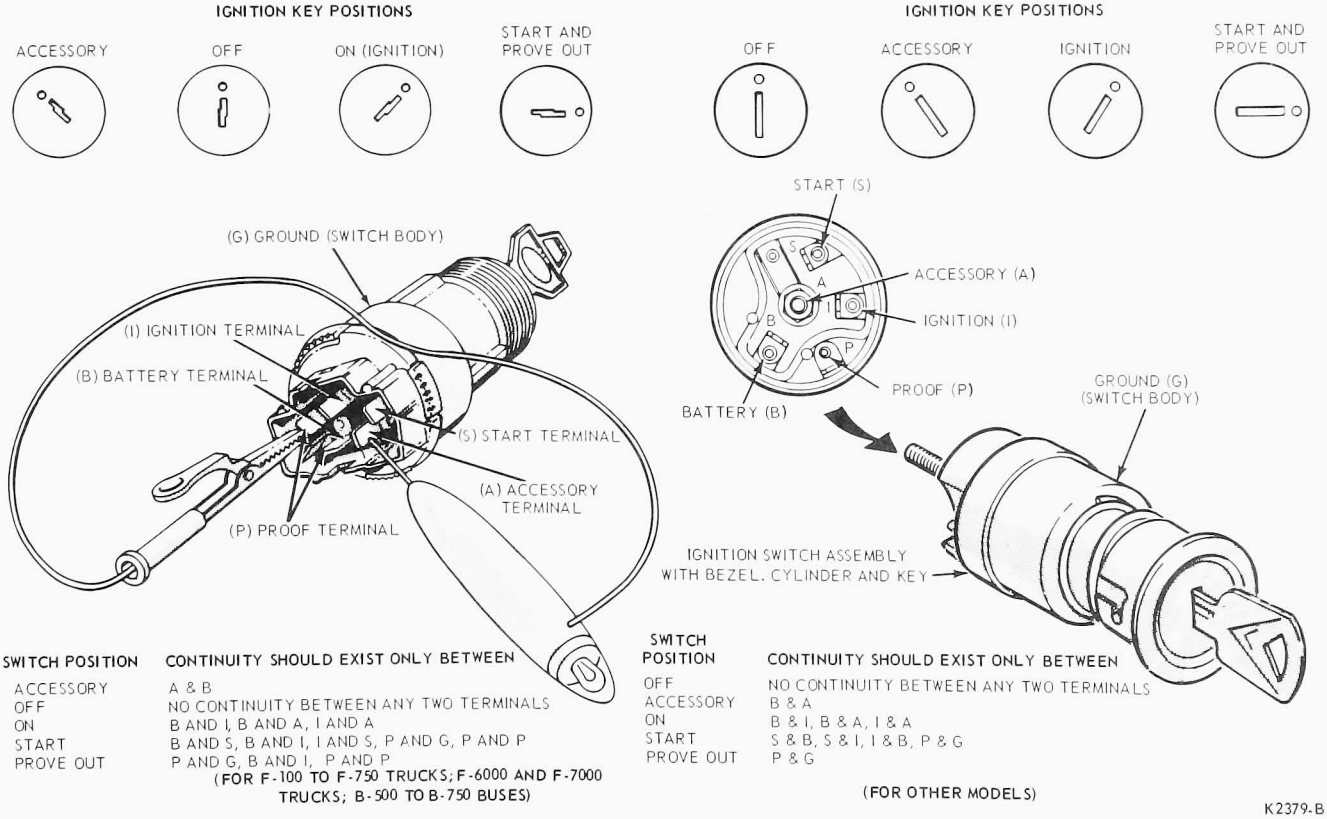

FIG. 1 Ignition Switch Continuity Test

REMOVAL AND INSTALLATION

IGNITION SWITCH

BRONCO, P-350-500

Removal

1. Disconnect the battery ground cable from the battery.
2. Turn the ignition key to the accessory position. Slightly depress the release pin in the face of the lock cylinder (Fig. 2), turn the key counterclockwise, and pull the key and lock cylinder out of the switch assembly. If only the lock cylinder is to be replaced, proceed to step 4 under Installation.
3. From under the instrument panel press in on the rear of the switch 1/8 turn counterclockwise (as viewed from the terminal end). Remove the bezel and switch. On Bronco and P-Series trucks also remove the retainer and spring.
4. Remove the nut from the back of the ignition switch. Remove the accessory and gauge feed wires from the accessory terminal of the switch. Pull off the insulated plug from the rear of the switch.

Installation

1. If a new ignition switch as well as the lock cylinder is to be installed, insert a screwdriver into the lock opening of the ignition switch and turn the slot in the switch to a full counterclockwise position.
2. Connect the insulated plug with wires to the back of the ignition switch. Position the accessory and gauge wires onto the ignition switch stud and install the retaining nut.
3. Place the bezel and switch in the switch opening, press the switch toward the instrument panel, and rotate it 1/8 turn to lock it in position.

Position the spring and retainer on the switch with open face of the retainer away from the switch. Place the switch to the switch opening. Press the switch toward the instrument panel and install the bezel.

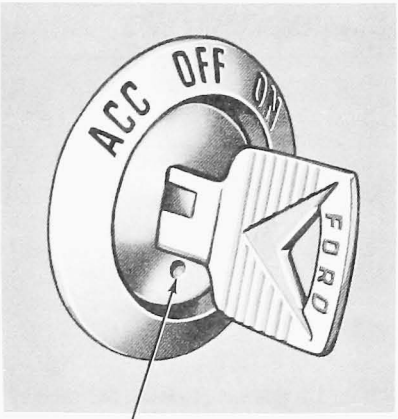

FIG. 2 Ignition Switch Removal

4. If a new lock cylinder is to be installed, insert the key in the cylinder and turn the key to the accessory position. Place the lock and key in the ignition switch, depress and release pin slight (Fig. 2), and turn the key counterclockwise. Push the new lock cylinder into the switch. Turn the key to check the lock cylinder operation.
5. Connect the battery cable and check the ignition switch operation.

ECONOLINE, F-100-350 SERIES AND BUSES

Removal

1. Disconnect the battery ground cable.
2. Insert the ignition key in the switch. Turn the key to the accessory position and insert a wire pin in the hole on the ignition switch. Slightly depress the pin while turning the key counterclockwise past the accessory position; this will release the lock cylinder from the switch assembly. Pull the lock cylinder from the switch with the key. If only the lock cylinder is to be replaced proceed to step 3 of the installation procedure.
3. Remove the bezel nut retaining the switch to the instrument panel and lower the switch.
4. Depress the tabs securing the multiple connector to the rear of the ignition switch with a modified tool 18918-A (Fig. 3). The modification of the tool consists of grinding the inside of the tool jaws to allow clearance around the rear of the switch. Pull the multiple connector from the switch and remove the switch.

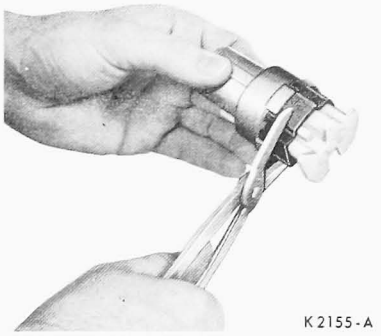

FIG. 3 Ignition Switch Connector Removal

Installation

1. Depress the tabs on the multiple connector and plug the connector into the switch assembly, being sure that the tabs lock in place.
2. Position the switch to the instrument panel and install the bezel nut.
3. Insert the key in the lock cylinder and turn the key to the accessory position. Place the cylinder and key in the switch. Push the cylinder into the switch until it is fully seated, then turn the key to the lock position. Turn the key to check the operation of the lock cylinder.
4. Connect the battery ground cable to the battery and check the operation of the switch assembly.

Main Wiring Harnesses and Circuit Protection

GROUP 34

	Page
PART 34-02	
Instrument Panel-to-Dash Wiring Harness	34-02-01
PART 34-11	
Left Side Dash Panel-to-Headlight Junction Wiring Harness	34-11-01
PART 34-12	
Right Side Dash Panel-to-Headlight Junction Wiring Harness	34-12-01
PART 34-31	
Fuses and Circuit Breakers	34-31-01

PART 34-02 Instrument Panel-To-Dash Wiring Harness

COMPONENT INDEX Applies to Models as Indicated	MODEL APPLICATION					
	Bronco	Econoline	F-100-350 Series	F- and B-500-750 Series	L-Series	C-Series
REMOVAL AND INSTALLATION	02-01	02-02	02-03	02-05	02-06	02-07

Numbers in the vertical column show page location.

REMOVAL AND INSTALLATION

BRONCO

Starting at the left headlight, the 14401 harness runs back along the left fender apron and through a grommet at the left side of the dash panel into the passenger compartment. From the left grommet, the harness runs along the lower edge of the instrument panel to a similar grommet on the right side of the dash. Through the right grommet, the harness returns to the engine compartment, runs along the right fender apron and terminates at the right headlight and the 14305 harness connector. Thus the 14401 wiring harness combines three main wiring harnesses in one (instrument panel-to-dash, left side dash-to-headlight junction, and right side dash-to-headlight junction).

Removal

1. Disconnect the battery ground cable.
2. Starting at the left side forward end of the engine compartment, disconnect the harness connectors to the left headlight, parking light, and side marker light. Disconnect the harness wire at the horn.
3. Working from front to rear, remove the harness from the retaining straps along the left fender apron.
4. Disconnect the two harness multiple connectors and one bullet connector at the rear of the left wheel housing.
5. Disengage the harness grommet from the hole in the left side of the dash; and pull the harness through the grommet hole into the passenger compartment.
6. Disconnect the harness multiple plugs at the dimmer switch and at the steering column connector. Disconnect the harness push-on connectors at the stop light switch and the harness connectors to the radio, heater and map light wires.
7. The harness branch loom that goes through the grommet at the center of the dash panel has to be disconnected from the engine side of the dash. Disconnect the multiple plug and (with 8-cylinder engine) the bullet connector. Disengage the grommet from the dash and push these wires and connectors through the grommet hole into the passenger compartment.
8. From inside the glove box, remove the two screws that attach the fuse panel cover and the fuse panel itself to the left end of the glove box.
9. Disengage the harness from the two clips at the instrument cluster assembly and from the four clips along the lower edge of the instrument panel.
10. Starting at the right side forward end of the engine compartment, disconnect the harness connectors to the right headlight, parking light

and side marker light.
11. Disconnect the three harness wires at the starter relay assembly, and disengage the three wire loom from the retaining strap. Note the wire color codes and relay terminals for proper installation.
12. Disconnect the harness multiple connector to the regulator.
13. Working from front to rear, remove the harness from the retaining straps along the right fender apron.
14. Disengage the harness grommet from the hole at the right side of the dash, and pull the harness through the grommet hole into the passenger compartment.
15. The harness can now be removed from the vehicle.

Installation

1. From inside the vehicle, push the left section of the harness through the grommet hole at the left side of the dash panel as far as the grommet, and then engage the grommet to the dash. The left section of the harness is the section where a loom with two multiple connectors and one bullet connector comes out of the harness just forward of the grommet.
2. Engage the harness to the two clips at the instrument cluster assembly and the four clips along the lower edge of the instrument panel.
3. Push the right section of the harness through the grommet hole at the right side of the dash panel as far as the grommet, and then engage the grommet to the dash.
4. Push the center loom (with connectors) through the grommet hole at the center of the dash as far as the grommet, and then engage the grommet to the dash.
5. Position the fuse panel to the outer left side of the glove box, and the panel cover to the inner side. Then secure both panel and cover to the glove box with two retaining screws.
6. Make the harness connections to the dimmer switch, stop light switch, radio, heater and map light.
7. Working in the engine compartment, route the left and right sections of the harness along the left and right fender aprons respectively, and secure them in place with the retaining straps. Connect all the harness connectors to the same points from which they were disconnected during the removal procedure. Connect the multiple connector and bullet connector from the loom at the center grommet.

ECONOLINE

Removal

1. Disconnect the battery ground cable.
2. Working up from underneath the left corner of the instrument panel, disconnect the five connectors joining the instrument panel wiring harness to the dash-to-headlight junction wiring harness and to the rear wiring harness. Disengage the wiring harness locator from the tab at the side panel adjacent to the connectors.
3. Disconnect the dimmer switch connector. Remove the two dimmer switch wire locators from the dash panel.
4. At the brake pedal support, disconnect the stop light switch connector, the hazard flasher unit connnector, and the ground wire. Disengage the harness locator from the support.
5. Remove the screws retaining the instrument cluster assembly to the instrument panel. Pull the cluster rearward and allow it to rest against the steering column. Disconnect the cluster wiring loom multiple connector.
6. Disconnect the six-wire multiple connector to the steering column wiring. If the vehicle has a manual transmission, disconnect the back-up light switch connector under the steering column support, and pull the wires through the clip on the lower edge of the instrument panel.
7. Open the two clips at the upper edge of the instrument cluster opening in the panel by turning out the screws normally concealed by the top rim of the cluster. Disengage the harness from the clips. If the vehicle has an automatic transmission, disconnect the back-up light connectors above the upper right corner of the cluster opening.
8. Remove the ignition switch (Part 33-71). If the harness is to be replaced, remove the multiple connector from the switch.
9. Remove the brake warning light socket from the panel. Disconnect the connector at the horn relay. Disconnect the multiple connectors at the headlight switch and the windshield wiper switch.
10. Disconnect the connectors at the cigar lighter and its light. Disconnect the heater wiring multiple connector.
11. Remove the fuse panel from the engine housing side panel. Remove the glove compartment for access, and remove the harness locators from the side panel and the right side of the dash panel.
12. If the vehicle is equipped with an automatic transmission and/or auxiliary heater, remove the five straps holding the harness to the back-up light and/or heater thermostat wires.
13. Disconnect the three multiple connectors from the wiring harnesses to the engine and right headlight at the upper right corner of the dash panel. Disconnect the heater terminal connector at the end of the harness, and remove the instrument panel-to-dash wiring harness from the vehicle.

Installation

1. If a new harness is to be installed, transfer the fuses to the new fuse panel and transfer the brake warning light bulb to the new socket.
2. Set the wiring harness in place, along the right side of the dash panel through the glove compartment opening. Attach the three harness locators to the dash panel ahead of the glove compartment. Install the three straps holding the harness together with the back-up light wires and/or auxiliary heater wires, if so equipped.
3. Connect the three multiple connectors at the right of the harness. Connect the right end of the harness to the heater terminals. Install the glove compartment.
4. Install the fuse panel to the engine housing side panel. Install the harness locator to the side panel and install the two remaining straps holding the back-up light and/or heater wires to the harness, if so equipped.
5. If the vehicle has an automatic transmission, connect the two connectors to the back-up light switch wires which are strapped to the right portion of the harness. Connect the connector to the heater switch wiring.
6. Engage the harness to the two clips at the top of the instrument cluster opening in the instrument panel. Connect the connectors to the cigar lighter and its light, if so equipped.
7. Connect the multiple connector to the ignition switch, if disconnected, and install the switch. Connect the multiple connectors to the windshield wiper switch and the headlight switch. Install the brake

indicator light socket and connect the connector to the horn relay. Connect the courtesy light and accessory feed plugs which emerge from the harness at the same point as the wiper wires.

8. Connect the multiple connector to the steering column wiring. If the vehicle has a manual transmission, engage the back-up light wires in the clip at the bottom of the panel and connect the connector to the back-up light switch.
9. Connect the ground wire and the stop light switch and hazard flasher connections at the brake pedal support.
10. Connect the multiple connector to the instrument cluster wiring loom. Move the instrument cluster into position and secure it with the cluster retaining screws. **Do not kink the speedometer cable.**
11. Route the dimmer switch wires down the dash panel, install the two locators and connect the connector to the dimmer switch. Fit the floor mat over the switch.
12. Press the harness locator into position in the tab in the side panel adjacent to the upper left corner of the instrument panel. Connect the five wiring connectors at the end of the harness. **Observe the color coding to insure correct installation.**
13. Connect the battery ground cable and check the operation of the instrument panel gauges, lights and controls.

F-100-350 TRUCKS

The 14401 wiring harness starts at the front of the left fender apron where it plugs into another harness that goes to the left headlight. From this point, it runs back through a grommet in the left side of the dash panel into the passenger compartment. From the left grommet, the harness continues across the instrument panel to a similar grommet at the right of center of the dash panel where it returns to the engine compartment and terminates in several connections on the right fender apron.

Removal

1. Disconnect the battery ground cable.
2. Starting at the front of the left fender apron disconnect the harness plug from the left headlight wiring harness.
3. Disconnect the harness plug from the windshield washer motor and remove the loom from the motor and reservoir assembly (clip and screw).
4. Disconnect the harness multiple plug from the 14405 harness at the engine side of the dash panel.
5. Disengage the harness grommet from the hole at the left side of the dash, and push the grommet through the hole so that the left section of the harness can later be pulled into the passenger compartment.
6. Starting at the front of the right fender apron, disconnect the three harness multiple plugs from their connectors (to the relay assembly, to the right headlight wiring harness, and to the engine and regulator wiring harness).
7. Disconnect the harness wires from the starting motor relay. Note the color code and terminals for correct installation.
8. Pull the harness locator from the hole in the right fender apron, and disengage the harness from the straps and clips. Disconnect the harness from the engine harness at the rear of the engine. Disengage the harness grommet from the hole in the right center side of the dash panel and push the grommet through the hole so that the right section of the harness can later be pulled into the passenger compartment.
9. Remove the instrument cluster (Part 33-51) and the glove compartment liner.
10. Disconnect the harness wiring from the right door jam (courtesy light) switch and pull the wire up through the hole in the right cowl panel.
11. Pull the right section of the harness (that was disconnected at the right fender apron in steps 6 through 8) through the grommet hole at the right center side of the dash.
12. Remove the wiring harness from the hook-shaped clip under the right side of the instrument panel pad (not used on cowl-chassis models). Open the harness retainer along center of the dash panel, and remove the harness from the retainer (Fig. 1).
13. Disconnect the harness connectors at the hazard flasher and, the stop light switch connector.
14. Disconnect the dimmer switch connector.
15. Remove the screws retaining the fuse panel to the dash panel.
16. Disconnect the harness connectors to the steering column wiring, ignition switch, headlight switch, windshield wiper switch and cigar lighter and ash tray light, if installed. Remove the wiper switch illumination bulb from the rear side of the instrument panel (Fig. 2). Remove the screw retaining the grounded black wire terminal to the body structure. Disengage the harness from the retaining clips. (Fig. 2)
17. Disconnect the harness from the turn signal flasher, fuel sender wire(s), dome lightwire and the heater control assembly.
18. Disconnect the harness wiring from the left door jam (courtesy light) switch, and pull the wire up through the hole in the left cowl panel.
19. Pull the left section of the harness from the engine compartment through the grommet hole at the left side of the dash into the passenger compartment. Remove the harness from the vehicle.

Installation

1. If installing a new wiring harness, transfer fuses, clips and wiper switch illumination bulb components to the new assembly as required.
2. Position the harness under the instrument panel. Push the right section of the harness (the end with three multiple connectors and three push-on connectors) through the grommet hole (at the right center side of the dash panel) into the engine compartment as far as the grommet. Engage the grommet in the hole.
3. Route the other right branch of the harness through the opening in the right cowl panel and connect it to the right door jam (courtesy light) switch.
4. Install the wiring harness in the retainers at the right side of the instrument panel. On all except cowl-chassis models, engage the wiring assembly in the hook-shaped clip at the extreme right of the panel. On cowl-chassis models, attach the harness clips to the upper lip of the instrument panel with two bolts and nuts and torque to 25-35 in-lbs.
5. Install the glove compartment liner.
6. Continuing from right to left, install the remainder of the wiring harness clips. On all except cowl-chassis models, engage the wiring harness in the clips on the steering column support.
7. Push the left section of the harness (with connectors) through the hole at the left side of the dash panel and into the engine compartment as far as the grommet. Engage the grommet in the hole.
8. Connect the harness connectors to the steering column wiring, ignition switch, headlight switch, windshield wiper switch, cigar lighter and ash tray light as applicable. Install the wiper switch illumination light to the instrument panel. Install the

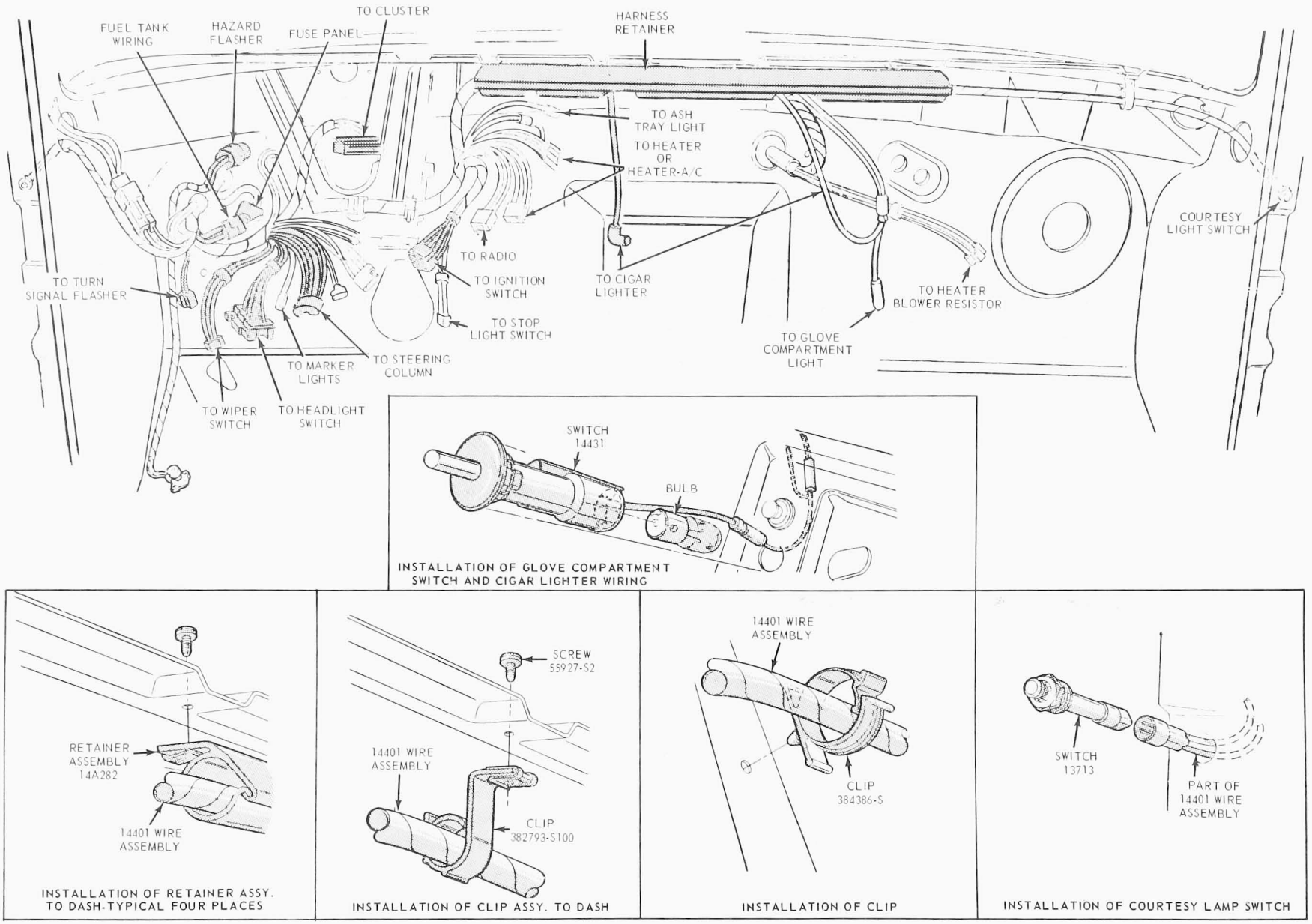

FIG. 1 F-100 through F-350 Truck 14401 Harness Routing.

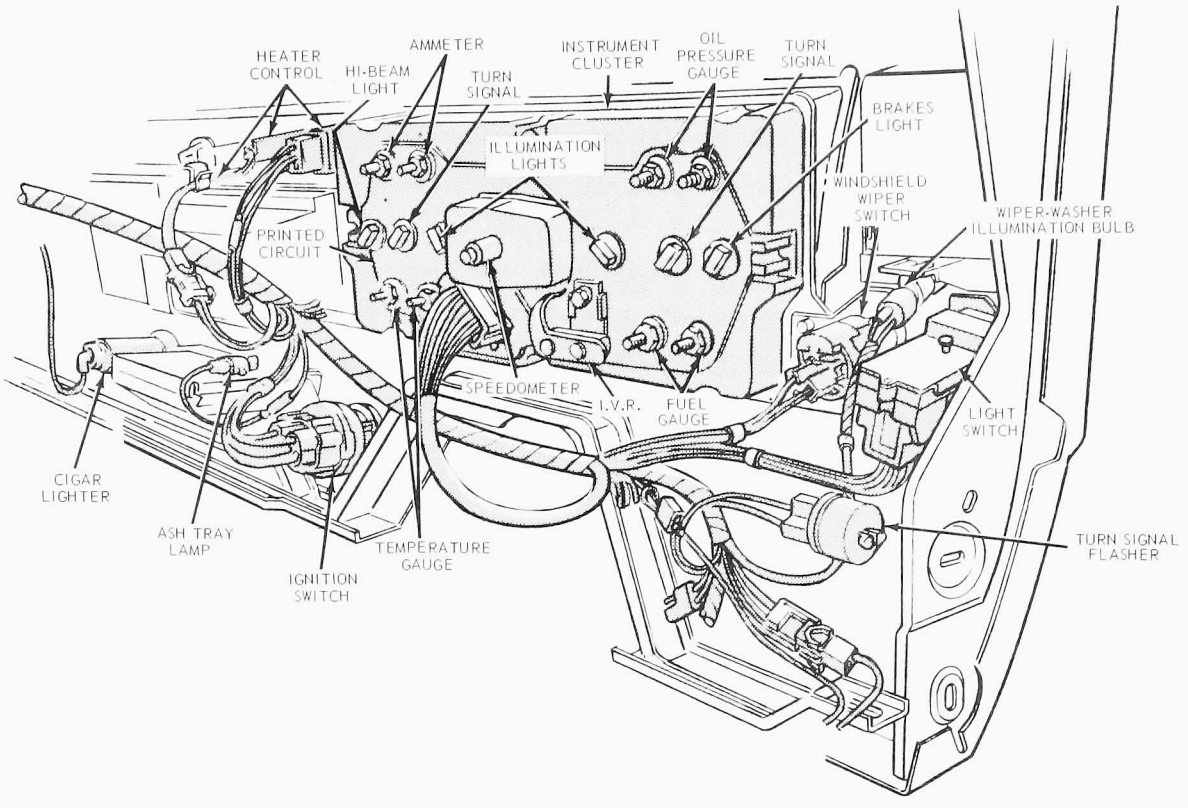

FIG. 2 F-100 Through F-350 Instrument Panel Wiring

black grounded wire terminal to the instrument panel structure with the screw.

9. Connect the harness to the turn signal flasher, fuel sender wire(s), dome light wire and the heater control assembly.
10. Install the fuse panel to the dash panel with two retaining screws.
11. Connect the harness connector to the dimmer switch.
12. Connect the harness connectors to the hazard flasher and, the stop light switch connector.
13. Route the left branch of the wiring harness through the opening in the left cowl panel, and connect it to the left door jam (courtesy light) switch.
14. Install the instrument cluster (Part 33-51).
15. Now working in the engine compartment, route the left section of the harness along the left fender apron, and connect the harness multiple plug to the 14405 harness near the dash panel.
16. Connect the harness plug to the windshield washer motor and route wiring under windshield washer reservoir. Install locators in holes in fender apron.
17. Connect the harness plug to the left headlight harness connector at the center of the left fender apron.
18. Connect the two harness looms coming out of the grommets at the left center area of the dash (multiple plug and bullet connectors).
19. Engage the locators of the harness right section in the holes in the right fender apron.
20. Connect the three harness wires to the starting motor relay terminals. Follow the color code and terminal connections as noted during the removal procedure.
21. At the center of the right fender apron, connect the three harness multiple plugs to their respective connectors (from the relay assembly, from the right headlight wiring harness, and from the engine and regulator wiring harness).
22. Connect the battery ground cable and check the operation of all switches, gauges and other electrical equipment connected to the dash panel-to-instrument panel wiring harness.

F-AND B-500-750 SERIES TRUCKS

Removal

1. Disconnect the battery ground cable.
2. Disconnect the socket from the right headlight. Then, remove the ground wire screw from the right side of the radiator support.
3. Disconnect the horn wire and right turn signal light from the harness at the radiator support. Then, disengage the wire locator and pull the harness into the engine compartment through the opening in the radiator support.
4. Disconnect the multiple connector from the charging system harness and the harness wires from the starter solenoid. Then, remove the harness from the strap clamps and push the dash panel grommet into the cab from the engine compartment.
5. Disconnect the harness from the left headlight and the left turn signal light. Remove the ground wire screw from the radiator support.
6. Disconnect the harness from the junction block on the left fender splash shield.
7. Disconnect the connectors at the left side of the dash panel. Then, push the grommet from the dash panel into the cab.
8. Disconnect the harness connectors at the center of the dash panel behind the engine. Push the harness grommet out of the dash panel into the cab.
9. Working inside the cab, disconnect the harness wires from the right door jamb switch, if so equipped.

10. Remove the glove box liner and instrument cluster from the instrument panel.
11. On Conventional truck models, remove the screws retaining the fuse panel to the side cowl panel. Disconnect the wiring harness from the right door jam (courtesy light) switch and pull the wire up through the grommet in the right cowl panel.

On cowl-chassis trucks and buses, remove the nut from the junction block post on the right cowl side panel and disconnect the single-wire connectors for both black wires of the harness. Also disconnect the two black-white stripe wires from the terminal posts on the adjacent circuit breaker.

12. Remove the screws or stud nuts retaining the harness clips to the instrument panel and work the harness toward the left side of the cab. On conventional truck models, two clips must be removed from the steering column support.
13. Disconnect the connectors to all instrument panel switches connected to the wiring harness. Remove the dual brake indicator light assembly from the instrument panel.
14. Disconnect the turn signal switch connector at the bottom of the steering wheel hub. Carefully remove the two steering column clips that retain the switch wires and (on conventional trucks only) disengage the wires from the clips on the left side of the steering column support bracket.
15. Disconnect the wires from the transistorized flasher unit. Disconnect the black ground wire terminal retained to the instrument panel structure by a screw.
16. Disconnect the headlight dimmer switch wiring connector (it may be necessary to remove the switch first), and (on cowl-chassis trucks and buses only) disconnect the black wire from the junction block post at the left cowl side panel.
17. Disconnect all connectors of the harness at the upper left corner of the dash panel. Disconnect the harness wiring from the left door jam (courtesy light) switch, and pull the wire up through the grommet in the left cowl panel. Remove the wiring harness.

Installation

1. If installing a new wiring harness, transfer fuses, clips and dual brake indicator light components to the new harness as required.
2. Position the wiring harness under the instrument panel.
3. Route the engine compartment ends of the harness through the openings in the dash panel, and seat the grommet in the hole at each location.

On conventional model trucks, install the fuse panel to the right cowl side panel and connect the multiple connector to the relay. Route the right end of the harness through the opening in the right cowl panel and connect it to the right door jam (courtesy light) switch. Position the grommet in the opening.

On cowl-chassis trucks and buses, install the two single black wires to the post of the separate junction block on the cowl side panel. Install the two black-white stripe wires to the terminal posts on the adjacent circuit breaker, with the shorter wire going to the top post.

4. Install the screws or stud nuts retaining the wiring harness clips to the right and center areas of the instrument panel. On conventional trucks, also install two retaining clips on the steering column support.
5. Install the glove compartment.
6. Connect the connector to the stop light switch wiring.
7. Connect the harness connectors to all instrument panel electrical switches. Install the dual brake indicator light.
8. Plug the turn signal switch wiring connector into the socket at the bottom of the steering columm hub. Route the wires along the top left of the steering column and install the two retaining clips to the column. On conventional trucks, engage the wires in the clips on the left side of the steering column support bracket and tighten the screws retaining the clips.
9. Connect the wires to the flasher unit terminals. Attach the terminal of the black ground wire to the instrument panel structure with the screw.
10. Connect the headlight dimmer switch wiring connector. On cowl-chassis trucks and buses, connect the black wire terminal to the junction block post at the left cowl side panel.
11. Connect all harness connectors at the upper left corner of the dash panel.

Route the left end of the wiring assembly (with grommet) through the opening in the left cowl panel, and connect it to the left door jam (courtesy light) switch. Position the grommet in the opening.

12. Install the instrument cluster and wiring assembly (Part 33-51).
13. Connect the harness connectors at the center of the dash panel behind the engine.
14. Route the harness along the left fender apron, and connect the connector to the left headlight. Connect the harness to the left turn signal and the ground wire to the radiator support.
15. Connect the harness to the junction block on the left fender splash shield. Connect the connectors at the left side of the dash panel.
16. Route the harness along the right fender apron and position the harness in the strap clamps. Push the harness locators into the locator holes.
17. Connect the harness to the horns, turn signal light and headlight bulb. Connect the ground wire to the radiator support with one screw.
18. Connect the harness wires to the starter solenoid and the harness connector to the charging system wire harness.
19. Connect the battery ground cable and check the operation of all switches, gauges and other electrical equipment connected to the 14401 wiring harness.

L-SERIES TRUCKS

The rear terminals of this harness start at a junction block which is mounted on the right inner side of the cab rear panel behind the passenger seat. From the junction block, the harness is routed forward under the right door sill.

On city delivery models, the harness continues from under the right door sill up to the right side of the dash panel where the fuse panel (which is part of the harness assembly) is mounted.

On Line Haul models, the harness is routed from under the door sill up along the right door front pillar to the fuse panel at the right side of the instrument panel.

On all models, the harness continues from the fuse panel to the left behind the instrument panel, where its branch wires connect to the various instruments and controls, and then it comes out into the engine compartment through an opening at the upper left side of the dash panel. The forward terminals of the harness connect to the junction block that is mounted to the upper engine side of the dash panel.

1. Disconnect the battery ground cable. Remove the cover from the junction block at the cab rear panel. Remove the retaining nuts and disconnect the harness wires from the junction block terminal posts. The color codes of the wires relative to the terminal posts should be

carefully noted for correct installation.

2. Remove the harness retaining clip from the floor pan in back of the door opening (1 screw) and the cover from the side of the right door sill.
3. **On City Delivery models,** remove the harness cover from the floor pan forward of the door opening (2 retaining screws). Remove the clips that retain the harness to the inner side of the dash panel. At the fuse panel, disconnect the wires coming from another wiring harness, and remove the fuse panel from the dash panel (2 retaining screws).

On Line Haul models, remove the metal retainer that carries the harness up along the right door front pillar (3 retaining screws). Remove the fuse panel cover from the right side of the instrument panel, remove the retaining nuts, and disconnect the harness wires from the fuse panel terminal posts. The color codes of the wires relative to the terminal posts should be carefully noted for correct installation.

4. Remove the retaining screws and swing the instrument cluster sections away from the instrument panel for access. Disconnect the harness connectors to the turn signal/hazard flasher switch, the cigar lighter, the light switch, the ignition switch, the dimmer switch and the roof marker lights.
5. Disconnect all other harness connections to the instrument cluster and panel. These connections will vary with the individual vehicle according to model and equipment used. Carefully note these connections for correct installation.
6. Open the cover of the junction box on the engine side of the dash panel. Remove the retaining nuts and disconnect the harness wires from the junction block terminal posts. The color codes of the wires relative to the terminal posts (Figs. 3, 4 and 5) should be carefully noted for correct installation.
7. Disengage the harness from the retaining clips on the engine side of the dash panel and pull the forward end of the harness back through the dash panel opening into the drivers compartment. Work the harness to the right behind the instrument panel and out of the vehicle.
8. If the harness is being replaced, transfer all retaining clips to the new assembly. On City Delivery models, also transfer the fuses to the new fuse panel which is part of the harness assembly.
9. Work the forward end of the new harness in behind the instrument panel from right to left and then up through the opening at the upper left side of the dash panel. Work the rearward end of the harness under the right door sill and back to the junction block at the cab rear panel.
10. Make all the harness wiring connections according to the correct color code-to-terminal and connector relationship as noted during removal. Attach all the retaining clips to their proper location.

C-SERIES TRUCKS

Removal

1. Remove the battery cover and disconnect the battery ground cable(s).
2. Disconnect the two connectors to the right front turn signal light and remove the wiring harness from the two clips at the right side of the dash panel.
3. Disconnect the multiple connector to the relay wiring and the two single connectors to the buzzer mounted at the center of the dash panel. Disconnect the red and red-black stripe wire connectors to the stop light switch above the relay and buzzer on tractor units. Disconnect the multiple connectors of the branch leading down to the under-cab wiring assembly which extends upward from the center of the floor. Lift the wiring harness from the two clips at the center of the dash panel.
4. Disconnect the speedometer and tachometer cables at the instrument cluster. Remove the screws retaining the cluster to the instrument cluster housing, and tilt the cluster rearward enough to gain access to the wiring.
5. Disconnect the three multiple connectors to the instrument cluster wiring assembly. Disconnect the wires for the tachometer light, air gauge or vacuum gauge light, and cigar lighter light from the connector at the two blue-red stripe wires of the wiring harness.
6. Remove the nut from the terminal block post on the dash panel above the fuse panel. Remove the three wire terminals from the post, disengage the long black wire from the clip and remove the wire from the ammeter loops at the back left of the instrument cluster.
7. Disconnect the harness connectors at the ignition switch, marker light switch, headlight switch and cigar lighter. Disconnect the black wire connector to the roof marker lights. Adjacent to the ignition switch connector, also disconnect the red-blue stripe wire from one two-wire connector and disconnect the red-yellow stripe wire and the red-green stripe wire from the other two-wire connector, if so equipped. Disconnect the connector for the two orange wires from the fuel tank sending unit wire.
8. Disconnect the brown wire from the heater switch. Disconnect the connector to the back-up light switch wiring. Disconnect the connectors to the stop light switch. Disconnect the connector to the air pressure switch, if so equipped.
9. Disconnect the turn signal switch multiple connector at the top of the steering column hub or below the separate turn signal switch mounted at the side of the column. Remove the two clips from the steering column and disengage the wiring assembly branch from the clip under the steering column support bracket at the base of the instrument panel.
10. Disconnect the connector at the headlight dimmer switch and disengage the harness branch from the two clips on the dash panel.
11. Disconnect the wires to the two-speed axle circuit breaker at the upper right corner of the fuse panel. Remove the three screws retaining the fuse panel to the dash panel, and remove the fuse panel.
12. Disconnect the harness multiple connectors at the upper left corner of the cab floor. Disconnect the headlight wiring connector above the floor. If equipped with a fuel shut-off circuit breaker on the cowl side panel, disconnect the wires to the circuit breaker terminal posts. Remove the screws retaining the two harness clips to the cowl side panel. Disconnect the harness connectors at the transistorized flasher unit on the cowl side panel and disconnect the black-blue stripe wire connector to the dome light wire. Disconnect the connectors to the left front turn signal light wiring.

Installation

1. If installing a new wiring harness, transfer fuses, clips, etc. to the new assembly, as required.
2. Install the fuse panel to the dash panel with the three retaining screws. Connect the wiring harness multiple connectors at the upper left corner of the cab floor, including the

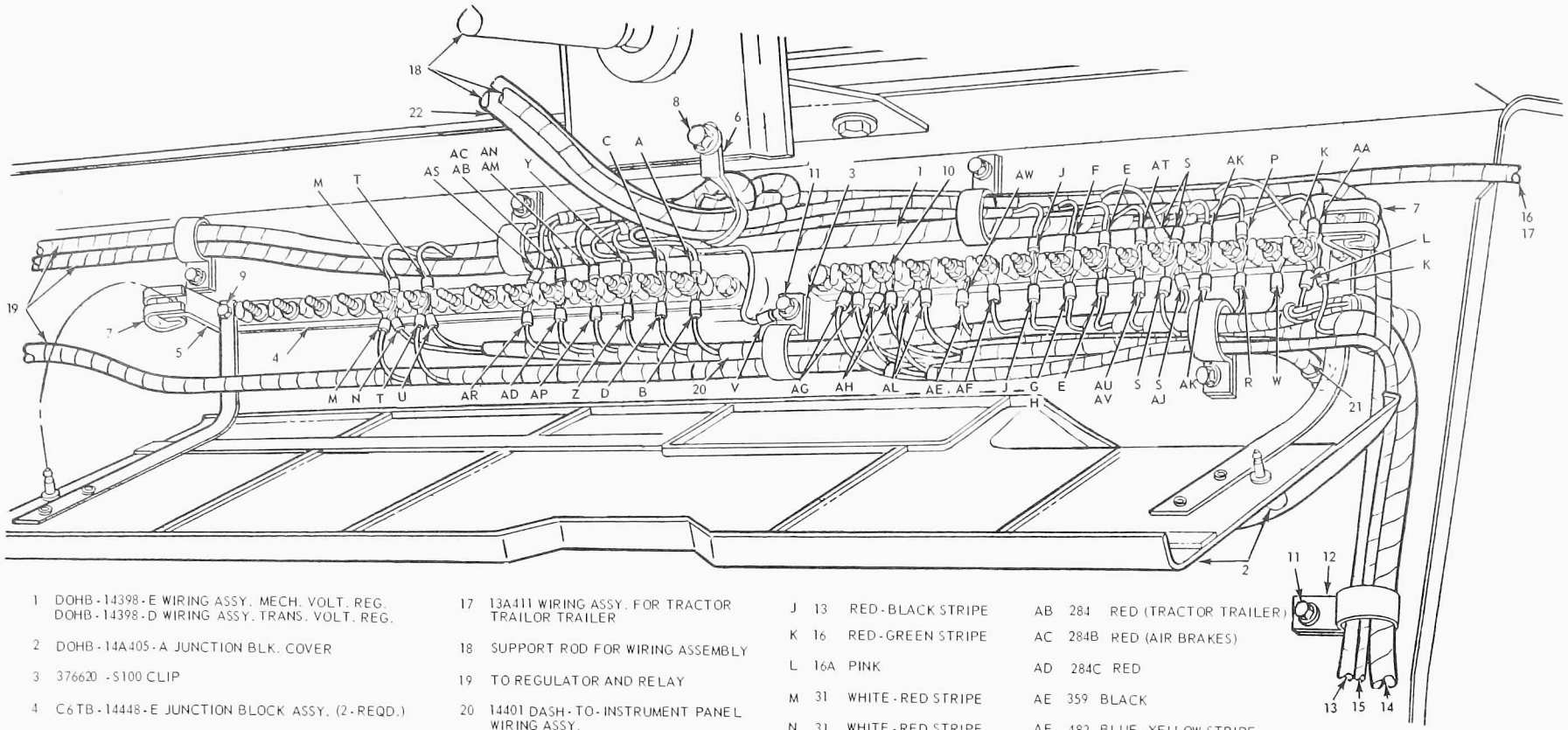

1 DOHB-14398-E WIRING ASSY. MECH. VOLT. REG.
DOHB-14398-D WIRING ASSY. TRANS. VOLT. REG.

2 DOHB-14A405-A JUNCTION BLK. COVER

3 376620-S100 CLIP

4 C6TB-14448-E JUNCTION BLOCK ASSY. (2-REQD.)

5 DOHB-14A298-B JUNCTION BLK. BRACKET (2-REQD.)

6 352515-S100 CLIP

7 383332-S STUD RECEPTACLE (2-REQD.)

8 EXISTING PART

9 55915-S36X SCREW (4-REQD.)

10 34655-S36 NUT & WASHER ASSY. (22-REQD.)

11 55961-S2 SCREW (6-REQD.)

12 378674-S CLIP (5-REQD.)

13 14305 WIRING ASSY. FOR 6 CYL. ENGINE

14 14305 WIRING ASSY. FOR 8 CYL. ENGINE

15 9A281 WIRING ASSY. FOR 8 CYL.

16 13A612 WIRING ASSY. FOR AIR BRAKES

17 13A411 WIRING ASSY. FOR TRACTOR TRAILOR TRAILER

18 SUPPORT ROD FOR WIRING ASSEMBLY

19 TO REGULATOR AND RELAY

20 14401 DASH-TO-INSTRUMENT PANEL WIRING ASSY.

21 9A342 WIRING ASSY.

22 14290 DASH-TO-HEADLIGHT JUNCTION WIRING ASSEMBLY

A 2 WHITE-BLUE STRIPE

B 2A WHITE-BLUE STRIPE

C 3 GREEN-WHITE STRIPE

D 3A GREEN-WHITE STRIPE

E 11 BLACK-YELLOW STRIPE

F 12 GREEN-BLACK STRIPE

G 12 GREEN-BLACK STRIPE (CITY DELIVERY)

H 12A GREEN-BLACK STRIPE (LINE HAUL)

J 13 RED-BLACK STRIPE

K 16 RED-GREEN STRIPE

L 16A PINK

M 31 WHITE-RED STRIPE

N 31 WHITE-RED STRIPE (CITY DELIVERY)

P 32 RED-BLUE STRIPE

R 32A RED-BLUE STRIPE

S 37 BLACK-YELLOW STRIPE

T 39 RED-WHITE STRIPE

U 39 RED-WHITE STRIPE (CITY DELIVERY)

V 57 BLACK

W 69 RED-GREEN STRIPE

Y 207 BLACK

Z 207B BLACK

AA 262 BROWN

AB 284 RED (TRACTOR TRAILER)

AC 284B RED (AIR BRAKES)

AD 284C RED

AE 359 BLACK

AF 482 BLUE-YELLOW STRIPE

AG 596 BLACK

AH 597 RED

AJ 654 YELLOW

AK 655 RED-ORANGE STRIPE

AL 787 RED-BROWN STRIPE

AM 810 RED-BLACK STRIPE (TRACTOR TRAILER)

AN 810B RED-BLACK STRIPE (AIR BRAKES)

AP 810C RED-BLACK STRIPE

AR 870 BLACK

AS 870 BLACK (TRACTOR TRAILER)

AT 904 GREEN-RED STRIPE

AU 904 GREEN-RED STRIPE (CITY DELIVERY)

AV 904A GREEN-RED STRIPE (LINE HAUL)

AW BLUE INSULATOR

K2511-A

FIG. 3 Dash Panel Junction Blocks—L-Series with Gas Engines Except 401, 477 and 534

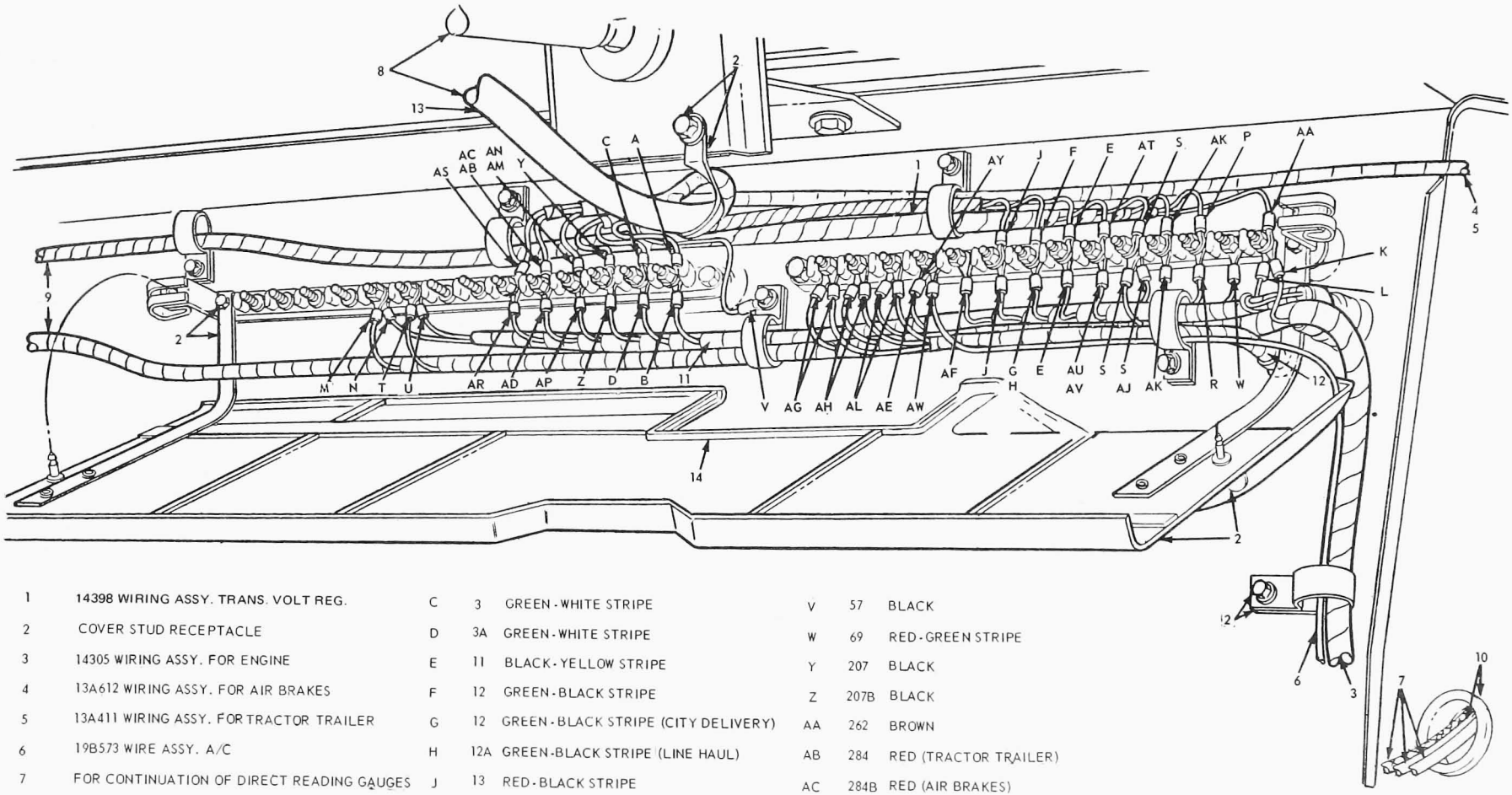

1	14398 WIRING ASSY. TRANS. VOLT REG.	C	3	GREEN-WHITE STRIPE	V	57	BLACK				
2	COVER STUD RECEPTACLE	D	3A	GREEN-WHITE STRIPE	W	69	RED-GREEN STRIPE				
3	14305 WIRING ASSY. FOR ENGINE	E	11	BLACK-YELLOW STRIPE	Y	207	BLACK				
4	13A612 WIRING ASSY. FOR AIR BRAKES	F	12	GREEN-BLACK STRIPE	Z	207B	BLACK				
5	13A411 WIRING ASSY. FOR TRACTOR TRAILER	G	12	GREEN-BLACK STRIPE (CITY DELIVERY)	AA	262	BROWN				
6	19B573 WIRE ASSY. A/C	H	12A	GREEN-BLACK STRIPE (LINE HAUL)	AB	284	RED (TRACTOR TRAILER)				
7	FOR CONTINUATION OF DIRECT READING GAUGES	J	13	RED-BLACK STRIPE	AC	284B	RED (AIR BRAKES)				
8	SUPPORT ROD FOR WIRING ASSEMBLY	K	16	RED-GREEN STRIPE	AD	284C	RED	AN	810B	RED-BLACK STRIPE (AIR BRAKE)	
9	TO REGULATOR AND RELAY	L	16A	PINK	AE	359	BLACK	AP	810C	RED-BLACK STRIPE	
10	INST. PANEL WIRING AND DIRECT GAUGE TUBES	M	31	WHITE-RED STRIPE	AF	482	BLUE-YELLOW STRIPE	AR	870	BLACK	
11	14401 DASH-TO-INST. PANEL WIRING ASSY.	N	31	WHITE-RED STRIPE (CITY DELIVERY)	AG	596	BLACK	AS	870	BLACK (TRACTOR TRAILER)	
12	9A342 WIRING ASSY	P	32	RED-BLUE STRIPE	AH	597	RED	AT	904	GREEN-WHITE STRIPE	
13	14290 DASH-TO-HEADLIGHT JUNCTION WIRING ASSY	R	32A	RED-BLUE STRIPE	AJ	654	YELLOW	AU	904	GREEN-RED STRIPE (CITY DELIVERY)	
14	REMOVE KNOCKOUT	S	37	BLACK-YELLOW STRIPE	AK	655	RED-ORANGE STRIPE	AV	904A	GREEN-RED STRIPE (LINE HAUL)	
A	2 WHITE-BLUE STRIPE	T	39	RED-WHITE STRIPE	AL	787	RED-BROWN STRIPE	AW	B	BLACK	
B	2A WHITE-BLUE STRIPE	U	39	RED-WHITE STRIPE (CITY DELIVERY)	AM	810	RED-BLACK STRIPE (TRACTOR TRAILER)	AY		BLUE INSULATOR	

K2512-B

FIG. 4 Dash Panel Junction Blocks—L-Series with 401, 477 and 534 Gas Engines

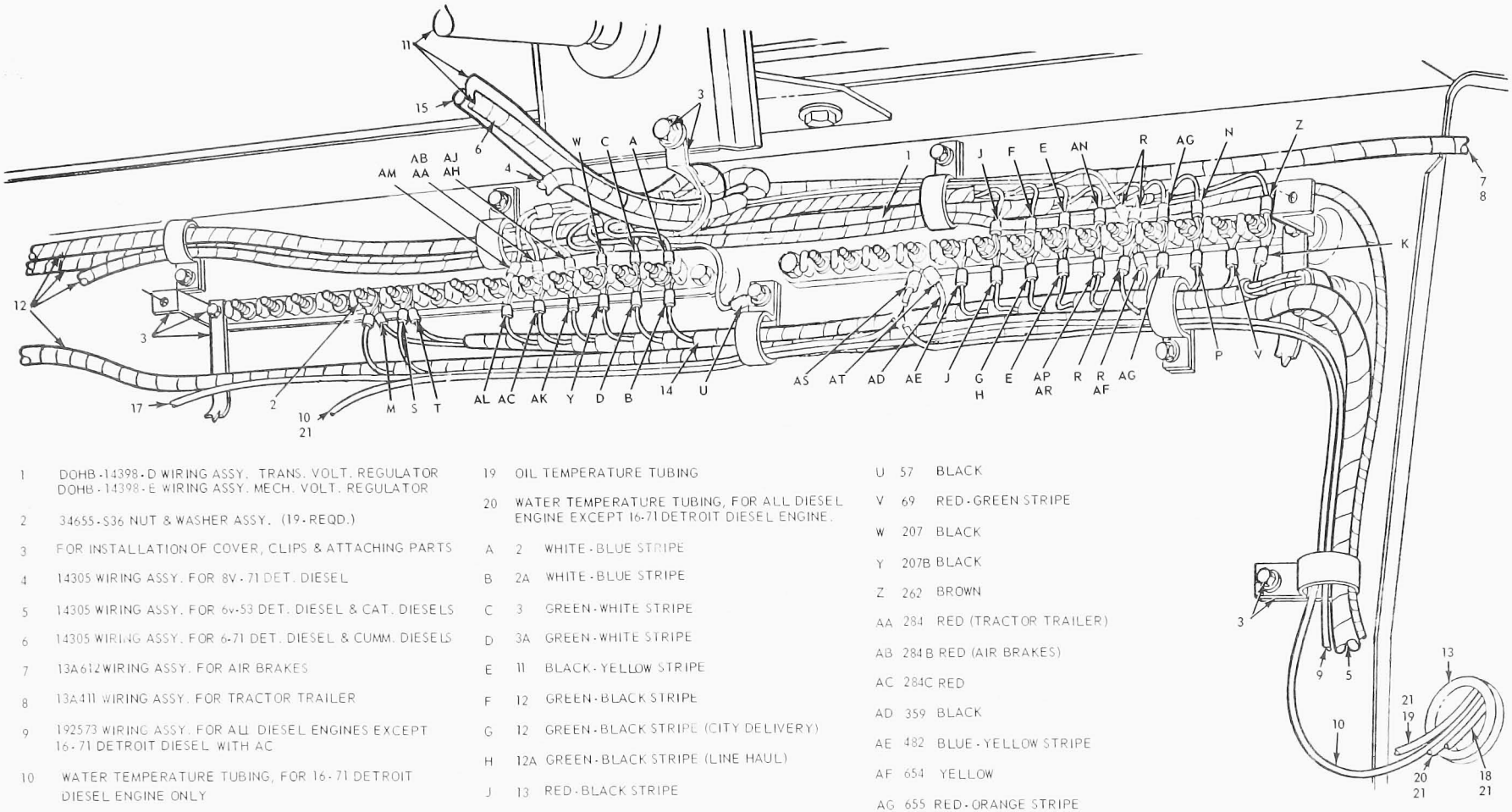

1 DOHB-14398-D WIRING ASSY. TRANS. VOLT. REGULATOR
DOHB-14398-E WIRING ASSY. MECH. VOLT. REGULATOR

2 34655-S36 NUT & WASHER ASSY. (19-REQD.)

3 FOR INSTALLATION OF COVER, CLIPS & ATTACHING PARTS

4 14305 WIRING ASSY. FOR 8V-71 DET. DIESEL

5 14305 WIRING ASSY. FOR 6v-53 DET. DIESEL & CAT. DIESELS

6 14305 WIRING ASSY. FOR 6-71 DET. DIESEL & CUMM. DIESELS

7 13A612 WIRING ASSY. FOR AIR BRAKES

8 13A411 WIRING ASSY. FOR TRACTOR TRAILER

9 192573 WIRING ASSY. FOR ALL DIESEL ENGINES EXCEPT 16-71 DETROIT DIESEL WITH AC

10 WATER TEMPERATURE TUBING, FOR 16-71 DETROIT DIESEL ENGINE ONLY

11 SUPPORT ROD FOR WIRING ASSY.

12 TO REGULATOR AND RELAY

13 INST. PANEL WIRING AND DIRECT GAUGE TUBES

14 14401 DASH-TO-INST. PANEL WIRING ASSY.

15 14290 DASH-TO-HEADLIGHT JUNCTION WIRING ASSY.

16 11A003 WIRING ASSY., FOR ALL DIESEL ENGINES EXCEPT V8 MID-RANGE CAT. DIESEL ENGINES

17 19P573 WIRING ASSY., FOR 16-71 DETROIT DIESEL ONLY

18 OIL PRESSURE TUBING

19 OIL TEMPERATURE TUBING

20 WATER TEMPERATURE TUBING, FOR ALL DIESEL ENGINE EXCEPT 16-71 DETROIT DIESEL ENGINE.

A 2 WHITE-BLUE STRIPE

B 2A WHITE-BLUE STRIPE

C 3 GREEN-WHITE STRIPE

D 3A GREEN-WHITE STRIPE

E 11 BLACK-YELLOW STRIPE

F 12 GREEN-BLACK STRIPE

G 12 GREEN-BLACK STRIPE (CITY DELIVERY)

H 12A GREEN-BLACK STRIPE (LINE HAUL)

J 13 RED-BLACK STRIPE

K 16A PINK

L 31 WHITE-RED STRIPE (CAT. DIESEL)

M 31 WHITE-RED STRIPE (CITY DELIVERY)

N 32 RED-BLUE STRIPE

P 32A RED-BLUE STRIPE

R 37 BLACK-YELLOW STRIPE

S 39 RED-WHITE STRIPE (CAT. DIESEL)

T 39 RED-WHITE STRIPE (CITY DELIVERY)

U 57 BLACK

V 69 RED-GREEN STRIPE

W 207 BLACK

Y 207B BLACK

Z 262 BROWN

AA 284 RED (TRACTOR TRAILER)

AB 284B RED (AIR BRAKES)

AC 284C RED

AD 359 BLACK

AE 482 BLUE-YELLOW STRIPE

AF 654 YELLOW

AG 655 RED-ORANGE STRIPE

AH 810 RED-BLACK STRIPE (TRACTOR TRAILER)

AJ 810B RED-BLACK STRIPE (AIR BRAKES)

AK 810C RED-BLACK STRIPE

AL 870 BLACK

AM 870 BLACK (TRACTOR TRAILER)

AN 904 GREEN-RED STRIPE

AP 904 GREEN-RED STRIPE (CITY DELIVERY)

AR 904A GREEN-RED STRIPE (LINE HAUL)

AS B BLACK

AT BLUE INSULATOR

K2513-A

FIG. 5 Dash Panel Junction Blocks—L-Series with Diesel Engine

connector to the headlight wiring assembly.

3. Work the wiring harness into position under the instrument panel, engaging it in the one hook-shaped clip on the left side of the dash panel and the four hook-shaped clips at the center and right side of the dash panel. Connect the two connectors to the right front turn signal light wiring.
4. Connect the green-yellow stripe wire of the two-speed axle circuit to the top terminal post of the circuit breaker in the top right corner of the fuse panel. Connect the green wire to the bottom terminal post of the circuit breaker.
5. Engage the dash panel-to-instrument panel wiring harness, together with the other wiring harnesses which are routed along the left cowl side panel, in the two clips. Attach the two clips to the left cowl side panel with the clip retaining screws. Connect the red-white stripe wire to the terminal nearest the top corner of the flasher unit on the cowl side panel. Connect the blue wire to the remaining terminal of the flasher unit. Connect the adjacent black-blue stripe wire to the dome light feed wire. If equipped with a fuel shut-off circuit breaker mounted adjacent to the lower wiring assembly clip on the cowl side panel, connect the terminal for the red-green stripe wire and the orange-blue stripe wire to the forward terminal post of the circuit breaker. Connect the green-red stripe wire to the rear terminal post.
6. Connect the connectors for the left front turn signal light wiring. Connect the connector and the terminal for the two black-green stripe wires to the ignition switch. At the harness branch leading to the ignition switch, connect the connector of the two red-blue stripe wires to the separate red-blue stripe wire. To the other two-wire connector, connect the red-yellow stripe wire and the red-green stripe wire, if so equipped. Attach the orange-green stripe wire terminal to the air pressure switch on the air manifold with the screw and washer, if so equipped.
7. Connect the two black wires to the marker light switch terminals, and connect the remaining black wire to the roof marker light wire. Connect the connector for the two orange wires that branch out from the wiring harness trunk at the same point as the marker switch wires connect to the orange wire of the fuel tank sending unit circuit. Connect the adjacent red-brown stripe wire to the two-wire connector for the red and red-brown stripe wires of the wiring assembly from the primer switch.
8. Connect the multiple connector to the headlight switch. Connect the red wire from the same branch to the rear terminal of the adjacent stop light switch, and connect the red-black stripe wire to the forward terminal of the switch, if so equipped.
9. Connect the push-on connector of the blue-white stripe wire to the cigar lighter terminal. Connect the bulb leads from the cigar lighter, tachometer, and air pressure or vacuum gauge to the connector of the two blue-red stripe wires coming out of the harness.
10. Connect the three multiple connectors to the instrument cluster wiring assembly. Route the black wire from the same branch through the ammeter loops from left to right and then to the junction block on the left side of the dash panel. Place the lock washer on the post of the junction block, followed by the terminal for the short length of black-yellow stripe wire and the terminal for the short lengths of black and black-orange stripe wires extending from the adjacent harness trunk. Then place the ammeter wire terminal on the post and install the retaining nut.
11. Connect the connector to the headlight dimmer switch. Install the dimmer switch branch wires in the two clips at the dash panel.
12. Connect the multiple connector to the turn signal switch. Engage the harness branch in the clip under the steering column support bracket at the base of the instrument panel. Install the two clips to retain the wires along the left side of the steering column.
13. Connect the brown wire connector to the heater switch. Connect the two-wire connector to the back-up light switch wiring.
14. Attach the three harness clips to the dash panel with the screws and flat washers. Retain the pink resistance wire within the loop of the left clip which is installed directly ahead of the installed position of the air pressure or vacuum gauge in the instrument cluster.
15. Position the instrument cluster in the housing and install the screws retaining the cluster to the housing. Connect the speedometer and tachometer cables.
16. Connect the multiple connectors of the harness branch for the under-cab wiring assembly which extends from the front center of the floor. Connect the connector to the three relay wires at the center of the dash panel. At the buzzer just to the left of the relay, connect the orange-green stripe wire to the left terminal and connect the orange-blue stripe wire to the right terminal. On tractor units, connect the red wire to the forward terminal of the stop light switch at the air manifold adapter above and to the right of the relay. Connect the red-black stripe wire to the rear terminal of the switch.
17. Connect the battery ground cable(s) and install the battery cover. Check the operation of all switches, lights, gauges and other electrical equipment connected to the dash panel-to-instrument panel wiring harness.

PART 34-11 Left Side Dash Panel to Headlight Junction Wiring Harness

COMPONENT INDEX Applies to Models as Indicated	MODEL APPLICATION Econoline	L-Series	C-Series
REMOVAL AND INSTALLATION	11-01	11-01	11-02

A page number indicates that the item is for the vehicle(s) listed at the head of the column.

REMOVAL AND INSTALLATION

ECONOLINE

Removal

1. Disconnect the battery ground cable.
2. Raise the vehicle and disconnect the brake warning switch shell cap connector at the pressure differential valve mounted on the rear of the underbody crossmember. Work the wire grommet out of the hole in the crossmember, pry the four plastic wiring assembly locators out of the holes in the underbody flanges, and pull the brake warning circuit wires free from the underbody. Two of the locators are in the bottom flange of the lengthwise member, and two are in the top flange of the forward crossmember.
3. Lower the vehicle, raise the hood, and disconnect the connector to the windshield washer pump motor. Disconnect the lead to the horn(s) and the multiple connectors to the left headlight, parking light and side marker light.
4. Disconnect the harness locators from the dash panel, and pull the lower end of the wiring harness up and out of the underhood area.
5. Disconnect the ground wire from the left side panel. Disconnect the harness locators at the top of the dash panel, and disengage the harness from the clips on the dash panel.
6. Working up from underneath the left side of the instrument panel, disconnect the multiple connector. Work the harness grommet out of the hole in the dash panel and guide the harness forward out of the hole.
7. Remove the wiring harness from the underhood area of the vehicle.

Installation

1. Support the wiring harness over the top of the underhood area and feed the end of the harness into the hole in the upper left of the dash panel.
2. Connect the multiple connector under the instrument panel. **To avoid improper connections, be sure that the two blue colored connectors are mated.** Engage the harness grommet in the hole in the dash panel.
3. Route the harness down the dash panel into position. Attach the harness locators to the dash panel and engage the harness in the clips.
4. Install the ground wire to the left side panel. Connect the wiper motor multiple connector.
5. Connect the multiple connectors to the left headlight, parking light and side marker light wires. Connect the lead to the horn(s). Connect the connector to the windshield washer pump motor.
6. Raise the vehicle. Install the harness locators to the top flange of the forward underbody crossmember and the lower flange of the lengthwise member.
7. Route the end of the harness (brake indicator light circuit) rearward through the hole in the crossmember and connect the shell cap connector to the brake indicator switch on the pressure differential valve. Install the grommet in the hole in the crossmember.
8. Lower the vehicle and connect the battery ground cable. Check the operation of all components supplied by the wiring harness.

L-SERIES TRUCKS

This wiring harness connects a junction block at the upper center of the dash panel to a junction block at the front end left side of the hood. The wiring harness is strapped to a support rod that runs from the center of the dash panel to the center of the radiator.

To remove the harness, raise the hood, disconnect the battery ground cable, and open the junction block cover at the dash panel. Remove the retaining nuts and disconnect the harness wires from the junction block terminal posts. The color codes of the wires relative to the terminal posts (Figs. 1, 2 and 3) should be carefully noted for correct installation.

Remove the two harness mounting clips at the dash panel, the four retaining straps along the support rod and the four retaining clips along the radiator left support.

The harness continues from the radiator left support through a shield which is mounted to a bracket on the left side of the front crossmember. Remove the shield from the bracket (two retaining screw and washer assemblies and two nuts). Bend the shield retaining tabs out, and separate the wiring harness from the shield.

Remove the retaining nuts and disconnect the harness wires from the terminal posts on the junction block at the front end left side of the hood. The color codes of the wires relative to the terminal posts should be carefully noted for correct installation.

Remove the four harness retaining clips from the left front of the hood

assembly, pull the harness back through the opening in the hood left brace and remove the assembly from the vehicle.

When replacing the harness, transfer all the retaining clips and straps to the new assembly. Before mounting the wiring shield to the bracket on the front crossmember, assemble the harness to the shield and secure the harness in the shield by bending in the retaining tabs. Be sure to make all junction block connections according to the color code-to-terminal relationship as noted during removal.

C-SERIES TRUCKS

The dash panel-to-headlight junction wiring harness is retained by clips to a transverse structural member of the cab front end, slightly below the level of the headlights. From the left light wiring connectors, the harness is routed up through a grommet in the toe board area of the dash panel just forward of the headlight dimmer switch. It terminates in a two-wire connector to the instrument panel wiring harness a short distance beyond the grommet. Access to the wiring harness can be gained by tilting the cab after disconnecting the connector in the driver's compartment.

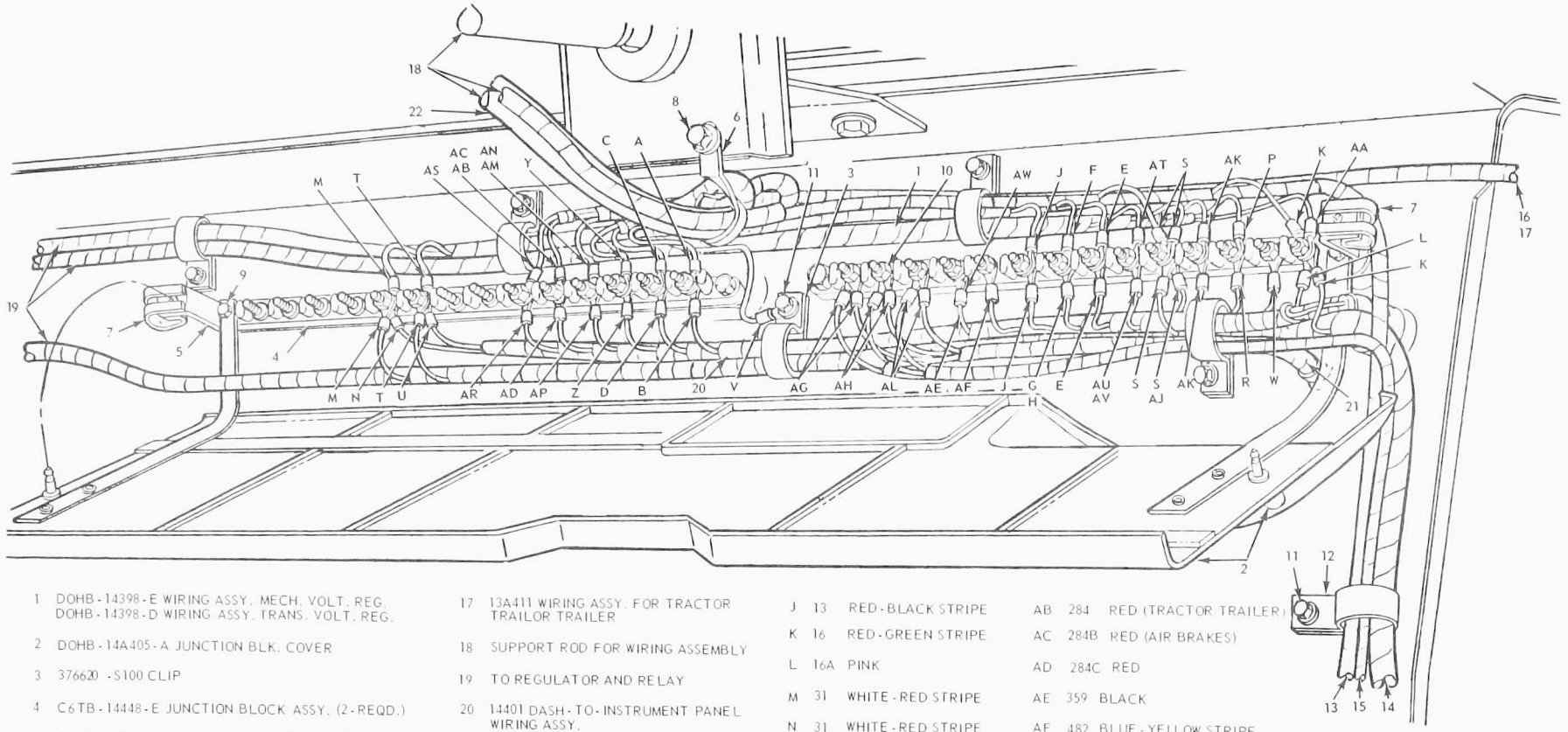

1 DOHB-14398-E WIRING ASSY. MECH. VOLT. REG.
DOHB-14398-D WIRING ASSY. TRANS. VOLT. REG.

2 DOHB-14A405-A JUNCTION BLK. COVER

3 376620 -S100 CLIP

4 C6TB-14448-E JUNCTION BLOCK ASSY. (2-REQD.)

5 DOHB-14A298-B JUNCTION BLK. BRACKET (2-REQD.)

6 352515-S100 CLIP

7 383332-S STUD RECEPTACLE (2-REQD.)

8 EXISTING PART

9 55915-S36X SCREW (4-REQD.)

10 34655-S36 NUT & WASHER ASSY. (22-REQD.)

11 55961-S2 SCREW (6-REQD.)

12 378674-S CLIP (5-REQD.)

13 14305 WIRING ASSY. FOR 6 CYL. ENGINE

14 14305 WIRING ASSY. FOR 8 CYL. ENGINE

15 9A281 WIRING ASSY. FOR 8 CYL.

16 13A612 WIRING ASSY. FOR AIR BRAKES

17 13A411 WIRING ASSY. FOR TRACTOR TRAILOR TRAILER

18 SUPPORT ROD FOR WIRING ASSEMBLY

19 TO REGULATOR AND RELAY

20 14401 DASH-TO-INSTRUMENT PANEL WIRING ASSY.

21 9A342 WIRING ASSY.

22 14290 DASH-TO-HEADLIGHT JUNCTION WIRING ASSEMBLY

A 2 WHITE-BLUE STRIPE

B 2A WHITE-BLUE STRIPE

C 3 GREEN-WHITE STRIPE

D 3A GREEN-WHITE STRIPE

E 11 BLACK-YELLOW STRIPE

F 12 GREEN-BLACK STRIPE

G 12 GREEN-BLACK STRIPE (CITY DELIVERY)

H 12A GREEN-BLACK STRIPE (LINE HAUL)

J 13 RED-BLACK STRIPE

K 16 RED-GREEN STRIPE

L 16A PINK

M 31 WHITE-RED STRIPE

N 31 WHITE-RED STRIPE (CITY DELIVERY)

P 32 RED-BLUE STRIPE

R 32A RED-BLUE STRIPE

S 37 BLACK-YELLOW STRIPE

T 39 RED-WHITE STRIPE

U 39 RED-WHITE STRIPE (CITY DELIVERY)

V 57 BLACK

W 69 RED-GREEN STRIPE

Y 207 BLACK

Z 207B BLACK

AA 262 BROWN

AB 284 RED (TRACTOR TRAILER)

AC 284B RED (AIR BRAKES)

AD 284C RED

AE 359 BLACK

AF 482 BLUE-YELLOW STRIPE

AG 596 BLACK

AH 597 RED

AJ 654 YELLOW

AK 655 RED-ORANGE STRIPE

AL 787 RED-BROWN STRIPE

AM 810 RED-BLACK STRIPE (TRACTOR TRAILER)

AN 810B RED-BLACK STRIPE (AIR BRAKES)

AP 810C RED-BLACK STRIPE

AR 870 BLACK

AS 870 BLACK (TRACTOR TRAILER)

A. 904 GREEN-RED STRIPE

AU 904 GREEN-RED STRIPE (CITY DELIVERY)

AV 904A GREEN-RED STRIPE (LINE HAUL)

AW BLUE INSULATOR

K2511-A

FIG. 1 Dash Panel Junction Blocks L-Series with Gas Engines Except 401, 477 and 534

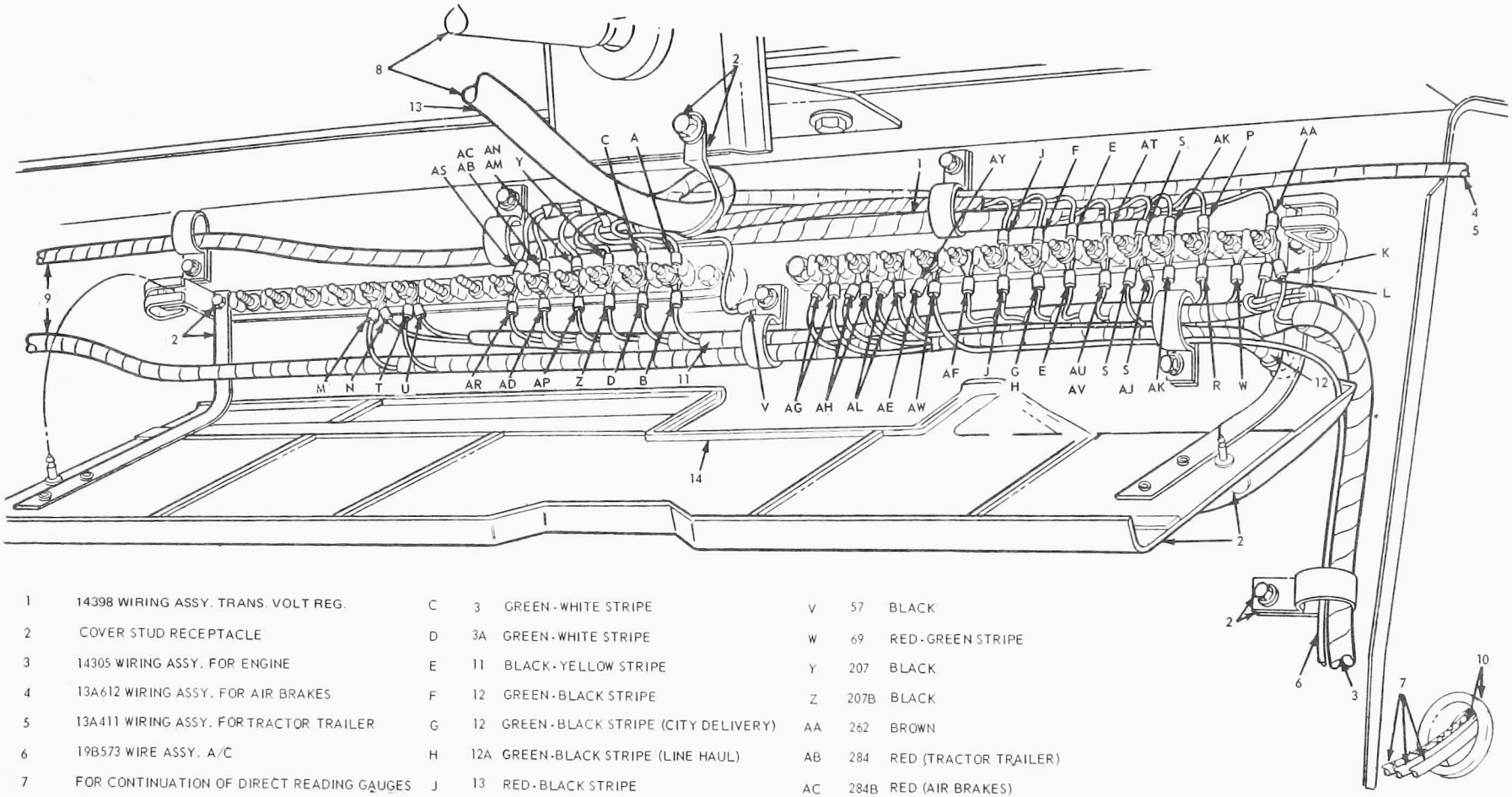

1	14398 WIRING ASSY. TRANS. VOLT REG.	C	3	GREEN-WHITE STRIPE	V	57	BLACK				
2	COVER STUD RECEPTACLE	D	3A	GREEN-WHITE STRIPE	W	69	RED-GREEN STRIPE				
3	14305 WIRING ASSY. FOR ENGINE	E	11	BLACK-YELLOW STRIPE	Y	207	BLACK				
4	13A612 WIRING ASSY. FOR AIR BRAKES	F	12	GREEN-BLACK STRIPE	Z	207B	BLACK				
5	13A411 WIRING ASSY. FOR TRACTOR TRAILER	G	12	GREEN-BLACK STRIPE (CITY DELIVERY)	AA	262	BROWN				
6	19B573 WIRE ASSY. A/C	H	12A	GREEN-BLACK STRIPE (LINE HAUL)	AB	284	RED (TRACTOR TRAILER)				
7	FOR CONTINUATION OF DIRECT READING GAUGES	J	13	RED-BLACK STRIPE	AC	284B	RED (AIR BRAKES)				
8	SUPPORT ROD FOR WIRING ASSEMBLY	K	16	RED-GREEN STRIPE	AD	284C	RED	AN	810B	RED-BLACK STRIPE (AIR BRAKE)	
9	TO REGULATOR AND RELAY	L	16A	PINK	AE	359	BLACK	AP	810C	RED-BLACK STRIPE	
10	INST. PANEL WIRING AND DIRECT GAUGE TUBES	M	31	WHITE-RED STRIPE	AF	482	BLUE-YELLOW STRIPE	AR	870	BLACK	
11	14401 DASH-TO-INST. PANEL WIRING ASSY.	N	31	WHITE-RED STRIPE (CITY DELIVERY)	AG	596	BLACK	AS	870	BLACK (TRACTOR TRAILER)	
12	9A342 WIRING ASSY	P	32	RED-BLUE STRIPE	AH	597	RED	AT	904	GREEN-WHITE STRIPE	
13	14290 DASH-TO-HEADLIGHT JUNCTION WIRING ASSY	R	32A	RED-BLUE STRIPE	AJ	654	YELLOW	AU	904	GREEN-RED STRIPE (CITY DELIVERY)	
14	REMOVE KNOCKOUT	S	37	BLACK-YELLOW STRIPE	AK	655	RED-ORANGE STRIPE	AV	904A	GREEN-RED STRIPE (LINE HAUL)	
A	2 WHITE-BLUE STRIPE	T	39	RED-WHITE STRIPE	AL	787	RED-BROWN STRIPE	AW	B	BLACK	
B	2A WHITE-BLUE STRIPE	U	39	RED-WHITE STRIPE (CITY DELIVERY)	AM	810	RED-BLACK STRIPE (TRACTOR TRAILER)	AY		BLUE INSULATOR	

K2512-B

FIG. 2 Dash Panel Junction Block L-Series with 401, 477 and 534 Gas Engines

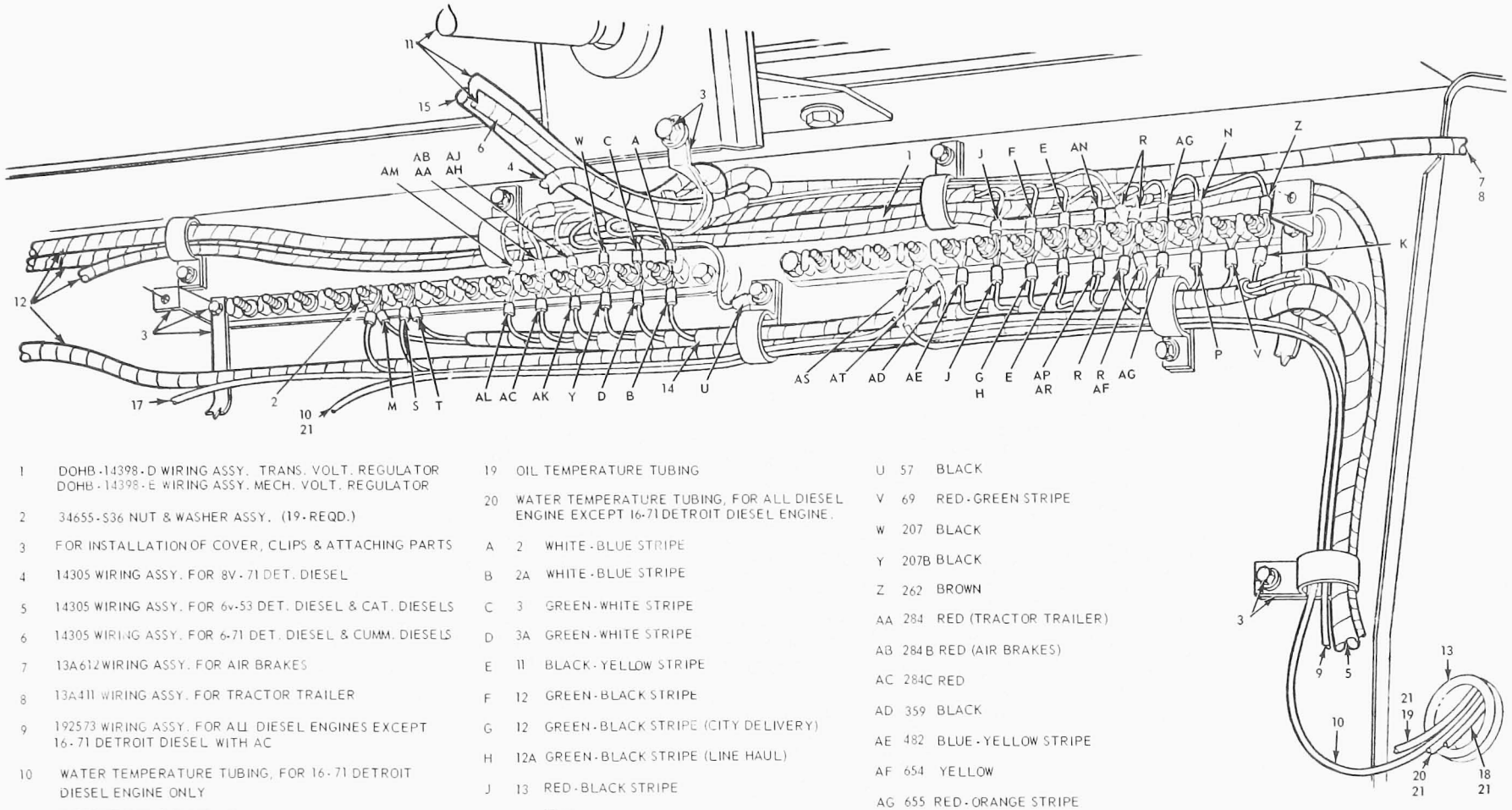

1 DOHB-14398-D WIRING ASSY. TRANS. VOLT. REGULATOR
DOHB-14398-E WIRING ASSY. MECH. VOLT. REGULATOR

2 34655-S36 NUT & WASHER ASSY. (19-REQD.)

3 FOR INSTALLATION OF COVER, CLIPS & ATTACHING PARTS

4 14305 WIRING ASSY. FOR 8V-71 DET. DIESEL

5 14305 WIRING ASSY. FOR 6v-53 DET. DIESEL & CAT. DIESELS

6 14305 WIRING ASSY. FOR 6-71 DET. DIESEL & CUMM. DIESELS

7 13A612 WIRING ASSY. FOR AIR BRAKES

8 13A411 WIRING ASSY. FOR TRACTOR TRAILER

9 192573 WIRING ASSY. FOR ALL DIESEL ENGINES EXCEPT 16-71 DETROIT DIESEL WITH AC

10 WATER TEMPERATURE TUBING, FOR 16-71 DETROIT DIESEL ENGINE ONLY

11 SUPPORT ROD FOR WIRING ASSY.

12 TO REGULATOR AND RELAY

13 INST. PANEL WIRING AND DIRECT GAUGE TUBES

14 14401 DASH-TO-INST. PANEL WIRING ASSY.

15 14290 DASH-TO-HEADLIGHT JUNCTION WIRING ASSY.

16 11A003 WIRING ASSY., FOR ALL DIESEL ENGINES EXCEPT V8 MID-RANGE CAT. DIESEL ENGINES

17 19P573 WIRING ASSY., FOR 16-71 DETROIT DIESEL ONLY

18 OIL PRESSURE TUBING

19 OIL TEMPERATURE TUBING

20 WATER TEMPERATURE TUBING, FOR ALL DIESEL ENGINE EXCEPT 16-71 DETROIT DIESEL ENGINE.

A	2	WHITE-BLUE STRIPE
B	2A	WHITE-BLUE STRIPE
C	3	GREEN-WHITE STRIPE
D	3A	GREEN-WHITE STRIPE
E	11	BLACK-YELLOW STRIPE
F	12	GREEN-BLACK STRIPE
G	12	GREEN-BLACK STRIPE (CITY DELIVERY)
H	12A	GREEN-BLACK STRIPE (LINE HAUL)
J	13	RED-BLACK STRIPE
K	16A	PINK
L	31	WHITE-RED STRIPE (CAT. DIESEL)
M	31	WHITE-RED STRIPE (CITY DELIVERY)
N	32	RED-BLUE STRIPE
P	32A	RED-BLUE STRIPE
R	37	BLACK-YELLOW STRIPE
S	39	RED-WHITE STRIPE (CAT. DIESEL)
T	39	RED-WHITE STRIPE (CITY DELIVERY)
U	57	BLACK
V	69	RED-GREEN STRIPE
W	207	BLACK
Y	207B	BLACK
Z	262	BROWN
AA	284	RED (TRACTOR TRAILER)
AB	284B	RED (AIR BRAKES)
AC	284C	RED
AD	359	BLACK
AE	482	BLUE-YELLOW STRIPE
AF	654	YELLOW
AG	655	RED-ORANGE STRIPE
AH	810	RED-BLACK STRIPE (TRACTOR TRAILER)
AJ	810B	RED-BLACK STRIPE (AIR BRAKES)
AK	810C	RED-BLACK STRIPE
AL	870	BLACK
AM	870	BLACK (TRACTOR TRAILER)
AN	904	GREEN-RED STRIPE
AP	904	GREEN-RED STRIPE (CITY DELIVERY)
AR	904A	GREEN-RED STRIPE (LINE HAUL)
AS	B	BLACK
AT		BLUE INSULATOR

K2513-A

FIG. 3 Dash Panel Junction Blocks L-Series With Diesel Engine

PART 34-12 Right Side Dash Panel to Headlight Junction Wiring Harness

REMOVAL AND INSTALLATION

ECONOLINE

1. At the upper right side of the dash panel disconnect the two multiple connectors and the one bullet connector if so equipped.
2. Disconnect the multiple connectors to the right headlight, parking light and side marker light.
3. Disengage the harness from the two straps on the right side panel and from three clips on the dash panel. Remove the harness from the vehicle.
4. Install the new harness (end with 3 connectors down, end with 1 connector up) to the side panel and dash panel and secure it in place with the four retaining clips.
5. Connect the multiple connectors to the right headlight, parking light and side marker light.
6. Connect the opposite end of the harness to the two multiple connectors (and one bullet connector if so equipped) at the upper right side of the dash panel.

PART 34-31 Fuses and Circuit Breakers

COMPONENT INDEX Applies To Models as Indicated	MODEL APPLICATION						
	All Models	Bronco	Econoline	F- and B-100-750	C-Series	L-Series	W-Series
GENERAL INFORMATION – FUSE PANELS		31-01	31-02	31-03	31-03	31-04	31-05
SPECIFICATIONS		31-07	31-07	31-08	31-09	31-09	31-10

A page number indicates that the item is for the vehicle(s) listed at the head of the column.

GENERAL INFORMATION

FUSE PANELS

Each vehicle has a fuse panel which contains most of the fuses used in the electrical system. The fuse panels are located in various positions depending upon the vehicle as shown in Figs. 1 through 8 which show the fuse panels for each vehicle line.

The circuit protection charts in Specifications of this Part give the location and values of **all** the circuits containing fuses or circuit breakers for the various vehicle lines.

ELECTRICAL CONSOLE—W-SERIES

An electrical console (Fig. 6) is located to the right of the driver's seat. This console consists of a series of in-line toggle switches and a circuit protection panel, both of which are mounted on a hinged cover. Two types of circuit protection panels are available: one type contains both fuses and circuit breakers (Fig. 7); the other contains circuit breakers only (Fig. 8).

FUSE PANEL ATTACHED TO LEFT END OF GLOVE BOX

1. (20 AMP) HAZARD FLASHER SYSTEM
2. (15 AMP) DOME LIGHT AND CIGAR LIGHTER
3. (2 AMP) INSTRUMENT PANEL AND CLUSTER LIGHTS
4. (14 AMP) TURN SIGNALS, RADIO, BACK-UP LIGHTS, WINDSHIELD WIPER/WASHER
5. (20 AMP) HEATER

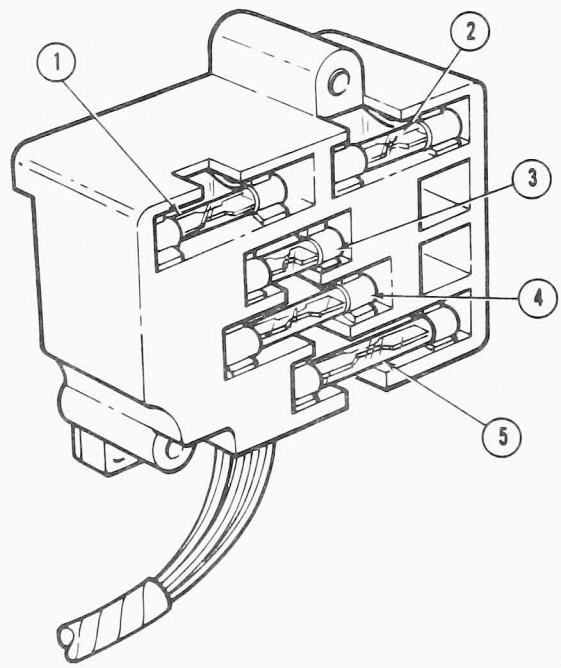

FIG. 1 Fuse Panel—Bronco

K1907-D

MOUNTED ON LEFT SIDE OF ENGINE HOUSING ABOVE AND TO THE RIGHT OF ACCELERATOR PEDAL

1. (20 AMP) HEATER AND DEFROSTER
2. (14 AMP) TURN SIGNALS FLASHER, BACK-UP LIGHTS AND WINDSHIELD WASHER
3. (3 AMP) INSTRUMENT PANEL AND CLUSTER LIGHTS-CIGAR LIGHTER, HEATER CONTROL, WINDSHIELD WIPER SWITCH, A/C AND AUX. FAN CONTROL ILLUMINATION
4. (15 AMP) CIGAR LIGHTER, DOME LIGHT, CARGO LIGHT, AND COURTESY LIGHTS
5. (20 AMP) HAZARD FLASHER SYSTEM AND STOP LIGHTS

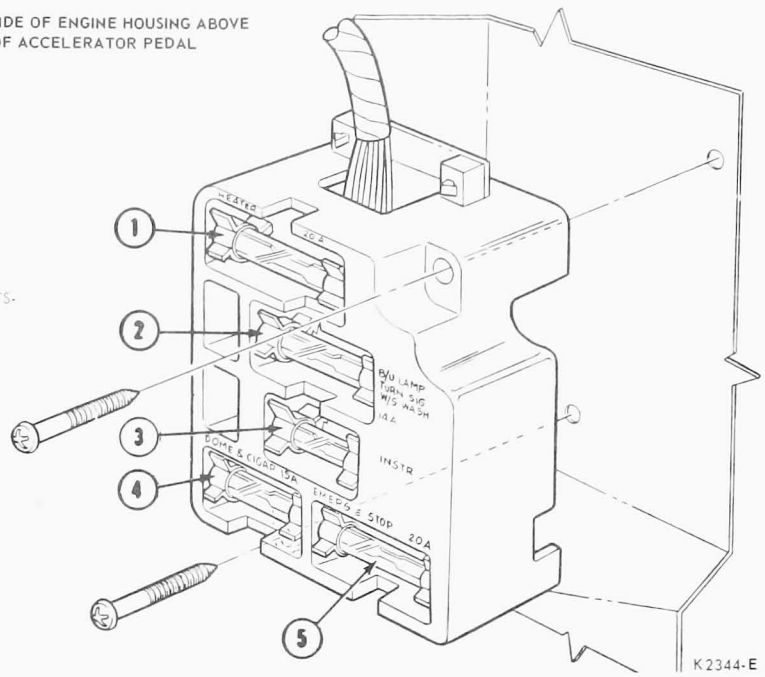

FIG. 2 Fuse Panel—Econoline

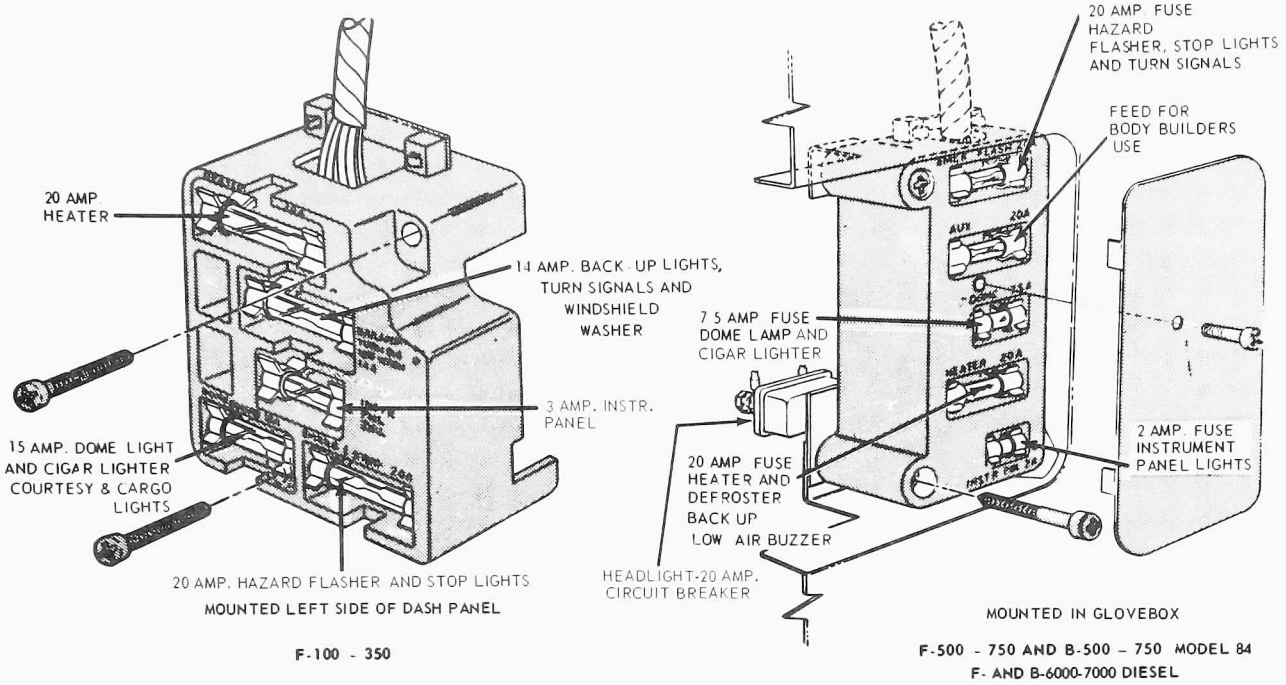

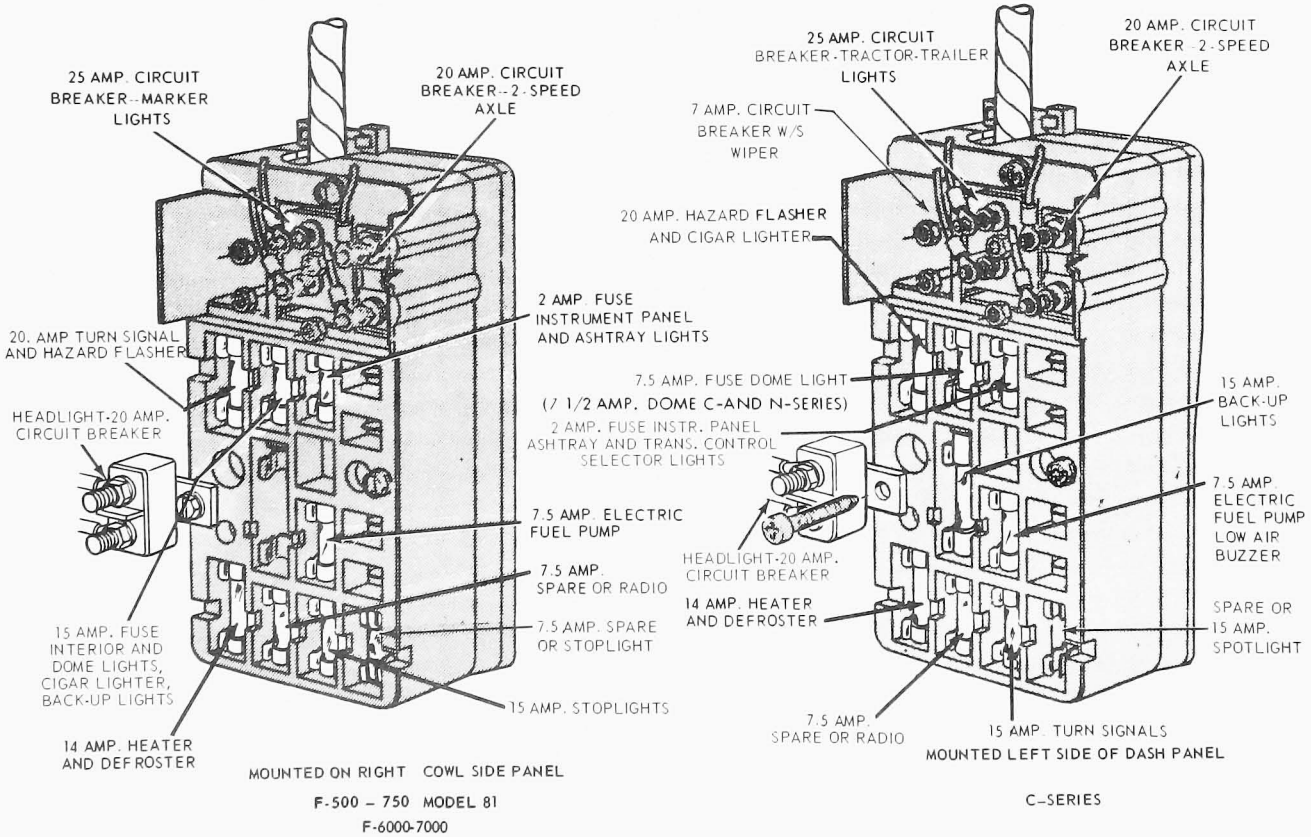

K2132-G

FIG. 3 Fuse Panel—Truck and Bus

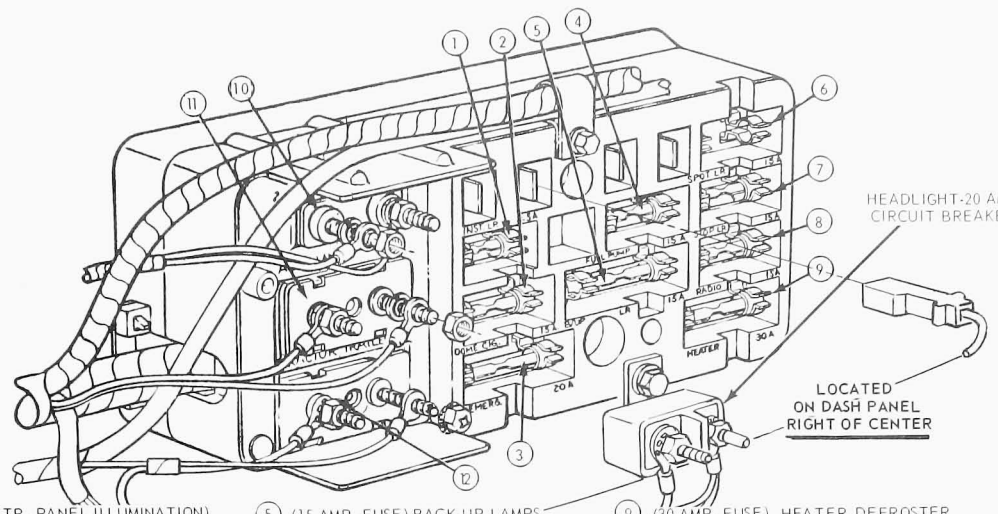

1. (2.5 AMP. FUSE) (INSTR. PANEL ILLUMINATION) HEATER SWITCH, CIGAR LIGHTER, AIR GAGE, TRANS. SELECTOR INDICATOR
2. (15 AMP. FUSE) (INTERIOR LAMPS) DOOR COURTESY, DOME & CIGAR LIGHTER FEED,
3. (20 AMP. FUSE) EMERGENCY WARNING & TURN SIGNALS
4. (15 AMP. FUSE) FUEL PUMP, LOW AIR BUZZER, DUAL BRAKE WARNING
5. (15 AMP. FUSE) BACK-UP LAMPS
6. (SPARE) OR (7.5 AMP. FUSE) FOR SPOT LAMP
7. (15 AMP. FUSE) STOP LAMPS
8. (15 AMP. FUSE) RADIO
9. (30 AMP. FUSE) HEATER-DEFROSTER
10. (20 AMP. C.B.) 2-SPEED AXLE (R.P.O.)
11. (25 AMP. C.B.) MARKER LAMPS
12. AIR CONDITIONER

K2502-B

FIG. 4 Fuse Panel—L-Series Truck, City Delivery Models

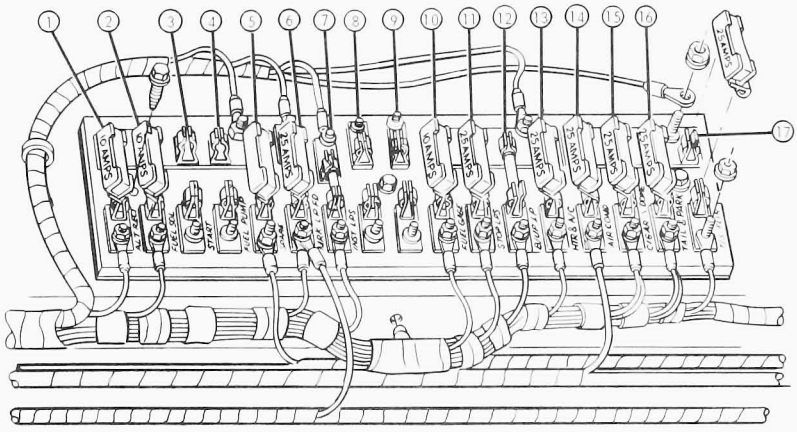

1. 10 AMP. CIRCUIT BREAKER – ALTERNATOR RECTIFIER
2. 10 AMP. CIRCUIT BREAKER – FUEL SOLENOID SHUT-OFF VALVE
3. 10 AMP. CIRCUIT BREAKER – DUAL BRAKE WARNING
4. 10 AMP. CIRCUIT BREAKER – ELECTRIC FUEL PUMP
5. 25 AMP. CIRCUIT BREAKER – T-146 2-SPEED AXLE ELECTRIC SHIFT OR 10 AMP. CIRCUIT BREAKER – T-146 2 OR 3-SPEED AXLE AIR SHIFT
6. 25 AMP. CIRCUIT BREAKER – MARKER LIGHTS
7. 7.5 AMP FUSE – (INSTRUMENT PANEL ILLUMINATION) FUEL GAUGE, AMMETER, TACHOMETER, WATER TEMP., CIGAR LIGHTER, HEATER SWITCH, OIL PRESSURE AND TRANSMISSION SELECTOR INDICATOR
8. SPARE
9. SPARE
10. 10 AMP. CIRCUIT BREAKER – FUEL GAUGE INDICATOR
11. 25 AMP. CIRCUIT BREAKER – STOP LIGHTS
12. 7.5 AMP. FUSE – BACK-UP LIGHTS AND RADIO
13. 25 AMP. CIRCUIT BREAKER – HEATER AND DEFROSTER
14. 25 AMP. CIRCUIT BREAKER – AIR CONDITIONER
15. 25 AMP. CIRCUIT BREAKER – CIGAR LIGHTER AND DOME LIGHT
16. 25 AMP. CIRCUIT BREAKER – HEADLIGHTS, TAIL AND PARKING LIGHTS
17. 25 AMP. CIRCUIT BREAKER – HAZARD WARNING SYSTEM AND TURN SIGNALS

K2503-B

FIG. 5 Fuse Panel—L-Series Truck, Line Haul models

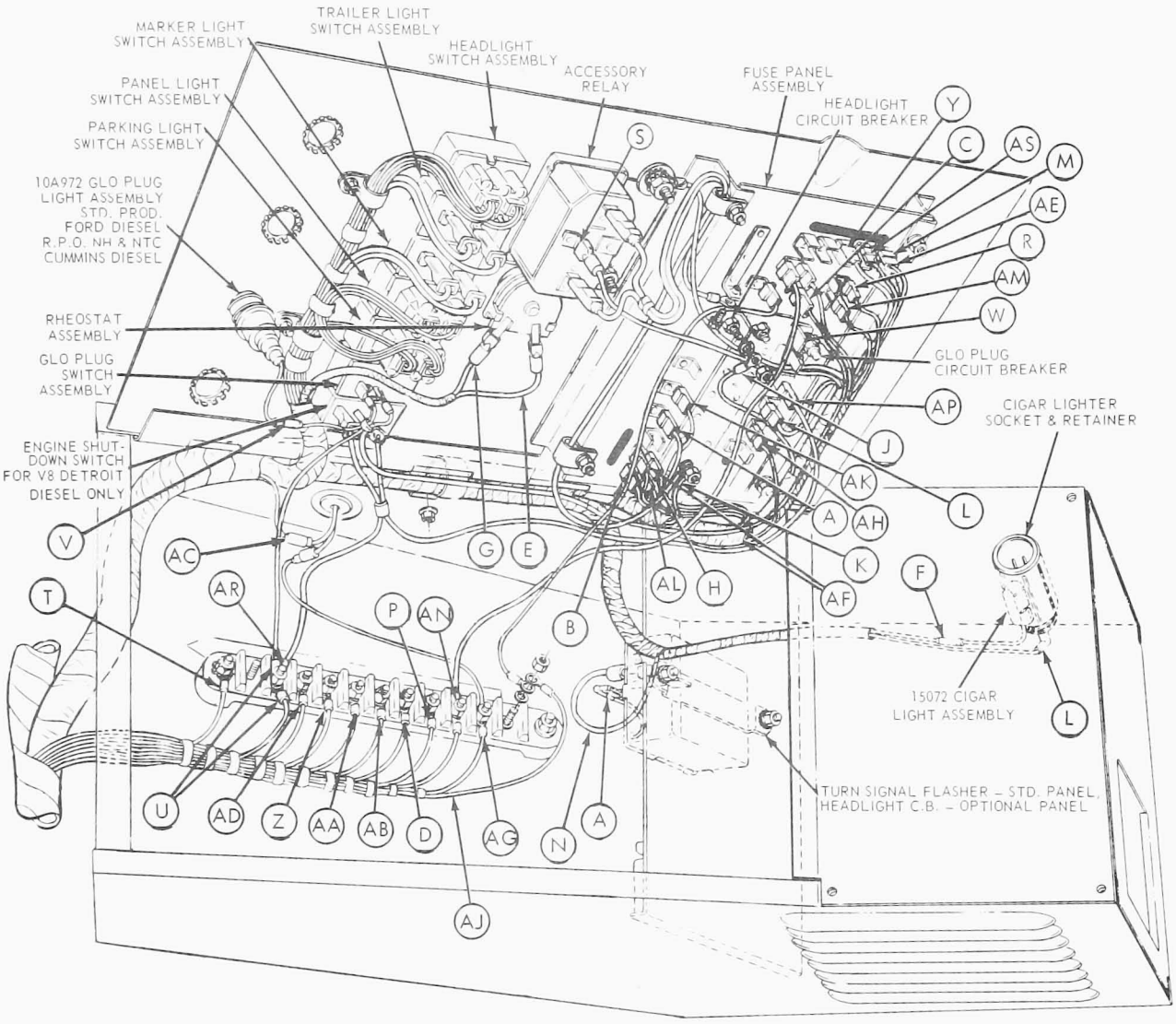

A	8 ORANGE-YELLOW STRIPE	K	38 BLACK	W	129 GREEN	AG	347 BLACK
B	11A BLACK-YELLOW STRIPE	L	40 BLUE-WHITE STRIPE	Y	140 BLACK-RED STRIPE	AH	460 YELLOW
C	16 RED-GREEN STRIPE	M	43 ORANGE-BLUE STRIPE	Z	141 BLACK	AJ	509 YELLOW
D	17 WHITE	N	44 BLUE	AA	142 GREEN	AK	BLACK-WHITE STRIPE
E	19 BLUE-RED STRIPE	P	45 YELLOW-RED STRIPE	AB	143 RED	AL	666 RED
F	19A BLUE-RED STRIPE	R	69 RED-GREEN STRIPE	AC	399 BROWN	AM	904 GREEN-RED STRIPE
G	19B BLUE-RED STRIPE	S	71 BLACK	AD	255 BLUE	AN	960 RED
H	19C BLUE-RED STRIPE	T	57 BLACK	AE	284 RED	AP	973 RED
J	25 BLACK-ORANGE STRIPE	U	89 ORANGE	AF	285B BROWN	AR	974 ORANGE
		V	89A ORANGE			AS	976 BLACK-GREEN STRIPE

K1893-E

FIG. 6 Electrical Console—W-Series Truck

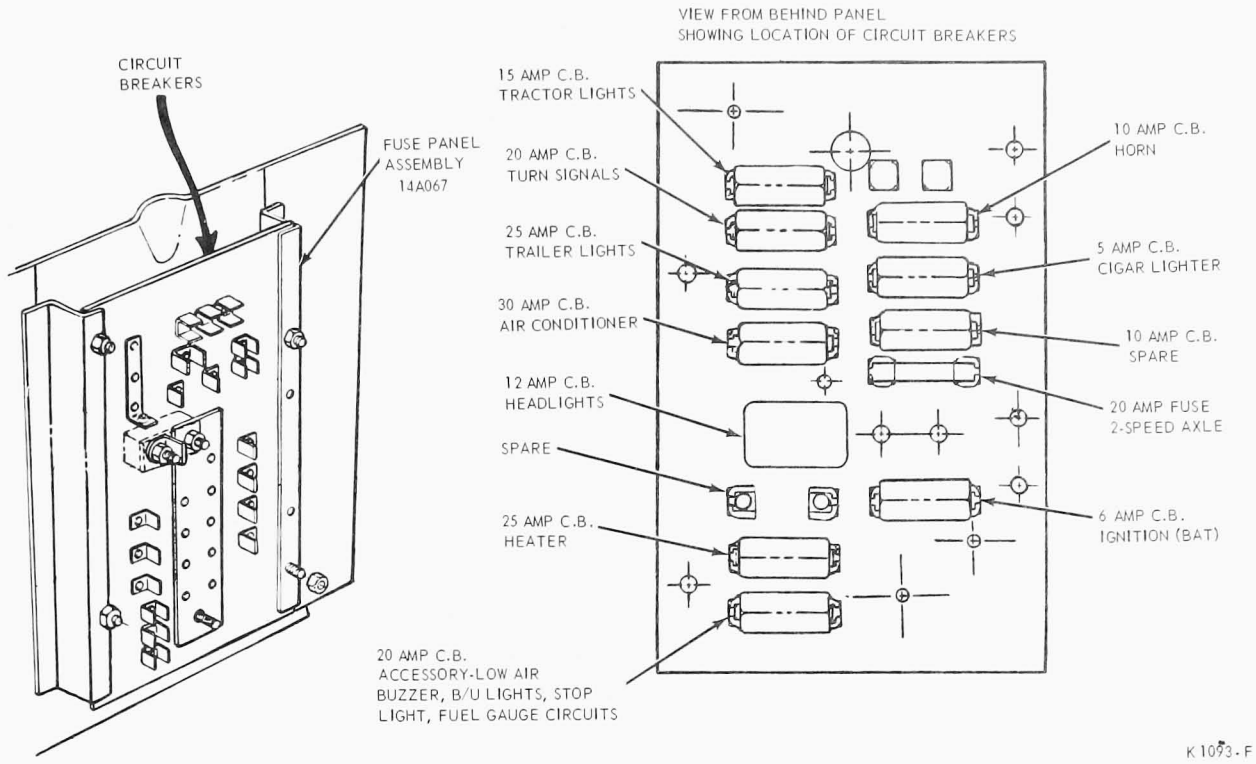

FIG. 7 Fuse and Circuit Breaker Panel—W-Series Truck

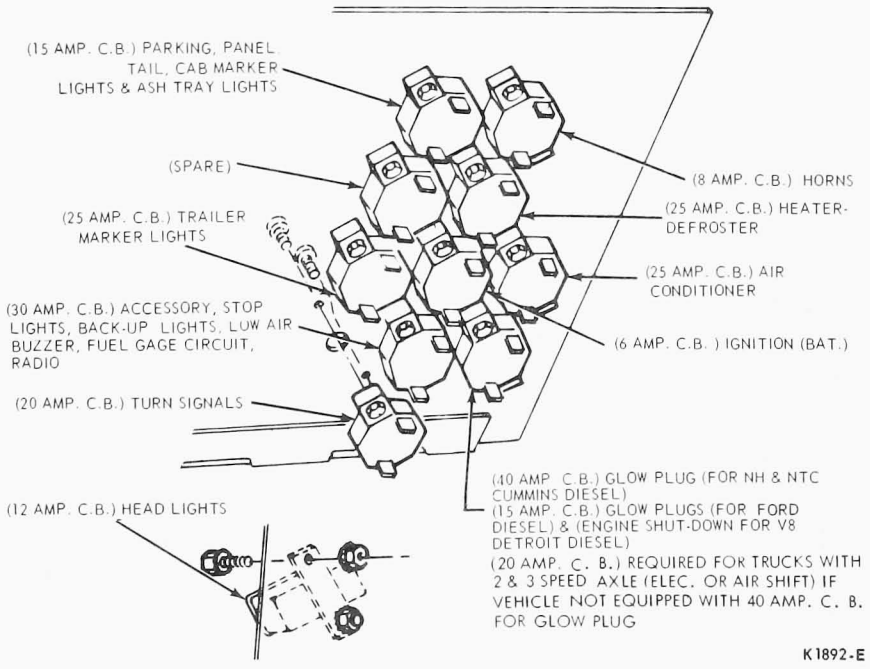

FIG. 8 Circuit Breaker Panel—W-Series Truck

SPECIFICATIONS

CIRCUIT PROTECTION – BRONCO

Circuit	Location	Protective Device ①	Circuit	Location	Protective Device ①
Back-Up Lights, W/S Washer, Turn Signal and Radio	Fuse Panel	SFE 14	Heater	Fuse Panel	SFE 20
Dome, Courtesy, Map or Cargo Lights and Cigar Lighter	Fuse Panel	AGW 15	Horns, Park, License, Marker and Stop Lights ②	Headlight Switch	15 Amp. C.B.
Emergency Flasher System	Fuse Panel	SFE 20	Instrument Panel Light	Fuse Panel	AGA 2
Headlights	Headlight Switch	12 Amp. C.B.			

① Fuse or Circuit Breaker (C.B.) in Amperes.

② Under NO circumstances use more than an 8.5 ampere load across the ignition switch terminals for the rear light circuit on ANY truck or bus which uses the hydraulic stoplight switch.

CK2519-A

CIRCUIT PROTECTION – ECONOLINE

Circuit	Location	Protective Device ①	Circuit	Location	Protective Device ①
Air Conditioner	In Feed Line	8 AG or AGX	Headlights	Headlight Switch	12 C.B.
Auxiliary Heater	In Feed Line	SFE 14	Heater	Fuse Panel	AGC or SFE 20
Back-Up Lights, Turn Signal, and Windshield Washer	Fuse Panel	SFE 14	Instrument Panel Lights	Fuse Panel	AGA 2
Dome, Courtesy, Map, Cargo Lights and Cigar Lighter	Fuse Panel	AGW 15	Radio	In Feed Line	AGA 5
Emergency Flasher System and Stop Lights ②	Fuse Panel	AGX 20	Spotlight	In Feed Line	SFE 7.5
Fog Lights	In Feed Line	AGC 10	Tail, License, Parking, Marker Lights and Horns	Headlight Switch	15 C.B.
			Windshield Wiper System	Wiper Switch	C.B.

① Fuse or Circuit Breaker (C.B.) in Amperes.

② Under NO circumstance use more than an 8.5 ampere load across the ignition switch terminals for the rear light circuit on ANY truck or bus which uses the hydraulic stoplight switch.

CK2520-A

CIRCUIT PROTECTION–PARCEL DELIVERY

Circuit	Location	Protective Device ①	Circuit	Location	Protective Device ①
Dome Light	In Line (Hang On)	SFE 14	Horn, Tail, Park, License Marker & Stop Lights	Headlight Switch	12 Amp. C.B.
Emergency Flasher System	In Line (Hang On)	SFE 14	Instrument Panel Light	In Line (Hang On)	AGA 1
Fuel System (240 Dorset Diesel)	Attached to Instrument Panel Support	6 Amp. C.B.	Turn Signal & Back-up Lights	In Line (Hang On)	AGC 10
			Windshield Wiper System	Integral with Wiper Switch	C.B.
Headlights	Headlight Switch	12 Amp. C.B.			
Heater and Defroster	In Line (Hang On)	SFE 14	W/S Washer	In Line (Hang On)	AGC 10

① Fuse or Circuit Breaker (C.B.) in Amperes.

② Under NO circumstances use more than an 8.5 ampere load across the ignition switch terminals for the rear light circuit on ANY truck or bus which uses the hydraulic stoplight switch.

CK2521-A

CIRCUIT PROTECTION–F-100, F-350

Circuit	Location	Protective Device ①
Air Conditioner	Back of Inst. Panel	14 Amp. C.B.
Back-Up Lights, W/S Washer & Turn Signals	Fuse Panel	SFE 14
Courtesy Lights Cargo, Cigar Lighter, Dome Map	Fuse Panel	AGW 15
Headlights	Headlight Switch	12 Amp. C.B.
Heater	Fuse Panel	AGC 20 or SFE 20
Instrument Panel Lights	Fuse Panel	3 Amps.
Marker Lights - F-100 thru F-350 Camper Special Option –	Right Side Cowl Panel	15 C.B.
Marker Lights - F-350 Stake Platform or Dual Rear Wheels	Right Side Cowl Panel	25 C.B.
Overdrive Transmission	On Overdrive Relay	AGC 15
Stop and Emergency Flasher Lights ②	Fuse Panel	AGX 20
Tail, Park, License, Marker Lights and Horn	Headlight Switch	15 Amp. C.B.
Windshield Wiper	Integral with Wiper Switch	C.B.

① Fuse or Circuit Breaker (C.B.) in Amperes.

② Under NO circumstances use more than an 8.5 ampere load across the ignition switch terminals for the rear light circuit on ANY truck or bus which uses the hydraulic stop light switch.

CIRCUIT PROTECTION B-, F-500-750, F-6000, 7000D

Circuit	Location	Protective Device ①
Auxiliary Feed Circuit	Fuse Panel	SFE 20 or AGC 20
Cigar Lighter	Fuse Panel	SFE 7.5
Courtesy Lights - Model 84 Cigar Lighter, Dome Lights	Fuse Panel	SFE 7.5
Courtesy Lights Cigar Lighter, Dome Lights	Fuse Panel	AGW 15
Electric Fuel Pump F-700-750 Model 84	Cartridge in line	SFE 7.5
F-700-750 Model 81	Fuse Panel	SFE 7.5
Electric Wiper	Integral with Wiper Switch	C.B.
Emergency Flasher (Diesel) F-6000-7000-D	Fuse Panel	SFE 20 or AGC 20
Headlights	Headlight Switch	12 Amp. C.B.
Heater and Defroster, Back-up Lights- Model 81	Fuse Panel	SFE 20 or AGC 20
Heater and Defroster, Back-Up Lights- Model 84, Low Air Buzzer	Fuse Panel	SFE 20 or AGC 20
Instrument Panel Lights	Fuse Panel	IGA or AGA 2
Marker Lights Model 84	R.H. Cowl Panel	15 Amp C.B.
Model 81	Fuse Panel	25 Amp. C.B.
Radio	Cartridge in line	SFE 7.5
Stop Light - Model 81②	Fuse Panel	AGW 15
Stop Light, Turn Signals and Emergency Flasher-Model 84	Fuse Panel	SFE 20 or AGC 20
Tail, Parking, License, Marker Lights and Horn	Fuse Panel	25 Amp. C.B.
Turn Signals and Emergency Flasher - Model 81	Fuse Panel	SFE 20 or AGC 20
Model 81	Fuse Panel	20 Amp. C.B.
Model 84	R.H. Cowl Panel	20 Amp. C.B.

① Fuse or Circuit Breaker (C.B.) in Amperes.

② Under NO circumstances use more than an 8.5 ampere load across the ignition switch terminals for the rear light circuit on ANY truck or bus which uses the hydraulic stoplight switch.

CK2523-B

CIRCUIT PROTECTION—TRUCKS L-SERIES

Circuit	Location	Protective Device ①
Back-Up Lights & Radio	Fuse Panel	SFE 7.5
Cigar Lighter	Fuse Panel	25 C.B.
Diesel Starting Aid	Left Side Cowl Panel	40 Amp. C.B.
Electrical Fuel Pump	Fuse Panel	SFE 10
Turn Signal and Emergency Flashers	Fuse Panel	25 C.B.
Headlight	Headlight Switch	20 Amp. C.B.
Heater - Defroster	Fuse Panel	25 C.B.
Instrument Panel Lights	Fuse Panel	4
Interior, Dome Light	Fuse Panel	25 C.B.
Marker Lights	Fuse Panel	25 C.B.
Stop Lights ②	Fuse Panel	25 C.B.
Tail, Park, License and Horns	Fuse Panel	25 Amp. C.B.
2-Speed Axle (Electric Shift)	Fuse Panel	20 Amp. C.B.
Windshield Wiper	Integral with Wiper Switch	C.B.

① Fuse or Circuit Breaker (C. B.) in Amperes.

② Under NO circumstances use more than an 8.5 ampere load across the ignition switch terminals for the rear light circuit on ANY truck or bus which uses the hydraulic stoplight switch.

CK2524-B

CIRCUIT PROTECTION—TRUCKS—C- AND CT-SERIES

Circuit	Location	Protective Device ①
Back-Up Lights	Fuse Panel	AGC or SFE 20
Emergency Indicator & Turn Signal Lights	Fuse Panel	AGC or SFE 20
Diesel Starting Aid	Left Side Cowl Panel	40 Amp. C.B.
Dome and Interior Lights, Cigar Lighter	Fuse Panel	SFE 7.5
Electrical Fuel Pump and Low Air Buzzer	Fuse Panel	SFE 7.5
Headlights	Headlight Switch	12 Amp. C.B.
Heater (Auxiliary)	Fuse Panel	AGW 15
Heater - Defroster	Fuse Panel	SFE 14
Instrument Panel Lights	Fuse Panel	AGA 2
Load Circuit	Dash Panel Right of Centerline	70 Amp. C.B. (Re-set Type)
Marker Lights	Fuse Panel	25 Amp. C.B.
Radio (Factory Install)	Fuse Panel	SFE 7.5
Stop Light ②	Fuse Panel	AGW 15
Tail, Park, License, Lights and Horn	Fuse Panel	25 Amp. C.B.
2-Speed Axle (Elect. Shift)	Fuse Panel	20 Amp. C.B.
2 & 3 Speed Axle (Air Shift)	Fuse Panel	6 Amp. C.B.

① Fuse or Circuit Breaker (C.B.) in Amperes.

② Under NO circumstances use more than an 8.5 ampere load across the ignition switch terminals for the rear light circuit on ANY truck or bus which uses the hydraulic stoplight switch.

CK2525-B

CIRCUIT PROTECTION—TRUCKS—W-SERIES

Circuit	Location	Protective Device ①
Accy. Circuits (Low Air Buzzer Back-Up & Stop Lights & Fuel Gauge Circuits)	Fuse Panel	SFE 20 or AGC 20
Air Conditioner	Fuse Panel	AGW 30
Cigar Lighter, Dome, Instrument Lights	Fuse Panel	AGC 15
Diesel Starting Aid W/Cummins Engine	Fuse Panel	40 Amp. C.B.
W/Caterpillar Engine	Fuse Panel	15 Amp. C.B.
Turn Signal and Emergency Flasher System	Fuse Panel	SFE 20 or AGC 20
Fuel Valve	Fuse Panel	SFE 10
Headlights	Fuse Panel	12 Amp. C.B.
Heater - Defroster	Fuse Panel	AGC 25
Horn	Fuse Panel	AGC 10
Ignition & Differential Lockout Indicating Lights, 2 & 3 Speed Axle	Fuse Panel	SFE 6
Tractor Lights	Fuse Panel	SFE 14
Trailer Lights (Marker)	Fuse Panel	AGC 25

① Fuse or Circuit Breaker (C.B.) in Amperes.

② Under NO circumstances use more than an 8.5 ampere load across the ignition switch terminals for the rear light circuit on ANY truck or bus which uses the hydraulic stoplight switch.

CK2527-A

CIRCUIT PROTECTION—TRUCKS—W-SERIES—C. B. PANEL

Circuit	Location	Protective Device ①
Air Conditioner	C.B. Panel	25 Amp. C.B.
Back-up, Stoplight, Low Air Buzzer, Fuel Gauge, Radio	C.B. Panel	30 Amp. C.B.
Diesel Starting Aid(s) W/Cummins Engine	C.B. Panel	40 Amp. C.B.
W/Caterpillar Engine & Detroit Diesel (Engine Shut Down)	C.B. Panel	15 Amp. C.B.
Headlights	C.B. Panel	12 Amp. C.B.
Heater	C.B. Panel	25 Amp. C.B.
Horn	C.B.Panel	8 Amp. C.B.
Ignitions 2 & 3 Speed Axle	C.B. Panel	6 Amp. C.B.
Inst., Tail, Park, Dome, Cab Marker	C.B. Panel	15 Amp. C.B.
Trailer Lights ②	C.B. Panel	25 Amp. C.B.
Turn Signal	C.B. Panel	20 Amp. C.B.

① Fuse or Circuit Breaker (C.B.) in Amperes.

② Under NO circumstances use more than an 8.5 ampere load across the ignition switch terminals for the rear light circuit on ANY truck or bus which uses the hydraulic stoplight switch.

CK2526-A

Auxiliary Equipment

GROUP 35

PART 35-02	PAGE	PART 35-60	PAGE
Radio	35-02-01	Windshield Wipers—Electric	35-60-01
PART 35-11		PART 35-63	
Antennas	35-11-01	Windshield Wipers—Air	35-63-01
PART 35-31		PART 35-70	
Speakers	35-31-01	Windshield Washers	35-70-01
PART 35-40		PART 35-80	
Ash Receptacles and Cigar Lighters	35-40-01	Horns	35-80-01
PART 35-50			
Mirrors—Inside and Outside	35-50-01		

PART 35-02 Radio

COMPONENT INDEX Applies to Models as Indicated	All Models	F-Series	C-Series	W-Series	L-Series	Bronco	Econoline
ADJUSTMENTS							
Push Buttons	02-03						
DESCRIPTION AND OPERATION							
Chassis Connectors	02-02						
Radio	02-01						
REMOVAL AND INSTALLATION							
Radio		02-04	02-06	02-09	02-05	02-09	02-06
Suppression Equipment	02-09						

A page number indicates that the item is for the vehicle(s) listed at the head of the column.
N/A indicates that the item is not applicable to the vehicle(s) listed.

DESCRIPTION AND OPERATION

RADIO

The radio is optional and is available on all models to receiveAM radio programs. An AM-FM radio is also available on F-100 through F-350 model trucks. It is equipped with a combination ON—OFF switch and volume control, a tone control, and a manual tuning control. All models except the Bronco, C-and W-Series have the five station selecting push buttons. The push buttons, which are located below the radio dial, can be preset to any stations desired.

CHASSIS CONNECTORS

F-100 THROUGH F-350

The antenna lead-in receptacle is located on the back of the radio at the right lower corner (Fig. 1). The antenna trimmer is located just above the antenna receptacle. The power and speaker leads are located on the back side of the radio at the left corner.

A permanent magnet speaker is mounted to the instrument panel above the radio (Fig. 1). It is connected to the radio by two wires and a plug connector.

Do not operate the radio unless the speaker is connected to the radio. To do so may damage the power transistor.

F-AND B-500 THROUGH 750

The antenna connector receptacle is located on the bottom of the radio at the right rear corner. The antenna trimmer is located in a hole on the front of the radio below the tuning control (Fig. 2). The power A lead and speaker leads are located on the left side of the radio.

A permanent magnet speaker is mounted to the instrument panel above the radio (Fig. 2). It is connected to the radio by two wires and a plug connector.

Do not operate the radio unless the speaker is connected to the radio. To do so may damage the power transistor.

ALL MODELS EXCEPT F-SERIES

The antenna connector and the antenna trimmer are located on the right side of the radio. The A lead is attached to the left side of the unit.

A permanent magnet speaker is used with all radio applications. The speaker mounts in the instrument panel, except on the L-and W-Series. On L-and W-Series the speaker is mounted on the roof panel (Figs. 3 and 4) and are connected to the receiver by a plug connector.

Do not operate the radio without the speaker connected, as it may damage the power transistor.

ANTENNA TRIMMING

Each radio assembly has an antenna trimmer located in the body of the assembly. The purpose of the trimmer is to adjust the antenna circuit for variations of length, so that many types of antennas may be matched perfectly to the requirements of each radio assembly.

The antenna trimmer should be readjusted when a new antenna or lead-in cable is installed. To trim the antenna, proceed as follows:

1. Inspect the antenna lead-in plug and socket to be sure that they are clean. Clean them if required.
2. Extend the antenna to its maximum length and position the vehicle in an open area away from steel buildings.
3. Turn the radio on.
4. Tune the radio to a weak station around 1600 KC (16 on the dial). Adjust the volume control so that the station is barely audible.
5. Adjust the antenna trimmer to obtain maximum volume from the station.

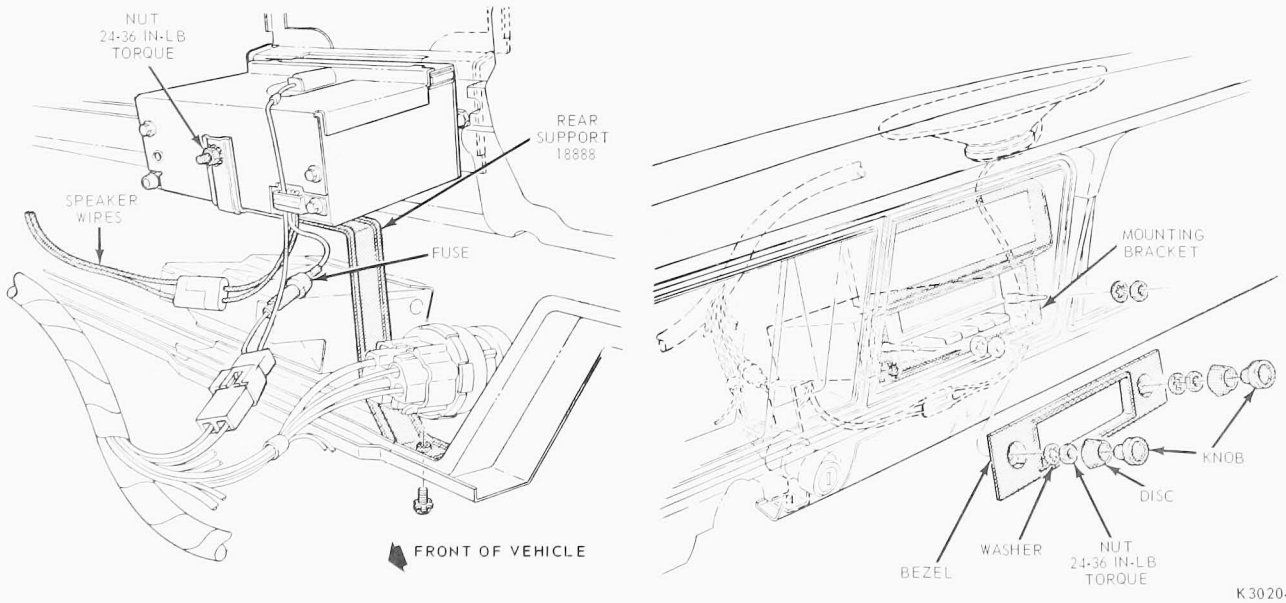

FIG. 1 Radio Installation—F-100 Through F-350

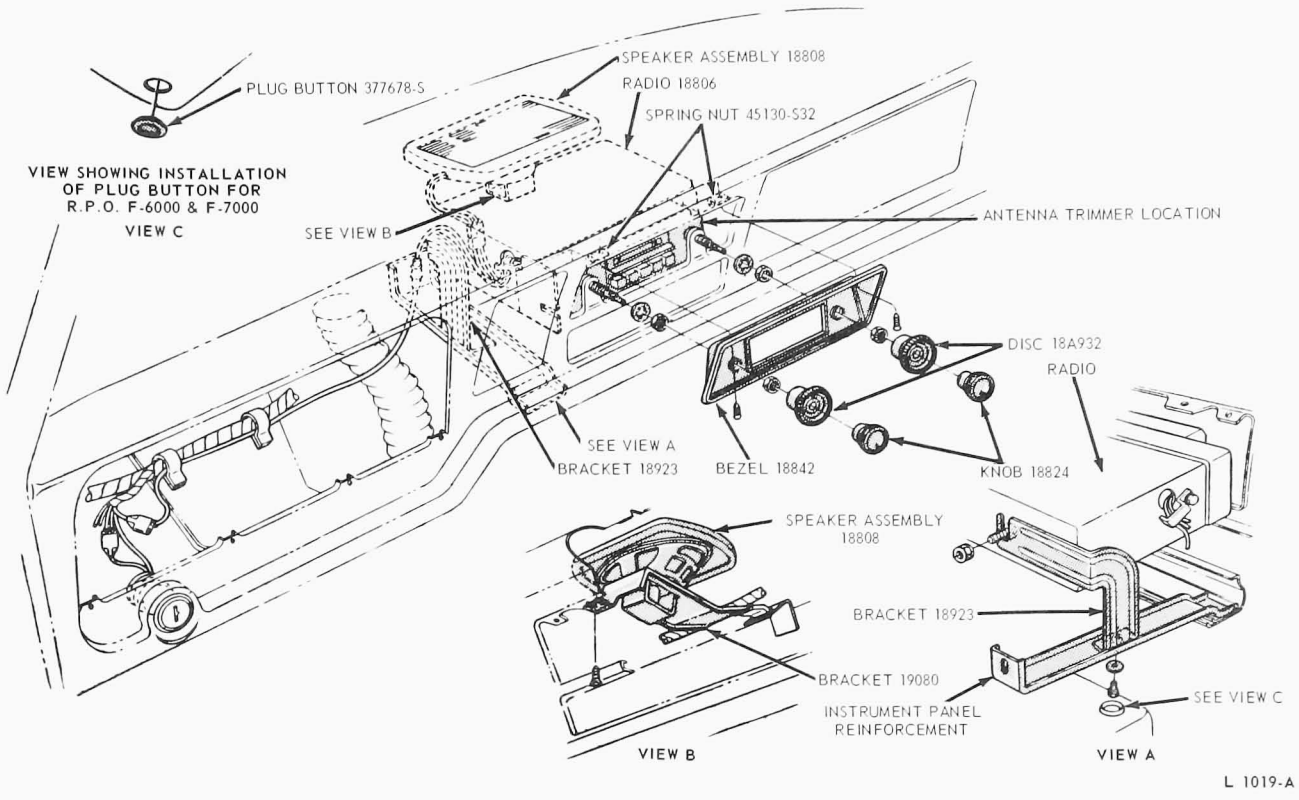

FIG. 2 Radio Installation—F-500-750

TESTING

RADIO

A radio tester, Tool T65P-18805-A, is designed for in vehicle usage to rapidly diagnose radio malfunctions and determine if the problem is in the radio, antenna, or the speaker. Testing instructions are located on the side of the tester housing.

The radio tester can save considerable time in servicing all models and makes of radios. Use of the tester eliminates the need for substituting known quality components.

ADJUSTMENTS

PUSH BUTTONS

Turn the radio on, and allow it to warm up for 15 minutes. Extend the antenna to a height of approximately 33 inches.

Pull out the push button to be set to unlock the push button mechanism. Tune in the desired station with the manual tuning knob. After the station is clearly tuned in, push the button straight in until it stops, then release it.

Repeat this procedure for the remaining buttons.

REMOVAL AND INSTALLATION

RADIO

F-100 THROUGH 350

Removal

1. Disconnect the battery ground cable.
2. Remove the ash tray and bracket.
3. Disconnect the antenna lead-in cable, speaker wires and radio feed (Power) wire.
4. Remove the bolt attaching the radio rear support to the lower edge of the instrument panel (Fig. 1).
5. If equipped with A/C, disconnect the left A/C duct hose from the A/C plenum.
6. Remove the knobs and discs from the radio control shafts.
7. Remove the bezel retaining nuts and washers from the radio control shafts, and remove the bezel.
8. Remove the nuts and washers from the radio control shafts, and remove the radio and bracket from the instrument panel.

Installation

1. Position the radio and bracket to the instrument panel, and install the nuts and washers on the radio control shafts.
2. Position the radio rear support to the lower edge of the instrument panel, and install the attaching bolt.
3. Connect the antenna lead-in cable, speaker wires and feed (Power) wires to the radio.
4. Position the bezel to the radio opening, and install the washers and nuts on the radio control shafts. Install the knobs and discs on the radio control shafts.
5. Check the radio operation and

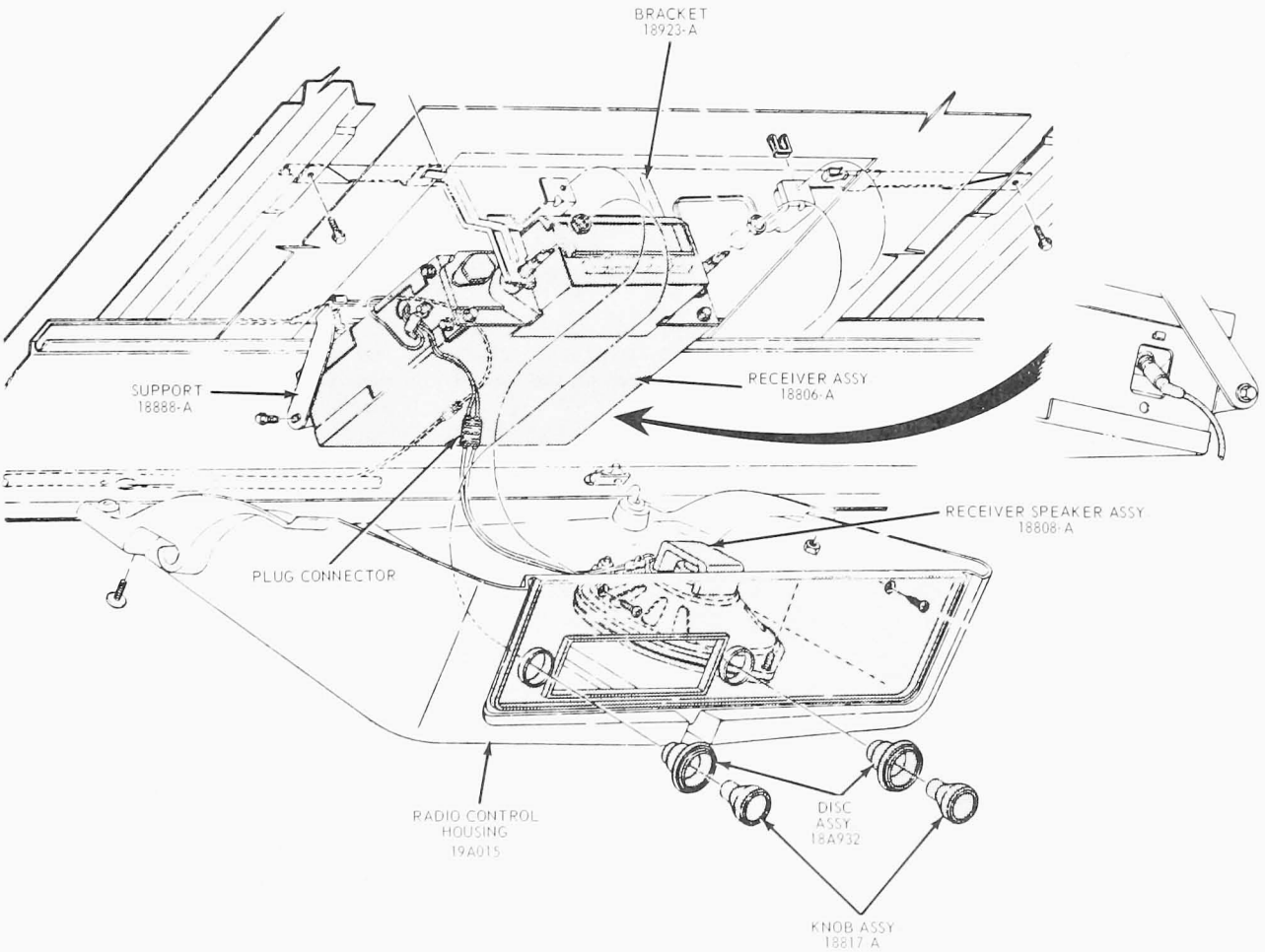

FIG. 3 Radio Installation—L-Series

adjust the antenna trimmer.
6. Connect the left A/C duct hose to the A/C plenum, if equipped with A/C.
7. Install the ash tray bracket and ash tray.

F-AND B-500 THROUGH 750

Removal

1. Disconnect the battery ground cable.
2. Disconnect the radio power lead, antenna lead-in cable and the speaker lead wires at the radio (Fig. 2).
3. Pull off the two control knobs and discs from the radio control shafts.
4. Remove the two bezel retaining nuts from the radio control shafts and two bezel attaching screws, and remove the bezel.
5. Remove the support bracket from the back of the radio.
6. Remove the two radio retaining nuts from the radio control shafts and remove the radio.

Installation

1. Position the radio to the instrument panel and install the two retaining nuts on the radio control shafts.
2. Install the support bracket on the back of the radio.
3. Tighten the retaining nuts on the radio control shafts.
4. Position the bezel to the radio and install the two bezel retaining nuts. Install the two bezel attaching screws.
5. Install the disc knobs and control knobs on the radio control shafts.
6. Connect the radio power lead, radio speaker wires and the antenna lead-in cable to the radio.
7. Connect the battery ground cable.
8. Check the radio operation and adjust the antenna trimmer.

L-SERIES

Removal

1. Remove the control knobs and discs from the radio control shafts (Fig. 3).
2. Disengage the sun visors from the radio housing retaining slots.
3. Remove the four radio housing mounting screws.
4. Move the radio housing rearward to clear the control shafts, lower and disconnect the speaker plug connector and remove the radio housing.
5. Disconnect the radio power lead and the antenna lead-in cable.
6. Remove the control shaft nuts and washers attaching the radio to the radio front support brackets.
7. Support the radio assembly and remove the radio rear support screws.

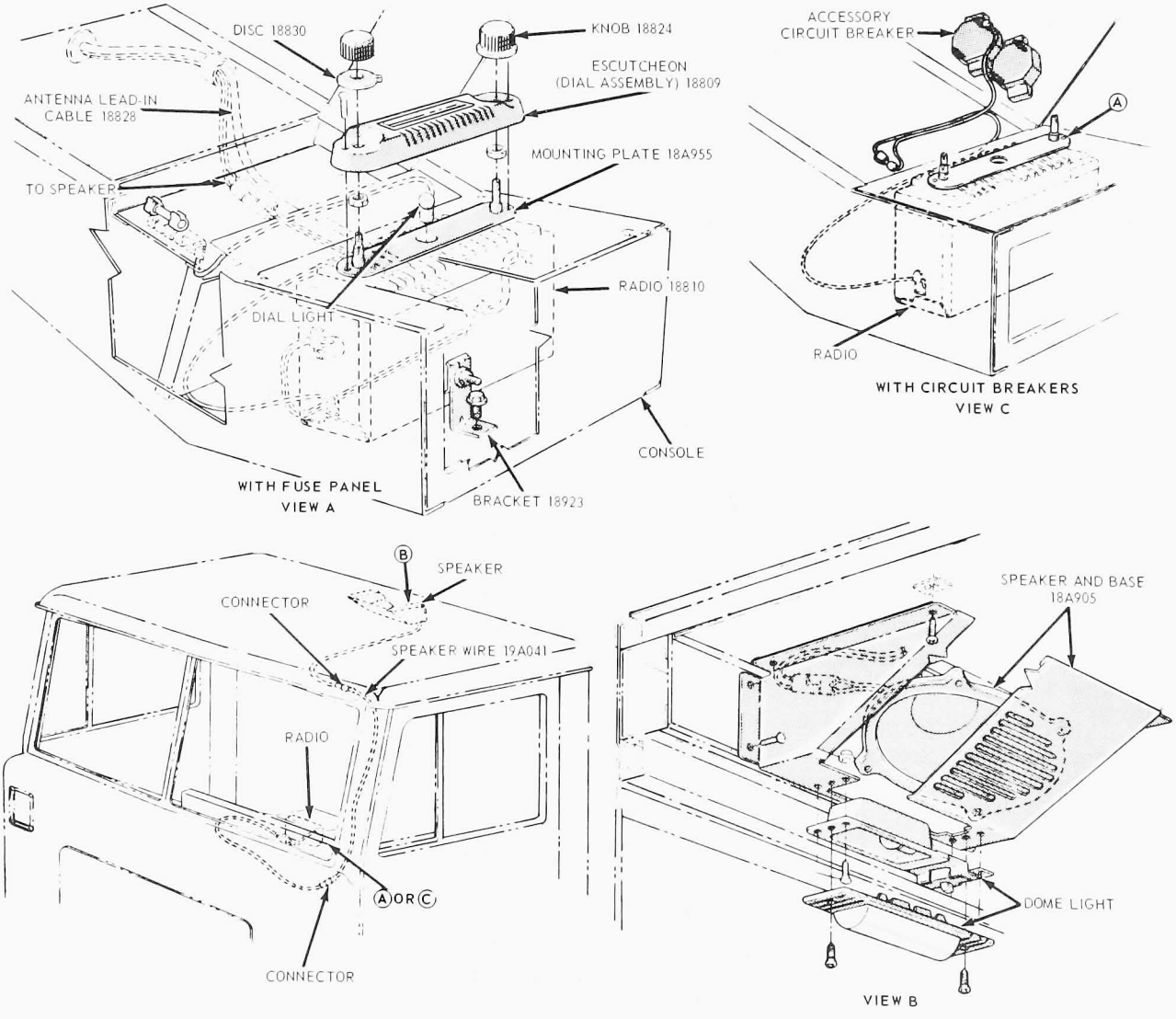

FIG. 4 Radio Installation—W-Series

8. Remove the radio assembly.

Installation

1. Position the radio assembly by inserting the control shafts into the radio front support bracket (Fig. 3).
2. Align the rear of the radio assembly and loosely install the rear support screws.
3. Install the control shaft nuts and washers and torque to specifications.
4. Tighten the rear support screws.
5. Connect the radio power lead and the antenna lead-in cable. **Do not operate the radio without the speaker connected, as it may damage the power transistor.**
6. Connect the speaker plug connector and if a new radio assembly is being installed, adjust the antenna trimmer. Refer to Adjustments.
7. Position the radio housing and install the four radio housing mounting screws. Torque the two mounting screws nearest the sun visor retaining slots to specifications.
8. Install the control knobs and discs.

C-SERIES

Removal

1. Disconnect the battery ground cable.
2. Disconnect the radio power lead, the antenna lead, and the speaker lead (Fig. 5).
3. Pull off the two control knobs. Remove the dial assembly attaching screws, and remove the dial assembly.
4. Remove the support bracket to instrument panel attaching screw.
5. Remove the retaining nuts, mounting plate, and remove the radio.
6. Remove the support bracket from the radio.

Installation

1. Install the support bracket on the radio.
2. Position the radio to the instrument panel (Fig. 5).
3. Position the mounting plate over the radio control shafts, and install the retaining nuts.
4. Install the dial assembly and control knobs. Rotate the tuning control to the clockwise stop to align the pointer with the tuner.
5. Install the radio support bracket attaching screw.
6. Connect the speaker lead, radio, power lead, and the antenna lead-in cable.
7. Connect the battery ground cable.
8. Check the operation of the radio and adjust the antenna trimmer.

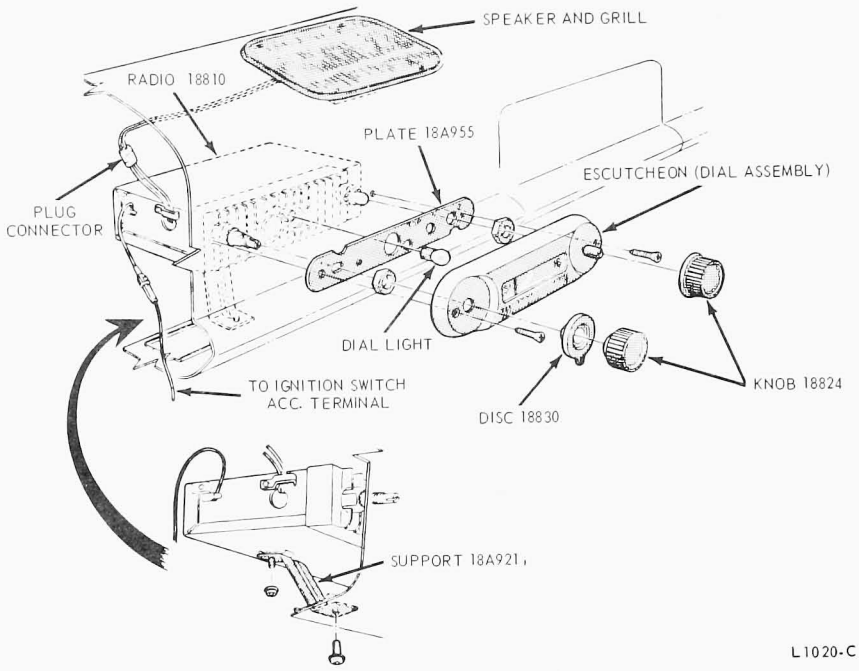

FIG. 5 Radio Installation—C-Series

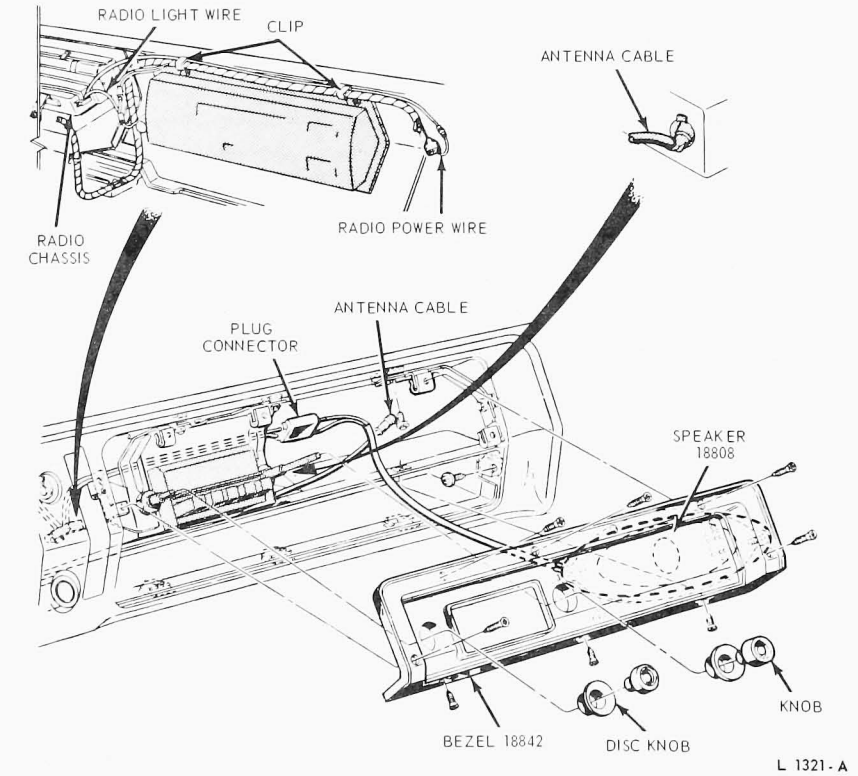

FIG. 6 Radio Installation—Econoline

ECONOLINE

Removal

1. Disconnect the ground cable from the battery.

2. Remove eight screws attaching the instrument cluster to the instrument panel. Pull the cluster away from the instrument panel and disconnect the speedometer cable from the speedometer. Allow the instrument cluster to hang out of the opening.
3. Disconnect the radio power and light wires at the connectors (Fig. 6).
4. From under the hood, remove the nut attaching the radio rear mounting bracket to the dash panel (Fig. 6).
5. Remove the knobs from the radio control shafts.
6. Remove eight screws attaching the radio bezel to the instrument panel. Pull the bezel away from the radio and disconnect the speaker wires at the multiple connector.
7. Remove the radio power wire from the two clips over the instrument cluster opening (Fig. 6).
8. Disconnect the antenna lead-in cable from the radio.
9. Remove three screws attaching the radio and mounting bracket to the radio opening, and remove the radio and bracket from the vehicle.
10. Remove the two nuts from the radio control shafts and remove the mounting bracket from the radio.

Installation

1. Position the mounting bracket to the front of the radio and install the two retaining nuts.
2. Position the radio and mounting bracket in the instrument panel opening. Route the power wire through the clips over the instrument cluster opening.
3. Install the three radio mounting bracket attaching screws.
4. Connect the antenna lead-in cable to the radio.
5. Connect the radio power and dial light wires at the connectors.

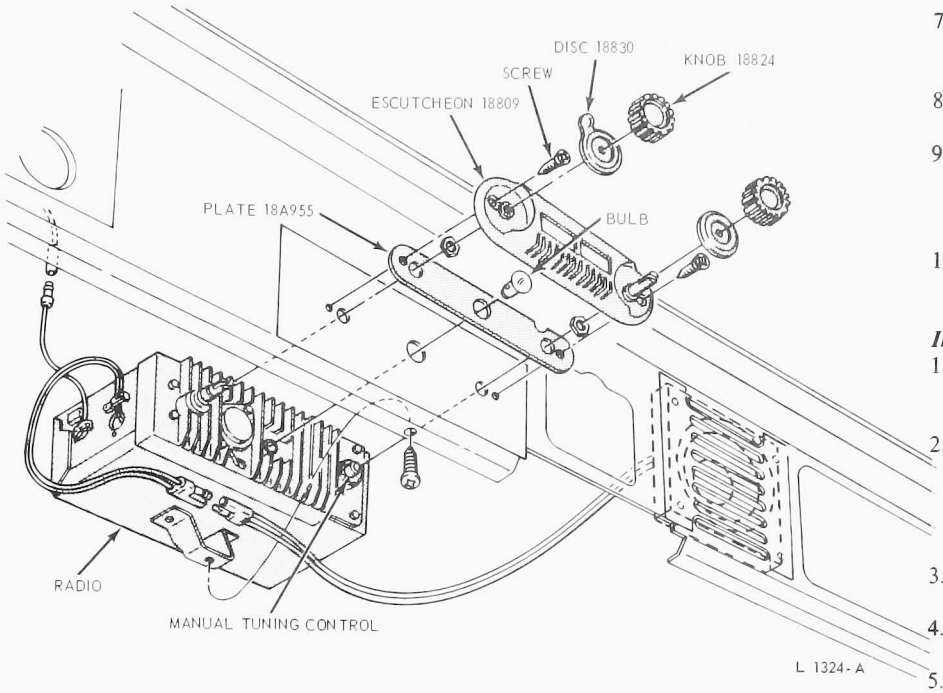

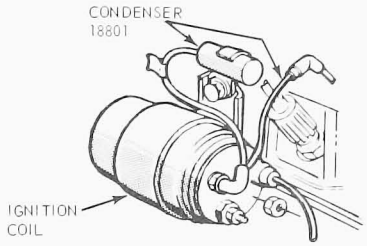

6 CYLINDER ENGINES
F-500 THRU F-750

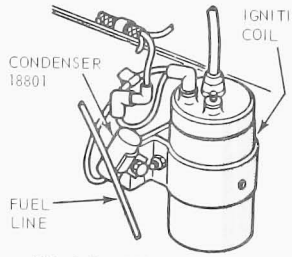

330, 361 & 391 C.I.D. ENGINES
F-500 THRU F-750

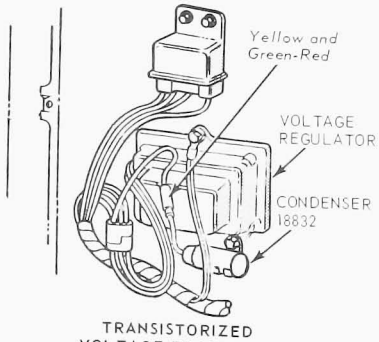

TRANSISTORIZED
VOLTAGE REGULATOR

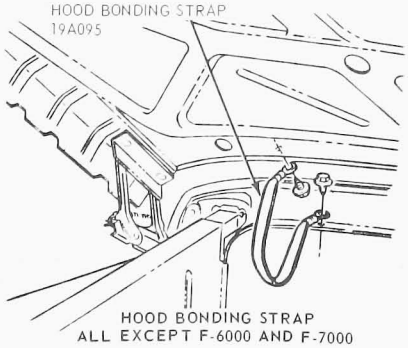

HOOD BONDING STRAP
ALL EXCEPT F-6000 AND F-7000

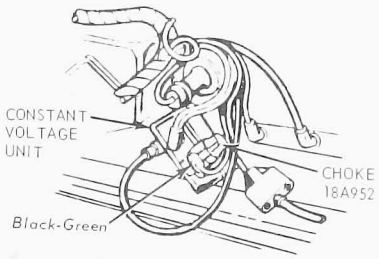

RADIO CHOKE AT REAR
OF INSTRUMENT CLUSTER
F-500 THRU F-750

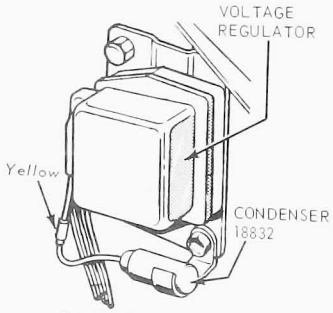

ELECTRO-MECHANICAL
VOLTAGE REGULATOR

L1025-C

FIG. 8 Radio Suppression Equipment—F-Series

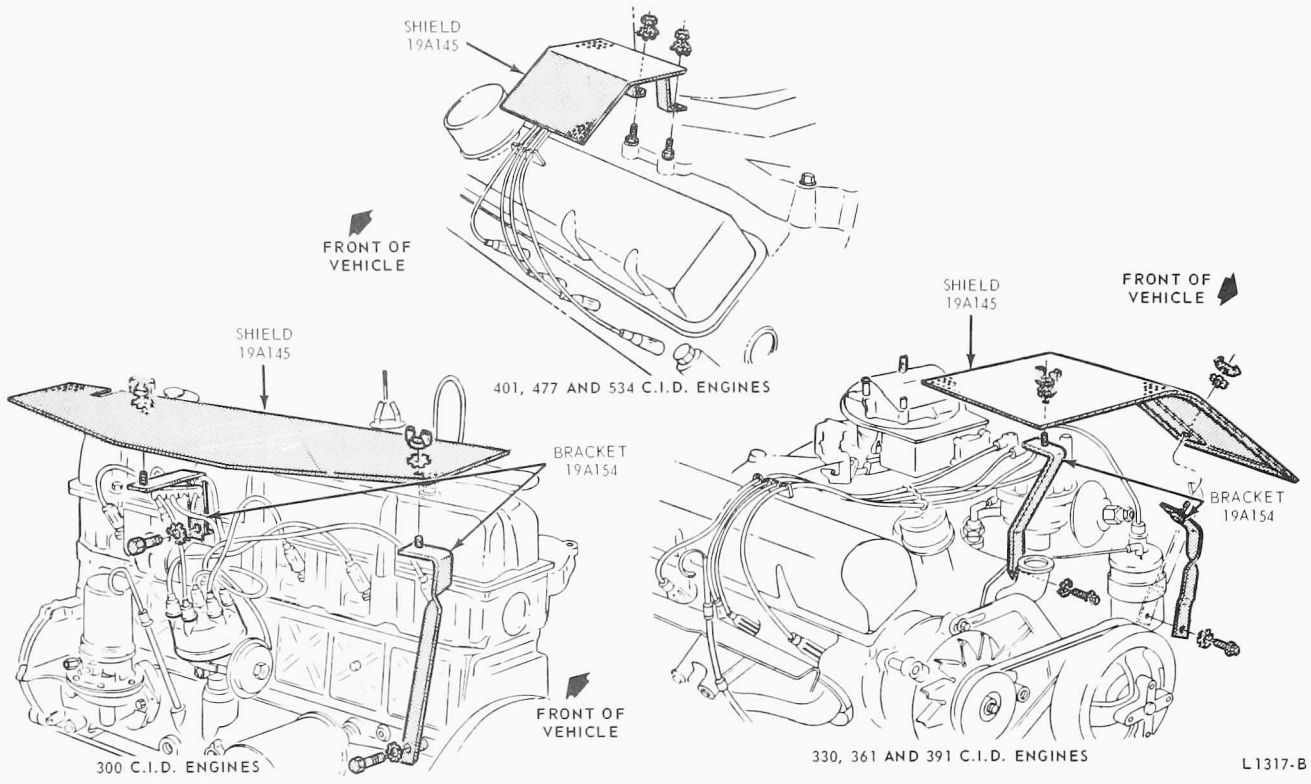

FIG. 9 Radio Suppression Equipment—L-Series

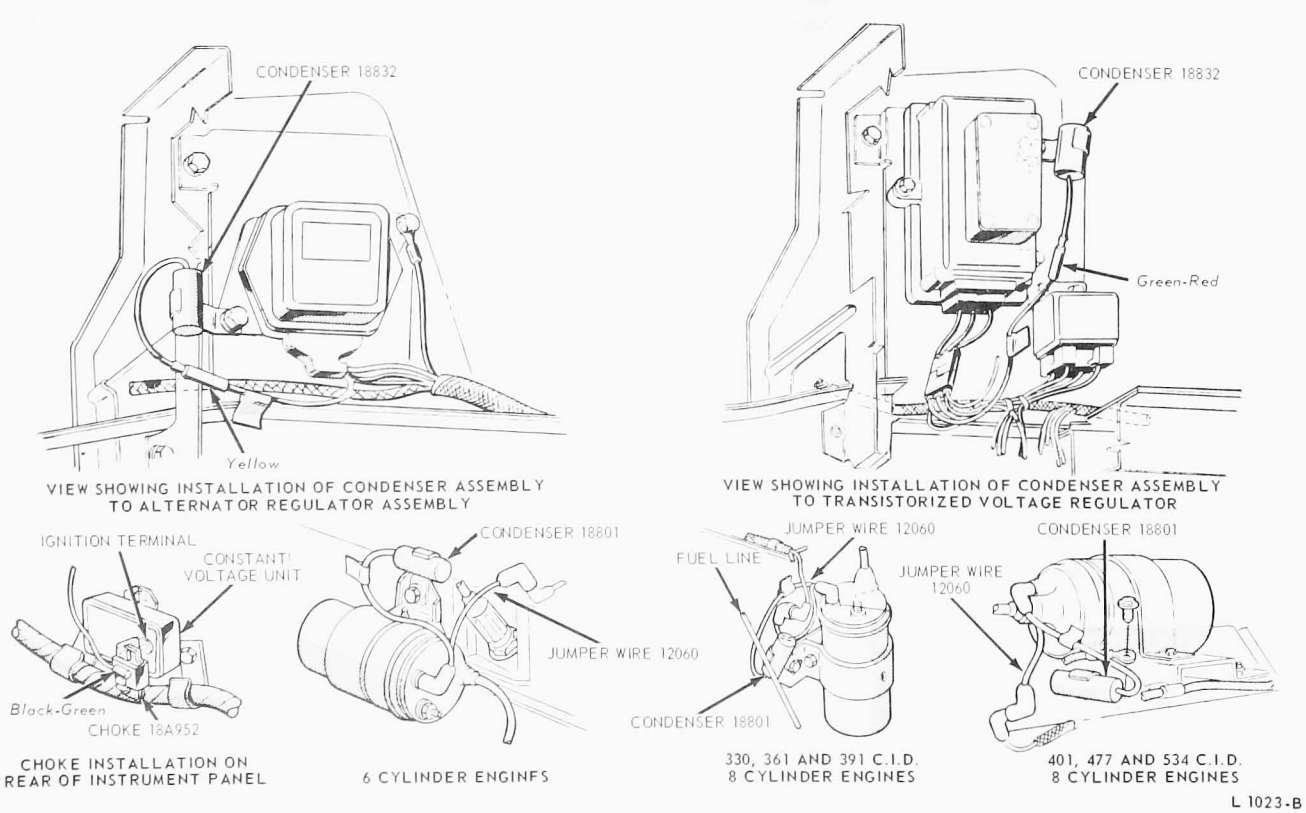

FIG. 10 Radio Suppression Equipment—C-Series

6. Connect the radio speaker wires and position the radio bezel to the radio opening. Install the eight bezel attaching screws.
7. Install the radio control knobs.
8. Connect the speedometer and install the instrument cluster.
9. Install the radio rear bracket attaching nut under the hood.
10. Connect the battery ground cable.
11. Check the operation of the radio and adjust the antenna trimmer.

BRONCO

Removal

1. Disconnect the radio lead wire at the fuse panel.
2. Disconnect the speaker leads at the receptacle on the underside of the radio chassis (Fig. 7).
3. Disconnect the antenna lead at the receptacle on the right side of the radio chassis.
4. Remove (pull) the volume control and the manual tuning control knobs from the shafts.
5. Remove the screws that retain the dial assembly to the instrument panel, and remove the dial assembly.
6. Remove the retaining nuts and the retaining plate that secure the radio to the instrument panel.
7. Remove the radio bottom support bracket retaining screw and remove the radio assembly from the instrument panel.

Installation

1. Position the radio to the inner side of the instrument panel, and install the right and left support bracket to radio retaining nuts (Fig. 7).
2. Position the retaining plate to the outer side of the instrument panel over the pilot light and control shafts, and install the retaining nuts.
3. Position the dial assembly, install the retaining screw, and seat the control knobs on the control shafts.
4. Connect the speaker leads, the antenna lead, and the radio power lead wire at the fuse panel.
5. Calibrate the dial pointer with the tuner by rotating the tuning knob until the dial pointer reaches the end of its travel at the right side of the dial.
6. Check the operation of the radio and adjust the antenna trimmer.

W-SERIES

Removal

1. Disconnect the battery ground cable.
2. Remove the control knobs and disc from the radio.
3. Remove the dial assembly attaching screws and remove the dial assembly (Fig. 4).
4. Remove the control shaft retaining nuts and remove the dial mounting plate.
5. Remove the console cover and disconnect the radio power lead, speaker leads, and the antenna lead-in cable.
6. Loosen the support bracket-to-radio retaining nut, and remove the radio.

Installation

1. Position the radio to the console and support bracket. Position the radio to fit flush against the console cover, and tighten the support bracket retaining nut (Fig. 4).
2. Connect the radio power lead, speaker leads, and the antenna lead-in cable.
3. Connect the battery ground cable.
4. Turn the radio ON and adjust the antenna trimmer, if required.
5. Install the console top cover.
6. Position the dial mounting plate over the control shafts and install the retaining nuts.
7. Install the dial assembly, disc, and knobs. Rotate the tuning control to the clockwise stop. This will align the dial pointer with the tuner.

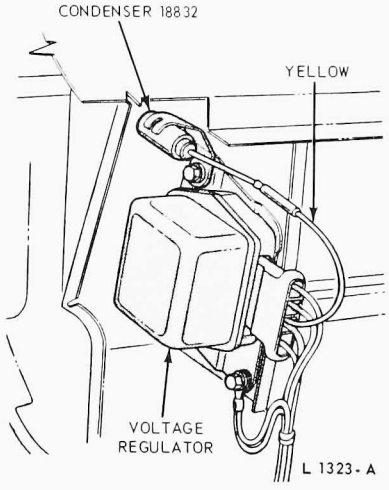

FIG. 11 Radio Suppression Equipment—Econoline

RADIO SUPPRESSION EQUIPMENT

The radio suppression equipment used on the different models is shown in Figs. 8 thru 13. When replacing any radio suppression equipment components, be sure that a good contact is made at all attachments. Remove any paint or dirt from between a condenser and its ground. Tighten all nuts and bolts securely.

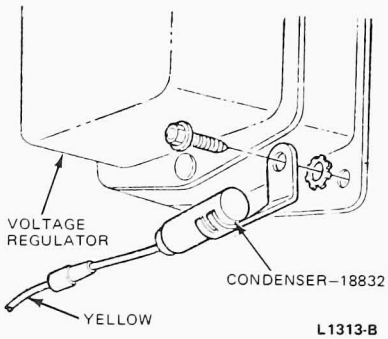

FIG. 12 Radio Suppression Equipment—Bronco

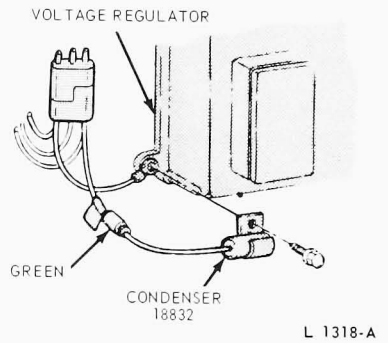

FIG. 13 Radio Suppression Equipment—W-Series

PART 35-11 Antennas

REMOVAL AND INSTALLATION

ANTENNA

F-SERIES

Removal

1. Disconnect the antenna lead-in cable from the radio (Figs. 1 and 2).
2. Disengage the cable from the three clips along the lower edge of the instrument panel.
3. Unsnap the cap from the antenna base and remove the cap.
4. Remove four antenna attaching screws and remove the antenna and lead-in cable from the vehicle.

Installation

1. Place the mounting pad on the cowl panel over the antenna opening (Figs. 1 and 2).
2. Insert the antenna lead-in cable into the antenna hole in the cowl and through the grommet until the antenna base is seated on the cowl. **The grommet must be firmly seated to prevent air and water leakage.**
3. Install the four antenna attaching screws.
4. Place the cap in position over the antenna base and snap the cap onto the base.
5. Route the antenna lead-in cable along the lower edge of the instrument panel and place in the three clips.
6. Connect the antenna lead-in cable to the radio and check the radio operation.

L-SERIES

Removal

1. Remove the headlining trim panel and the radio housing.
2. Disconnect the antenna lead-in cable from the radio (Fig. 3).
3. Unscrew and remove the antenna rod assembly.
4. Support the base and cable assembly and remove the stanchion nut, stanchion and gasket.
5. Remove the base and cable assembly, collar and insulator.

Installation

1. Position the collar and insulator on the base and cable assembly (Fig. 3).
2. Insert the base and cable assembly, collar and insulator into the drilled antenna opening.
3. Install the gasket, stanchion and stanchion nut.
4. Thread the rod assembly onto the base assembly and torque to 35-50 in-lbs.
5. Install the headlining trim panel.
6. Plug the antenna lead-in cable into the radio assembly and adjust the antenna trimmer.
7. Install the radio housing.

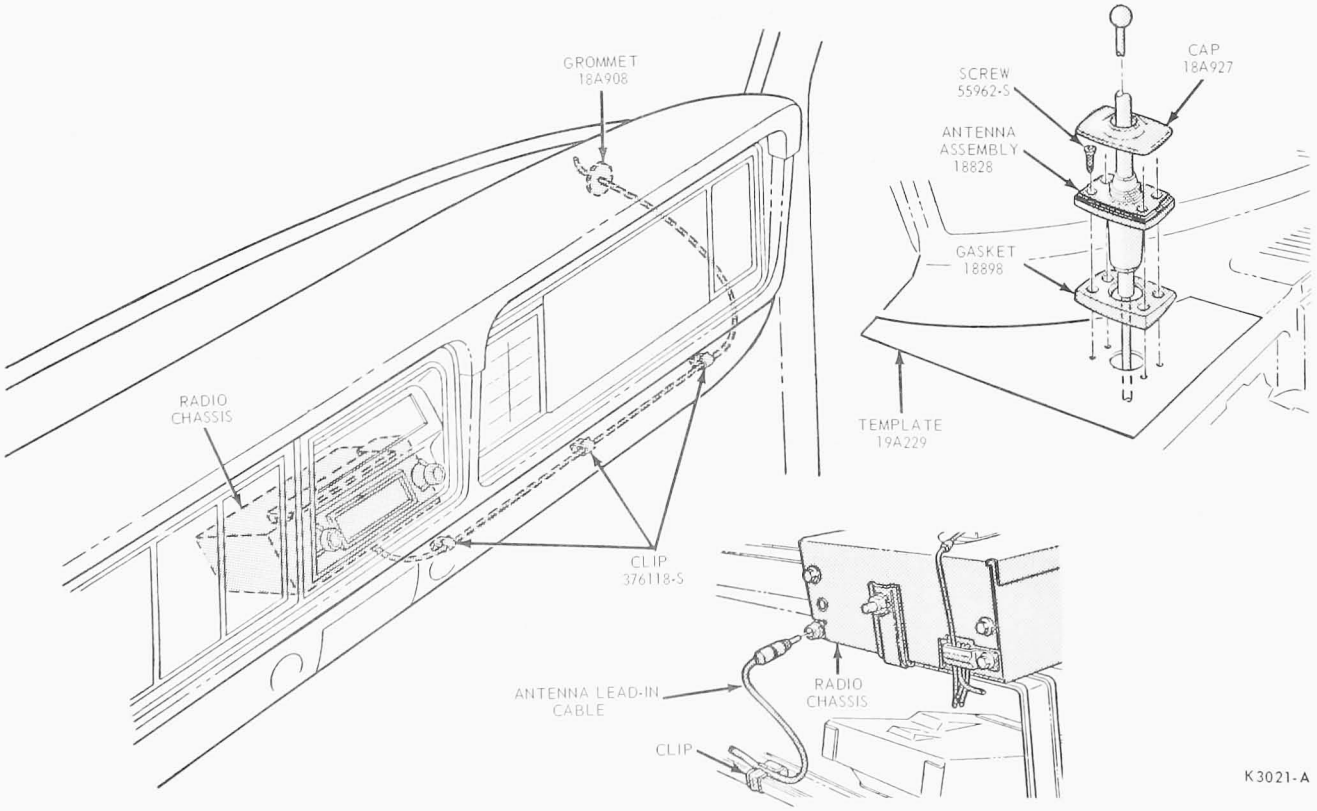

FIG. 1 Antenna Installation—F-100 Through F-350 the radio (Figs. 1 and 2).

C-SERIES

The tilt cab antenna is installed from the underside of the cowl.

Removal

1. Disconnect the antenna lead-in cable from the radio.
2. Remove the mounting nut and stanchion assembly (Fig. 4).
3. Push the antenna base out through the right hand door upper hinge opening.
4. Remove the antenna and lead-in cable.

Installation

1. Insert the tip of the new antenna through the right hand door upper-hinge opening and through the antenna mounting hole (Fig. 4).
2. Pull the antenna into position. Install the stanchion and nut. Tighten the nut to 15 in-lbs torque.
3. Route the antenna lead through the opening under the instrument panel, and plug the connector into the antenna socket of the radio chassis. Seat the cable grommet into the hole in the cowl.
4. Check the operation of the radio and adjust the antenna trimmer.

W-SERIES

Removal

1. Disconnect the antenna lead-in cable from the antenna (Fig. 5).
2. Remove the two nuts, washers, and insulator attaching the antenna to the cab and remove the antenna.

Installation

1. Position the antenna to the cab and install the insulator, washers, and nuts (Fig. 5).
2. Connect the lead-in cable to the antenna.
3. Check the operation of the radio and adjust the antenna trimmer.

ECONOLINE

Removal

1. Disconnect the antenna lead from the radio receiver cable (Fig. 6).
2. Pull the antenna lead through the grommet located under the dash panel.
3. Remove the grommet from the side cowl panel.
4. Remove the antenna mounting nut and stanchion.
5. Remove the antenna and retainer assembly from the vehicle.

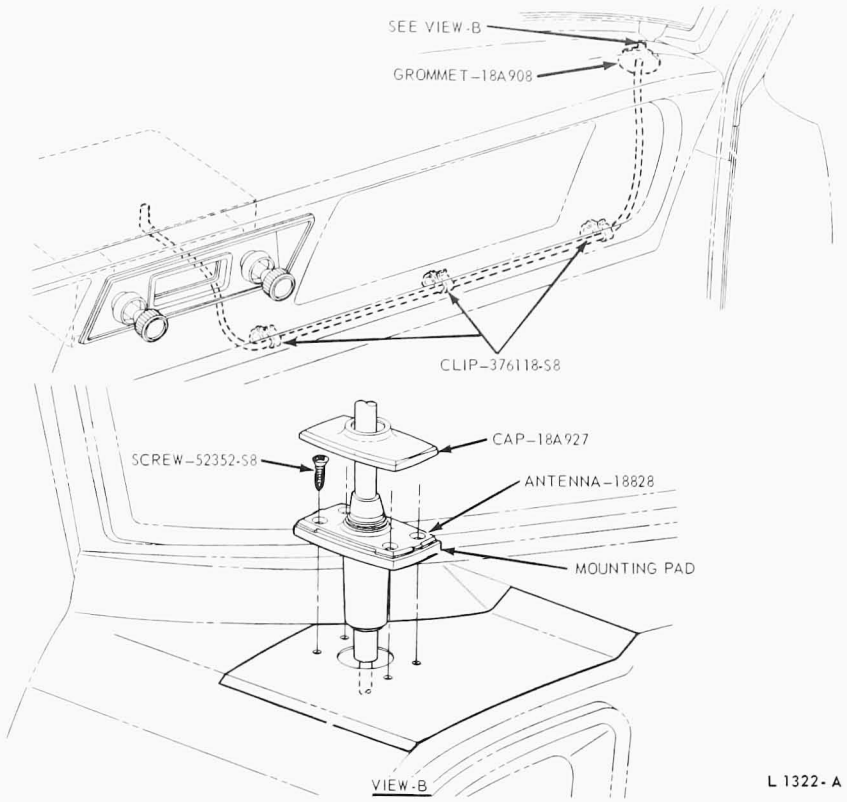

FIG. 2 Antenna Installation—F-500 Through F-750

Installation

1. Feed the antenna lead through the antenna mounting opening, side cowl panel and through the grommet located under the dash panel.
2. Connect the antenna lead to the radio receiver cable.
3. Position the grommet which is part of the antenna lead in the side cowl panel. Pull in hard on the lead to seat the grommet.
4. Position the antenna, antenna retainer and stanchion and install the mounting nut.
5. Check the operation of the radio and adjust the antenna trimmer.

BRONCO

Removal

1. Remove the bolt and nut retaining the antenna to the mounting bracket (Fig. 7).
2. Remove the nut and stanchion assembly.
3. Disconnect the antenna lead from the radio. Pull the lead back to the cowl.
4. Remove the antenna from the underside of the fender.

Installation

1. Position the antenna from the underside of the fender. Install the stanchion assembly and start the nut (Fig. 7).
2. Position the antenna in the mounting bracket, tighten the stanchion nut and install the bolt and nut in the mounting bracket.
3. Feed the lead through the cowl. Route the lead behind the steering column wire harness and over the steering column to the radio.
4. Plug the antenna into the radio chassis and check the operation of the radio.
5. Adjust the antenna trimmer.

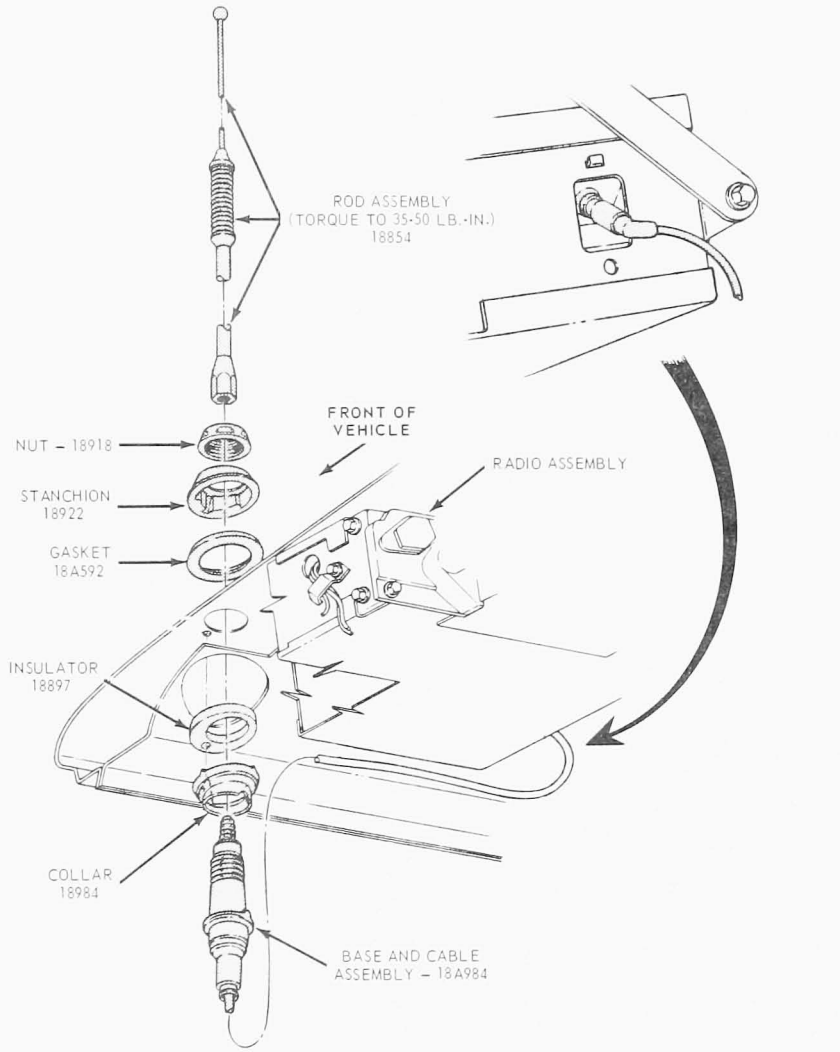

FIG. 3 Antenna Installation—L-Series

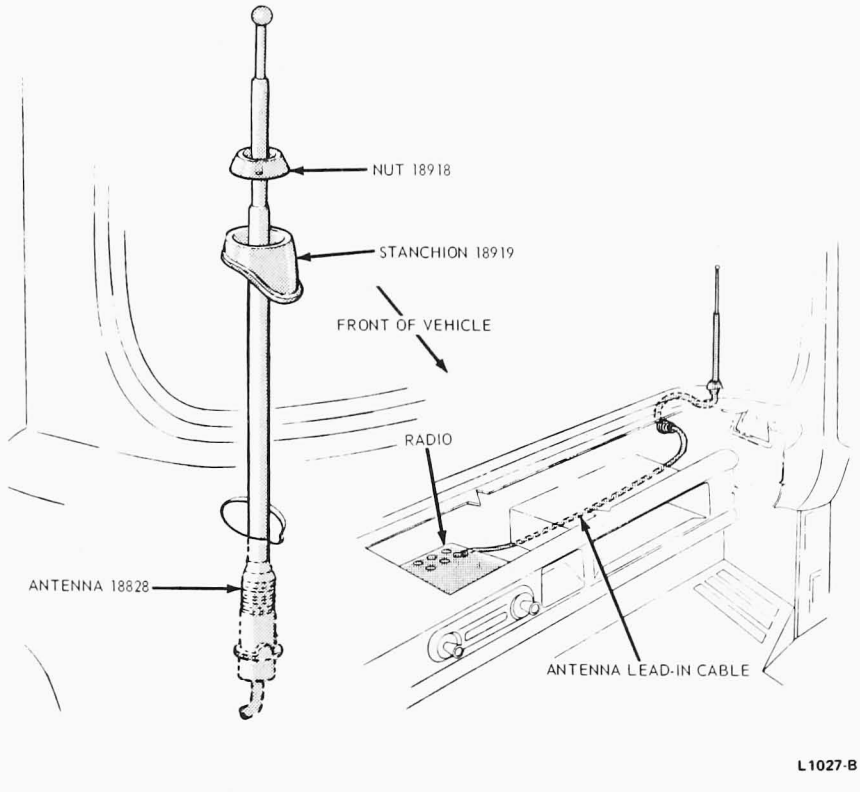

FIG. 4 Antenna Installation—C-Series

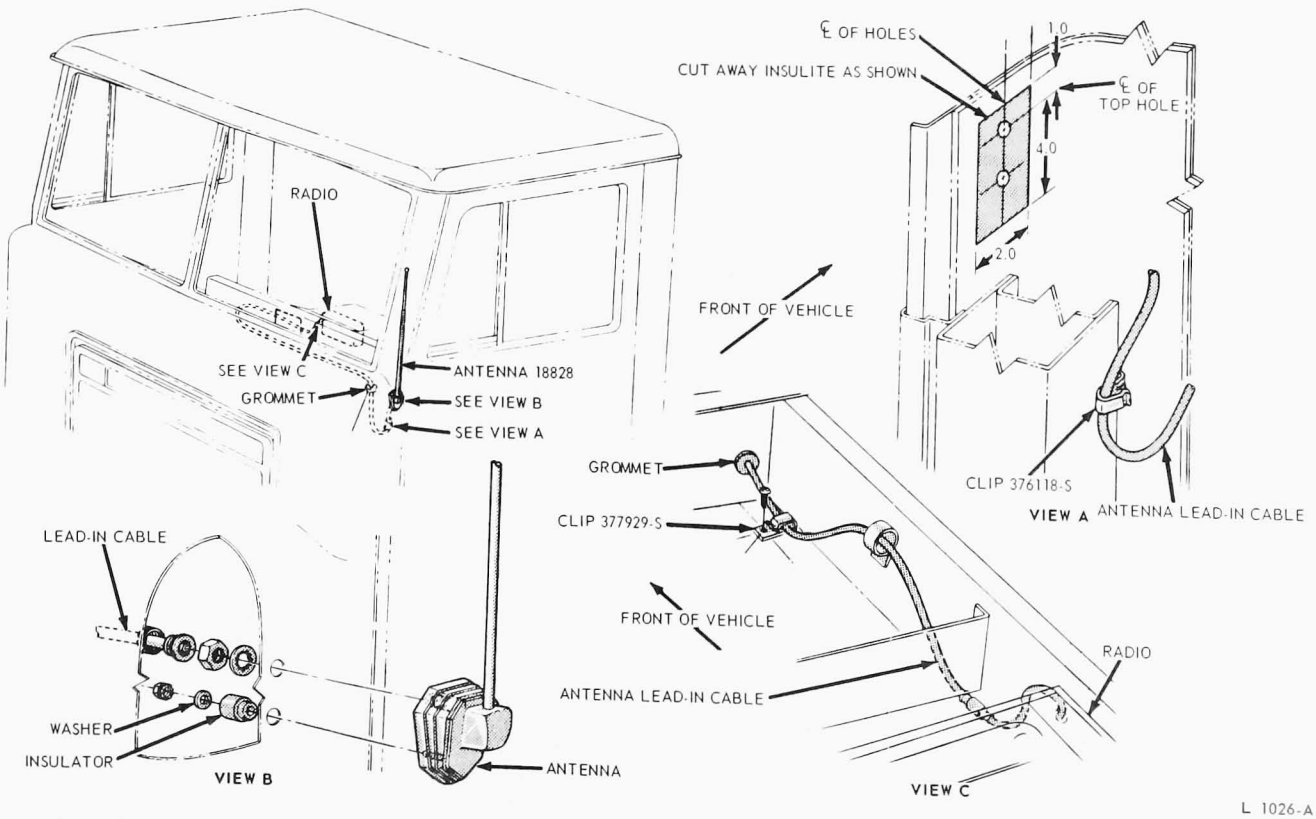

FIG. 5 Antenna Installation—W-Series

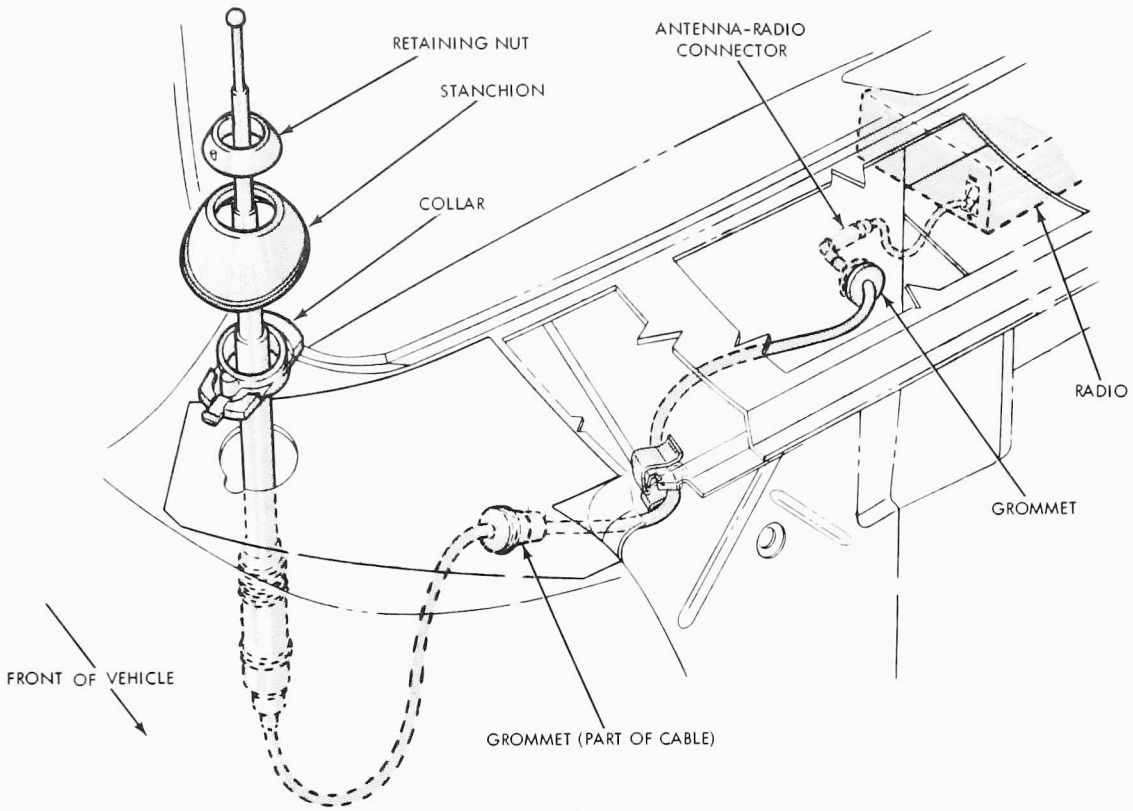

FIG. 6 Antenna Installation—Econoline

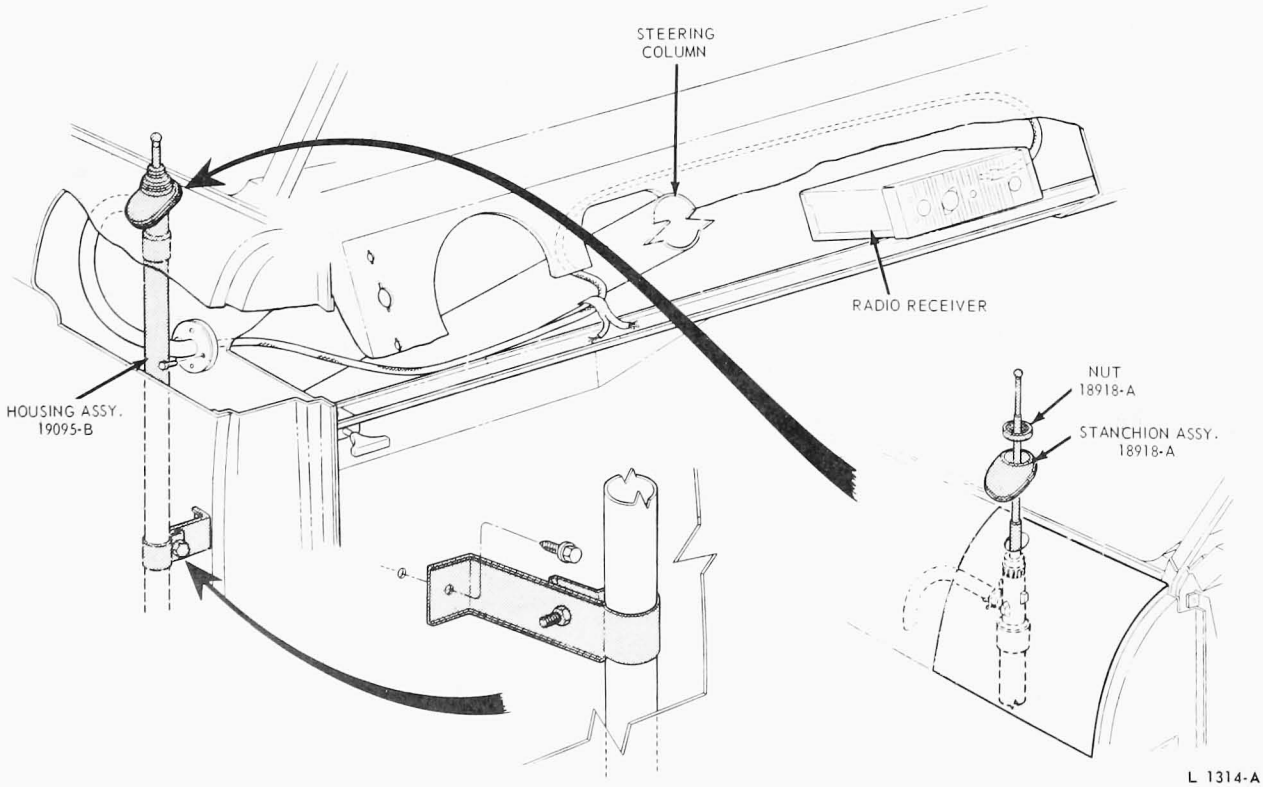

FIG. 7 Antenna Installation—Bronco

PART 35-31 Speakers

COMPONENT INDEX Applies to Models as Indicated	All Models	F-Series	C-Series	L-Series	W-Series	Bronco	Econoline
DESCRIPTION	31-01						
REMOVAL AND INSTALLATION		31-01	31-03	31-02	31-03	31-04	31-03

A page number indicates that the item is for the vehicle(s) listed at the head of the column.

DESCRIPTION

SPEAKER DESCRIPTION

The radio speakers used in all vehicles have 3.2 ohms impedance. The new speakers are not interchangeable with the 8 ohm speakers used before 1972.

REMOVAL AND INSTALLATION

SPEAKER

F-100 THROUGH F-350

AM Radio Without Air Conditioning

1. Disconnect the speaker wires at the connector behind the radio.**Do not operate the radio with the speaker disconnected.**
2. Remove two screws attaching the speaker to the instrument panel (Fig. 1), and remove the speaker from under the instrument panel.
3. To install, position the speaker to the underside of the instrument panel and install the two attaching screws.
4. Connect the speaker wires to the radio and check the operation of the speaker.

AM Radio with Air Conditioning

1. Disconnect the speaker wires at the connector behind the radio.**Do not operate the radio with the speaker disconnected.**
2. Remove the two grille assembly retaining screws (Fig. 1).
3. Remove two plate assembly attaching screws and lift the plate and speaker from the instrument panel. Then, remove the speaker from the plate assembly (Fig. 1).
4. To install, assemble the speaker to the plate assembly. Then install the plate attaching screws and the grille.
5. Connect the speaker wires, and check the speaker operation.

AM-FM Radio

1. Remove the door trim panel and watershield.
2. Disconnect the speaker wires at the connector (Fig. 1).**Do not operate the radio with speakers disconnected.**
3. Remove four speaker attaching screws and remove the speaker.
4. To install, connect the speaker wires at the connector. Then, position the speaker to the door and install the attaching screws.
5. Check the speaker operation. Then, install the watershield and door trim panel.

F-500 THROUGH F-750

Removal

1. Disconnect the speaker wires at the connector (Fig. 2).**Do not operate the radio with the speaker disconnected.**
2. Remove the radio from the instrument panel.
3. Remove the speaker bracket retaining screw at the radio opening.
4. Remove the speaker bracket and speaker from the vehicle.

Installation

1. Position the speaker and speaker bracket to the instrument panel and install the bracket retaining screw (Fig. 2).
2. Install the radio.
3. Connect the speaker wires to the radio at the connector and check the operation of the radio and speaker.

L-SERIES

Removal

1. Remove the radio chassis housing from the roof panel.
2. Disconnect the speaker plug connector (Fig. 3).**Do not operate the radio when the speaker is disconnected.**
3. Remove the two speaker mounting nuts.
4. Remove the speaker.

Installation

1. Position the speaker on the radio chassis housing speaker mounting screws (Fig. 3).
2. Install the two speaker mounting nuts.
3. Connect the speaker plug connector.
4. Install he radio chassis on the roof panel.

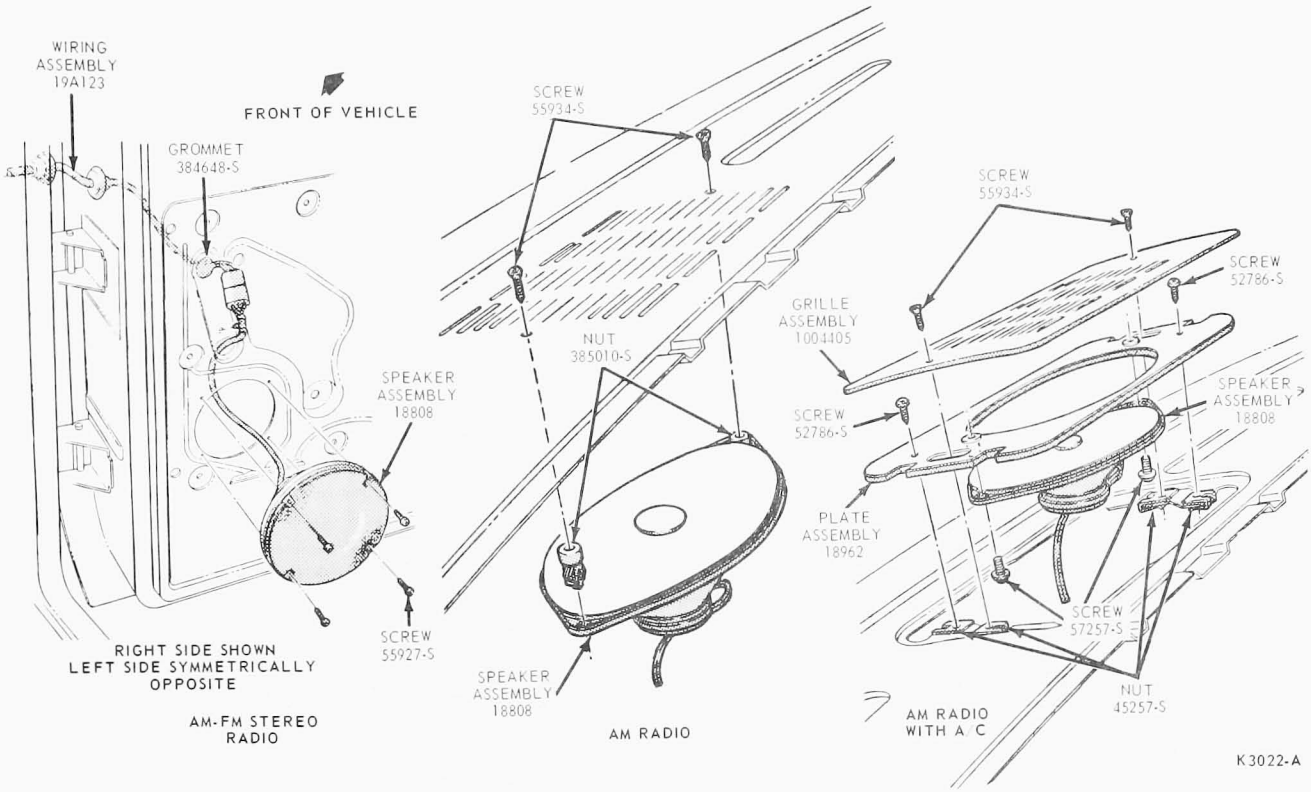

FIG. 1 Radio Speaker Installation—F-100 Through F-350

C-SERIES

Removal

1. Remove the four speaker mounting screws and wing-nuts (Fig. 4).
2. Disconnect the speaker plug connector. **Do not operate the radio when the speaker is disconnected.**
3. Remove the speaker.

Installation

1. Position the speaker under the instrument panel (Fig. 4).
2. Install the four speaker mounting screws and wing-nuts.
3. Connect the speaker plug connector.

W-SERIES

Removal

1. Remove eight screws attaching the speaker and base to the roof panel (Fig. 5).
2. Lower the speaker and base and disconnect the speaker and dome light wires at the connectors. **Do not operate the radio when the speaker is disconnected.**
3. Remove four screws attaching the speaker to the base, and remove the speaker.

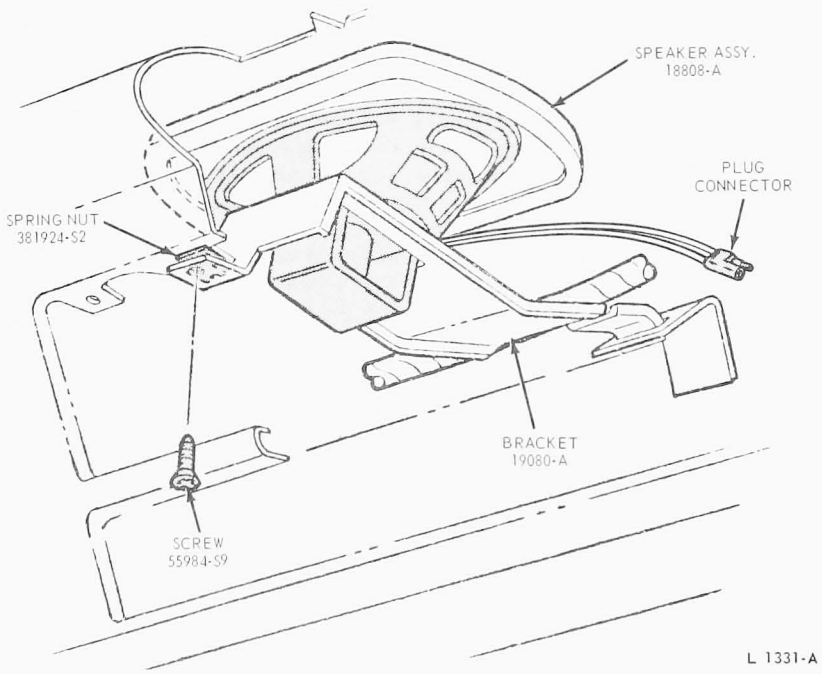

FIG. 2 Speaker Installation—F-Series

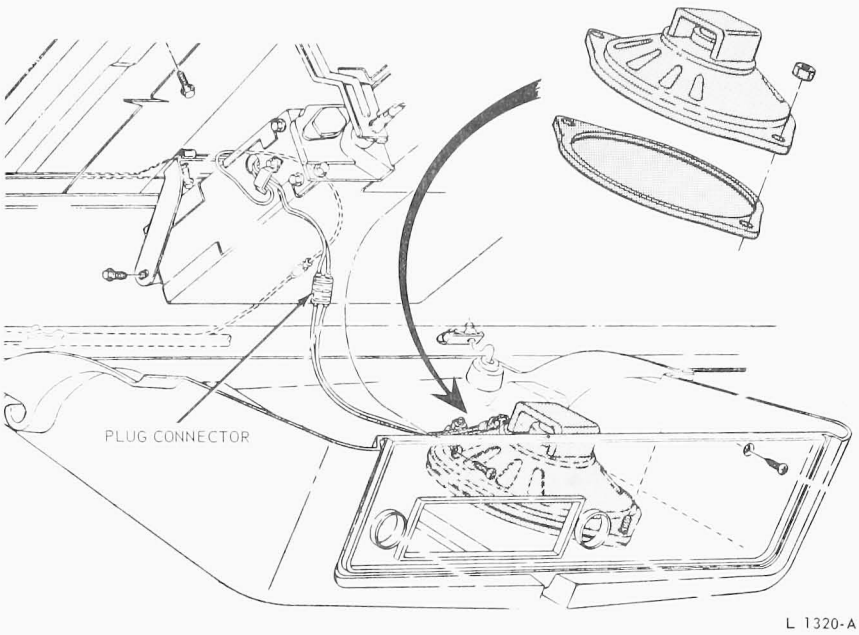

FIG. 3 Speaker Installation—L-Series

Installation

1. Position the speaker to the base, and install the four attaching screws (Fig. 5).
2. Connect the speaker and dome light wires and position the speaker and base to the roof panel.
3. Install the eight speaker and base attaching screws, and check the operation of the speaker.

ECONOLINE

Removal

1. Pull the radio control knobs off the radio control shafts.
2. Remove eight screws attaching the radio bezel to the instrument panel (Fig. 6).
3. Pull the bezel away from the radio, and disconnect the speaker wires at the multiple connector. **Do not operate the radio when the speaker is disconnected.**

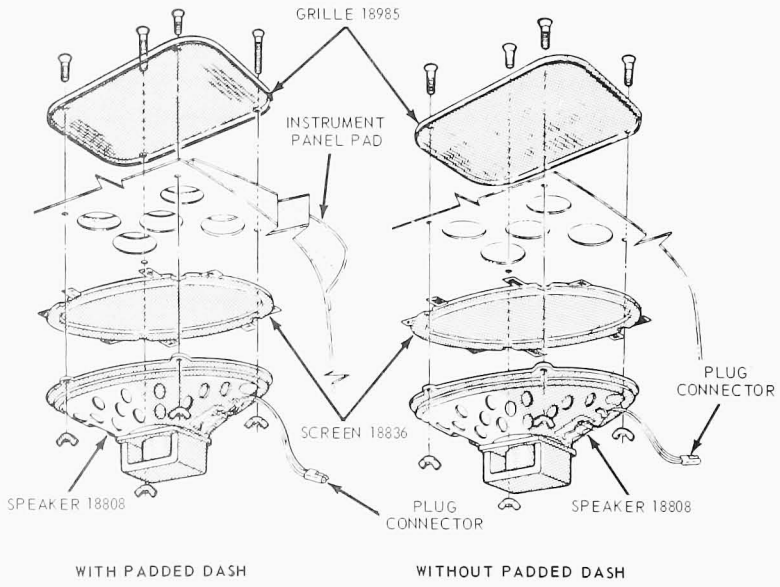

FIG. 4 Speaker Installation—C-Series

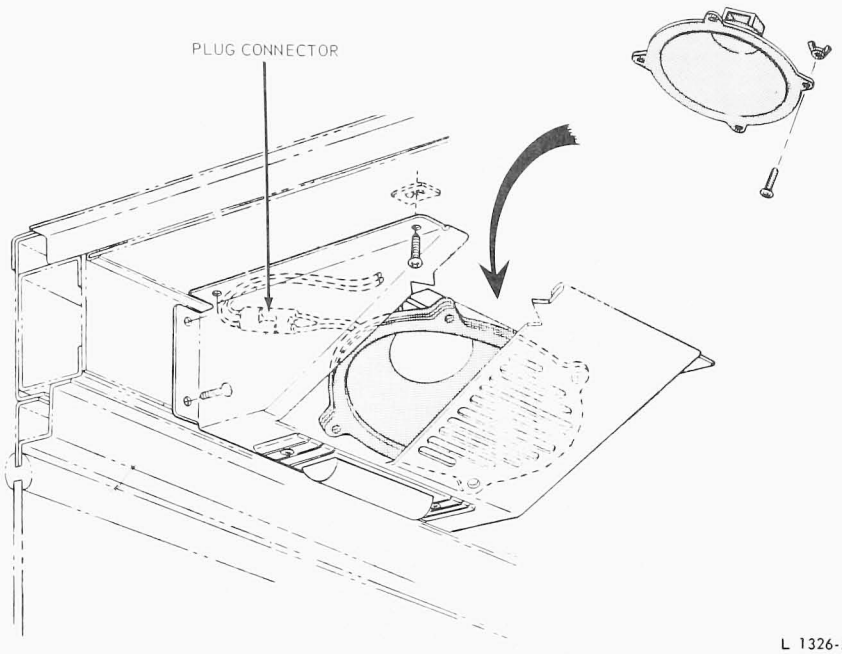

FIG. 5 Speaker Installation—W-Series

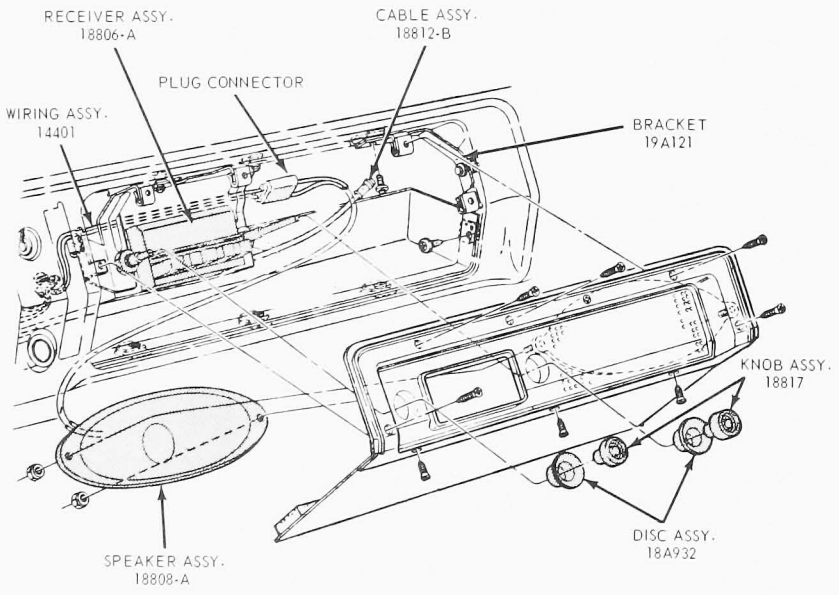

FIG. 6 Speaker Installation—Econoline

4. Remove two nuts attaching the speaker to the radio bezel and remove the speaker.

Installation

1. Position he radio speaker to the bezel and install the attaching nuts (Fig. 6).
2. Position the bezel to the radio, and connect the speaker wires at the multiple connector.
3. Install the eight radio bezel attaching screws and the radio control knobs.

BRONCO

Removal

1. Disconnect the speaker leads from the receptacle on the underside of the radio chassis.

Do not operate the radio when the speaker is disconnected.

2. Remove the speaker retaining screws (Fig. 7). and the speaker mounting board and speaker from the instrument panel.

Installation

1. Position the replacement speaker and mounting board to the instrument panel, and install the speaker retaining screws (Fig. 7).
2. Connect the speaker lead wires to the receptacle and check the operation of the radio.

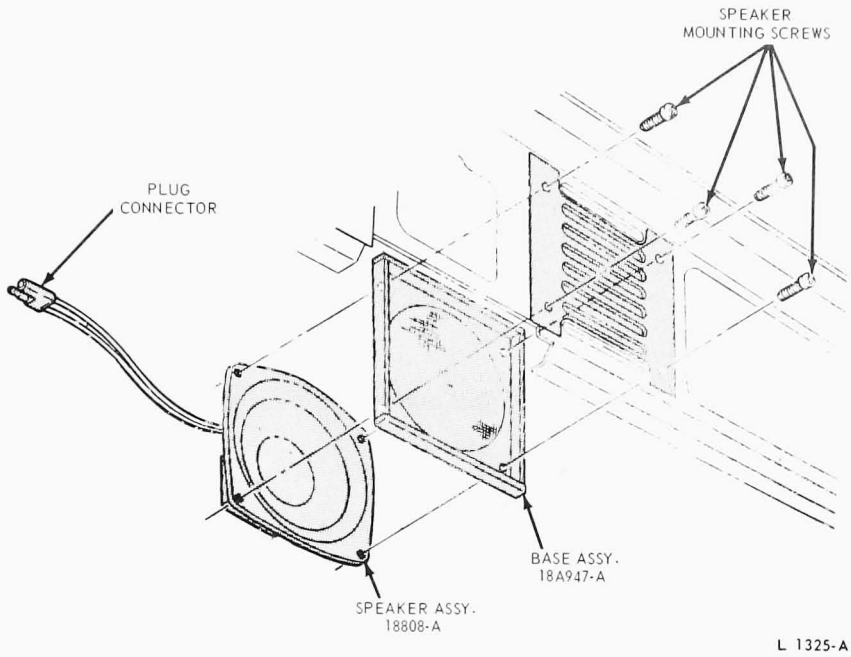

FIG. 7 Speaker Installation—Bronco

PART 35-40 Ash Receptacles and Cigar Lighter

REMOVAL AND INSTALLATION

ASH RECEPTACLES

Ash receptacle shield assemblies that retain the ash receptacles may be easily removed by first removing the ash receptacle. The shield assembly may then be removed by removing the shield assembly mounting screws.

CIGAR LIGHTERS

1. Disconnect he battery ground cable.
2. Remove the lighter element (Fig. 1).
3. Disconnect the push-on connector from the base of the lighter socket.
4. Remove the illuminating lamp socket (if so equipped) from the side of the lighter socket retainer by depressing both sides of the illuminating lamp socket and pulling away from the lighter socket retainer.
5. Unscrew and remove the socket retainer.
6. Remove the socket from the front of the instrument panel.

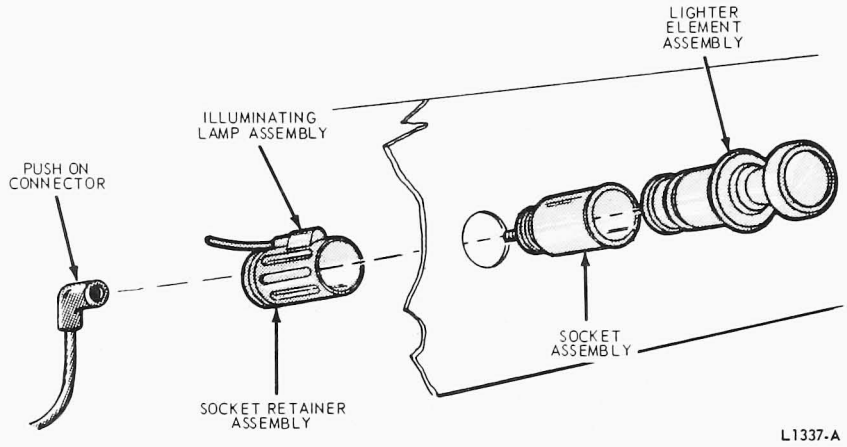

FIG. 1 Cigar Lighter Installation

PART 35-50 Mirrors—Inside and Outside

COMPONENT INDEX	Page	COMPONENT INDEX	Page
REMOVAL AND INSTALLATION		REMOVAL AND INSTALLATION - Cont.	
Inside Rear View Mirror	50-01	Remote Control Rear View Mirror	50-01
Outside Rear View Mirror	50-01		

REMOVAL AND INSTALLATION

INSIDE REAR VIEW MIRROR

Mirror Removal

1. Loosen the mirror assembly-to-mounting bracket set screw (Fig. 1).
2. Remove the mirror assembly by sliding upward and away from the mounting bracket.

Mounting Bracket Installation

1. Locate and mark the mirror mounting bracket location on the outside surface of the windshield with a wax pencil (Fig. 1).
2. Thoroughly clean the inside of the windshield with mild abrasive cleaning powder and a clean cloth saturated in alcohol. Then, use a paper towel and remove all cleaner from the windshield.
3. Roughen the bonding surface of the mounting bracket with fine grit sandpaper. Then, wipe the surface clean with a paper towel soaked in alcohol.
4. Using the applicator, apply a generous amount of Loctite Minute Bond Accelerator to the bonding surface of the mounting bracket. Allow the bonding material to dry for five minutes. Do not touch the mounting surface.
5. Apply a **thin** film of Accelerator to the mounting surface of the windshield. Allow the bonding material to dry for one minute.
6. Apply two drops of Loctite Minute Bond to the mounting surface of the bracket. Using a clean toothpick or wooden match, quickly spread the adhesive evenly over the mounting surface of the bracket.
7. Quickly position the mounting bracket on the windshield. The 3/8 inch circular depression in the bracket must be toward the bottom edge. Press the bracket against the windshield for about one minute.

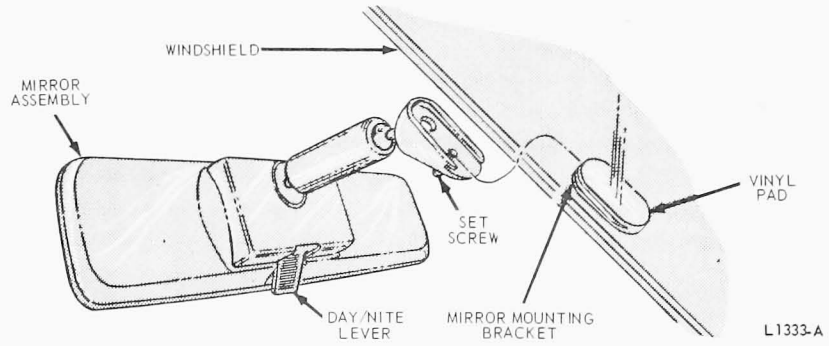

FIG. 1 Inside Rear View Mirror Installation

8. Allow the bond to set for five minutes. Then, remove any excess bonding material from the windshield with an alcohol dampened rag.

Mirror Installation

Attach the mirror to the mounting bracket and tighten the set screw to 5-15 in-lb.

OUTSIDE REAR VIEW MIRROR

CONVENTIONAL TYPE—BRONCO, ECONOLINE AND F-100-350

The conventional outside rear view mirror is mounted on the door. To remove the mirror, remove the attaching screws and lift off the mirror and gasket (Fig. 2).

WESTERN TYPE

The western type outside rear view mirrors (Fig. 3) are usually mounted on both doors. The mirrors may be removed from the mounting bracket by removing the attaching nuts.

MOUNTING BRACKETS

The mounting brackets are removed by removing either the mounting bracket stud nuts or by removing the mounting bracket screws (Fig. 4).

REMOTE CONTROL REAR VIEW MIRROR

Removal

1. Remove the bezel nut from the remote control actuator (Fig. 5).
2. Attach a pull cord to the remote control actuator.
3. Remove two mirror attaching screws and remove the mirror and control cables from the door. When the cables are out of the door, disconnect the pull cord from the remote control actuator. **Do not allow the pull cord end to be pulled into the door.**

Installation

1. Attach the pull cord to the remote control actuator.
2. Position the mirror to the door using the pull cord to route the cables and actuator through the door.
3. Install the two mirror attaching screws (Fig. 5).
4. Pull the remote control actuator through the hole in the door trim panel and install the bezel nut on the

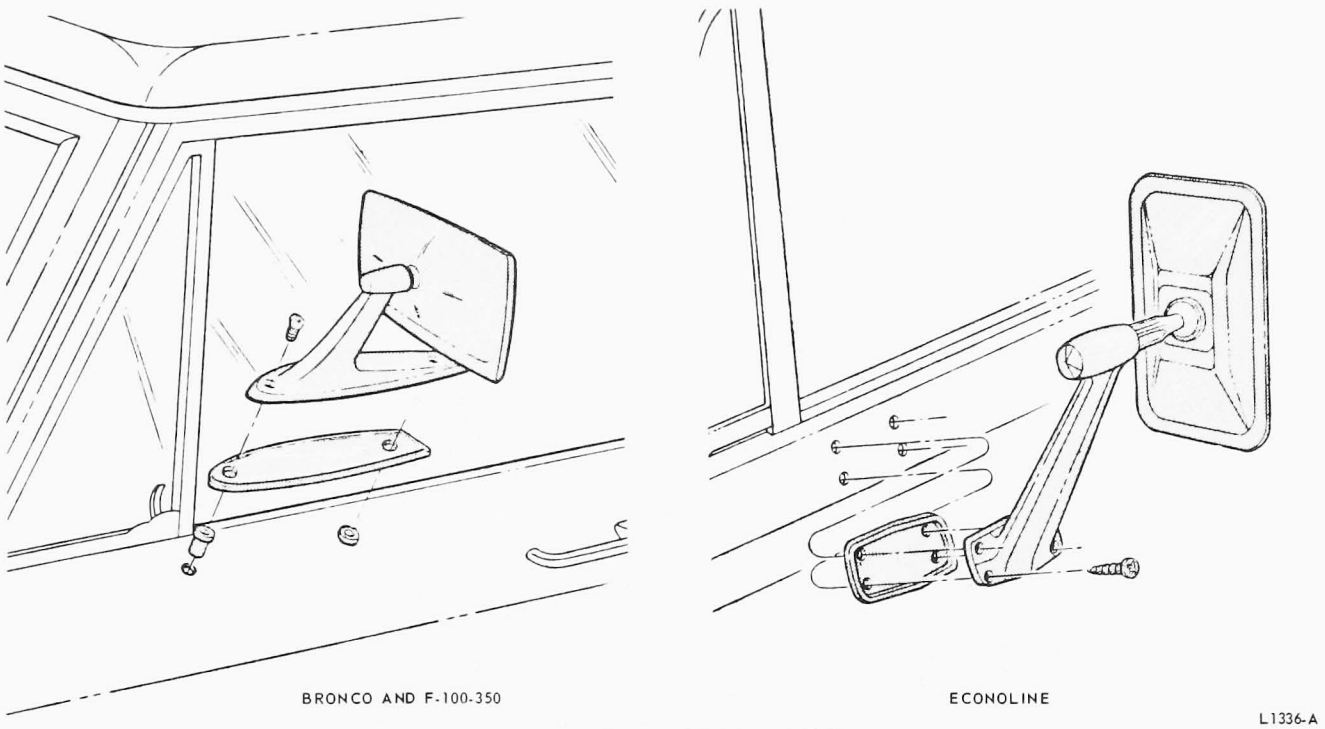

FIG. 2 Conventional Outside Mirror—Bronco, Econoline and F-100—F-350

actuator.

5. Remove the pull cord from the actuator and check the operation of the mirror.

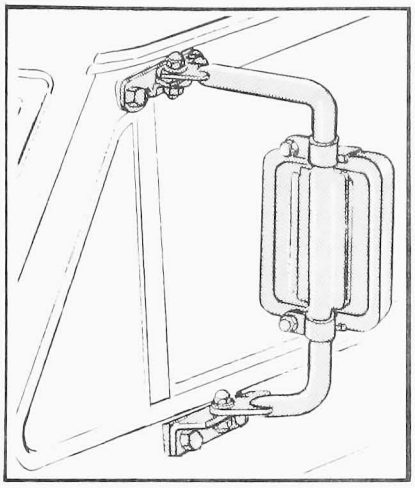

ECONOLINE WESTERN-TYPE SWING-LOCK

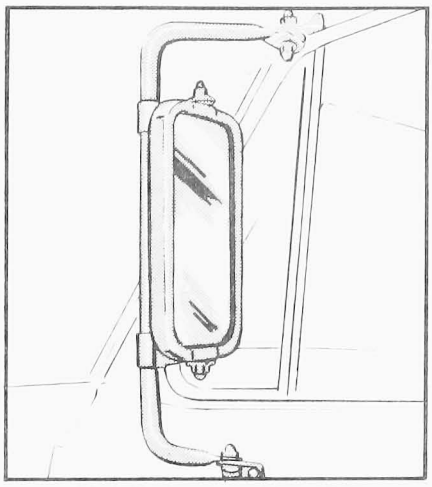

F-100-350 WESTERN-TYPE SWING-LOCK

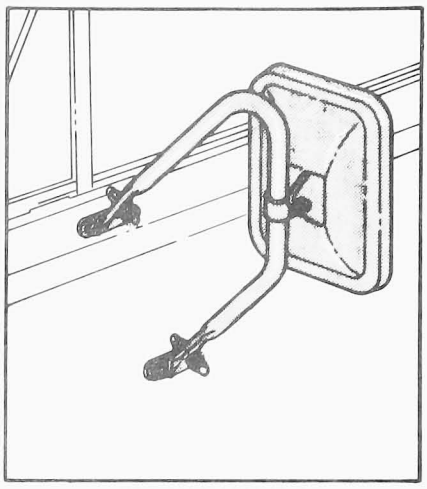

ECONOLINE LOW-MOUNT

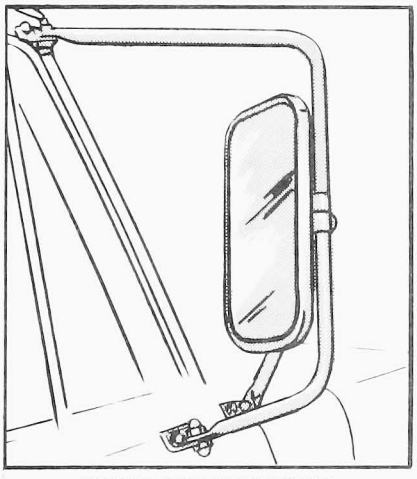

WESTERN-TYPE, FIXED CHROME FOR F-100-350

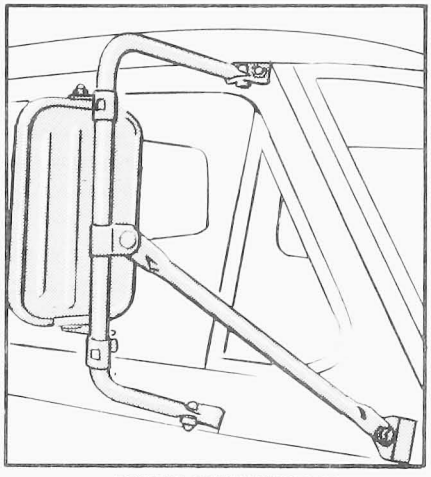

WESTERN-TYPE MIRROR FOR CAMPER SPECIAL PACKAGE

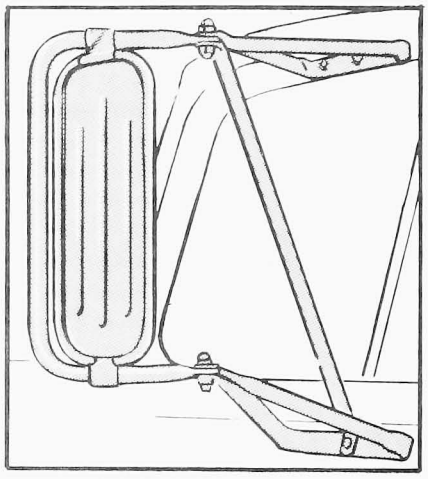

WESTERN-TYPE MIRROR FOR F-500-750

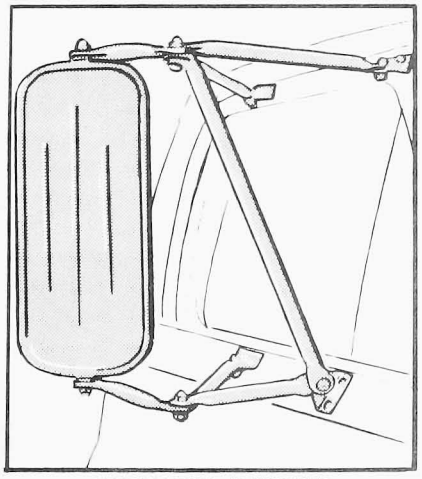

WESTERN-TYPE, ADJUSTABLE MIRROR FOR L-SERIES

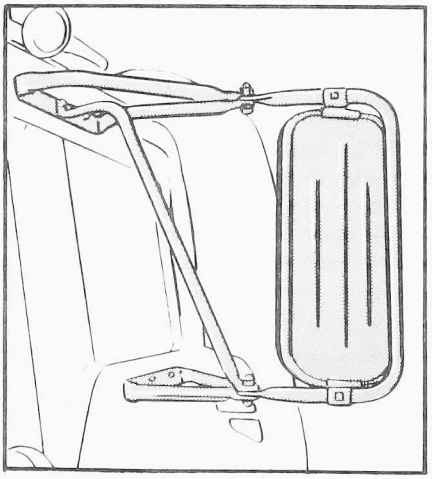

C-SERIES WESTERN-TYPE MIRROR

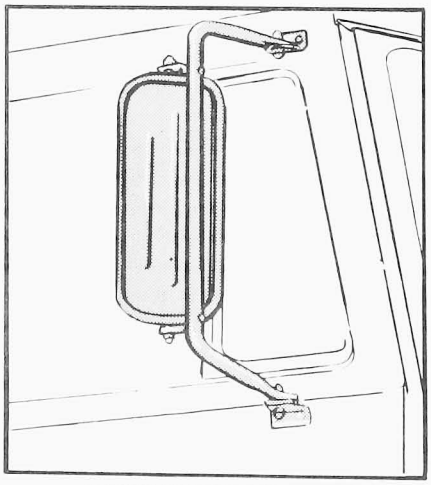

W-SERIES WESTERN-TYPE MIRROR

L1334-B

FIG. 3 Western Type Outside Mirrors

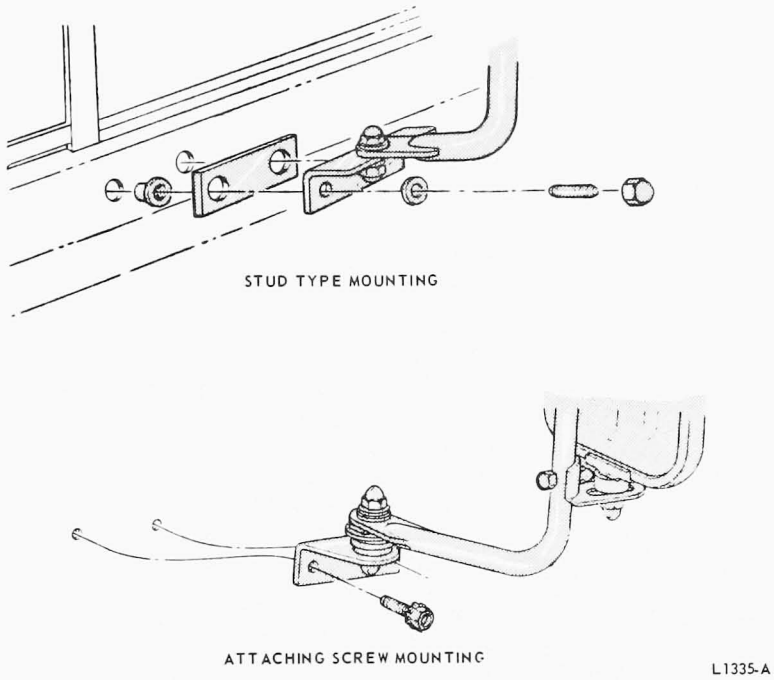

FIG. 4 Western Type Mirror—Mounting Bracket—Typical

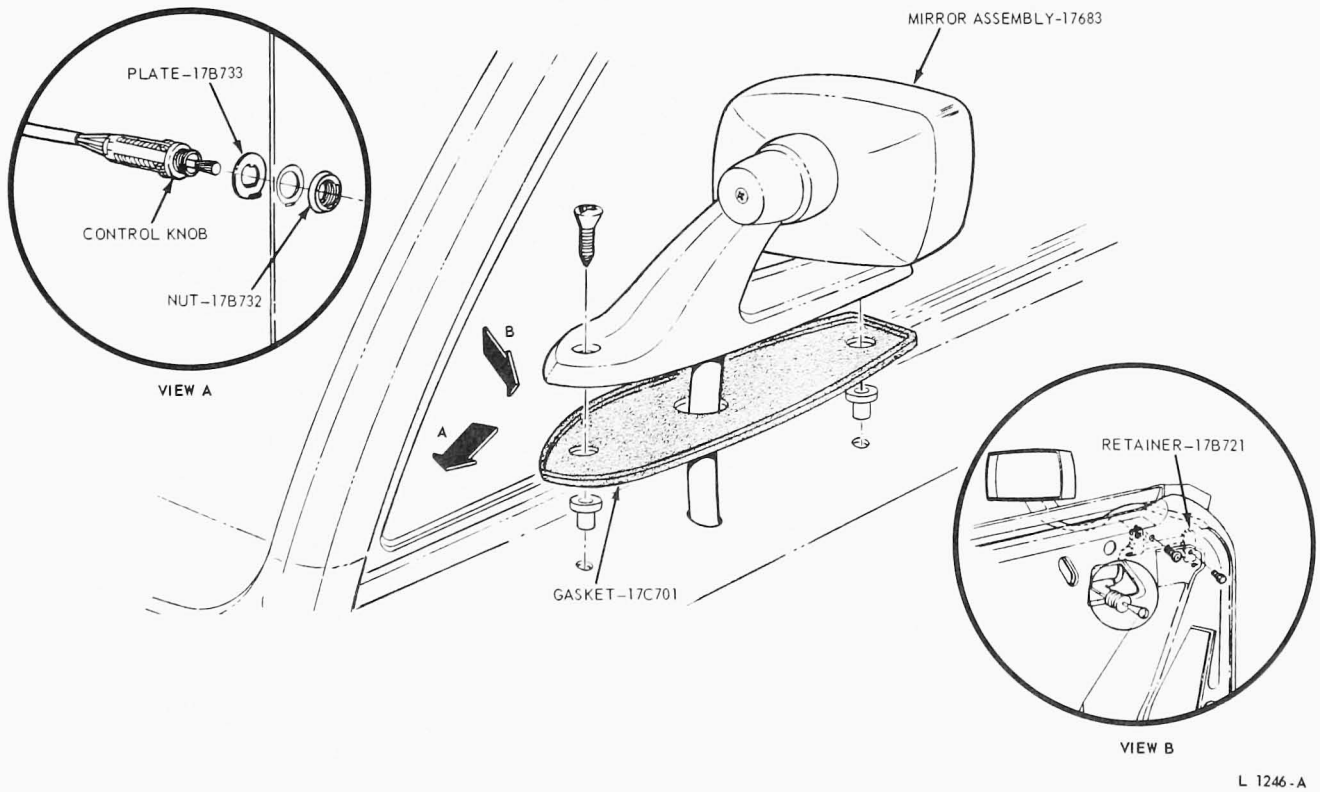

FIG. 5 Remote Control Rear View Mirror

PART 35-60 Windshield Wipers—Electric

COMPONENT INDEX	Page
ADJUSTMENTS	
Arm and Blade Assembly	60-06
DESCRIPTION AND OPERATION	
Wiper System	60-01
DISASSEMBLY AND ASSEMBLY	
Brush End Plate	60-10
Cover and Switch Assembly	60-10
Wiper Motor	60-11

COMPONENT INDEX	Page
REMOVAL AND INSTALLATION	
Pivot Shaft and Linkage Assembly	60-10
Wiper Blade Assembly	60-09
Wiper Blade Element	60-09
Wiper Control Switch	60-08
Wiper Motor	60-06
SPECIFICATIONS	60-11
TESTING	60-01

DESCRIPTION AND OPERATION

All trucks with hydraulic brakes are equipped with two-speed electric wiper motors. Trucks with air brakes are equipped with an air pressure operated motor.

Two independent two-speed motors are used on tilt-cab trucks. They are connected together and connected to the wiper control switch by an intermediate wiring harness. The quick-disconnect plug is a part of the wiring harness.

The two-speed, permanent magnet, three brush electric windshield wiper motor (excluding L-Series truck wiper motors) has a brush rigging that permits selection of low or high speed. When the control selector is in low position, the grounded brush and the white wire brush are used, and the motor operates at low speed. When the control selector is in high position, the grounded brush and the blue wire brush are used. Current by-passes a portion of the armature winding, causing the motor to run faster. When the control selector is moved to the park position, the motor will continue at low speed until the park switch lower contacts open, stopping the motor in the park position.

Intermittent Wipers

Optional intermittent wipers are available on F-100 through F-350 trucks. This system is a two-speed wiper system with an intermittent feature. For normal wiper operation, turn the wiper control knob to the right to any one of two detents (Low and High speed).

For intermittent operation of the wiper switch, rotate the wiper control knob to the left. The more the knob is rotated to the left, the longer the time interval between wiper blade sweeps.

The governor for the intermittent wiper system is mounted on the lower flange of the instrument panel below the wiper-washer switch.

TESTING

WIPER MOTOR CURRENT DRAW

EXCEPT L-SERIES

Disconnect the linkage from the motor and disconnect the electrical plug to test the motor on the vehicle. Connect the green lead from the test equipment to the battery positive (plus) post (Fig. 1). Connect the positive (red) lead from the tester first to the low speed connection and then to the high speed connections at the connector plug as shown. In either case, the current draw should not exceed 3 amperes.

L-SERIES

The windshield Wiper Motor Tests can be performed with the wiper motor installed in the vehicle with linkage disconnected or on the bench.

The motor terminals are too small to make the necessary test connections without using connector sleeves and wires between the motor terminals and the test equipment as shown in Fig. 2. The connector sleeves (available in Kit No. C4AZ-14294-B) should be crimped onto both ends of the wires.

Connect the positive (red) lead from the test equipment to the center terminal on the motor end plate, and connect the green lead from the tester to the battery positive post (Fig. 2). Connect a jumper wire from the battery negative post to the low speed terminal on the motor end plate and read the current draw. Move the jumper wire from the low speed terminal to the high speed terminal, and read the high speed current draw. In either case the current draw should not exceed 3.5 amperes. If the current draw does exceed 3.5 amperes, check the output arm and windlatch mechanism for binding or damage before replacing the motor.

CIRCUIT BREAKER TEST

The circuit breaker is located in the wiper control switch.

All pin terminal switches have a circuit breaker rating of 8 1/4 amps and

all blade terminal switches have a rating of 7 amps.

Two separate tests are necessary to check for correct circuit breaker operation.

Test 1

1. Before connecting the switch to the Rotunda volt-amp tester as shown in Fig. 3, short the tester leads together and adjust the current draw until it equals the circuit breaker rating.
2. Connect the switch to the tester as shown in Fig. 3. Leave the switch connected to the tester for ten minutes. The current reading on the ammeter should remain at the rated current. If the circuit breaker opens during the ten minutes, replace the wiper switch assembly.

Test 2

1. Short the tester leads together and adjust the current draw until it is twice the rated current.
2. Connect the switch as shown in Fig. 3. The current reading on the ammeter should drop to zero within 30 seconds. If it takes longer than 30 seconds for the circuit breaker to open (current reading drops to zero) replace the wiper switch assembly.

WIPER SWITCH CONTINUITY TEST

Check the continuity between the switch terminals as shown in Figs. 4 and 5. Either a self-powered test light or an ohmmeter can be used to test a standard two speed switch. An ohmmeter must be used to test a switch used with the intermittent wiper system.

To detect marginal operation of the switch, rotate the switch control knob while each reading is being taken.

If the switch does not exhibit continuity as shown in Figs. 4 and 5, or if poor continuity exists in any switch position, replace the switch.

WINDSHIELD WIPER INTERMITTENT GOVERNOR TEST

F-100 THROUGH F-350

If intermittent operation is unsatisfactory, first check the motor current draw and the control switch and all connecting wires for continuity. If the motor, switch and connecting wires are OK, replace the electronic governor.

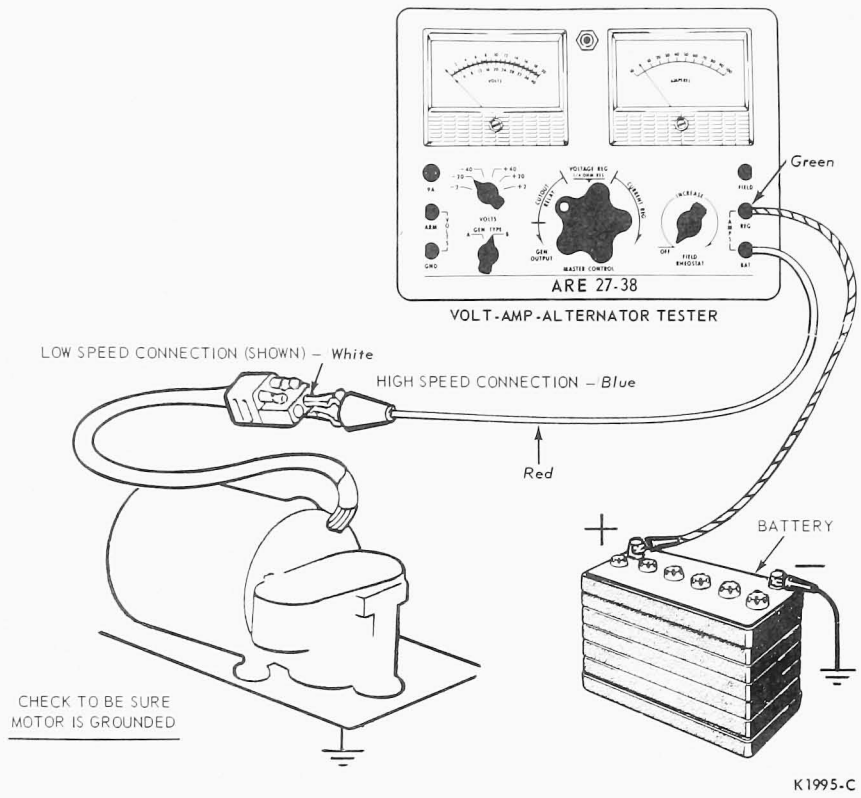

FIG. 1 Wiper Motor Current Draw Test

PAKING TEST—ELECTRIC

Stop the wiper system with the ignition switch so that the wiper blades are not in park position. Connect jumper wires as shown in Fig. 5. The wipers should not run more than one full cycle and then park. If the motor will not park or will not run to park position, replace the park switch. If the motor stops correctly check the windshield wiper manual control switch and the wiring for continuity.

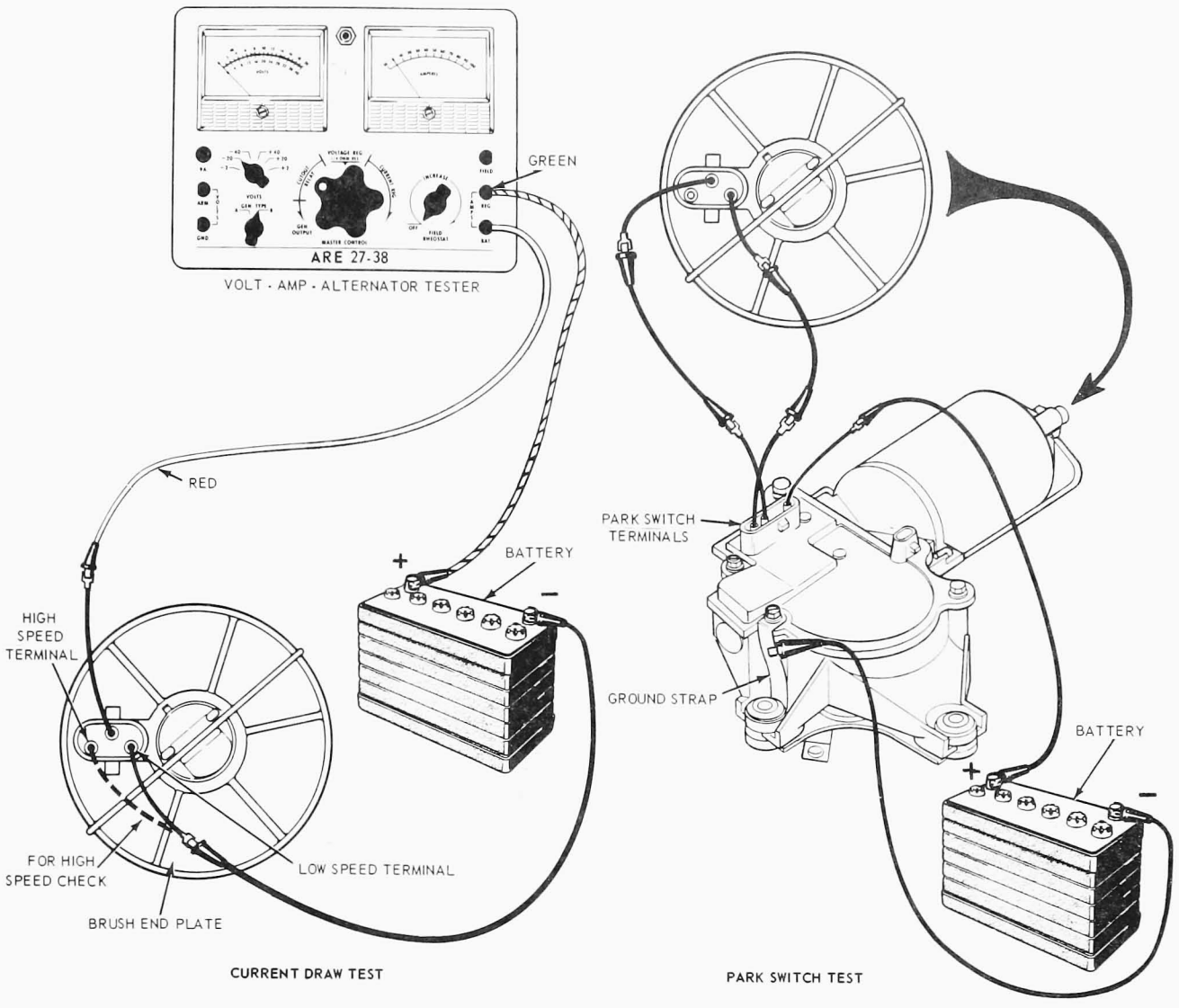

FIG. 2 Wiper Motor Tests

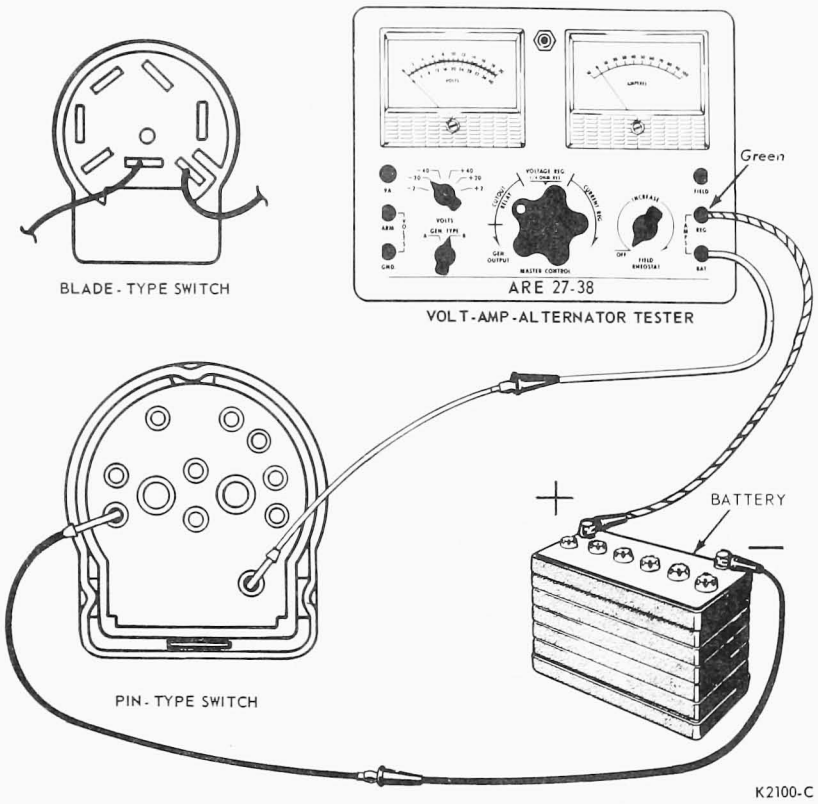

FIG. 3 Circuit Breaker Test

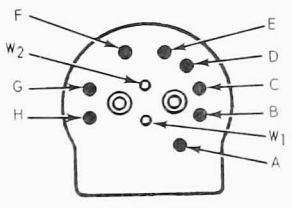

PIN TYPE SWITCH

SWITCH POSITION	CONTINUITY BETWEEN TERMINALS
OFF (PARK)	B-C
	A-H
	F-G
LOW	C-D
	A-G-H
HIGH	D-E
	A-G-H
WASH	W1-W2

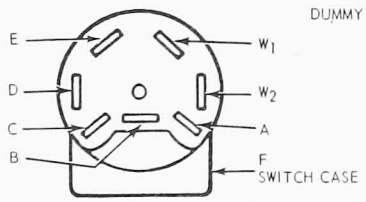

BLADE TYPE SWITCH – EXCEPT C-SERIES

SWITCH POSITION	CONTINUITY BETWEEN TERMINALS
OFF (PARK)	C-D
	A-B
LOW	A-B-C
HIGH	A-B-E
WASH	W1-W2

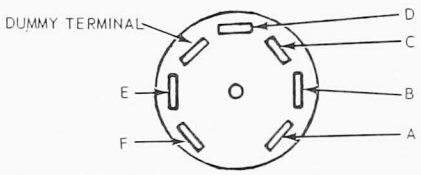

C-SERIES TRUCK

SWITCH POSITION	CONTINUITY BETWEEN TERMINALS
OFF (PARK)	A-B
	E-F
LOW	B-C-E
HIGH	C-D

K 2697-F

FIG. 4 Wiper Switch Continuity Test—(Except Lt. Truck)

INTERMITTENT SWITCH

SWITCH POSITION	CONTINUITY BETWEEN TERMINALS
OFF (PARK)	A-B D-E
LOW	A-B D-E-F
HIGH	D-E-F A-B-C
INTERMITTENT	63-763 A-B 28-56-57 D-E-F VARIABLE RESISTANCE BETWEEN D-E MIN. 100-900 ohms MAX. 5600-8400 ohms
WASH	W1-W2

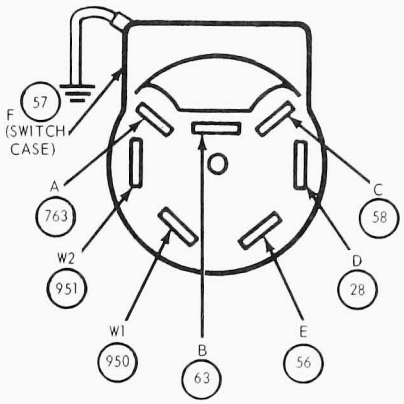

2-SPEED SWITCH

SWITCH POSITION	CONTINUITY BETWEEN TERMINALS
OFF (PARK)	C-D A-B
LOW	A-B-C
HIGH	A-B-E
WASH	W1-W2

K3025-A

FIG. 5 Wiper Switch Continuity Seat—F-100 through F-350

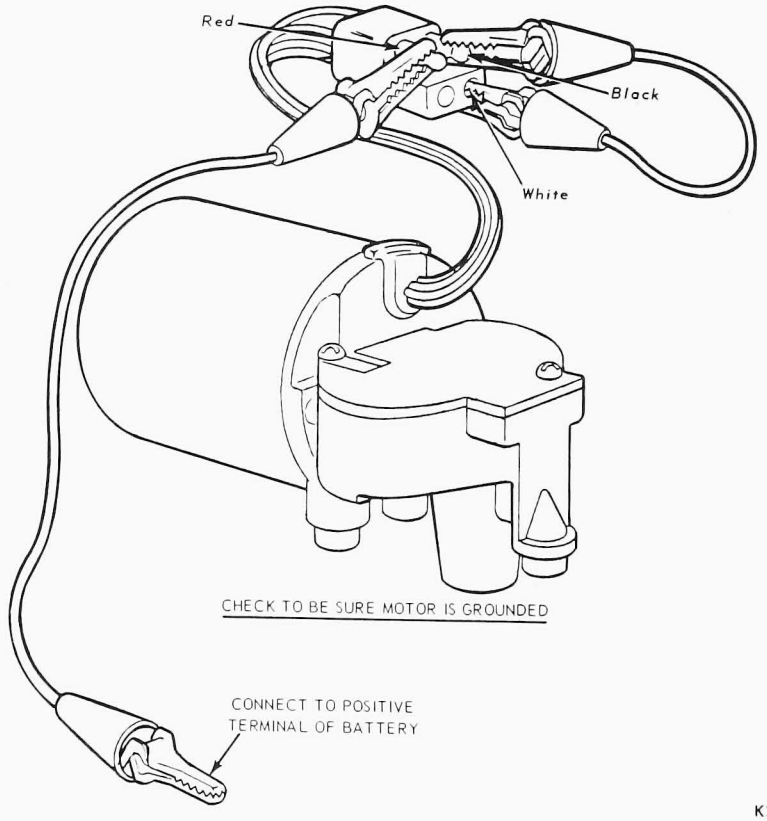

K2494-A

FIG. 6 Park Test—Except L-Series

ADJUSTMENTS

ARM AND BLADE ASSEMBLY

Remove the arm and blade assemblies from the pivot shafts. Turn on the wiper switch, allow the motor to move the pivot shafts three or four cycles, and then turn off the wiper switch. This will place the pivot shafts in park position.

Install the arm and blade assemblies on the pivot shafts to dimension X as shown in Fig. 7. Dimension X is the distance between the centerline of the blade saddle and the edge of the glass. The value of Dimension X for each vehicle is given in Fig. 8.

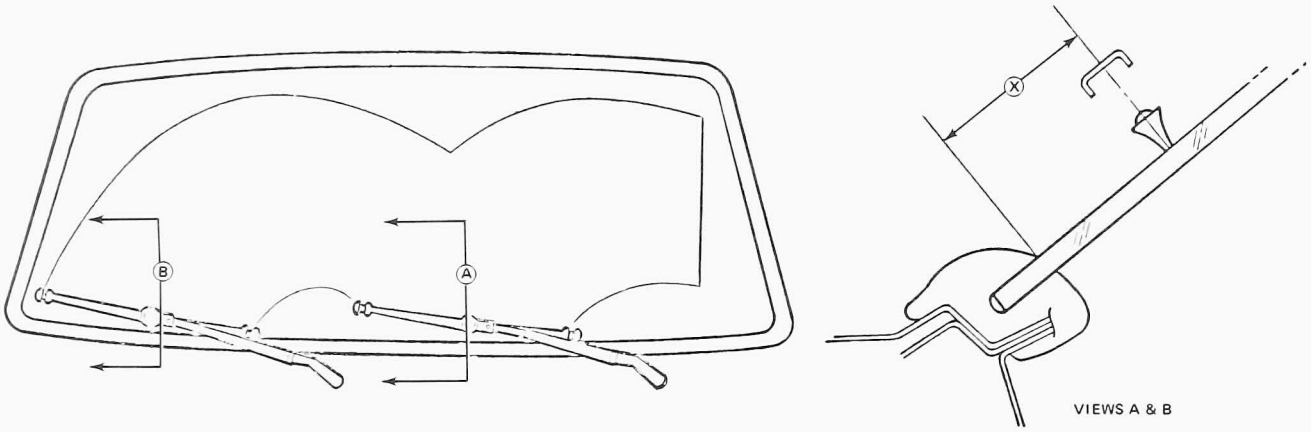

FIG. 7 Wiper Arm and Blade Adjustment

Vehicle	Dimension X (Inches)	
	Driver's Side	Passenger Side
C-Series (Para-Wipe)	1.75-2.75	1.75-2.75
C-Series	1.00-2.00	1.00-2.00
W-Series	1.00-2.50	1.00-2.50
L-Series	2.00-3.38	1.50-2.87
Econoline	2.50-3.50	2.50-3.50
Bronco (From Top)	0.50-1.25	0.50-1.25
F-Series	1.00-2.00	1.00-2.00

CK3042-A

FIG. 8 Wiper Arm and Blade Adjustment—X Dimension

REMOVAL AND INSTALLATION

WIPER MOTOR

BRONCO

The motor and bracket assembly is mounted on the left side of the windshield header. To remove the motor, it will be necessary first to remove the cover and disconnect the linkage arm and pivot shaft assembly from the motor drive arm by removing the retaining clip (Fig. 9). Disconnect the motor wires at the multiple connector. Remove the two bolts and nuts that attach the motor mounting bracket to the windshield header, and remove the bracket and motor assembly.

When installing the motor, tighten the motor bracket-to-windshield header bolts to torque of 48-72 in-lbs and tighten the nuts to 20-30 in-lbs. Then, install the cover.

C-SERIES

Removal

1. Remove one nut and arm and blade assembly.
2. Remove the ten wiper motor access cover screws from outside of the cab and remove cover.
3. Disconnect the wiper motor wires at the multiple connector under the cowl, and pull the connector plug and wiring out through the grommet hold along with the grommet.
4. Remove four bolts retaining the wiper motor and mounting bracket to the body and remove it from the vehicle.
5. Remove one clip and two nuts and remove the motor from the mounting bracket.

Installation

1. Position he motor to the mounting

bracket. Install two nuts and one clip.
2. Position the wiper motor and bracket assembly to the body and install four bolts. Tighten the bolts to a torque of 48-72 in-lbs.
3. Push the motor wiring and connector plug through the grommet hole and connect it to the multiple connector under the cowl.
4. Position the access cover to the front outer side of the cab and secure it with screws.
5. Install the wiper arm and blade assembly.
6. Check the operation of the motor.

F-100 THROUGH F-350

Removal

1. Disconnect the battery ground cable.
2. Remove the radio (if so equipped) as outlined in Part 35-02.
3. Remove the wiper motor bracket attaching bolts (Fig. 10).
4. Disconnect the wiper motor wires. Then, disconnect the wiper arm linkage from the motor shaft (Fig. 9).

Installation

1. Connect the linkage to motor and install motor bracket attaching bolts (Figs. 9 and 10). Tighten bolts to 8-16 ft-lb torque.
2. Connect wiper motor wires.
3. Install radio as outlined in Part 35-02.
4. Connect battery cable and check wiper motor operation.

ECONOLINE

1. Disconnect the battery ground cable.
2. Disconnect the wiper motor wires at the harness multiple connector or stud terminal.
3. Remove the clip that retains the motor drive arm to the linkage mounting arm and pivot shaft assembly (Fig. 9).
4. Remove the wiper motor bracket attaching bolts and remove the motor and bracket from the vehicle. Then, remove the motor from the bracket.
5. Check the new motor to be sure it is in the park position. Then, install the motor on the mounting bracket.
6. Remove the drive arm from the old motor and install it on the new motor in the park position (in the opposite direction from the ground strap).
7. Install the motor and bracket on the dash panel.
8. Connect the linkage mounting arm and pivot shaft assembly to the motor drive arm and install the retaining clip.
9. Connect the motor wires to the harness or stud terminal and the ground cable to the battery. Then check the operation of the wipers.

L-SERIES

Disconnect the battery ground cable.

Remove the wiper arm and blade assemblies from the pivot shafts. Remove the cowl grille and disconnect the linkage drive arm from the motor output arm crankpin by removing the retaining clip. Disconnect the two (push-on) wire connectors from the motor.

From the engine side of the dash panel, remove the three bolts that retain the motor to the dash and remove the motor. If the output arm catches on the dash during removal, rotate the motor body so that the output arm will clear the opening in the dash.

An output shaft seal of moulded rubber is installed on the casting neck below the output arm. A 5/8 inch thick expanded rubber flat seal is used for sealing the motor to the body sheet metal.

If the motor is being replaced, transfer the output arm and moulded rubber shaft seal to the new motor and

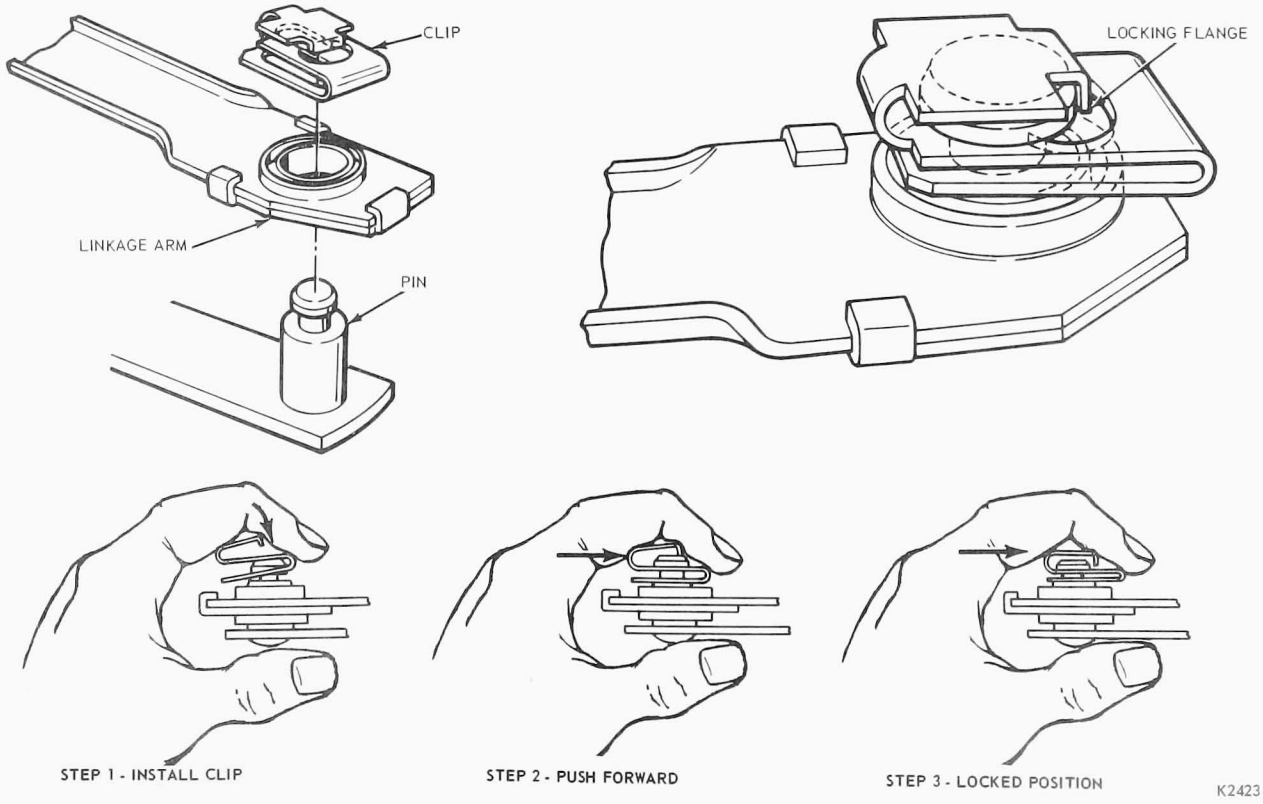

FIG. 9 Wiper Arm Connecting Clip Installation—Bronco, Econoline, F-and L-Series

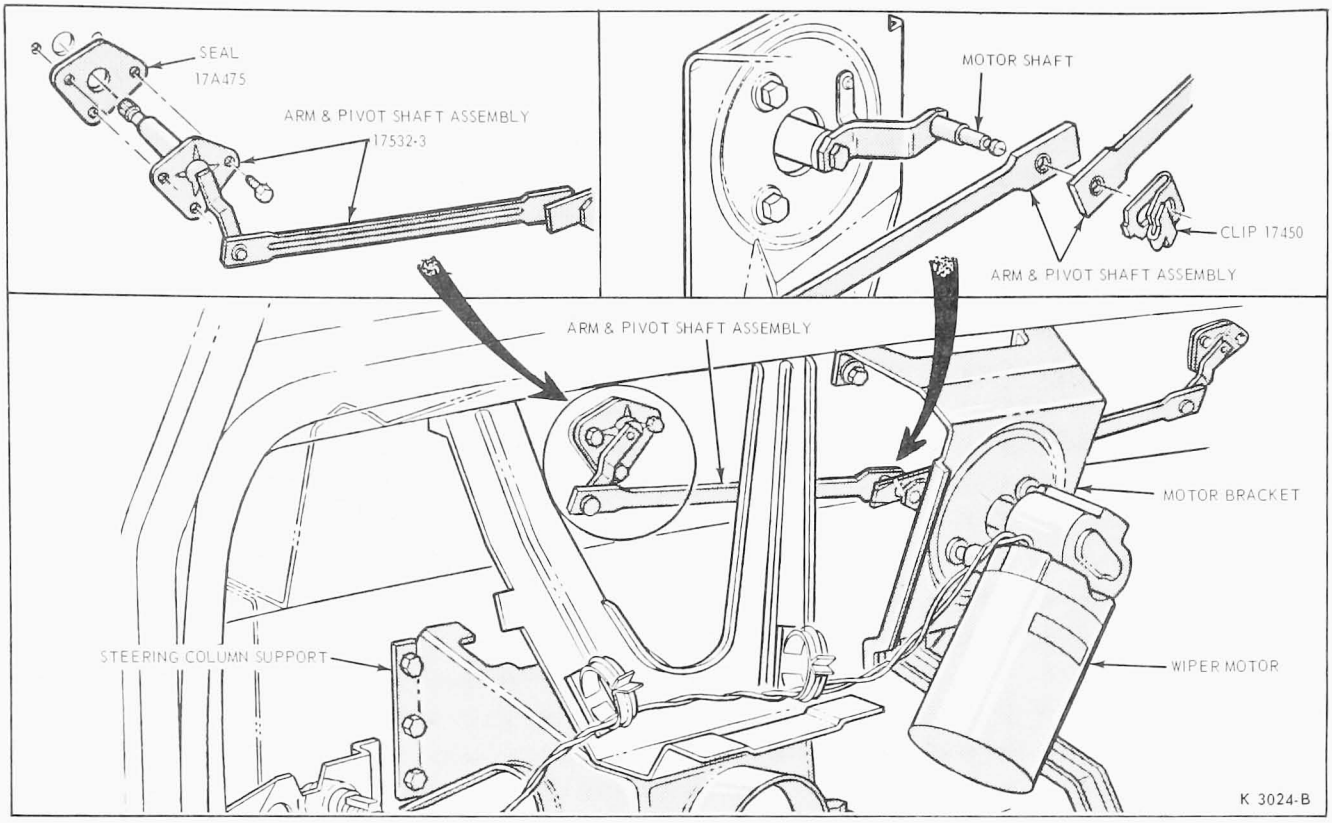

FIG. 10 Windshield Wiper Motor Installation—F-100 Through F-350

then install the flat expanded rubber seal before installing to the body sheet metal.

WIPER CONTROL SWTICH

EXCEPT ECONOLINE

1. Disconnect the battery cable.
2. Remove the wiper switch knob, bezel nut, and bezel.
3. Pull out the switch from under the instrument panel. Disconnect the plug connector from the switch and remove the switch.
4. Position the switch and connect the plug connector.
5. Position the switch in the instrument panel and install the bezel, bezel nut, and knob.
6. Connect the battery cable and check the operation of the switch.

ECONOLINE

1. Disconnect a battery cable at the battery.
2. Loosen the set screw on the wiper control knob, and remove the knob.
3. Remove the wiper control to instrument panel retaining nut, using tool T56L-700A.
4. Remove the wiper control from the instrument panel, and disconnect the wires at the wiper control.
5. Connect the wires to the replacement wiper control.

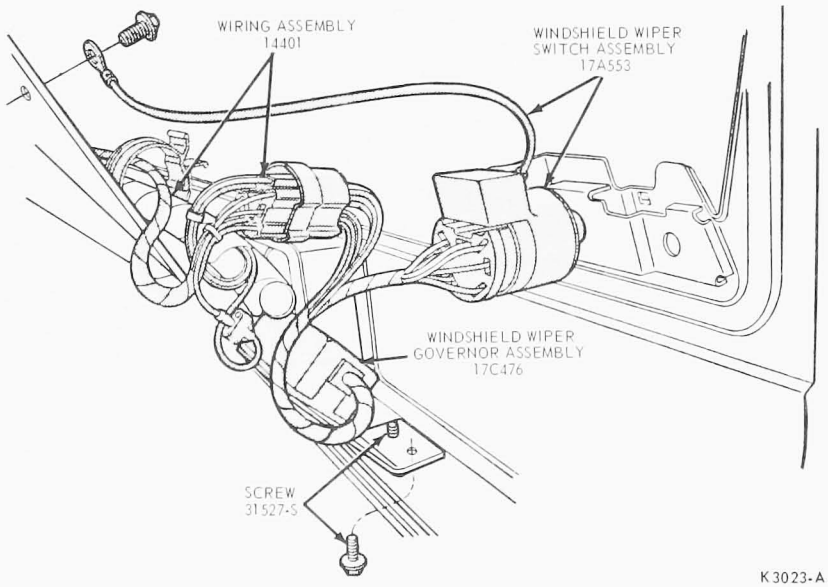

FIG. 11 Windshield Wiper Intermittent Governor

6. Position the wiper control and bezel to the instrument panel and install the retaining nut.
7. Place the control knob on the shaft and tighten the set screw.
8. Connect the battery cable, and check the operation of the wipers.

INTERMITTENT GOVERNOR

F-100 THROUGH F-350

1. Disconnect the wire connectors from the governor.
2. Remove the two governor attaching

screws (Fig. 11), and remove the governor.
3. Position the governor to the instrument panel flange, and install the two attaching screws.
4. Connect the wire connectors, and check the operation of the wiper system.

BLADE ASSEMBLY TO WIPER ARM

Wiper blades are used from two different manufacturers. We will use the first letter of the manufacturers trade name to indicate the type of blade.

T and A blades come in two types. With a bayonet type, the blade saddle slides over the end of the arm and is engaged by a locking stud. With the bottom type, a screw and nut is used to retain the blade on the arm.

BAYONET TYPE

To remove a T type blade, press down on the arm to unlatch the top stud. Depress the tab on the saddle (Fig. 12) and pull the blade from the arm.

To remove an A type blade, press inward on the tab (Fig. 13) and pull the blade from the arm.

To install a new blade assembly, slide the blade saddle over the end of the wiper arm so that the locking stud snaps into place.

RUBBER ELEMENT TO WIPER BLADE

The rubber element in all blades can be replaced.

A-TYPE

To remove, depress the latch pin and slide the element out of the yoke jaws (Fig. 14).

To install, slide the element through the yoke jaws and insert the blade frame assembly into the slots of the yoke jaws.

T-TYPE

To remove, squeeze the latch lock release and pull the element out of the lever jaws (Fig. 14).

To install, insert the new element through each of the lever jaws. Be sure the element is engaged in all of the lever jaws.

If the arm or blade assembly is bent or distorted, replace the complete blade assembly.

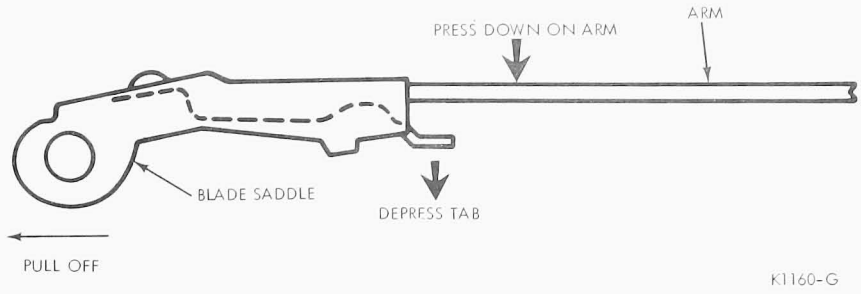

FIG. 12 T Blade—Bayonet Type Removal

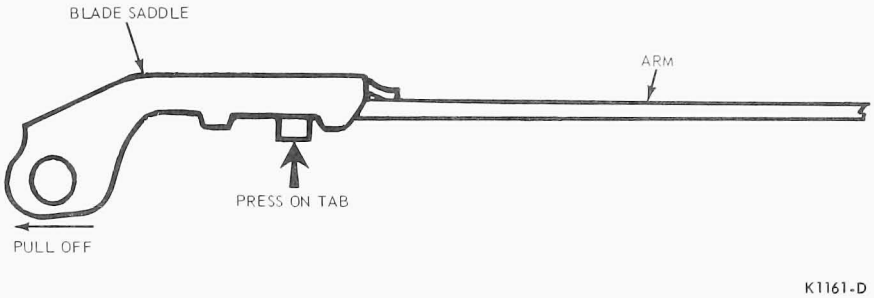

FIG. 13 A Blade—Bayonet Type Removal

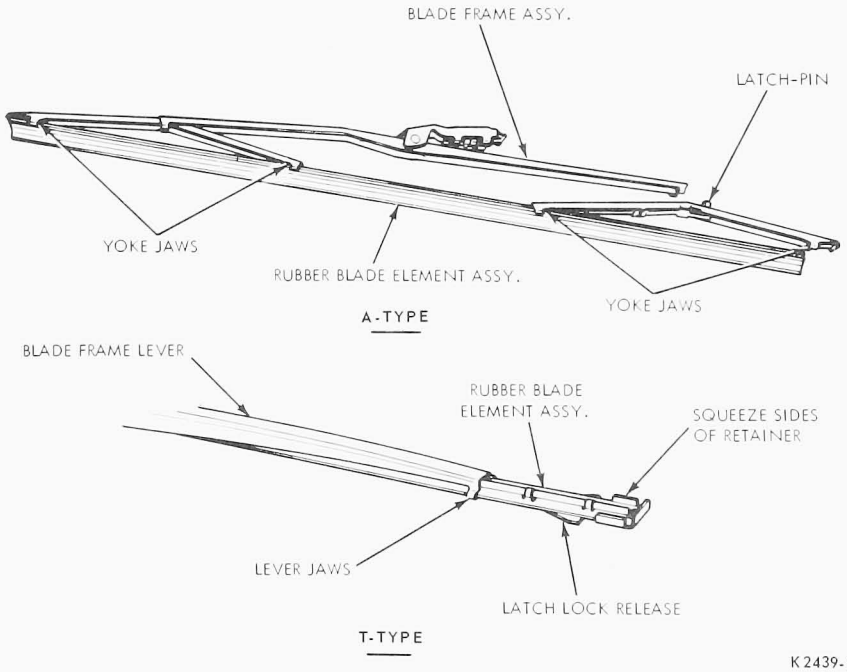

FIG. 14 Rubber Element Replacement

PIVOT SHAFT AND LINKAGE

BRONCO

Remove the windshield wiper arm and blade assemblies from their pivot shafts. Disconnect the linkage arm from the motor drive arm by removing the retaining clip. THE RIGHT AND LEFT PIVOT SHAFT ASSEMBLIES ARE EACH RETAINED TO THE WINDSHIELD HEADER BY TWO MOUNTING SCREWS and OCTAGONAL NUT. Remove these mounting screws and nut, and remove the pivot shafts and linkage as an assembly.

ECONOLINE

1. Remove the wiper blade and arm assembly from the pivot shaft.
2. Working under the instrument panel from inside the vehicle, remove the six screws retaining the pivot shafts.
3. Remove the retaining clip that secures the linkage to the wiper motor arm and remove the linkage and pivot shafts from the vehicle.
4. Position the pivot shafts in the mounting holes on the front cowl panel. Secure the linkage to the motor arm with the retaining clip.
5. Install the six screws retaining the pivot shafts to the cowl.
6. Install the wiper arm and blade assemblies to the pivot shafts and check the operation of the wipers.

F-SERIES

Removal

1. Open the hood and disconnect the battery ground cable. Remove the arm and blade assemblies from the pivot shafts.
2. Reach under the instrument panel and disconnect the speedometer cable from the rear of the instrument cluster.
3. Remove the instrument cluster bezel.
4. Loosen the three bolts retaining the wiper motor bracket to the cowl. This will allow access between the cowl panel and the link assembly.
5. Remove the clip retaining the motor drive arm to the link assemblies (Fig. 9).
6. Through the cluster bezel opening, remove the retaining bolts from the left pivot assembly. Remove the left pivot and link assembly from under the instrument panel.
7. Remove the glove box assembly.
8. Remove the three bolts retaining the right pivot and link assembly to the cowl panel.
9. Disconnect the right link assembly from the drive arm and remove the right pivot and link assembly.

Installation

1. Place gaskets on the pivot shafts and position the shafts to the cowl panel and install the retaining bolts.
2. Install the glove box assembly.
3. Position the link assemblies to the motor drive arm and install the retaining clip (Fig. 9).
4. Tighten the bolts retaining the motor bracket to the cowl.
5. Install the wiper arm and blade assemblies (Fig. 8).
6. Position and install the instrument cluster bezel.
7. Connect the speedometer cable.
8. Connect the battery ground cable and close the hood and check the operation of the wipers.

L-SERIES

Removal

1. Open the hood and disconnect the battery ground cable.
2. Reach under the instrument panel and disconnect the speedometer cable from the rear of the instrument cluster.
3. Remove the instrument cluster.
4. Loosen the three bolts retaining the wiper motor to the mounting bracket. This will allow access between the cowl panel and the link assembly.
5. Remove the clip retaining the motor drive arm to the link assemblies (Fig. 9).
6. At the outer side of the cowl, remove the pivot shaft retaining nut from the left pivot shaft. Remove the left pivot and link assembly through the cluster opening.
7. Remove the glove box assembly.
8. At the outer side of the cowl, remove the pivot shaft retaining nut from the right pivot shaft.
9. Disconnect the link assembly from the drive arm and remove the pivot and link assembly.

Installation

1. Position the right pivot shaft to the cowl panel and install the retaining nut from outside. Tighten the nuts to a torque of 75-100 in-lbs. Slide the right link assembly onto the motor drive arm.
2. Through the cluster opening, position the left pivot shaft to the cowl panel and install the retaining nut from the outside. Tighten the nut to a torque of 75-100 in-lbs. Slide the left link assembly onto the motor drive arm, and install the retaining clip (Fig. 9).
3. Install the glove box assembly.
4. Tighten the bolts retaining the motor bracket to the cowl.
5. Install the wiper arm and blade assemblies.
6. Position and install the instrument cluster assembly.
7. Connect the speedometer cable.
8. Connect the battery ground cable and close the hood and check the operation of the wipers.

DISASSEMBLY AND ASSEMBLY

The wiper motor is not serviced in a complete assembly or in individual parts, but in kits of the major sub-assemblies. Removal and installation procedures are given here for the kits.

COVER AND SWITCH ASSEMBLY

L-SERIES

Remove the four cover retaining screws to remove the assembly. Replace with the appropriate kit. Be sure to reassemble the ground strap under the cover screw. Use the new screws supplied with the kit and tighten to 15-25 in-lbs. torque.

BRUSH END PLATE

L-SERIES

Carefully observe the original position of the bale retainer and pry it off with a screwdriver. Remove the end plate and plug. Replace it with the appropriate kit.

When installing the end plate, use a fine wire probe through the hub opening to position the brushes on the commutator. Rotate end plate to position the key in the notch and assemble the plug. Reinstall the bale retainer carefully with a screwdriver to avoid overbending.

WIPER MOTOR

EXCEPT L-SERIES

Disassembly

1. Remove the gear cover retaining screws, ground terminal and cover (Fig. 15).
2. Remove the idler gear by pressing shaft with retainer out of the motor housing.
3. Remove the motor through bolts, motor round case, switch terminal insulator sleeve, and armature. Do not pound the motor case magnet assembly as the ceramic magnets may be damaged.
4. Mark the position of the output arm with respect to the output shaft for assembly. Remove the output arm retaining nut, output arm, wave washer, flat washer, O-ring, leaf spring, output gear/shaft assembly, and parking switch lever and parking switch lever plate.
5. Remove the brushes, bush springs, and wire harness.
6. Remove the brush plate and switch assembly, and remove the switch contact to parking lever pin from the gear housing.

Assembly

It is essential that the idler gear shaft with the push-nut be reset to the original, proper depth in the gear housing.

1. Place the housing on a flat surface with the inside of the housing facing up.
2. Position the parking switch lever and lever plate with the cam rider pointing toward the gear housing output shaft hole.
3. Apply a film of Sun Prestige grease to the output gear teeth and shaft bearing surface. Insert the shaft in the bearing. Make certain that the parking switch lever is clear of the cam and gear assembly.
4. After installing idler gear on shaft insert shaft through park lever and plate. Use a drift and hammer to lightly tap the gear and pinion shaft to proper dept. (Do not allow push-nut to put a pre-load on gear. A .001-.007 in clearance is required.)
5. Position the brush springs and brushes in the holders and wrap wire around them to hold them in the fully retracted position. Push the insulated brush connector into the switch terminal.
6. Place the switch contact to parking lever pin in the gear housing. Position the brush plate assembly to the housing and install the retaining screws.
7. Apply Sun Prestige grease to the ball bearing in the end of the armature shaft. Position the armature shaft in the gear housing and remove the brush retracting wires.
8. Holding the armature in position, install the motor case and magnet assembly, and through bolts. Align indicator marks on motor case and gear box housing before inserting through bolts.
9. Apply Sun Prestige grease to the worm gear and pinion and idle gear. Install end play spring in housing.
10. Apply a generous amount of Sun Prestige grease to the area around the end of the armature shaft. Install the gear housing cover.

Cleaning and Inspection

1. Clean the gear housing of all old grease. Do not allow any cleaning fluid to contact the armature shaft and output shaft bearings.
2. Wipe all other parts with a clean cloth.
3. Inspect the gear housing for cracks or distortion. Replace a cracked or distorted housing.
4. Check all shafts, bushings, and gears for scored surfaces. Replace damaged parts, and add new grease to the housing and gears.

SPECIFICATIONS

ELECTRIC WINDSHIELD WIPER MOTOR AND SWITCH TEST CURRENT LIMITS

Model Application	Motor Current Draw Test	Switch Low Current Pass Test	Switch High Current Pass Test
Except L-Series	2.5 amperes	7 amperes	14 amperes
L-Series	3.5 amperes	8.25 amperes	16.5 amperes

CK2501-D

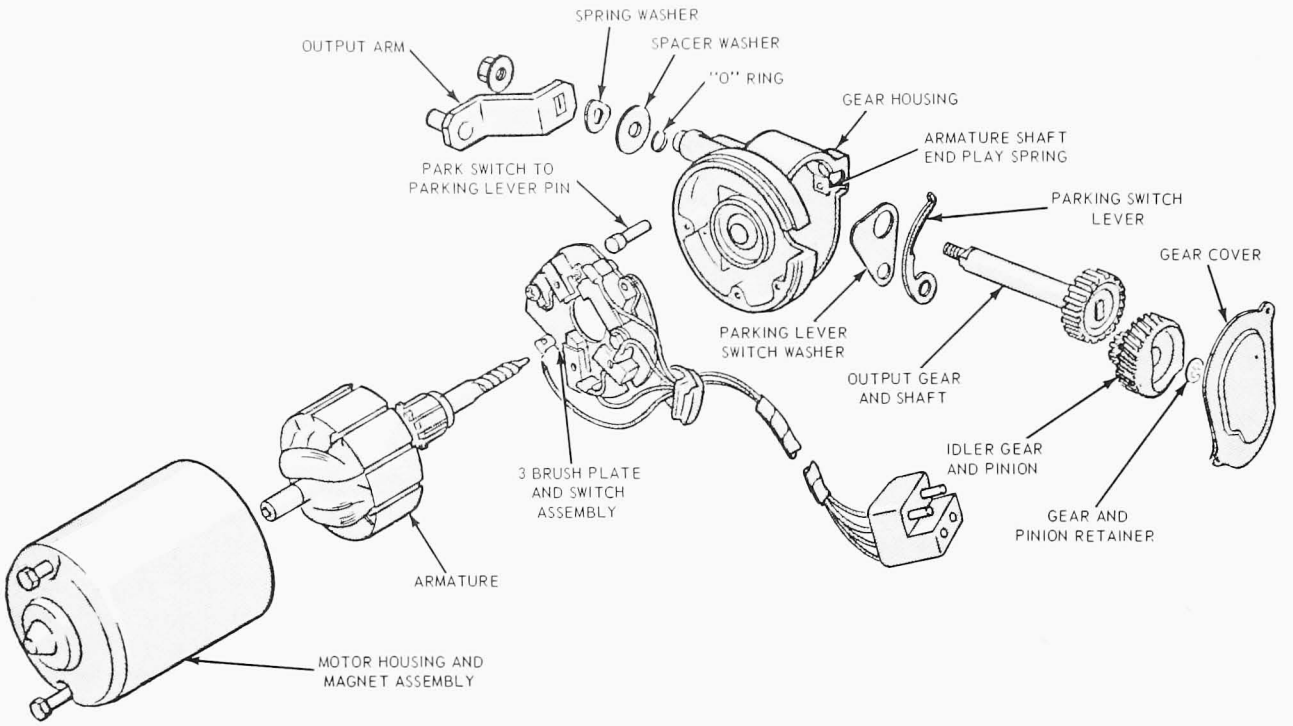

FIG. 15 Disassembled Wiper Motor

PART 35-63 Windshield Wipers—Air

REMOVAL AND INSTALLATION

WIPER MOTOR

L-SERIES

Removal

1. Open two air tank pet cocks to allow air pressure in the system to exhaust.
2. Disconnect two plastic air lines from the wiper motor.
3. Remove the clip retaining two pivot shaft links to the wiper motor.
4. Remove the two nuts retaining the wiper motor to the mounting bracket (Fig. 1).
5. Transfer the fittings.

Installation

1. Position the motor to the mounting bracket. Install the two retaining nuts.
2. Position the arms to the motor and install the retaining clip.
3. Connect two nylon air lines to the motor.
4. Close the two air tank pet cocks.
5. Start the engine and check the wiper operation.

C-SERIES

Removal

1. Exhaust the air pressure from the air system.
2. Remove the wiper motor access cover.
3. Disconnect the air line from the wiper motor (Fig. 2).
4. Disconnect the wiper drive linkage and wiper motor control cable from the motor (Fig. 2).
5. Remove the wiper motor attaching screws and remove the wiper motor.

Installation

1. Position the wiper motor to the vehicle and install the attaching screws.
2. Connect the wiper drive linkage and the air line to the wiper motor (Fig. 2).
3. Connect the wiper motor control cable to the motor.
4. Move the motor drive lever to the extreme position as shown by arrow A in Fig. 2. Keep the drive lever in that position. Then, force the cable housing in the direction of arrow B (Fig. 2) until a positive stop is felt.
5. Release the cable housing but continue to hold the drive lever in the direction of arrow A. Then, tighten the cable housing retaining screw.
6. Check the operation of the wiper motor. If the motor continues to operate when the control is in the OFF position, back-off the control screw (Fig. 2) until the condition is corrected.
7. Install the wiper motor access cover.

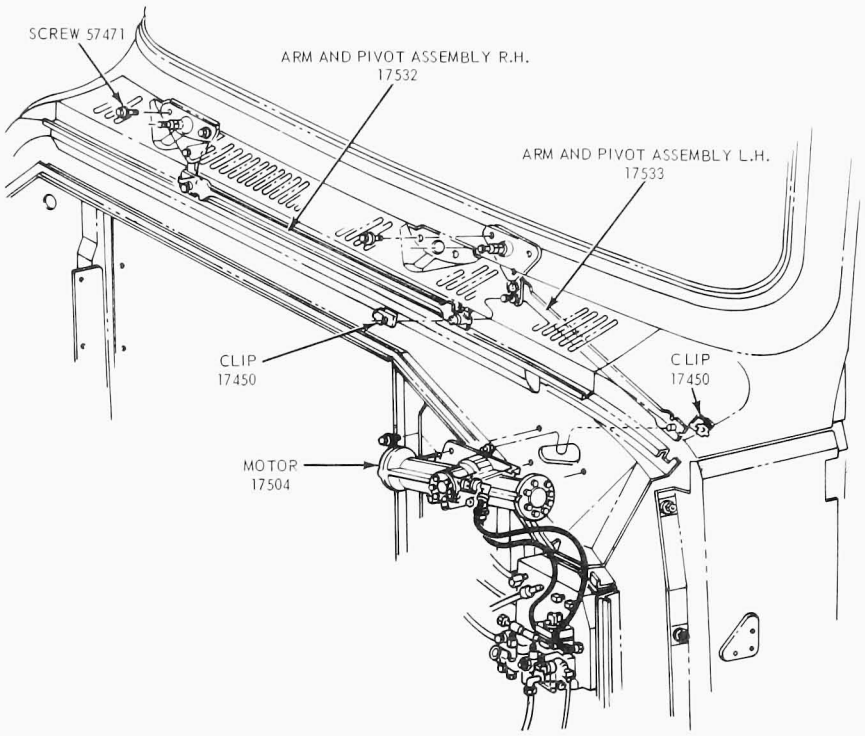

FIG. 1 Air Wiper—L and C-Series

W-SERIES

Removal

1. Open the air tank pet cocks to allow air pressure in the system to exhaust it.
2. Remove the arm and blade assembly retained by a nut and washer.
3. Remove the adapter with the use of a puller.
4. Remove the rubber boot, nut and washer.
5. Remove the cover from the front outside of the cab secured by four screws (Fig. 3).
6. Remove two mounting bolts and disconnect three rubber vacuum lines and remove the motor.
7. Transfer the mounting bracket.
8. Transfer the two fittings.

Installation

1. Connect the three vacuum hoses. Position the motor and bracket assembly to the cab and install the two bolts.
2. Install the cover plate with four screws.
3. Install the washer nut and rubber boot to the shaft.
4. Tap the adapter on the shaft.
5. Install the wiper arm, blade, washer and nut.

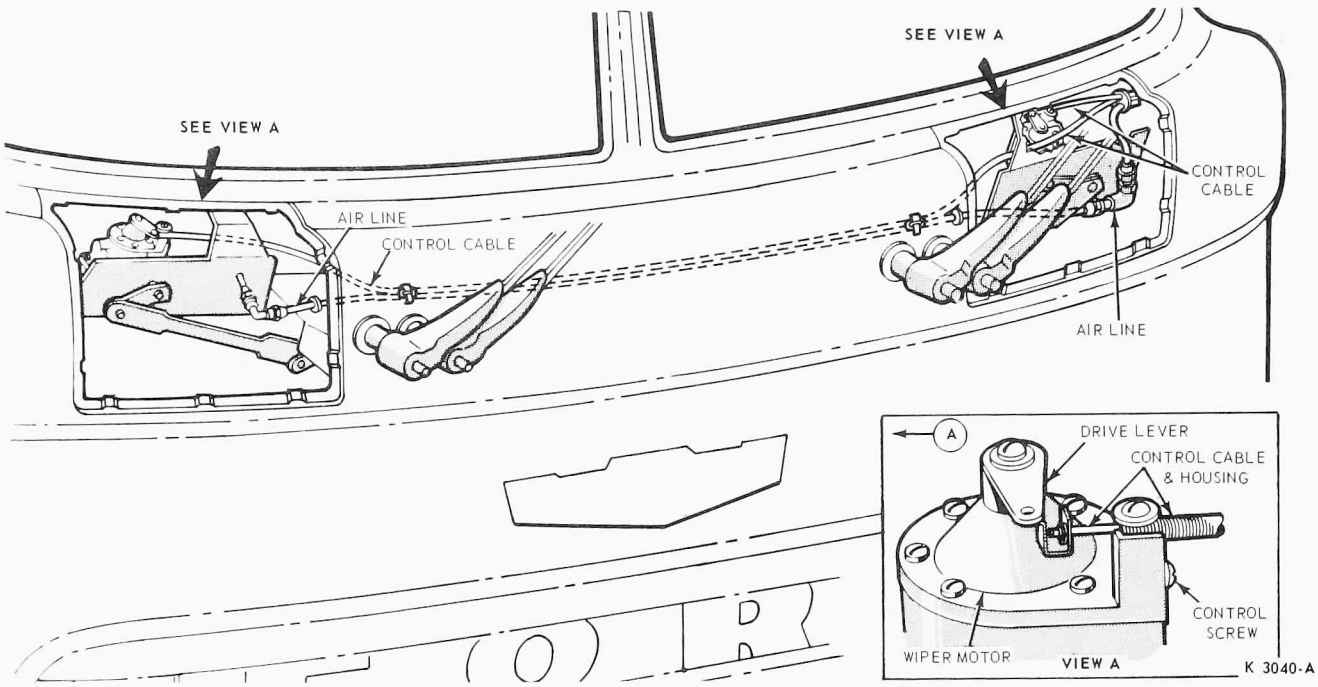

FIG. 2 Air Wipers—C-Series

6. Close the air tank pet cocks.
7. Start the engine and check the wiper operation.

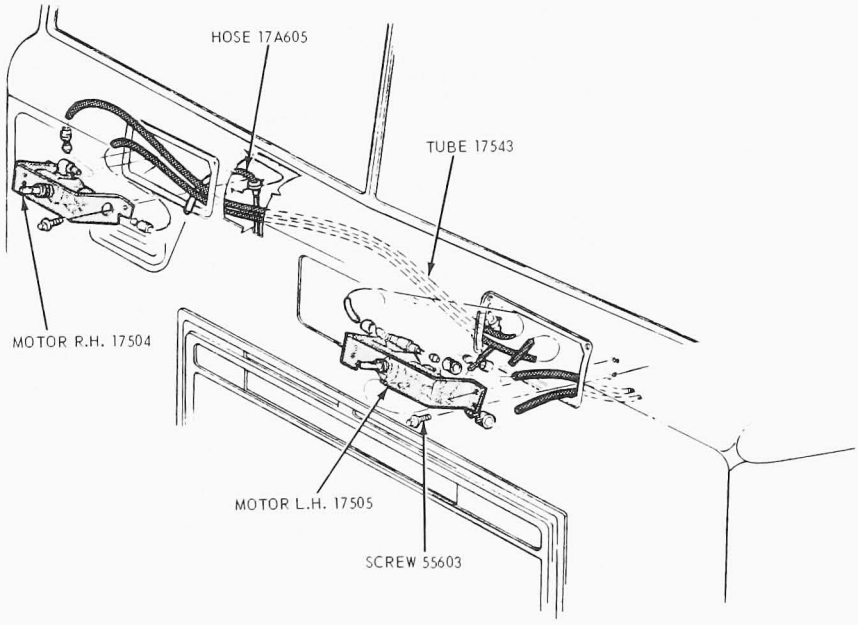

FIG. 3 Air Wiper W-Series

PART 35-70 Windshield Washers

DESCRIPTION AND OPERATION

WASHER SYSTEM—ELECTRIC

The electric windshield washer system consists of an instrument panel control switch, integral with the wiper control switch, reservoir and motor assembly and the necessary hoses, nozzles and attaching parts.

WASHER SYSTEM—MANUAL

The manual windshield washer system consists of a foot operated pump, reservoir and the necessary hoses, nozzles and attaching parts.

TESTING

WASHER PUMP CURRENT DRAW TEST

Attach the leads of the Volt-Amp Tester as shown in Fig. 1. The current draw should not exceed four amps while the washer pump is pumping fluid.

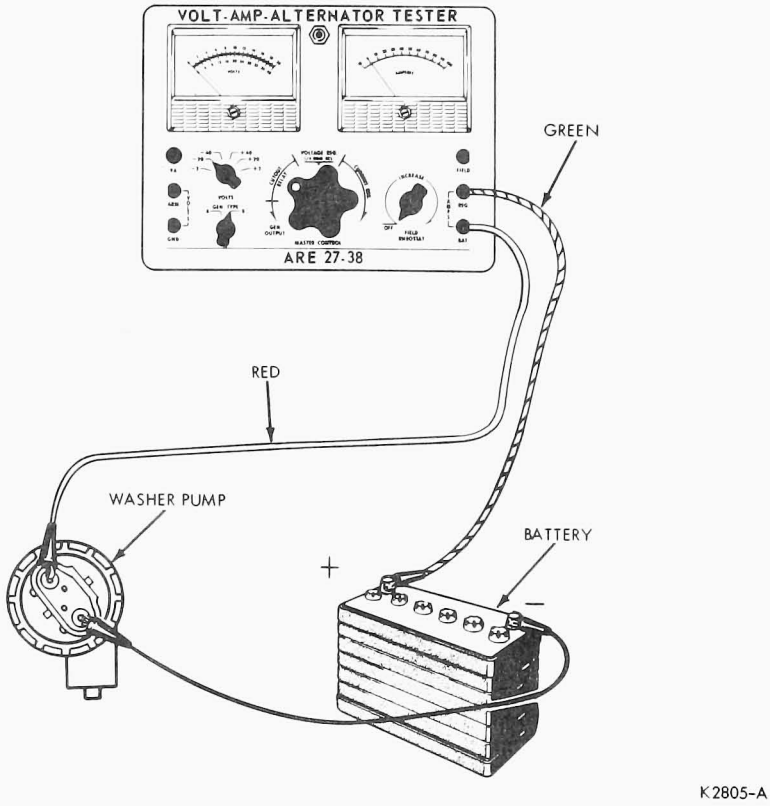

FIG. 1 Washer Pump Current Draw Test

ADJUSTMENTS

WASHER NOZZLE

F-SERIES

The adjustment of either washer nozzle can be accomplished by bending the nozzle tube to provide desired windshield washer fluid distribution.

C-SERIES

Use a 0.015 inch diameter pin to adjust both nozzles on each washer jet.

L-SERIES

Rotate adjusting screw with Phillips screw driver to obtain the desired spray pattern.

ECONOLINE AND W-SERIES

Carefully turn the nozzle with a blade screwdriver to obtain the desired spray pattern.

BRONCO

The Bronco windshield washer nozzles are not adjustable.

WASHER PUMP—ELECTRIC

To remove the electric windshield washer reservoir and motor assembly from the vehicle, disconnect the lock-tab wire connector (use a small screwdriver to unlock the tabs) and hose. Remove the retaining screws and lift the assembly from the left fender apron (or radiator support). Disconnection of the hose will drain the reservoir. The washer reservoir and motor assembly is serviced separately as is the cover and screen assembly. The motor, motor retainer and seal and pump impeller are not serviced separately.

The cover and reservoir are assembled with an interference fit. To remove the cover, grip the reservoir and tug on the cover strap until the cover comes off. To assemble the cover and reservoir, snap together by hand.

Attach the reservoir and motor assembly to the vehicle with the retaining screws. Connect the lock-tab wire connector and hose. Fill the reservoir and operate the washer system. Check for leaks and align the nozzles if necessary.

Do not operate the pump before adding fluid to reservoir.

WASHER PUMP—MANUAL

Pull back the floor covering and disconnect the hose from the pump (Fig. 2). Then, remove the two pump attaching screws and remove the pump.

To install, position the pump and install the two attaching screws. Then, connect the hose to the pump.

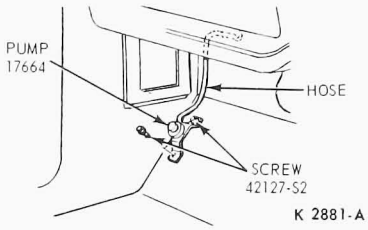

FIG. 2 Washer Pump—Foot Operated

PART 35-80 Horns

DESCRIPTION AND OPERATION

ALL EXCEPT BRONCO

All trucks are equipped with a single horn controlled by a relay. Dual horns are also available. The horn button closes the relay contacts, completing the circuit to the horn(s).

BRONCO

Bronco has a single horn that does not require a relay in the circuit. The horn button closes the circuit directly to the horn.

The circuit for the Econoline single horn or dual horns is controlled by a relay. The horn button circuit closes the relay contacts, completing the horn circuit.

TESTING

The only test necessary on a horn is for current draw.

Connect a voltmeter and ammeter to the horn and to a voltage supply as shown in Fig. 1. The normal current draw for the horns at 12 volts is 4.0 to 5.0 amperes.

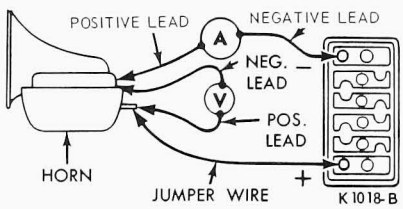

FIG. 1 Horn Current Draw Test

ADJUSTMENTS

The current is adjusted by changing the contact tension. Connect the horn as shown in Fig. 1. Turn the self-locking adjusting screw until the current is within the limits for the horn being adjusted.

REMOVAL AND INSTALLATION

HORN

ALL EXCEPT BRONCO AND ECONOLINE

The horns are mounted on the right and left radiator support. Tilt cab horns are mounted inside the cab hinge bracket. On Parcel Delivery trucks, the horn is mounted on the front of the dash board.

Disconnect the horn wire at the terminal, remove the retaining screws, and remove the horn.

To install, place the horn in position, and install the retaining screws. Install the horn wire.

BRONCO

Disconnect the horn wire at the terminal and remove the bolt and nut

retaining the horn to the left fender apron at the grille. Then, remove the horn.

Install the horn and secure it with a bolt and nut. Connect the lead. Check the horn operation.

ECONOLINE

Econoline horns are mounted on the forward face of the dash panel, high on the left side of the vehicle, and are accessible by raising the hood. To remove a horn, disconnect the wire connector at the horn terminal and remove the screw and lock washer retaining the horn assembly to the dash panel. To install, secure the horn in position with the screw and lock washer and connect the wire connector. Close the hood and check the operation of the horn.

HORN BUTTON

EXCEPT F-100 THROUGH F-350

The horn button assembly can be removed by pressing down evenly and turning the button counterclockwise until it lifts out. It is advisable to disconnect the connector at the horn relay (Battery on Bronco) to prevent the horns from sounding during this operation.

HORN BUTTON AND BRUSH PLATE W-SERIES

Removal

1. Disconnect the wire connector under the turn signal switch.
2. Press down evenly on the horn button and turn counterclockwise until it lifts out of the steering wheel hub. Remove the horn button spring.
3. Mark the steering wheel position on the steering column. Then, remove the steering wheel retaining nut and remove the steering wheel.
4. Remove the two screws that retain the plate and bush assembly to the steering column hub (Fig. 2). Then, unplug the wire connector from the plate and bush assembly and lift from steering column.

Installation

1. Place the plate and bush assembly to the steering column hub and connect the wire connector to the assembly. Install the two attaching screws.
2. Install the steering wheel and retaining nut. Refer to Group 13 for the nut torque specification.
3. Install the horn button spring and button.
4. Connect the wires at the connectors under the turn signal switch.

HORN SWITCH

ALL EXCEPT F-100 THROUGH F-350 AND W-SERIES

The horn switch is an integral part of the turn signal switch except with I.C.C. Turn Signal Switch (Fig. 2). For access to this switch, follow the procedure given for servicing the turn signal switch in Group 32 of this manual.

HORN SWITCH

F-100 through F-350

1. Remove one screw from the underside of each steering wheel spoke, and lift the horn switch assembly (steering wheel pad) from the steering wheel.
2. Disconnect the horn switch wires by pulling the spade terminal from the blade connector (Fig. 2). Squeeze or pinch the ground wire terminal firmly and pull it out of the hole in the steering wheel. **Do not pull the ground terminal out of the threaded hole without squeezing the terminal** to relieve the spring retention of the terminal in the threaded hole.
3. To install, connect the spade terminal to the blade connector, and press the ground terminal fully into the threaded hole (Fig. 2).
4. Position the horn switch (pad) on the steering wheel, and install the two attaching screws.

HORN RELAY

EXCEPT BRONCO AND ECONOLINE

Remove the wire connector from the horn relay. Remove the retaining screws and remove the relay.

ECONOLINE

The Econoline horn relay is located on the lower edge of the instrument panel, just to the right of the headlight switch. To replace the relay, disconnect the wire connector and remove the retaining screw. Attach the new relay to the instrument panel with the retaining screw and connect the wire connector. Test the operation of the horns.

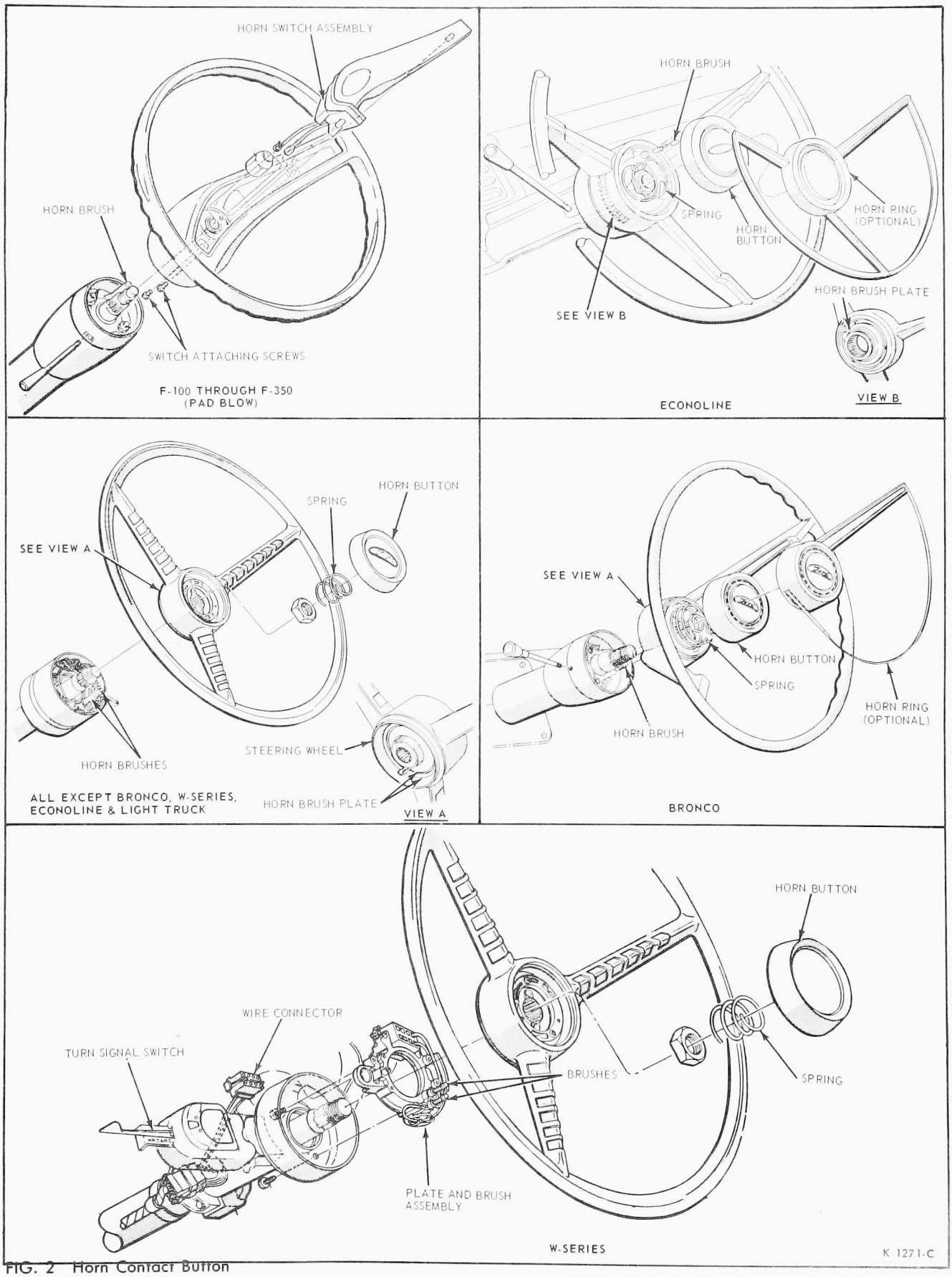

FIG. 2 Horn Contact Button

Ventilating, Heating and Air Conditioning

GROUP 36

PART 36-02 Page
Ventilating Systems 36-02-01

PART 36-10
Heating General Service 36-10-01

PART 36-20
F-L-and C-Series Truck Heating System 36-20-01

PART 36-21
W-Series Truck Heating System 36-21-01

PART 36-22
Bronco Heating System 36-22-01

PART 36-23
Econoline Heating System 36-23-01

PART 36-30 Page
Air Conditioning General Service 36-30-01

PART 36-61
Light Truck Heater/Air Conditioning System 36-61-01

PART 36-62
L-Series Truck Heater/Air Conditioning System 36-62-01

PART 36-63
W-Series Truck Heater/Air Conditioning System 36-63-01

PART 36-64
C-Series Air Conditioning System 36-64-01

PART 36-65
Econoline Air Conditioning System 36-65-01

PART 36-02 Ventilating Systems

COMPONENT INDEX Applies to Models as Indicated	MODEL APPLICATION					
	All Models	F- and L-Series	C-Series	W-Series	Econoline	Bronco
ADJUSTMENTS	02-02					
DESCRIPTION		02-01	02-01	02-01	02-02	02-02
REMOVAL AND INSTALLATION Cool Air Ventilator		N/A	N/A	N/A	N/A	02-02

A page number indicates that the item is for the vehicle(s) listed at the head of the column.
N/A indicates that the item is not applicable to the vehicle(s) listed.

DESCRIPTION

F-AND L-SERIES

The ventilation system consists of two air inlets which, when open, allow fresh air to enter the truck cab. One inlet is located in the left side cowl. The right inlet is located in the right side cowl or is integral with the heater, depending on vehicle and heater applications.

C-SERIES

The tilt cab truck has a fresh air inlet in the front of the truck at the cab floor level. Tilt cabs with a sleeper compartment have a fresh air inlet at the forward edge of the compartment on each side. This inlet is open at all times and cannot be closed. In addition, a hand operated vent on each side of the sleeper compartment can be adjusted to either force air into the compartment or vent it out of the compartment.

W-SERIES

The highway tractor has a hand operated adjustable fresh air inlet

located in each door, and a hand operated vent is located in the roof. In cab sleeper compartments, two-way intake and exhaust vents are offered in both compartments.

ECONOLINE

The left fresh air duct is located on the dash panel at the left side. Slide the door downward to open for fresh air.

The fresh air heater is designed to operate in conjunction with the right side fresh air ventilating system.

A fresh air outlet in the lower part of the heater plenum provides fresh air for the passenger. Rotate the door downward for fresh air. **The right side fresh air outlet must be closed for heating.**

BRONCO

The left fresh air duct is located on the extreme left side of the dash. Fresh air can be obtained through this duct by a manually operated door.

ADJUSTMENTS

VENTILATION CONTROLS-BOWDEN CABLE TYPE

Bowden cable operated vents and air inlets are adjusted so that the vents are tightly closed when the control knobs are all the way in. Loosen the Bowden cable retaining screw at the vent control arm, move the cable housing back and forth until the vent is closed when the knob is 1/16-1/8 inch from the in position, then tighten the retaining screw.

REMOVAL AND INSTALLATION

COOL AIR VENTILATOR—BRONCO

REMOVAL

1. Unlatch and raise the hood. Secure the hood in its open position with the hood support rod.
2. Carefully break the adhesive that secures the vent seal (Fig. 1) to the topside of the cowl. Remove the seal from the cowl.
3. Using force, gently unsnap the drain tube elbow from the duct assembly. Remove the elbow.
4. With the aid of a helper working inside the vehicle and holding the duct assembly in position, remove the ten screws that secure the duct assembly to the rear side of the cowl. Then, remove the eight screws that secure the top of the duct assembly to the top underside of the cowl.
5. Remove the vent assembly from the underside of the cowl.

INSTALLATION

1. Apply adhesive to the duct assembly flange opening.
2. With the aid of a helper holding the duct assembly in position on the underside of the cowl, install the 18 screws securing the vent assembly to the cowl.
3. Position the drain tube elbow at the drain opening and snap it into lock position.
4. Install the adhesive around the top flange of the cowl at the vent seal opening. Place the vent seal in position on the cowl and press down tightly on the mating surface.
5. Disengage the hood support rod from the hood and close the hood.

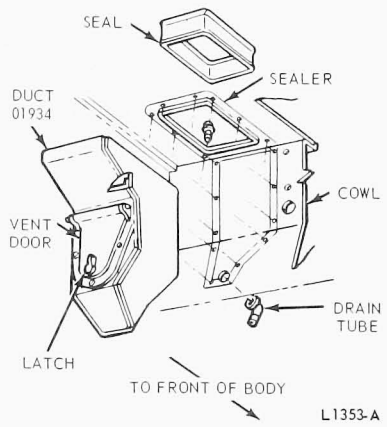

FIG. 1 Bronco Cool Air Vent

PART 36-10 Heating General Service

Applies to All Models

COMPONENT INDEX	Page	COMPONENT INDEX	Page
GENERAL INFORMATION		TESTING	
Heating Systems and Control Doors	10-01	Bleeding Air from Heater Core	10-02
Safety Precautions	10-01	Blower Switch Test	10-01
REMOVAL AND INSTALLATION		Heater Blower Motor Current Draw Test	10-01
Heater Hose	10-02	Loose Blower Test	10-01
SPECIFICATIONS	10-02	Open Circuit Test	10-01
		Plugged Heater Core Test	10-02

GENERAL INFORMATION

HEATING SYSTEMS AND CONTROL DOORS

With all Ford heating systems, outside air comes through an opening at the upper cowl and into the right duct of the heater assembly. All heater assemblies contain a heater core, through which flows hot coolant from the engine, and a blower. The air (forced by blower or ram effect) passes through and/or around the heater core and discharges through various outlets.

Several valves or doors determine the amount of air that goes through the heater core and the particular outlet(s) through which it discharges. The number of doors used differ according to the particular vehicle model.

SAFETY PRECAUTIONS

Whenever components in the engine compartment or instrument panel areas are being serviced, the battery ground cable must be disconnected to eliminate the possibility of electrical shorts, burned-up wiring, and dangerous fires. Extreme care must be exercised when performing electrical tests where the battery must be connected to operate the system.

Carbon monoxide is colorless, odorless and dangerous. If it is necessary to operate the engine with the vehicle in a closed area such as a garage, always use an exhaust collector to vent the exhaust gasses outside the closed area.

TESTING

The following tests may be made on the heater: Burned out fuses, loose wire connections, damaged wires, or collapsed hoses. Loose defroster ducts and air leaks in the body may be determined by visual inspection of the parts.

HEATER BLOWER MOTOR CURRENT DRAW TEST

This test will determine if the blower motor is operating properly. Connect a 0-50 ammeter as shown in Fig. 1. The blower motor will operate independently of the control switch, and the current drawn by the motor will be indicated on the ammeter. Current draw should be to specification.

LOOSE BLOWER TEST

Turn on the heater switch, and listen for the sound of the motor. If only a hum is heard, the blower wheel may be loose on the motor shaft.

BLOWER SWITCH TEST

To check the blower switch, place the switch in the off position. Then using a self-powered test light or ohmmeter, check for continuity between all of the terminals, two at a time. If the light should go on, this will indicate a short between the terminals or an inoperative switch.

OPEN CIRCUIT TEST

All electrical circuits must be complete from the source of power (battery), to the unit where the power is used, and back to the source of power again. A check at each connection in a circuit, starting at the battery, will locate an open circuit or will show that the circuit is complete.

An ohmmeter or self-powered test light connected at any two points of a circuit with the power removed from the circuit, will show if the circuit between the two connections is open or complete.

If the meter does not move or has a light movement (high resistance), the circuit may have a poor connection or broken wire. If the bulb does not light, the circuit is open.

If the meter movement is great or full (low resistance), the circuit is

complete. If the bulb lights, the circuit is complete.

PLUGGED HEATER CORE TEST

Start the engine and temporarily remove the outlet hose from the heater core (the hose that leads to the water pump). Very little or no flow of coolant from one core outlet indicates that the core is plugged. Make certain that water is being supplied to the core inlet.

BLEEDING AIR FROM HEATER CORE

Remove the hose at the outlet connection of the heater core (hose that leads to the water pump). Allow any trapped air to flow out. When a continuous flow of coolant is obtained, connect the hose to the core.

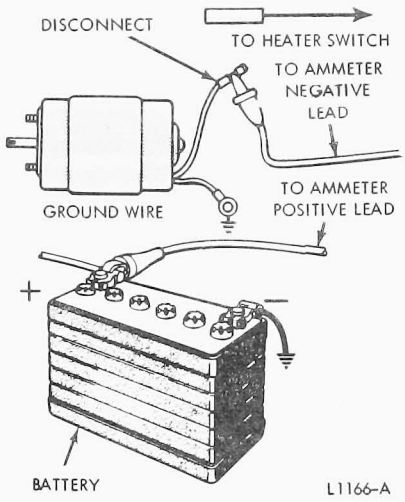

FIG. 1 Heater Motor Current Draw Test

REMOVAL AND INSTALLATION

HEATER HOSE ALL MODELS

To replace a heater hose, drain the coolant, remove the hose, cut a new hose to the same length as the old hose, install the hose, and replace the coolant. Make certain that the heater hose connections to the block are installed correctly. Also that the heater hoses cannot come in contact with any part of the exhaust system, or cannot become pinched in the tilt cab mechanism.

After the coolant has been replaced, bleed the air from the heater core.

SPECIFICATIONS

CURRENT DRAW LIMITS @ 12.8 VOLTS

Vehicle	Heater Blower Motor	Vehicle	Heater Blower Motor
Bronco	7.0 Max. Amps.	L-Series	Standard Output;
Econoline	12.3 Max. Amps.	C-Series	10 to 12 Amps.
Econoline Auxiliary	7.0 Max. Amps.	W-Series	High Output;
F-Series	8.0 Max. Amps.		17 to 20 Amps.

CL1355-A

PART 36-20 F-L-and C-Series Truck Heating System

Applies To F- L- and C-Series Trucks

COMPONENT INDEX	Page	COMPONENT INDEX	Page
ADJUSTMENTS		REMOVAL AND INSTALLATION	
Control Cables	20-05	Heater Assembly	20-05
DESCRIPTION AND OPERATION		Heater Blower Motor	20-08
Fresh Air Heater		Heater Blower Resistor	20-09
F-100-350	20-01	Heater Core	20-06
F-500-750 and L-Series	20-02	Heater Switch	20-07
C-Series	20-02	Heater Temperature Control Cable	20-09
		Heater Water Valve	20-09

DESCRIPTION AND OPERATION

Fresh air and recirculating heaters are available for various truck models, depending on model and engine usage. An auxiliary fresh air heater is available on trucks equipped with a sleeper cab.

FRESH AIR HEATER

F-100 THROUGH F-350

The heater used in the light truck is a fresh air heater drawing air from the cowl top area. The heater is mounted to the dash panel on the right side under the instrument panel (Fig. 1). The fresh air source for the heater is the right fresh air vent which is attached to the heater and the cowl side panel.

An air door within the heater controls the flow of air through the heater. This air door is controlled by the mode (lower) control lever. When the mode lever is in the OFF position, all air through the heater is shut off (ram air included). All air is directed to the floor area when the mode lever is in the FLOOR position, and to the windshield when the lever is in the DEF position. Air is directed to both the floor and windshield when the mode lever is positioned between FLOOR and DEF.

The temperature of the discharged air is controlled by the temperature (upper) control lever. Maximum cool air (fresh outside air) can be obtained by moving the temperature lever to the far left, and maximum heat when the temperature lever is at the far right. The temperature of the air can be varied by moving the lever to any position desired between COOL and WARM.

The blower switch has four positions; OFF, two intermediate positions, and HIGH. Ram air can be obtained when the vehicle is in forward motion and the mode lever is in any position other than OFF.

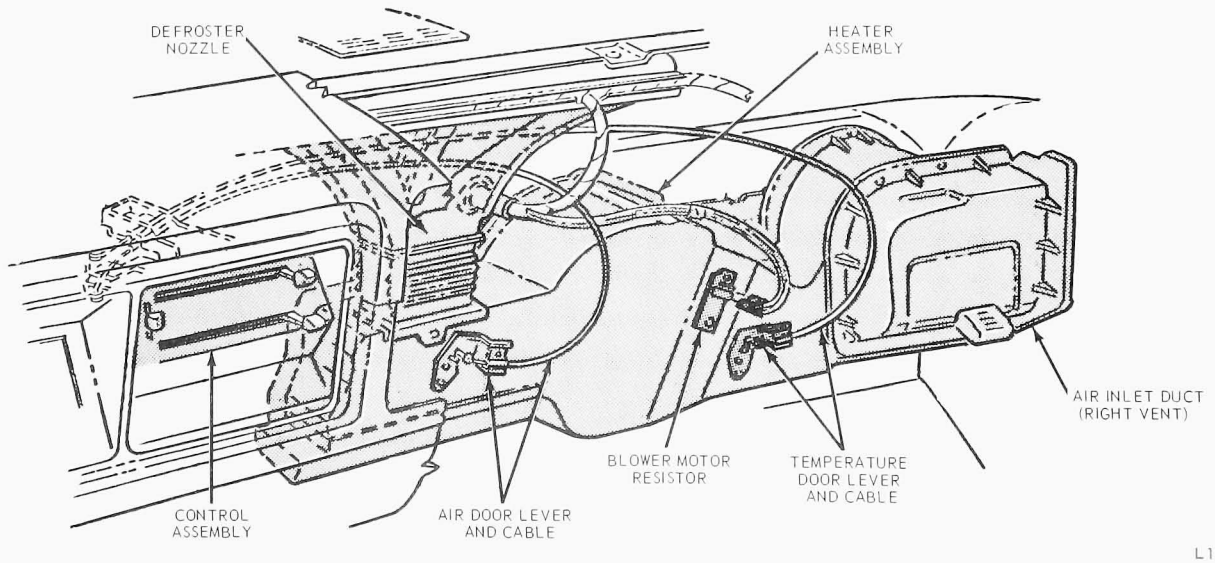

FIG. 1 Fresh Air Heater—F-100 Through F-350

FRESH AIR HEATER—F-500 THROUGH 750 AND L—SERIES

The fresh air heater is mounted to the dash panel and is connected to the right side cowl air duct (Figs. 2 and 3). This allows the heater to draw fresh air from outside the cab for heating and defrosting. An air door within the heater housing controls the air flow through the heater. This air door is controlled by sliding the heat lever to the heat position (F-500 through F-750) or by pulling the heat knob out (L-Series).

The temperature of the heated air is controlled by a valve that regulates the flow of water from the engine to the heater. The valve is operated by the **TEMPERATURE** control on the heater control panel. When no heat is desired, the temperature control is moved to the **OFF** position (F-500 through F-750) or the knob is pushed all the way in (L-Series). This closes the water control valve and stops the circulation of water through the heater core.

The defroster control operates an air door in the heater plenum chamber. On economy fresh air heater, a manual control located on the plenum regulates the defrost and heat doors.

Two speeds are provided for the heater blower by means of a three-position switch and a resistor.

FRESH AIR HEATER

C-SERIES

The fresh air heater is mounted to the dash panel under the instrument panel (Fig. 4), and draws fresh air from outside the cab and/or recirculated air from inside the cab for heating and defrosting. A shutter on the heater housing, draws fresh air from behind the truck grille when the fresh air control is pulled out.

The temperature of the heated air is controlled by the fresh air control. For maximum heat, push the fresh air knob all-the-way in. Pull the control knob out for minimum heat. Any position between full in and full out will result in air temperatures between maximum and minimum heat. Air flow is controlled by the heater blower switch. (center control)

Defroster operation is controlled by the defrost switch which operates the defroster blower motor. This is a separate blower motor from the heater blower.

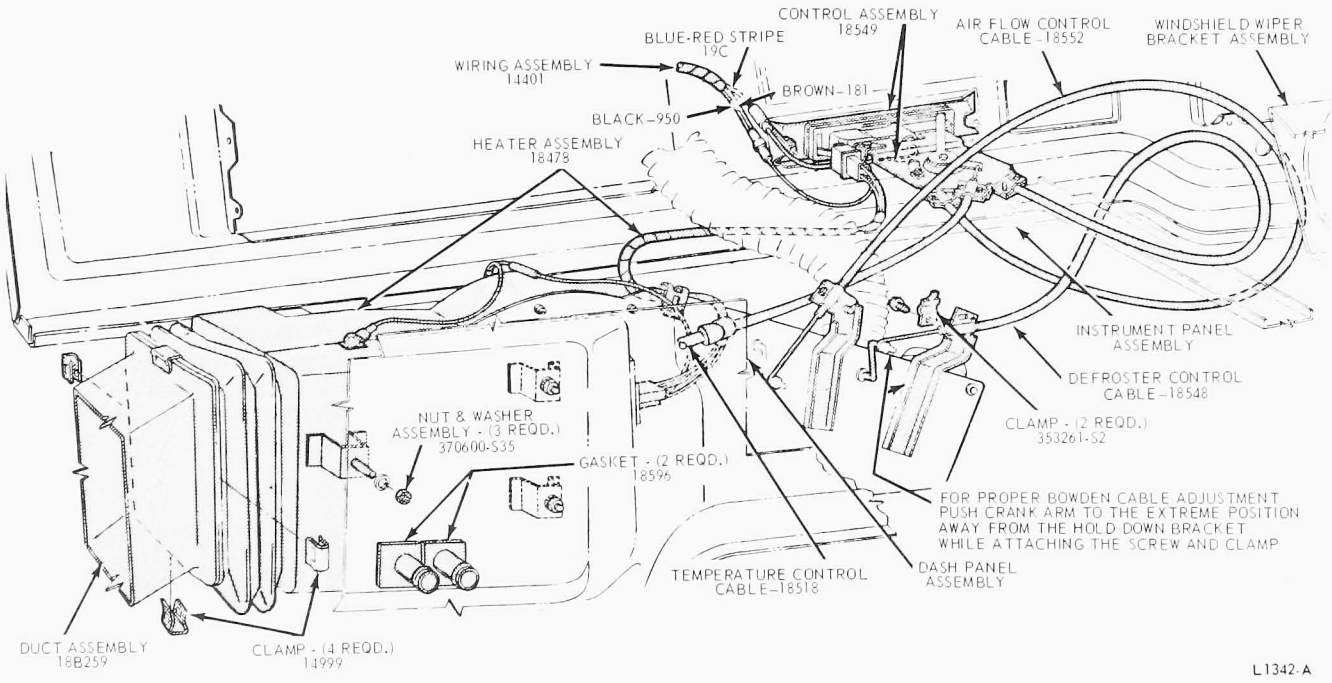

FIG. 2 Heater Installation—F-500 through F-750

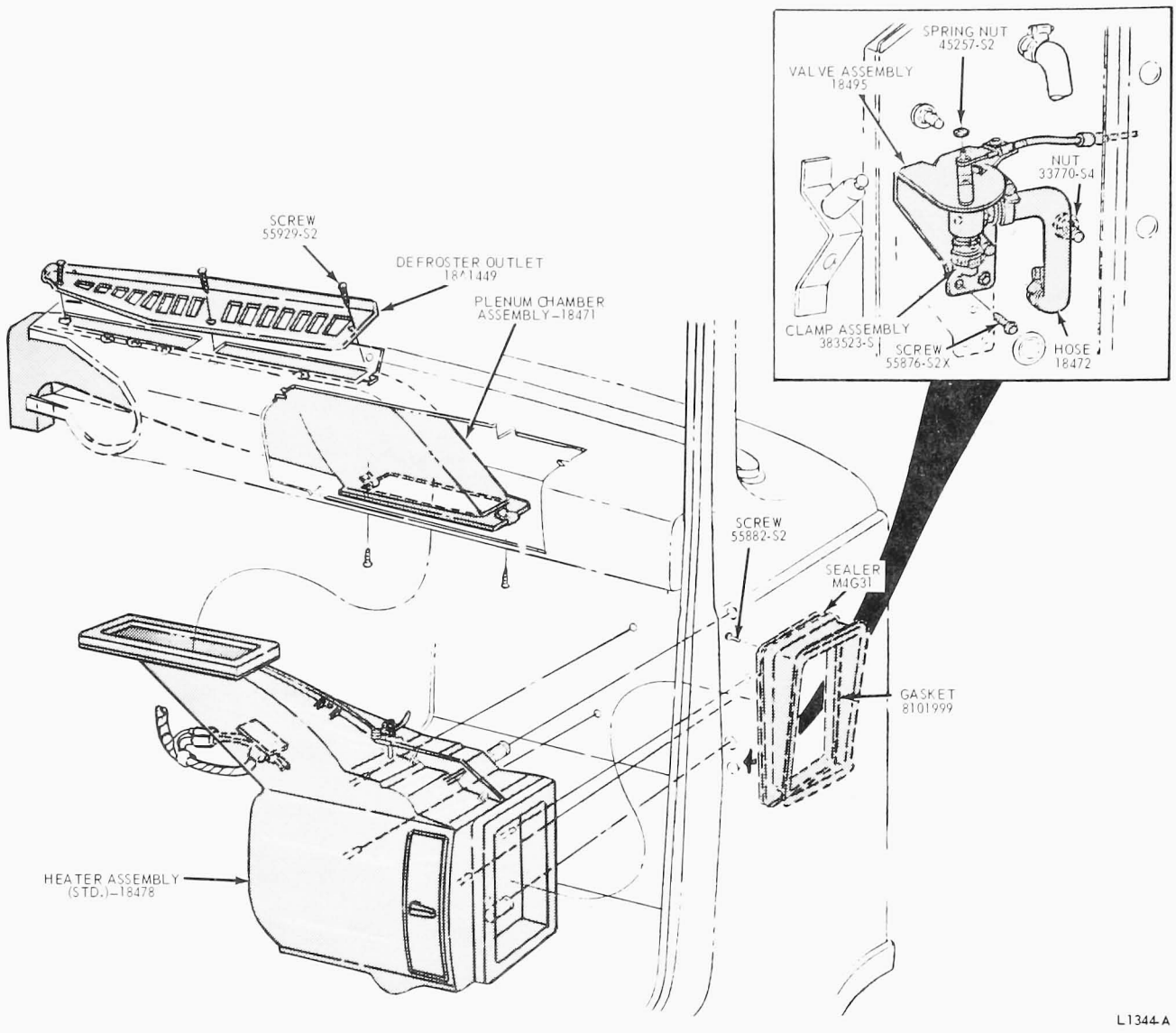

FIG. 3 Heater Installation—L-Series

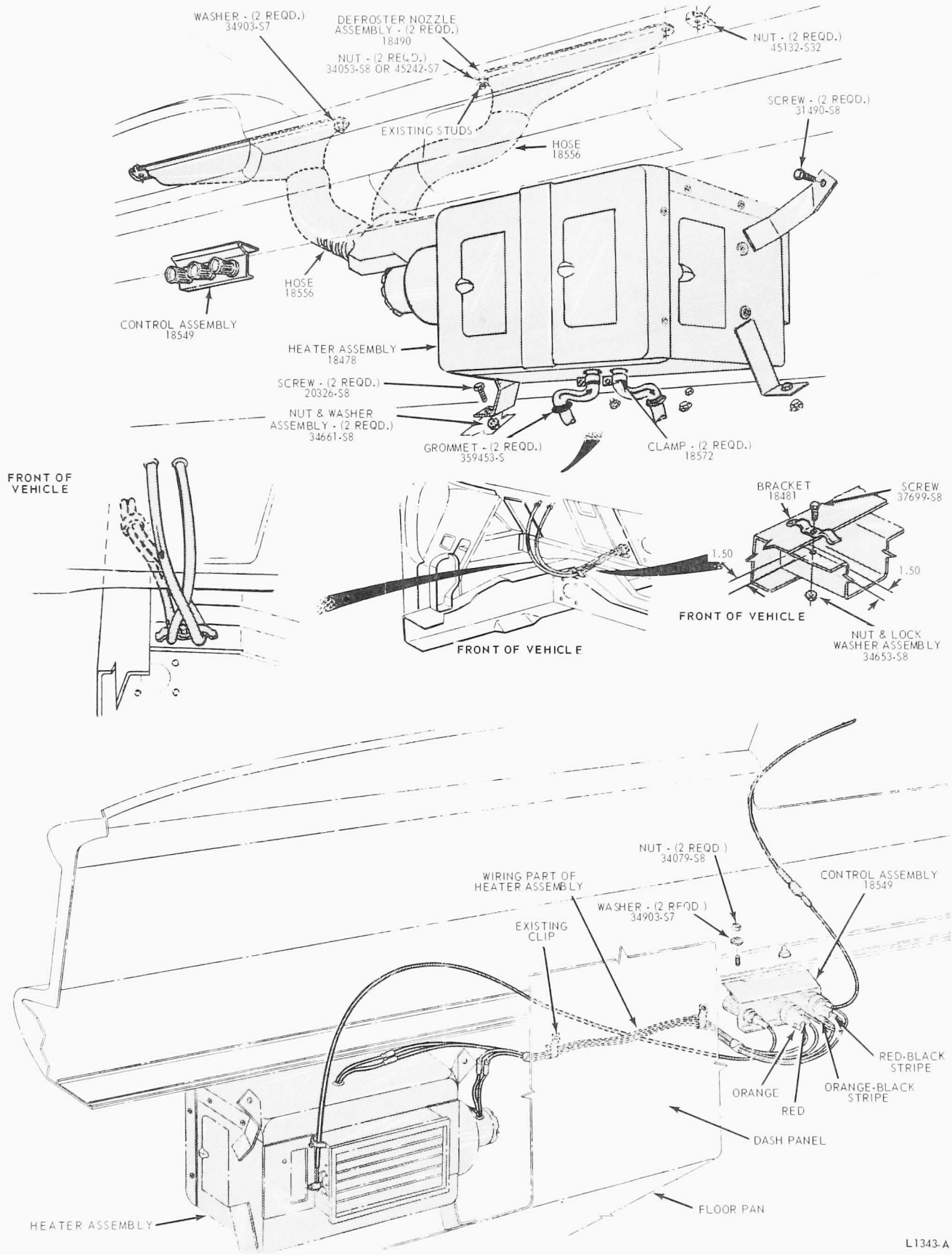

FIG. 4 C-Series Heater

ADJUSTMENTS

CONTROL CABLES

F-100 THROUGH F-350

Air Door Control Cable

To adjust the mode control cable, loosen the cable clamp screw at the plenum. Place the mode (lower) control lever in the DEF position. Then, push the air door crank to the extreme right position (Fig. 5), and tighten the cable clamp attaching screw.

Temperature Control Cable

To adjust the temperature control cable, loosen the cable clamp at the heater housing. Place the temperature (upper) control lever in the WARM position. Then, push the temperature door crank to the extreme right position (Fig. 5), and tighten the cable clamp attaching screw.

F-500 THROUGH F-750

Heat Door Control Cable

1. Loosen the cable clamp at the heater housing (Fig. 2).
2. Move the lower control lever to the mid-position of the control head slot.
3. Pull the heat door crank arm to full open position (towards driver's side) and tighten the cable retaining clamp.

Defrost Door Control Cable

1. Loosen the cable clamp at the heater housing (Fig. 2).
2. Move the lower control lever to the mid-position of the control head slot.
3. Pull the defrost door to off position (towards driver's side) and tighten the cable retaining clamp.

Temperature (Water Valve) Control Cable

1. Loosen the cable clamp at the heater water valve.
2. Move the upper control lever to off position.
3. Pull the water valve crank arm to the off position (toward front of vehicle) and tighten the retaining clamp.

Removal and Installation

HEATER ASSEMBLY

F-100 THROUGH F-350

Removal of the heater assembly is necessary for blower motor and/or heating core replacement.

Removal

1. Disconnect the temperature and air door Bowden cables from the heater housing. **This must be done to prevent damage to the cables.**
2. Disconnect the wires from the blower resistor (Fig. 6) and the blower motor.
3. Remove 5 screws attaching the air inlet (vent) duct to the heater housing (Fig. 6).
4. Remove clip attaching defroster duct to heater (Fig. 7). Disengage defroster duct from heater.
5. Disconnect the blower wires (Fig. 8).
6. Drain the radiator and remove the heater hoses from the heater core.
7. Remove 3 heater stud retaining nuts and remove heater (Fig. 8).

Installation

1. Position heater assembly in vehicle and install 3 stud retaining nuts.
2. Connect heater hoses to heater core and fill radiator.
3. Connect blower motor wires.

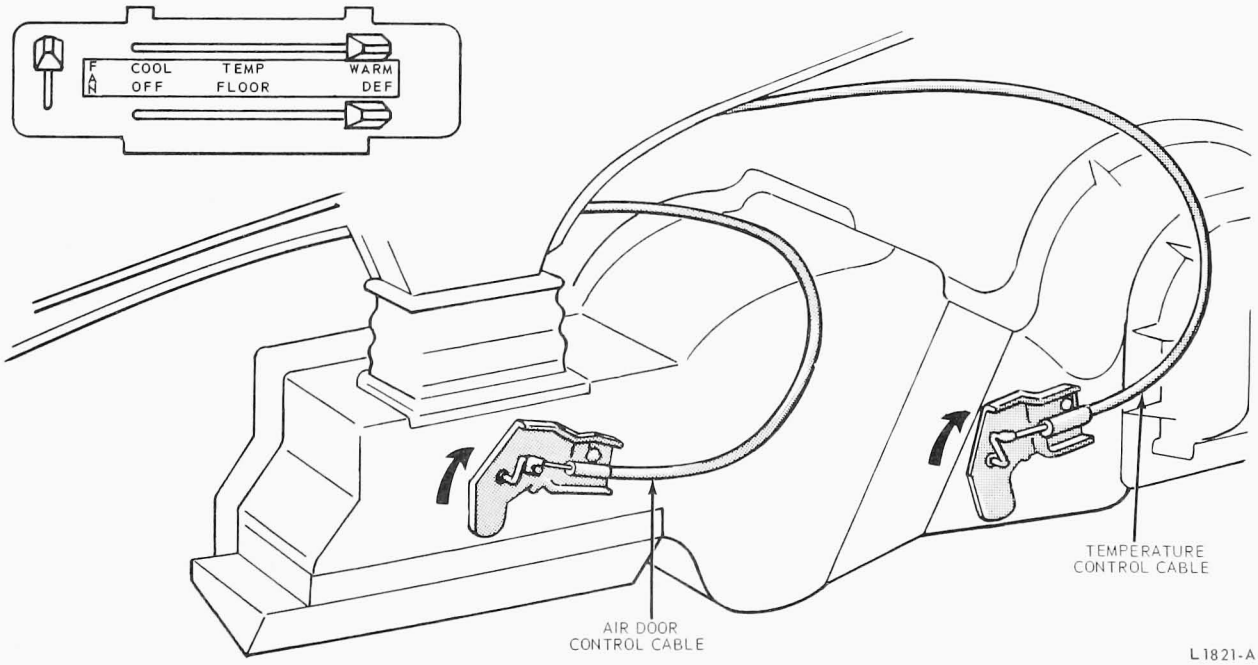

FIG. 5 Heater Control Cable Adjustments—F-100 Through F-350

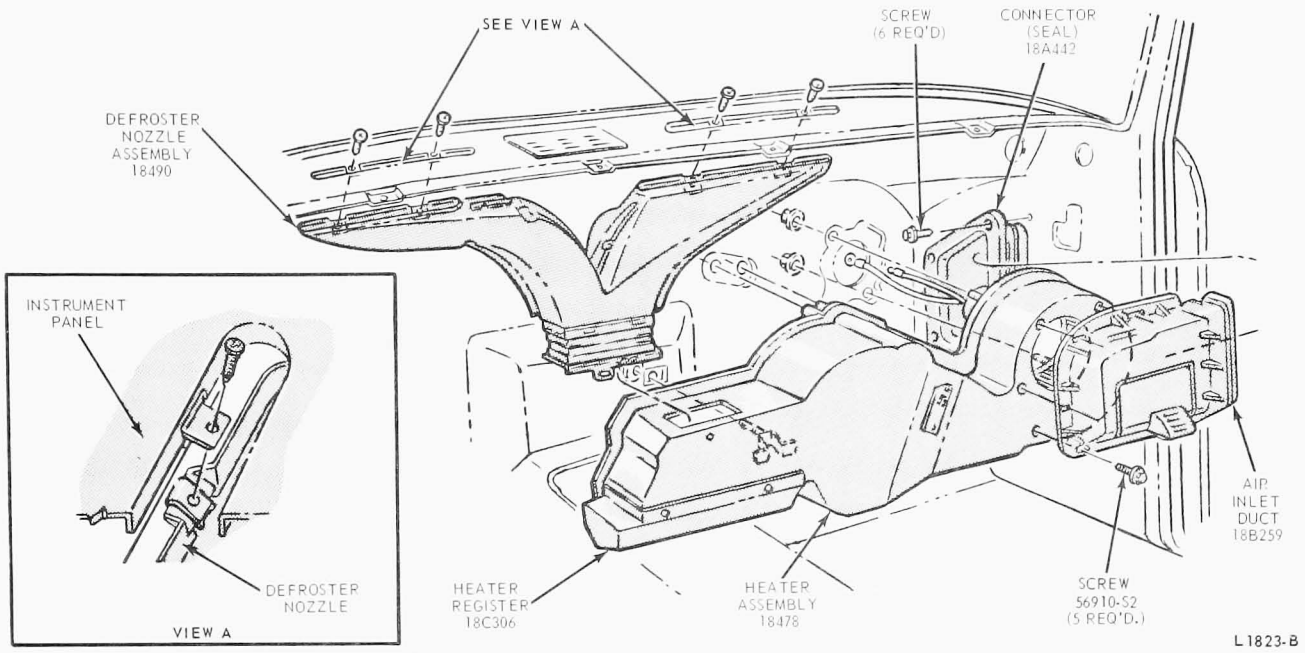

FIG. 6 Heater Installation—F-100 Through F-350

4. Connect defroster duct to plenum and install clip (Fig. 7).
5. Install air inlet (vent) duct to heater. Push duct firmly against seal on side cowl and tighten 5 attaching screws.
6. Connect wires to blower motor resistor and blower motor.
7. Connect temperature and air door cables to heater, and adjust the cables (Fig. 5).
8. Check heater operation.

HEATER CORE

F-100 THROUGH F-350

1. Remove heater assembly.
2. Remove heater core cover and gasket (4 screws).
3. Pull heater core and lower support from heater.
4. Install foam gaskets on heater core and install in heater assembly.
5. Install the core seal and cover plate.
6. Install heater in vehicle.

F-500 THROUGH F-750

1. Drain the cooling system and disconnect both heater hoses at the heater.
2. Remove the three nuts and washers that retain the heater assembly to the dash panel (Fig. 2).
3. Remove the glove box.
4. Remove the five screws that retain the air inlet duct to the cowl, pull the heater assembly from the dash panel, and disconnect both defroster nozzles from the heater.
5. Disconnect the wire lead to the blower motor and resistor.
6. Disconnect the control cables from the heater, and remove the assembly to a bench.
7. Remove the core cover stop bracket (8 retaining screws), remove the retaining clip, and remove the core from the case.
8. Transfer the pad to the new core (no glue), position the core in the case, and install the clip and core cover (8 retaining screws).
9. Position the heater assembly to the dash and cowl, and start one heater-to-dash retaining nut.
10. Connect the blower motor and resistor wire lead, and install the five duct-to-side cowl screws.
11. Connect and adjust the control cables, and connect the defroster nozzles to the heater.

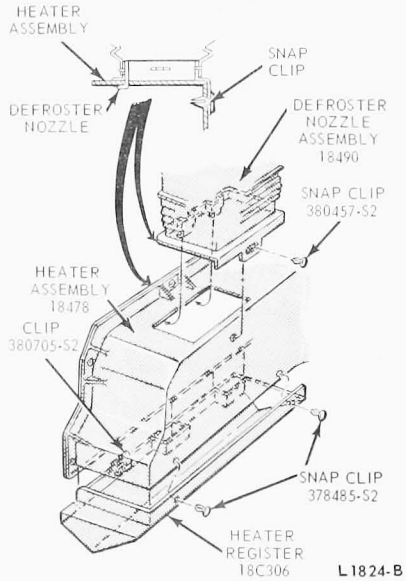

FIG. 7 Defroster Duct Attachment at Plenum—F-100-350

12. At the engine side of the dash panel, install the remaining two heater-to-dash nuts and tighten the one that was started in Step 9.
13. Position the pads to the core tubes, connect the heater hoses, and fill the cooling system.

L-SERIES

1. Drain the cooling system and disconnect both heater hoses at the core.
2. Disconnect the control cable at the top of the heater assembly (spring nut, clip and screw. See Fig. 3).
3. Disconnect the motor wire leads, and remove the heater front cover (12 retaining screws).
4. Pull the old core from the heater, transfer the core pads to the new core, and push the new core into the heater case.
5. Route the motor leads through the front of the cover assembly, position the cover to the heater, and install the twelve retaining screws.
6. Connect the motor leads.
7. Connect the control cable at the top of the heater assembly (clip, screw and spring nut). Adjust the cable.
8. Connect both heater hoses and fill the cooling system.

C-SERIES

1. Drain the coolant.
2. Disconnect the defroster hoses at the plenum chamber (Fig. 4).
3. Disconnect both blower motor wires at the connectors. Remove the glove box liner to gain access to the heater motor wire disconnects.
4. Disconnect the heater hoses at the heater.
5. Remove the heater lower mounting bolts, nuts and lock washers.
6. Remove the upper mounting screws and move the heater assembly away from the dash. Disconnect the Bowden cable from the air inlet door and remove the heater assembly from the truck.
7. Remove the top cover.
8. Remove the heater core mounting screws and remove the core from the housing.
9. Position the new core in the housing, install the mounting screws and install the top cover.
10. Position the heater assembly to the dash and connect and adjust the air door Bowden cable.
11. Install the upper mounting screws and the lower mounting bolts, lock washers and nuts.
12. Connect the heater hoses to the heater.
13. Connect both motor wires, color to color at the disconnects, and install the glove box liner.
14. Connect the defroster hoses at the plenum chamber. Install the coolant. Bleed any air from the heater core, check for leaks and check the heater operation.

HEATER CONTROL

F-100 THROUGH F-350

Removal

1. Disconnect the battery ground cable.
2. Pull the knob and disc off each radio control shaft.
3. Remove the fuel gauge switch knob (if so equipped), heater control knobs and wiper washer knob. Use a hook tool to release each knob lock tab.
4. Remove the knob and shaft from the lights switch.
5. Remove the nut and washer from each radio control shaft, and remove the radio bezel.
6. Remove the cluster bezel (Group 33). The attaching screws are located as follows: 4 screws along top of bezel; one screw between the lights and wiper-washer switch; and 2 screws below the radio. Then, disconnect the illumination light from the bezel between the lights and wiper-washer switch.
7. Remove 4 heater control attaching screws and pull the control away from the mounting bracket. Disconnect the blower switch and illumination light wires and the 2 Bowden cables from the control assembly.

Installation

1. Install the Bowden cables on the control assembly as shown in Fig 9. **The pigtail of the cable must point away from the control lever as shown.**
2. Connect the illumination light wires at the connector and the blower wire connector to the blower switch.
3. Position control assembly to mounting plate and install 4 screws.
4. Install the cluster bezel, radio bezel and all knobs.
5. Connect the ground cable to the battery and check operation of control assembly. Adjust the Bowden cables if necessary.

HEATER BLOWER SWITCH

F-500 THROUGH F-750

1. Remove the control knob from the switch shaft by loosening the set screw.
2. Disconnect the connector plug from the switch.
3. Disconnect the left defroster duct and position it out of the way in order to gain access to the heater control.
4. Remove the two heater control-toinstrument panel retaining nuts,

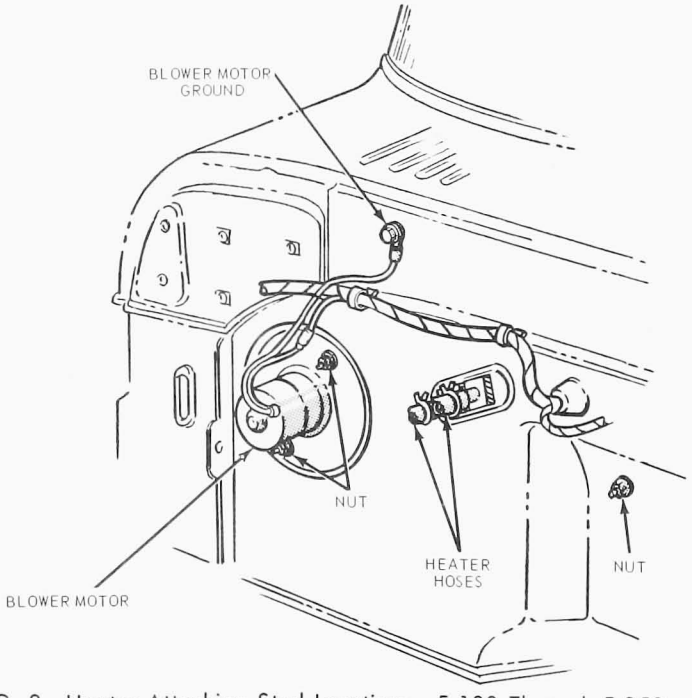

FIG. 8 Heater Attaching Stud Locations—F-100 Through F-350

and pull the control assembly out of the panel.
5. Remove the heater switch from the control assembly (1 retaining screw).
6. After installing the switch, test it for blower operation.

L-SERIES—LINE HAUL MODELS

1. Remove the battery box cover, and disconnect the ground cable.
2. Remove the strip that retains the instrument cluster side pad (4 screws), and swing the hinged pad down to gain access to the switch.
3. Remove the heater control assembly (4 retaining screws).
4. Remove the control knob from the switch shaft by loosening the set screw, disconnect the push-on connector, and remove the switch from the control assembly (1 retaining screw).

L-SERIES—CITY DELIVERY MODELS

Remove the control knob from the switch shaft by loosening the set screw. Reaching up under the instrument panel, disconnect the multiple connector. Remove the switch-to-heater control retaining screw and remove the switch from under the instrument panel.

C-SERIES

1. Remove the heater blower switch knob. The knob is held on the shaft by a set screw or by a spring clip. The spring clip type knob is removed by depressing the clip with a small screwdriver through a slot in the side of the knob.
2. Remove the switch from its mounting location with the wires attached. Transfer each wire spade connector to the new switch one at a time so as to connect the wires to the proper terminals.
3. Mount the switch and install the knob.

HEATER BLOWER MOTOR

F-100 THROUGH F-350

1. Remove the heater assembly.
2. Remove 2 screws and 2 nuts attaching blower to heater.
3. Remove blower fan from motor shaft, and remove motor from mounting plate.
4. Install new motor on mounting plate and install blower fan on motor shaft.
5. Install blower and motor in heater. Then, install the heater.

F-500 THROUGH F-750

1. Remove the glove box for access.
2. Disconnect the motor quick disconnect wire. Disconnect the ground wire at the top of the heater assembly (1 screw).
3. Remove the four retaining screws, and remove the blower motor and wheel assembly from the heater case.
4. Remove the blower wheel from the motor shaft by loosening the set screw.
5. Remove the motor from its mounting plate (2 retaining nuts).
6. Install the new motor to the mounting plate, assemble the blower wheel to the motor shaft, and install the assembly to the heater case.
7. Connect the power lead, install the ground wire screw, and check blower operation.
8. Install the glove box.

L-SERIES

1. Disconnect the control cable at the top of the heater assembly, and remove the spring nut, clip, and screw (Fig. 3).
2. Disconnect the motor electrical leads.
3. Remove the heater front cover (12 retaining screws).
4. Remove the screw that retains the motor to the mounting plate, rotate the motor to unlock it, and remove the motor and wheel assembly.
5. Remove the blower wheel from the motor shaft (1 set screw) and install it on the new motor.
6. Position the blower motor and wheel to the heater assembly mounting plate, rotate the motor to lock it in place, and install the retaining screw.
7. Route the wire leads through the front of the heater cover, install the cover, and secure with 12 retaining screws.
8. Connect the motor leads.
9. Connect the control cable at the top of the heater assembly, install the clip, screw, and spring nut, and adjust the cable.

C-SERIES

Removal and installation of the heater blower motor and blower wheel is accomplished as shown in Fig. 10 after first removing the blower housing front cover. After installing the blower and

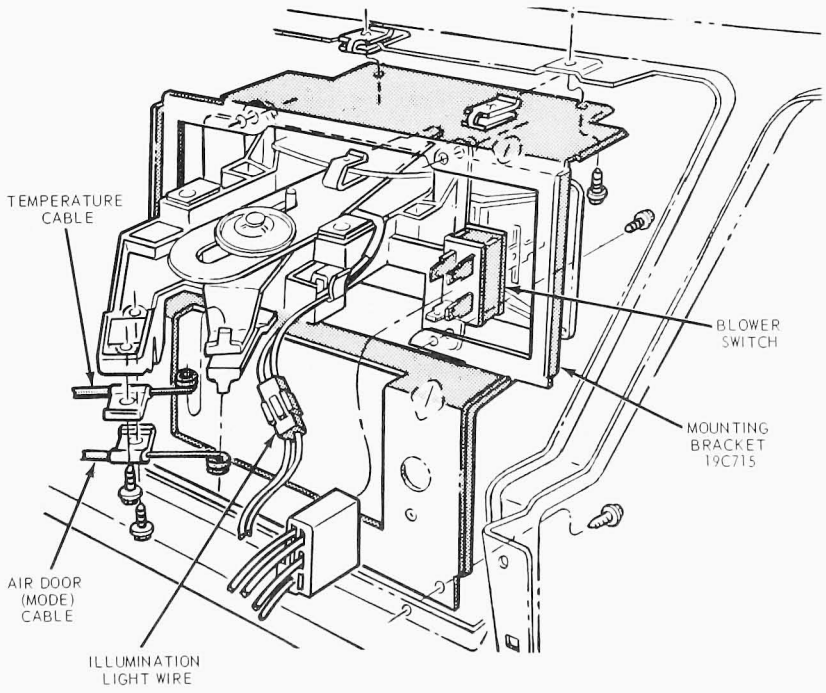

FIG. 9 Heater Control Assembly—Rear View—F-100 Through 350

fan, be sure that the ground connection is tight and makes good electrical contact.

PARCEL DELIVERY

Removal and installation of the heater blower motor and blower wheel can be accomplished, as shown in Fig. 11, after first removing the blower housing front cover. After installing the blower and fan, be sure that the ground connection is tight and makes good electrical contact.

HEATER WATER VALVE

F-500 THROUGH F-750

1. Partially drain the cooling system to just below the level of the valve.
2. Disconnect the temperature control cable from the heater water valve (screw and clip).
3. Disconnect both hoses from the valve and remove the valve.
4. After installing the valve, adjust the temperature control cable as outlined in Adjustments, start the engine and check for leaks.

L-SERIES

1. Drain the cooling system.
2. Disconnect the temperature control cable from the heater water valve (spring nut, clip and screw).
3. Disconnect both hoses from the valve, remove three valve-to-dash panel retaining screws, and remove the valve.
4. After installing the valve, adjust the temperature control cable.

HEATER TEMPERATURE CONTROL CABLE

F-500 THROUGH F-750

1. On the engine side of the dash, disconnect the battery ground cable, and disconnect the temperature control cable from the heater water valve.
2. In the cab, remove the glove box, the right defroster nozzle, and the ash tray with retainer for access to the heater control.
3. Remove the heater control assembly from the instrument panel (two retaining nuts).
4. Disconnect the temperature control cable from the heater control assembly (screw, clip, and spring nut).
5. Pull the control cable out of the vehicle from the engine side of the dash panel.
6. When installing, push the control cable through the dash panel from the engine side.
7. Set the control levers in the center position of the control head slot, and connect the cable to the heater control assembly. Install the heater control assembly to the instrument panel (two retaining nuts).
8. Connect the cable to the water valve, adjust the cable as outlined in Adjustments, and seat the grommet in the dash panel.

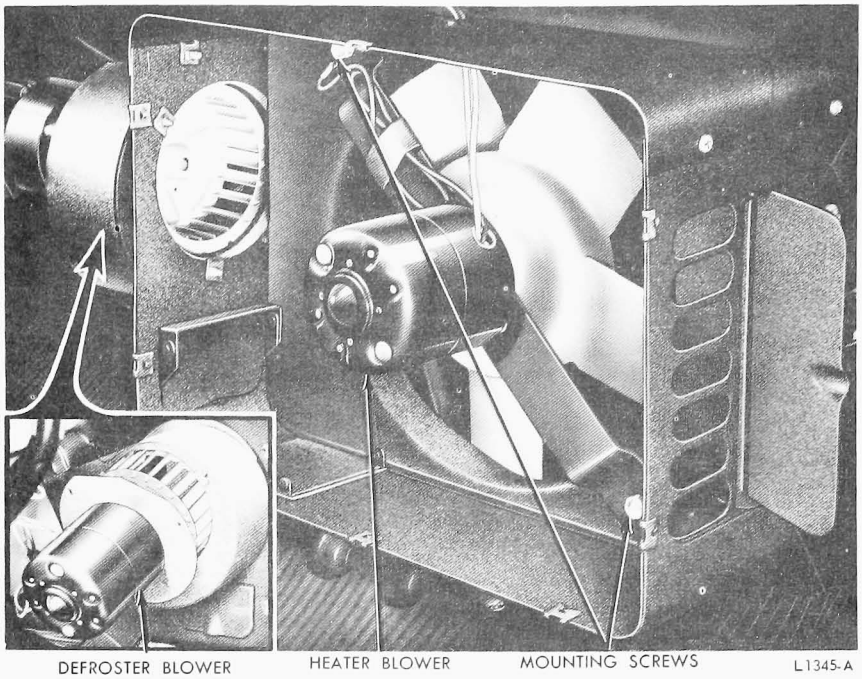

FIG. 10 Heater Blower Motor Removal—C-Series

HEATER BLOWER RESISTOR

F-100 THROUGH F-350

The blower resistor is mounted on the heater near the temperature door cable attachment. To replace the resistor, disconnect the wire connector and remove the two 2-piece snap clips retaining the resistor to the heater. Remove the center of the snap clip first. Then, remove the rest of the clip.

F-500 THROUGH F-750

1. Remove the glove box for access.
2. Through the glove box opening, remove the resistor top retaining screw. Also remove the resistor lower retaining screw from the left end of the heater by using a long 1/4-inch drive extension.
3. Pull the resistor out through the glove box opening, disconnect the wire, and remove the resistor.
4. Connect the new resistor to the wire, and install it through the glove box opening. Install the upper retaining screw.

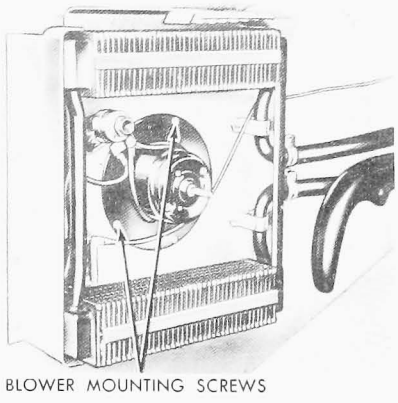

FIG. 11 Heater Blower Motor Removal—Parcel Delivery

5. Install the lower retaining screw from the left end of the heater using a long 1/4-inch drive extension. The screw can also be guided with the right hand through the lower opening of the heater.
6. Install the glove box, and test motor operation.

L-SERIES

The resistor is attached to the lower side of the heater assembly by two plastic retainers. Disconnect the plug and pry out the retainers to replace. Test motor operation after installation.

HEATER HOSE ROUTINGS

The heater hose routings for the light truck fresh air heater are shown in Fig. 12.

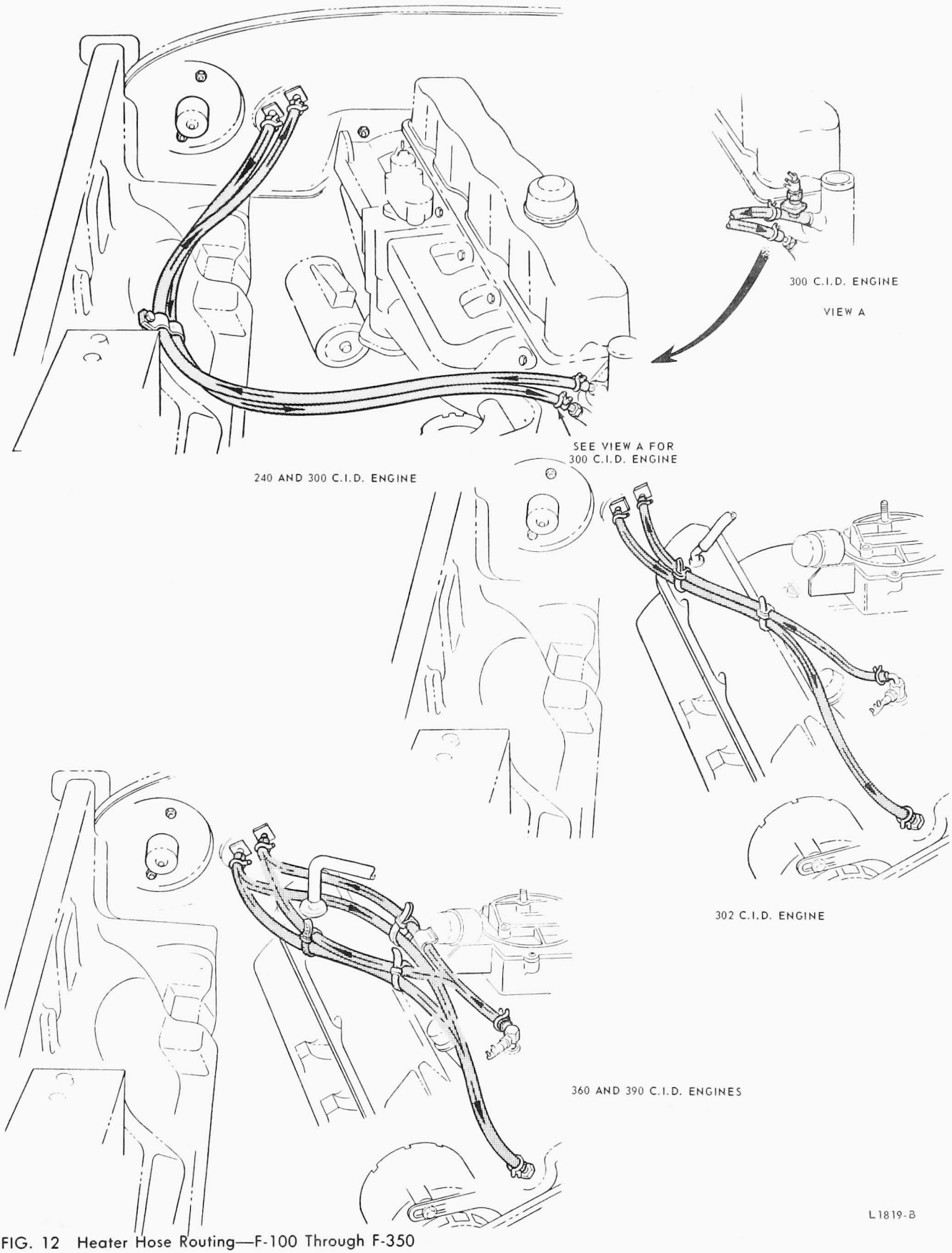

FIG. 12 Heater Hose Routing—F-100 Through F-350

PART 36-21 W- Series Truck Heating System

Applies To W-Series Trucks

COMPONENT INDEX	Page	COMPONENT INDEX	Page
ADJUSTMENTS		REMOVAL AND INSTALLATION	
Control Cables	21-01	Defroster Control Cable	21-02
Hot Water Control Valve	21-01	Heater Blower Motor	21-02
		Heater Core	21-03
DESCRIPTION AND OPERATION	21-01	Heater Control Cable and Switch	21-01

DESCRIPTION AND OPERATION

The heater is a fresh air type heater and is located to the right of the fuse and/or circuit breaker console. All parts of the heater can be serviced from within the truck cab except the heater water hoses and the manual water shut-off valve, which are serviced from the underside of the cab.

There are three controls mounted on the left side of the heater. The forward-most control operates a fresh-air damper door and is used to supply fresh air for heater operation. This door should be open for heater operation (control pulled out).

The second knob is a dual purpose control which operates the hot-water control valve for heater operation and provides a three-speed operation of the double centrifugal blower. This water control valve should not be confused with the manual water shut-off valve located at the engine water outlet. Pull the control out to increase heater air temperature. Push the control all the way in to shut the heater off for summer operation.

The third knob is labeled as the **DEFROST** control. This control should be pulled out for maximum defroster operation. When the control is pushed in, heater air is directed toward the cab floor with a minimum of defroster air. To obtain spot defrosting, rotate the frog eyes on the top of the unit to direct air to the desired location on the windshield. The frog eyes can be rotated 360 degrees and pivoted up or down to any one of five positions. They are most effective with the defrost control knob pulled out (defrost position).

ADJUSTMENTS

HOT WATER CONTROL VALVE

Check the operation of the hot water control valve. When the control knob is pushed in, the valve should shut off. Adjust the Bowden cable as necessary so the valve is off when the control knob is pushed in.

CONTROL CABLES

The defrost doors, air doors, and water valve controls must be adjusted so that the doors and valves are at the end of their travel when the control knobs are all the way in.

Loosen the Bowden cable retaining screw at the air door or valve control, move the cable housing back and forth until the air door or valve is at the end of its travel when the knobs are 1/16-1/8-inch from the in position, then tighten the retaining screw.

REMOVAL AND INSTALLATION

HEATER WATER VALVE CONTROL CABLE AND BLOWER SWITCH ASSEMBLY

Removal

1. Remove the heater grille retaining screws and grille.
2. Remove the heater top cover secured by retaining screws (Fig. 1).
3. Remove the control knob.
4. Remove the nut retaining the switch and cable assembly.
5. Disconnect the switch push-on connectors.
6. Remove the clip at the water control valve and remove the cable and switch assembly.

Installation

1. Position the new switch and cable assembly and install the retaining nut (Fig. 1).
2. Install the control knob.
3. Install the clip at the water control valve. Adjust and tighten the valve retaining screw.

4. Connect the switch with push-on connectors.
5. Install the heater top cover with retaining screws.

DEFROSTER CONTROL CABLE

Removal

1. Remove the retaining screws and heater register (Fig. 1).
2. Remove the heater top cover secured by retaining screws.
3. Remove the screw and clip retaining the cable to the top of the heater, and position the cable out of the defroster door.
4. Remove the nut retaining the cable to the side of the heater and remove the cable assembly.
5. Transfer the control knob.

Installation

1. Position the defroster cable to the heater and install the retaining nut.
2. Position the cable to the door. Adjust the cable and install the clip and screw.
3. Install the heater top cover.
4. Install the heater grille.

HEATER BLOWER MOTOR

1. Remove the retaining screws and heater register (Fig. 1).
2. Remove the heater top cover secured by retaining screws.
3. Remove the cable retaining clip and disconnect the cable at the fresh air door.
4. Remove the retaining nut and remove the fresh air door cable from the heater assembly.
5. Remove the cemented seal from the top of the blower housings.
6. Remove the clip retaining the defroster door cable to the heater housing and disconnect the cable at the defroster door.
7. Remove the nuts securing the motor strap and motor ground wire.
8. Disconnect four wires at the heater switch.
9. Remove the screws securing the blower housings to the heater housing and center plate.
10. Remove the blower housings, motor and cages as a unit.
11. Remove the screws from the right and left sides of the blower-housing-to-motor mounting brackets and separate the housings from the motor and cages.
12. Remove the right and left cages from the motor shaft secured by Allen screws.
13. Transfer the two mounting brackets to the new motor and secure with nuts.
14. Install the cages to the motor shaft with Allen screws.
15. Position the right and left blower housings to the brackets on the motor and secure with four screws on each side.
16. Position the blower housings, motor and cage assembly into the heater housing.
17. Install four screws right and left side, blower housings to heater housing. These screws also retain the center plate.
18. Connect the four motor wires to the switch.
19. Position the motor strap around the motor and to the heater housing and install two nuts. One nut also retains the motor ground wire.
20. Connect and adjust the cable to the defroster door and install the clip.
21. Position the fresh air door cable to the heater housing and install the retaining nut loose. Connect the cable to the door then tighten the nut.
22. Install and adjust the fresh air door cable clip.
23. Cement the seal across the top of the blower housings.
24. Install the heater top cover and side grille with screws.

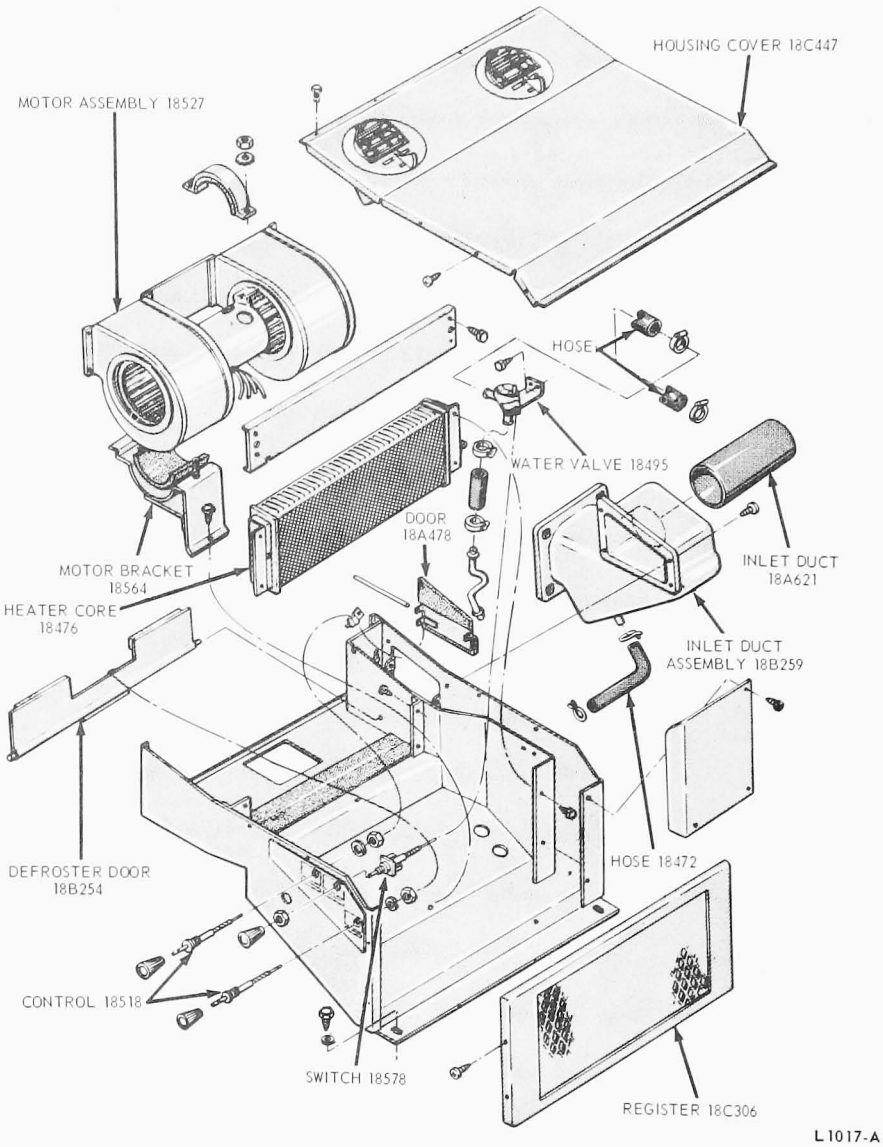

FIG. 1 W-Series Heater Disassembled

HEATER CORE

Removal

1. Drain the coolant.
2. Unlock and tilt the cab.
3. Disconnect both heater hoses at the core and control valve tubes.
4. Lower the cab.
5. Remove the top cover from the heater assembly.
6. Remove the register from the side of the heater assembly (Fig. 1).
7. Remove the cable retaining clip and disconnect the cable at the fresh air door.
8. Remove the retaining nut and remove the fresh air door cable from the heater assembly.
9. Remove the seal from the top of the blower housings.
10. Remove the clip (1 screw) retaining the defroster door cable to the heater housing and disconnect the cable at the defroster door.
11. Remove the blower motor hold-down strap secured by two nuts (Fig. 1). One nut also retains the blower motor ground wire.
12. Disconnect four wires at the heater switch.
13. Remove eight screws securing the blower housings to the heater housing and center plate.
14. Lift out the blower housings, motor and cages as a unit.
15. Remove the defroster door pivot plate secured by six screws.
16. Remove the heater core top retaining plate secured by five screws. Note the defroster door cable routed between the plate and the core.
17. Remove the three screws securing the heater core to the left side of the heater assembly.
18. Remove the clip from the switch and control valve cable and disconnect the cable at the valve.
19. Remove two screws securing the valve and bracket to the heater housing.
20. Lift out the core, valve and bracket as a unit, from the heater assembly.
21. Transfer the valve, bracket and hose to the new heater core. (Disconnect the valve hose at the core tube.)

Installation

1. Position the core, valve and bracket as a unit into the heater housing.
2. Install the valve and bracket to the heater housing and secure with two screws.
3. Position the defroster door pivot plate to the heater housing and secure it with screws.
4. Install screws on the left side securing the heater core to the heater housing.
5. Install the heater core top retaining plate. Route the defroster door cable between the plate and the core.
6. Connect the control cable to the control valve.
7. Install the valve control cable retaining clip and adjust the valve control cable.
8. Position the blower housing, motor and cages into the heater housing as a unit.
9. Install the right and left blower housings to the heater housing. One screw also retains the center plate.
10. Connect the four wires to the switch.
11. Install the motor retaining strap along with the motor ground wire.
12. Connect the cable to the defroster door and adjust it. Install the retaining clip.
13. Position the fresh air door cable to the heater housing and install the retaining nut loose. Connect the cable to the door then tighten the nut.
14. Install and adjust the fresh air door cable clip.
15. Cement the seal across the top of the blower housings.
16. Install the heater top cover and side grille with screws.
17. Tilt the cab.
18. Connect both heater hoses.
19. Lower and lock the cab.
20. Fill the cooling system and check the heater operation.

PART 36-22 Bronco Heating System

Applies To Bronco

COMPONENT INDEX	Page	COMPONENT INDEX	Page
ADJUSTMENTS		REMOVAL AND INSTALLATION	
Control Cables	22-03	Air Door Control Cable and Blower Switch Assembly	22-04
DESCRIPTION AND OPERATION		Blower Motor	22-04
Air Flow	22-01	Heater Core	22-03
Control Operation	22-01		

DESCRIPTION AND OPERATION

AIR FLOW

Outside air enters the heater assembly through an air duct in the right cowl, flows through the blower and the heater core fins into the plenum chamber, and discharges through the defroster nozzles and/or the floor outlet (Fig. 1).

When the blower is **off,** the air is forced through the system by the forward motion of the vehicle. When the blower is **on,** it increases the air flow by drawing the air from the inlet duct and forcing it through the heater core.

When hot engine coolant flows through the heater core, the air is heated as it passes through. When the heater water valve shuts off the flow of coolant through the core, the air passes through and discharges unheated for fresh air ventilation.

CONTROL OPERATION

The temperature (right) control (Fig. 2) operates a cable connected to the heater water valve (Fig. 1). Pushing the knob in closes the water valve shutting off the flow of hot coolant from the engine through the heater core (no heat). Pulling the knob out opens the valve to allow flow of hot coolant through the core. The farther out the knob is pulled, the greater the coolant flow and the higher the temperature. At full out position, the water valve is wide open (maximum heat).

The center control knob performs two functions: it actuates a cable connected to the outside air door; and it controls the blower motor switch. Pulling the knob **out** opens the outside air door allowing outside air to flow through the heater core into the plenum chamber. Pushing the knob in shuts off air flow. With the knob turned left to OFF position, the blower is off and outside air is forced through the system by the forward motion of the vehicle only. Turning the knob to the right (HI or LO blower speeds) increases the flow of air through the system.

The heat/defrost (left) control knob actuates a cable connected to the heat/defrost door (Fig. 1). When the knob is **pulled out,** the door directs discharged air through the defroster nozzles to the windshield. When the knob is **pushed in,** the control door directs air through the floor outlet to the passenger compartment. Pulling the knob part way out, directs part of the discharge air to the windshield and part to the floor.

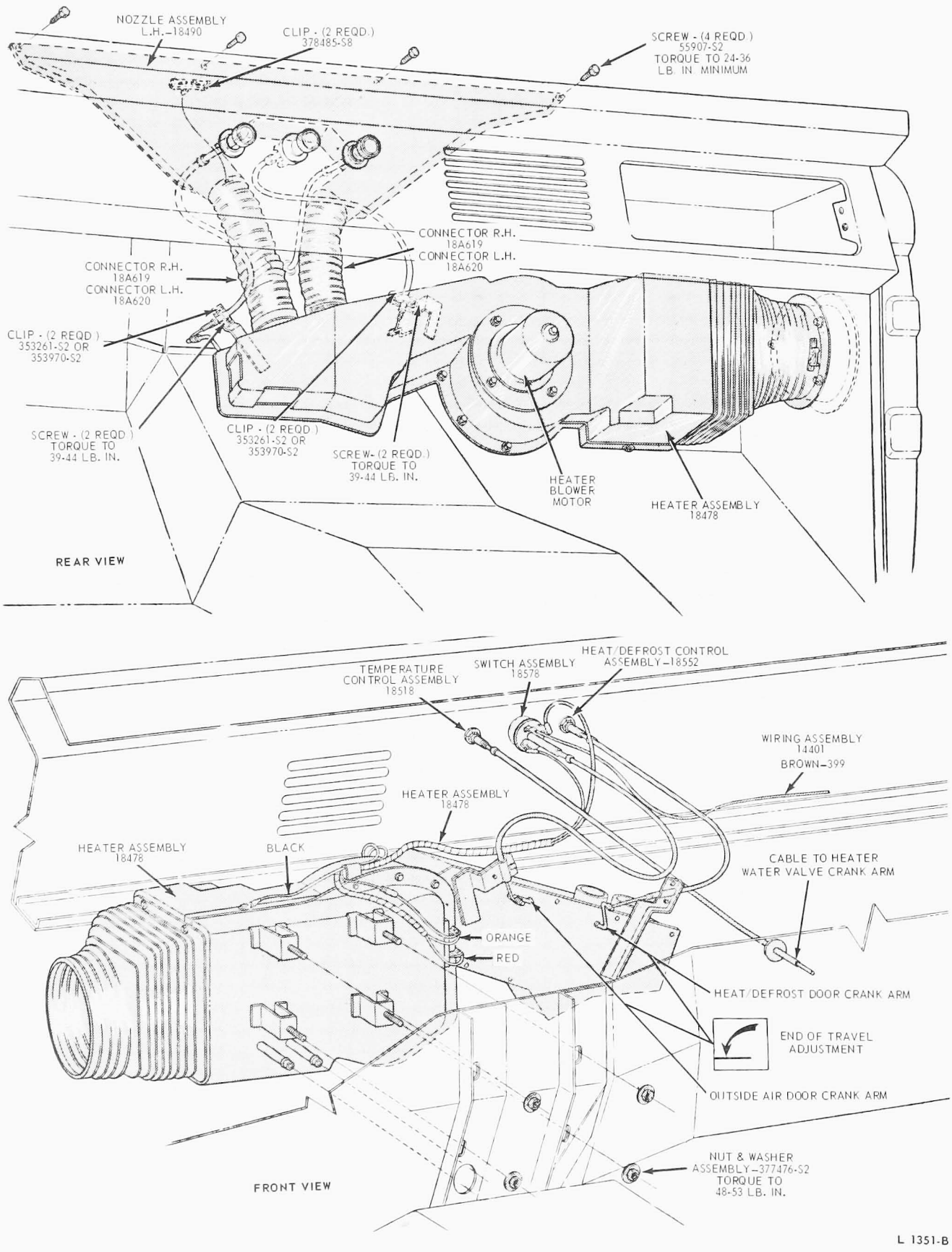

FIG. 1 Heater Installation—Bronco

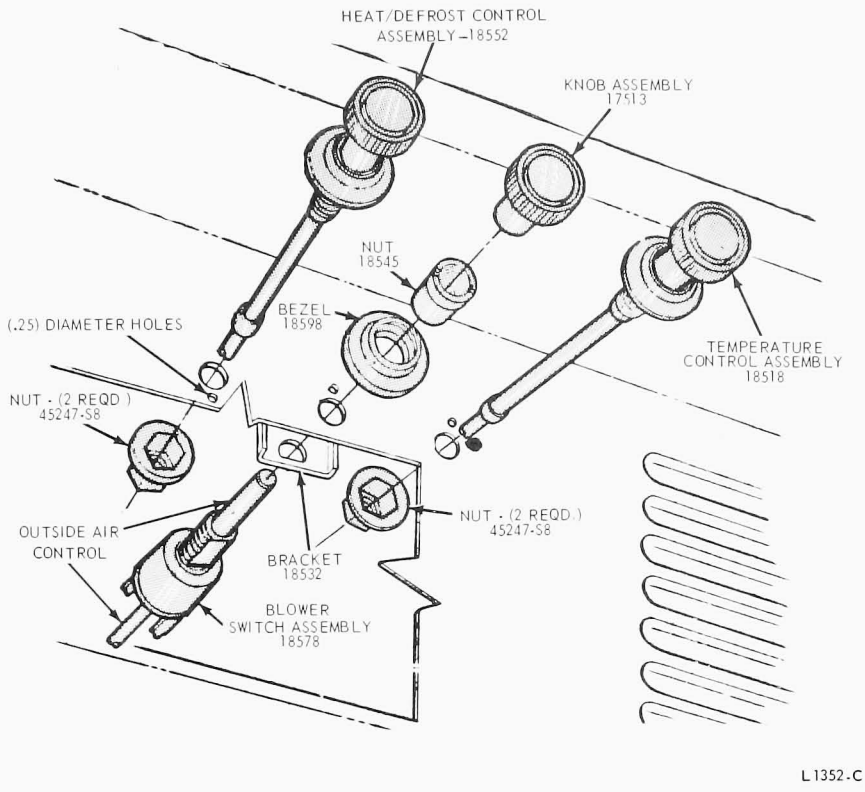

FIG. 2 Heater Controls—Bronco

ADJUSTMENTS

CONTROL CABLES

The heat/defrost door, outside air door, and water valve control cables must be adjusted so that the doors and valve are at the end of their travel when the control knobs are 1/16 to 1/8-inch from the end of their travel (fully pushed-in position).

Loosen the Bowden cable retaining clip screw at the air door or valve crank arm (Fig. 1). Move the cable housing back and forth until the crank arm is at the end of its travel as shown in Fig. 1 when the knobs are 1/16 to 1/8-inch from the fully pushed-in position. Then, tighten the retaining screw.

REMOVAL AND INSTALLATION

HEATER CORE

1. Drain the cooling system.
2. Disconnect both heater hoses at the heater (Fig. 1). Remove the rubber pads from the core.
3. Remove the nuts and star washers retaining the heater assembly to the dash panel.
4. Disconnect the right and left defroster hoses at the plenum.
5. Disconnect the fresh air inlet at the cowl. Rest the heater on the floor.
6. Disconnect the heat/defrost door cable at the door crank arm (Fig. 1).
7. Disconnect the outside air door cable at the crank arm.
8. Disconnect the electrical wires at the connector.
9. Remove the heater assembly from the vehicle.
10. Remove the screws retaining the rear cover. Remove the clip retaining the core in the case and remove the core.
11. Transfer the seals from the heater core to the new core.
12. Position the core in the case. Install the retaining clip. Position the cover and install the retaining screws.
13. Position the heater assembly on the floor in the vehicle. Connect the wire connectors.
14. Connect and adjust the outside air door control cable.
15. Connect and adjust the heat/defrost door control cable.
16. Position the heater assembly to the dash and install the nuts and washers.
17. Position the heater core pads over

the core and connect both hoses.
18. Connect the defroster hoses and fresh air intake.
19. Fill the cooling system.
20. Check the heater operation and check for leaks.

HEATER BLOWER MOTOR

1. Disconnect the electrical connectors and the ground wire from the top of the heater.
2. Remove the screws retaining the motor to the plenum chamber, and remove the motor assembly (Fig. 1).
3. Loosen the blower wheel Allen screw.
4. Remove the motor from the mounting plate.
5. Install the motor to the mounting plate.
6. Install the blower wheel.
7. Position the motor to the plenum. Install the retaining screws.
8. Connect the electrical lead and the ground wire.
9. Check the operation of the blower.

OUTSIDE AIR DOOR CONTROL CABLE AND BLOWER SWITCH ASSEMBLY

1. Remove the control knob (center control, Fig. 2). Push up on the clip in the knob to remove it.
2. Remove the blower control switch bezel nut and the bezel (Fig. 2).
3. Disconnect the cable from the outside air door crank arm (retaining clip and screw).
4. Disconnect the motor high and low speed lead wires at the switch assembly.
5. Remove the heater control switch and cable assembly with the retainer from the underside of the instrument panel.
6. Connect the motor high and low speed lead wires to the switch assembly.
7. Position the heater switch and cable assembly with retainer to the back of the instrument panel and install the bezel and bezel retaining nut.
8. Install the heater control switch knob.
9. Connect the cable to the outside air door crank arm and install the retaining clip and screw (Fig. 1).
10. Adjust the cable as outlined in Adjustments.

PART 36-23 Econoline Heating System

Applies To Econoline

COMPONENT INDEX	Page
ADJUSTMENTS	
Heater Controls	23-01
DESCRIPTION AND OPERATION	
Auxiliary Hot Water Heater	23-01
Fresh Air Heater	23-01

COMPONENT INDEX	Page
REMOVAL AND INSTALLATION	
Auxiliary Hot Water Heater	23-02
Heater Core and/or Blower Motor	23-01
Heater Switch	23-02

DESCRIPTION AND OPERATION

FRESH AIR HEATER

The fresh air heater is designed to operate in conjunction with the right side fresh air ventilating system. The left fresh air duct is located on the dash panel at the left side. Slide the door open for fresh air. The heater assembly attaches to the air inlet located on the right side of the dash. Controls for the heater are located in the instrument panel to the right of the instrument cluster.

The temperature control is the left lever. Pushing the lever down increases the amount of air flowing through the heater core, and thus increases the temperature. Engine coolant flows through the heater core at all times.

The defrost control is the right lever. Pushing the lever down opens the defroster outlets.

AUXILIARY HOT WATER HEATER

The auxiliary hot water heater is a recirculating type heater which provides additional heat for the rear seat area.

A combination water temperature control and blower switch is the only control used for the auxiliary heater and is located on the instrument panel. Engine coolant flow through the heater core is increased in proportion to the amount the control is pulled out to give more heat. Blower operation is controlled by rotating the knob. However, the auxiliary heater blower will not operate until the engine coolant temperature is near the enggine thermostat opening temperature. This is controlled by a thermostat switch connected to the fresh air heater hot water hose.

ADJUSTMENTS

HEATER CONTROLS

The defrost door and air door must be adjusted so that each door is at the end of its travel when the control knob is 1/16 to 1/8-inch from the end of its travel (up position).

Remove the glove box (and radio, if so equipped) to provide access to the heater control. Loosen the Bowden cable retaining screw (Fig. 2) on the heater control. Move the heat (left) control lever into the detent at the OFF position. Then, adjust the heater door bellcrank to the closed position by rotating the top of the crank toward the rear of the vehicle (Fig. 1). Tighten the Bowden cable retaining screw.

To adjust the defroster door, disconnect the defrost door control cable from the ball-joint on the control. With the control lever in the detent at the OFF position, push the link up to close the defroster door. Adjust the link length so that it will snap back on the ball-joint.

REMOVAL AND INSTALLATION

HEATER CORE AND/OR BLOWER MOTOR

1. Open the hood and remove the battery to gain access to the heater mounting bolts.
2. Drain the cooling system.
3. Disconnect the heater hoses at the heater (Fig. 1).
4. Disconnect the heater resistor and motor leads.
5. From under the hood remove the three heater-to-dash mounting bolts. Then, move the heater out of position to gain access to the control cable and disconnect the cable. Remove the heater assembly to a bench.

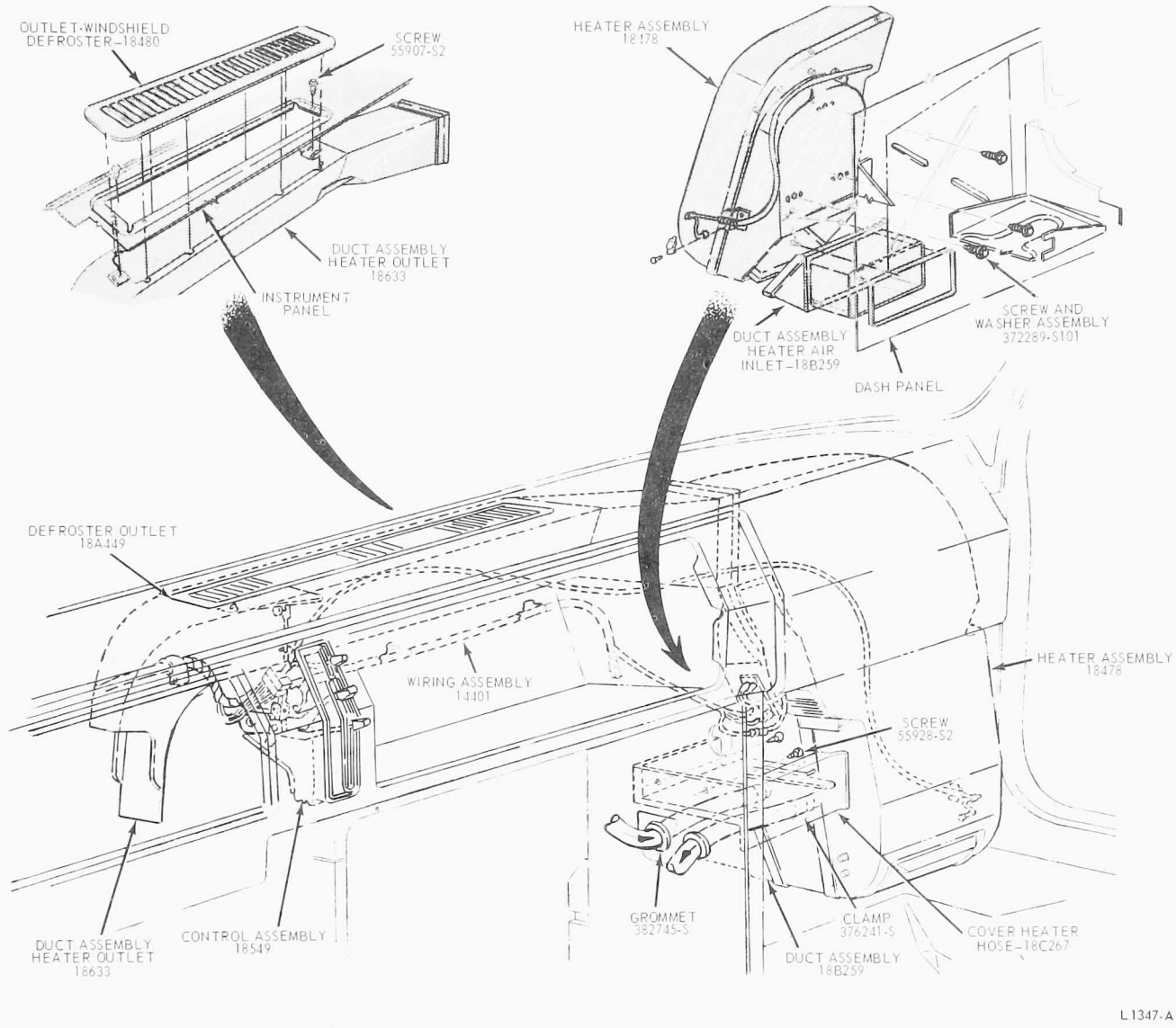

FIG. 1 Heater Installation—Econoline

6. Separate the two halves of the heater case (16 screws and one clip).

For heater core replacement, use Steps 7, 8 and 14 through 18.

7. Remove the heater core.
8. Transfer the core pads to the new core, and position the core in the case.

For blower motor replacement, use Steps 9 through 18.

9. Remove two screws and lift the motor and wheel from the front half of the heater housing.
10. Remove the blower wheel and motor mounting bracket.
11. Position the new motor in the mounting bracket and install the mounting bolts and nuts.
12. Install the blower wheel.
13. Position the motor assembly in the housing and install the mounting screws.
14. Position both halves of the case together and install the screws and clip.
15. Place the heater controls in the OFF position. Place the heater on the wheel housing as near the installed position as possible. Pull the air door closed (toward rear of vehicle) and connect the control cable.
16. Position the heater to the dash, and install the three mounting bolts. Use an assistant and make certain that the housing openings line up with the defroster and fresh air openings.
17. Connect the resistor and motor leads.
18. Connect the heater hoses.
19. Install the battery and fill the cooling system.

HEATER SWITCH

1. Remove the switch, heat and defroster knobs.
2. Remove the glove box, or radio if so equipped.
3. Remove the control front finish panel by removing the retaining clip at the bottom of the panel (Fig. 2).
4. Remove the engine cover, and remove the lower screw retaining the heater control to the lower edge of the instrument panel.
5. Remove the upper retaining screw in the face of the instrument panel and remove the control through the glove box opening after disconnecting the defroster control link at the ball joint.

6. Remove the screw retaining the heater switch, and disconnect the wiring plug.
7. Position the new switch to the control and install the retaining screw. Connect the wiring plug.
8. Position the control to the instrument panel and install the upper and lower retaining screws (Fig. 2).
9. Install the front finish cover. Slip the upper retaining projection in place and install the retaining clip at the bottom.
10. Install the control knobs, the glove box (or radio) and the engine cover.

AUXILIARY HOT WATER HEATER HEATER CORE AND/OR BLOWER MOTOR

Removal

1. Disconnect the battery ground cable.
2. Raise the vehicle on a hoist.
3. Remove the two hoses from the heater core and plug the hoses (Figs. 3 and 4).
4. Remove the rubber insulators from the heater core tubes.
5. Remove the four nuts from the heater assembly retaining studs.
6. Lower the vehicle.
7. Disconnect the two electrical leads at the heater assembly.
8. Remove the heater from the vehicle.

Installation

1. Position the heater assembly in the vehicle, inserting the mounting studs through the floor pan (Fig. 4).
2. Connect the two electrical leads at the heater assembly.
3. Raise the vehicle on a hoist.
4. Install the four nuts on the heater assembly retaining studs.
5. Install the rubber insulators on the heater core tubes.
6. Remove the plugs from the heater hoses and install the hoses on the heater core tubes securing them with clamps.
7. Lower the vehicle.
8. Add required coolant to the cooling system.
9. Connect the battery ground cable.

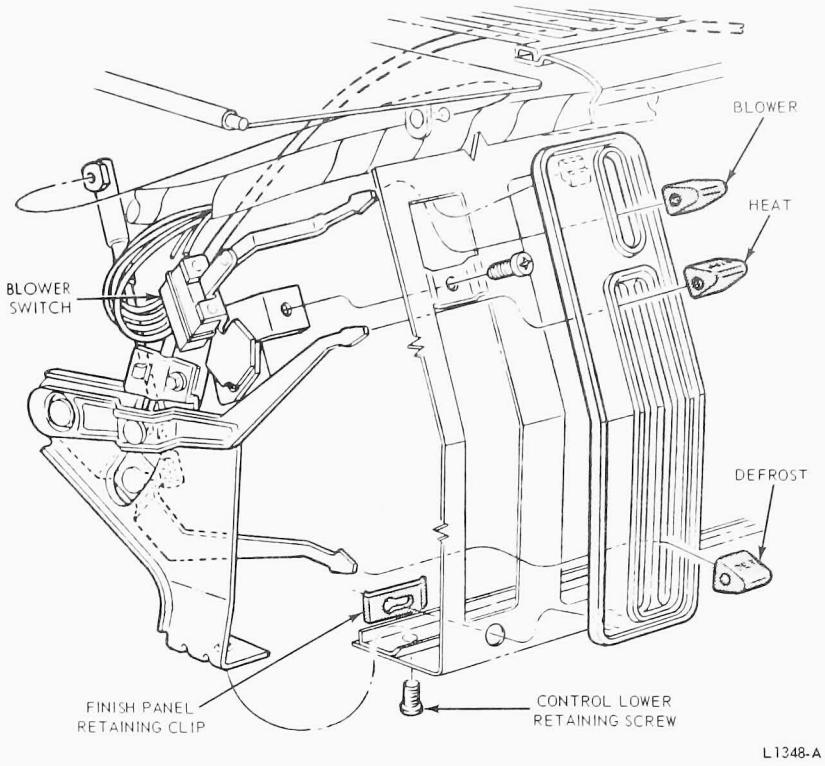

FIG. 2 Heater Control Assembly—Econoline

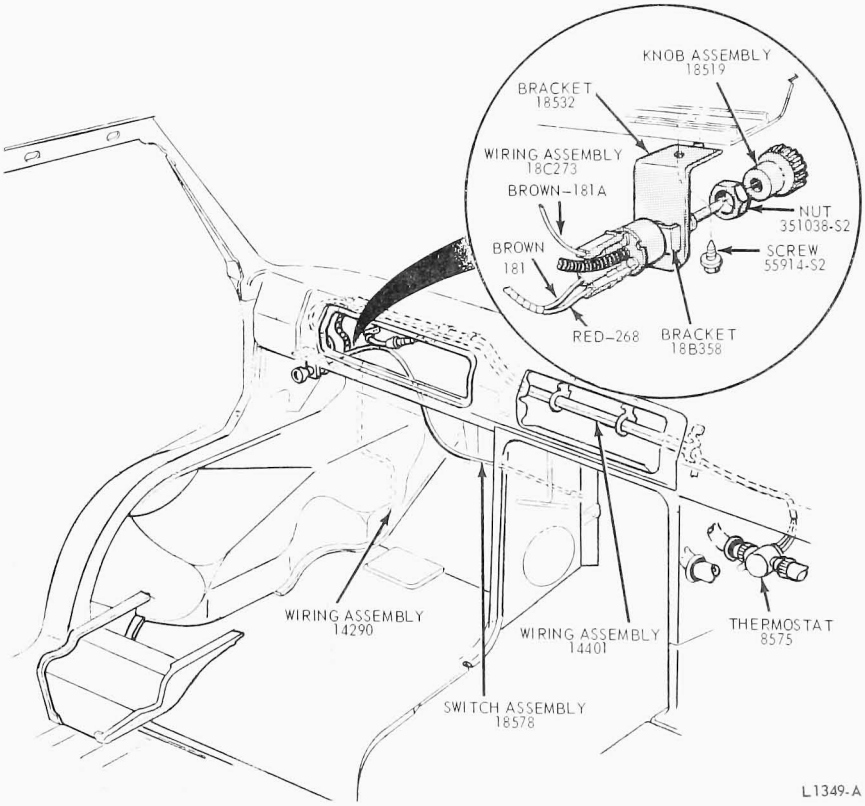

FIG. 3 Auxiliary Heater Control—Econoline

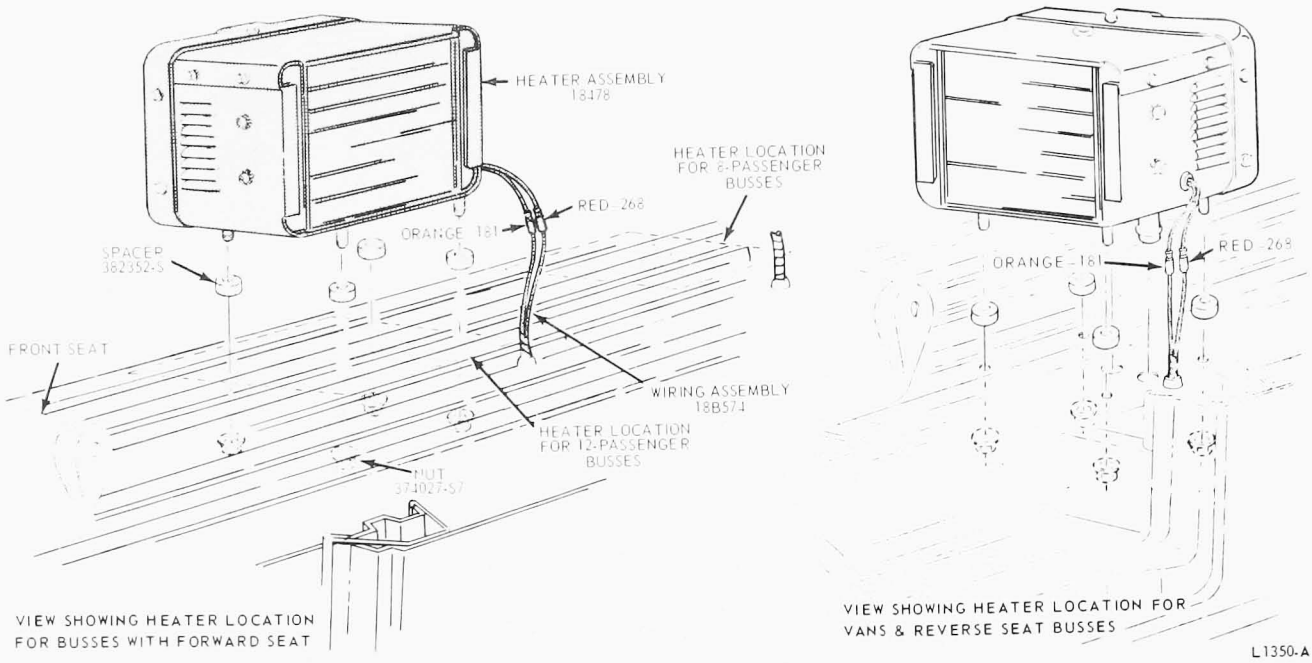

FIG. 4 Auxiliary Heater Installation—Econoline

PART 36-30 Air Conditioning General Service

Applies To All Models

COMPONENT INDEX	Page	COMPONENT INDEX	Page
ADJUSTMENTS		REMOVAL AND INSTALLATION - Cont.	
		Drive Belt	30-15
Charging from Small Containers	30-09	Valve Plate and Head Gasket	30-12
Compressor Oil Level Check	30-10		
Discharging the System	30-08	SPECIFICATIONS	30-15
Evacuating the System	30-08		
Isolating the Compressor	30-11	TESTING	
Charging the System	30-08	A/C Performance Test	30-06
		Blower Motor Test	30-06
DESCRIPTION AND OPERATION		Checking for Leaks	30-05
		Compressor Test	30-04
Air Conditioner Components	30-02	Crankshaft Seal Leak Test–Compressor	30-06
Basic Principles	30-01	Magnetic Clutch Test	30-06
Heater – A/C Systems Control Doors	30-03	Proper Use of Service Valves	30-04
		Receiver – Dryer Test	30-06
REMOVAL AND INSTALLATION		Safety Precautions	30-04
Clutch	30-14	Thermostatic (De-Icing) Switch Test	30-06
Clutch Bearing	30-15	Use of Sight Glass	30-06
Compressor – Econoline	30-11	Visual Inspection	30-04
Compressor – Except Econoline	30-11		
Crankshaft Seal	30-14		

This Part gives the basic principles and service procedures that apply to all Ford Truck Air Conditioning systems. Each of the following parts (beginning with Part 36-40) covers only those procedures that are peculiar to the indicated vehicle system. **Reference both to this Part and to the Part covering the pertinent vehicle line is necessary for complete coverage of any given system.**

DESCRIPTION AND OPERATION

BASIC PRINCIPLES

Truck air conditioning is the cooling or refrigeration of the air in the passenger compartment. Refrigeration is accomplished by making practical use of three laws of nature. These laws of nature and their practical application are outlined in the following paragraphs.

HEAT TRANSFER

If two substances of different temperature are placed near each other, the heat in the warmer substance will always travel to the colder substance until both are of equal temperature. For example, a cake of ice in an ice box does not communicate its coldness to the bottle of milk standing nearby. Rather, in obedience to nature's law, the heat in the warm milk automatically flows into the ice which has a lesser degree of heat.

In order to determine the amount of heat that transfers from one substance to another, science has established a definite standard of measurement called the British Thermal Unit or BTU. One BTU is the amount of heat required to raise the temperature of one pound of water 1 degree F. For example, to raise the temperature of one pound of water from 32 degrees F to 212 degrees F, one BTU of heat must be added for each degree rise in temperature or a total of 180 BTU's of heat. Conversely, in order to lower the temperature of one pound of water from 212 degrees F to 32 degrees F, 180 BTU's of heat must be removed from the water.

LATENT HEAT OF VAPORIZATION

When a liquid boils (changes to a gas) it absorbs heat without raising the temperature of the resulting gas. When the gas condenses (changes back to a liquid), it gives off heat without lowering the temperature of the resulting liquid.

For example, place one pound of water at 32 degrees F in a container over a flame. With each BTU of heat that the

water absorbs from the flame, its temperature rises 1 degree F. Thus, after it has abosrbed 180 BTU's of heat, the water reaches a temperature of 212 degrees F. Here the law of nature is encountered. Even though the flame continues to give its heat to the water, the temperature of the water remains at 212 degrees F. The water, however, starts to boil or change from the liquid to the gaseous state, and it continues to boil until the water has passed off into the atmosphere as vapor. If this vapor were collected in a container and checked with a thermometer, it also would show a temperature of 212 degrees F. In other words, there was a rise of only 180 degrees F (from 32 to 212) in the water and vapor temperature even though the flame applied many more than 180 BTU's of heat. In this case, the heat is absorbed by the liquid in the process of boiling and disappears in the vapor. If the vapor were brought in contact with cool air, the hidden heat would reappear and flow into the cooler air as the vapor condensed back to water. Scientists refer to this natural law as the latent (hidden) heat of vaporization.

Water has a latent heat of vaporization of 970 BTU's and a boiling point of 212 degrees F. This means that one pound of water at 212 degrees F, will absorb 970 BTU's of heat in changing to vapor at 212 degrees F. Conversely, the vapor will give off 970 BTU's of heat in condensing back to water at 212 degrees F.

This tremendous heat transfer, that occurs when a liquid boils or a vapor condenses, forms the basic principle of all conventional refrigeration systems.

For a liquid to be a good refrigerant, the amount of heat that it absorbs when vaporizing is not the only factor. It must also have a low boiling point. That is, the temperature at which it boils must be lower than the substance to be cooled. To illustrate with water, place a bottle of milk at room temperature (70 degrees F) next to boiling water (212 degrees F). The The heat would flow from the (higher temperature) water to the (lower temperature) milk. The milk would be heated rather than cooled, **because the boiling point of water is too high.**

In order to make practical use of the heat transfer that takes place when a liquid boils, we must choose a liquid with a **low boiling point.** Refrigerant 12 is the liquid most commonly used in automotive air conditioning systems because it boils at 21.7 degrees F below zero. Here is a liquid that boils or vaporizes well below passenger compartment temperatures and, in vaporizing, will absorb tremendous amounts of heat without getting any warmer itself.

EFFECT OF PRESSURE ON BOILING OR CONDENSATION

The temperature of a liquid or vapor increases or decreases according to the pressure exerted on it.

In any Ford air conditioning system, liquid refrigerant (R-12) is stored in the receiver under high pressure (Fig. 1). When the liquid R-12 is released into the evaporator by the expansion valve the resulting decrease in pressure lowers its temperature to 21.7 degrees F (below zero), its boiling point. As the R-12 flows **through** the evaporator coils, passenger compartment air passes over the **outside surface** of the coils. As it boils, the R-12 absorbs heat from the air and thus cools the passenger compartment. The heat from the passenger compartment is absorbed by the boiling refrigerant and hidden in the vapor. The refrigeration cycle is now under way. To complete the cycle, the following remains to be done:

(1) Dispose of the heat in the vapor.
(2) Convert the vapor back to liquid for re-use.
(3) Return the liquid to the starting point in the refrigeration cycle.

The compressor (Fig. 1) performs these functions. It pumps the refrigerant (containing the hidden heat) out of the evaporator and forces it under high pressure into the condenser which is located in the outside air stream at the front of the car. The increased pressure in the condenser raises the R-12 vapor temperature to a point higher than that of the outside air. As the heat transfers from the hot vapor to the cooler air, the R-12 condenses back to a liquid. The liquid under high pressure now returns to the reservoir where it is stored for re-use.

It may seem difficult to understand how heat can be transferred from a comparatively cooler passenger compartment to the hot outside air. The answer lies in the difference between the refrigerant pressure that exists in the evaporator and the pressure that exists in the condenser. In the evaporator, the expansion valve reduces the pressure and thereby reduces the boiling point below the temperature of the passenger compartment. Thus, heat transfers from the passenger compartment to the boiling refrigerant. In the condenser, the compressor raises the condensation point above the temperature of the outside air. Thus, the heat transfers from the condensing refrigerant to the outside air. The expansion valve and the compressor simply create pressure conditions that permit the laws of nature to function.

AIR CONDITIONER COMPONENTS

RECEIVER UNIT

The air conditioning system stores

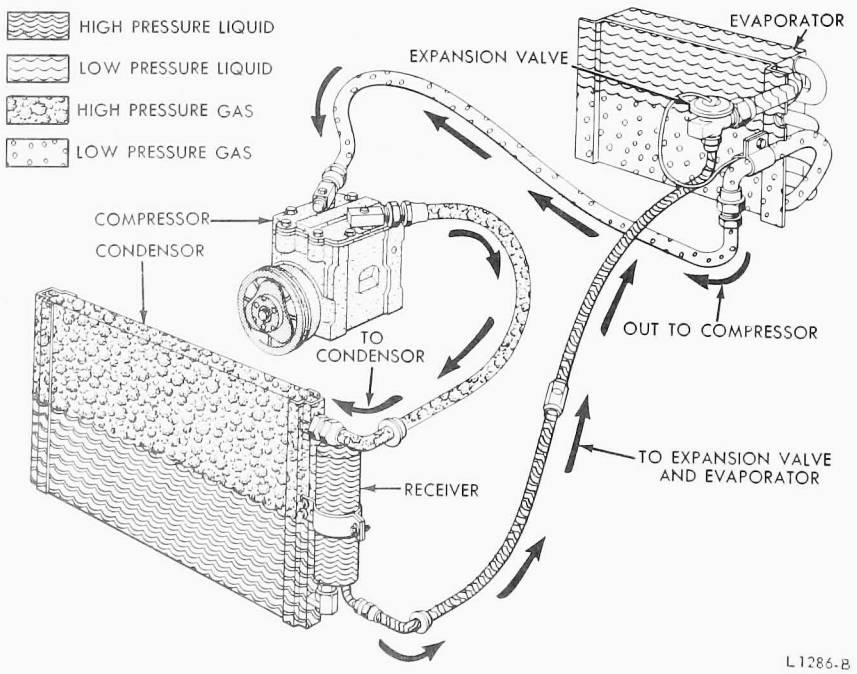

FIG. 1 Typical A/C Basic System

the liquid Refrigerant-12 under pressure in a combination receiver and dehydrator (Fig. 1). The pressure in the receiver normally varies from about 80 to 300 psi, depending on the surrounding air temperature and compressor speed.

The dehydrator serves the purpose of removing any traces of moisture that may have accumulated in the system. Even small amounts of moisture will cause an air cooling unit to malfunction. A fusible plug is screwed into the receiver. This will release the refrigerant before the refrigerant temperature exceeds 212 degrees F.

EVAPORATOR UNIT

When the cooling system is in operation, the liquid Refrigerant-12 flows from the combination receiver and dehydrator unit through a flexible hose to the evaporator (Fig. 1) where it is allowed to evaporate at a reduced pressure, to cool the evaporator. Air is blown through the evaporator fins and is thus cooled by the evaporator.

EXPANSION VALVE

The rate of refrigerant evaporation is controlled by an expansion valve (Fig. 1) which allows only enough refrigerant to flow into the evaporator to keep the evaporator operating efficiently, depending on its heat load.

The expansion valve on C-and W-Series Trucks consists of the valve and a temperature sensing capillary tube and bulb. The bulb is clamped to the outlet pipe of the evaporator. The expansion valve used on all except Cand W-Series is connected in line with both the inlet and outlet evaporator refrigerant lines. By use of internal passages leading to and from the underside of the valve diaphragm, the diaphragm senses the refrigerant temperature and pressure as it leaves the evaporator core. Thus the valve is controlled by evaporator outlet temperature.

The restricting effect of the expansion valve at the evaporator causes a low pressure on the low pressure side of the system of 12 to 50 psi, depending on the surrounding air temperature and compressor speed.

COMPRESSOR UNIT

The evaporated refrigerant leaving the evaporator (now in the form of a gas) at a pressure of 12 to 50 psi is pumped by the compressor, located on the engine (Fig. 2), into the top of the condenser.

The compressor maintains a pressure on its high pressure side of from 80 to 300 psi, depending on the surrounding air temperature and compressor speed.

CONDENSER

The air conditioning condenser is located in front of the radiator on light trucks and Econoline. On the C-, L-and W-Series, it is mounted on the cab roof. The condenser receives compressed (therefore heated) refrigerant gas from the compressor.

As the hot refrigerant gas flows down through the condenser, it is cooled by air passing between the sections of the condenser. The cooled, compressed refrigerant gas condenses to liquid refrigerant which then flows into the receiver.

LIQUID SIGHT GLASS

A liquid sight glass is mounted in the high pressure refrigerant line between the receiver and the expansion valve (Fig. 1). The sight glass is used to check whether there is enough liquid refrigerant in the system.

MAGNETIC CLUTCH

The compressor is cut in and out of operation by an electrically operated magnetic clutch mounted on the compressor crankshaft. The magnetic clutch is connected in series with the blower switch and the thermostatic de-icing switch.

THERMOSTATIC (DE-ICING) SWITCH

The thermostatic (de-icing) switch is controlled both manually and automatically. It is manually cut in or out of the clutch circuit by the temperature control lever or knob. With the temperature control in A/C position and the blower motor switch ON, the magnetic clutch is controlled through the automatic action of the switch. The temperature sensing tube of the switch is placed in contact with the evaporator fins. When the temperature of the evaporator becomes too cold, the switch opens the magnetic clutch electrical circuit, disconnecting the compressor from the engine. When the temperature of the evaporator rises, the thermostatic (de-icing) switch closes and energizes the magnetic clutch. This connects the compressor to the engine, and cooling action begins again.

When the blower switch is off or the temperature control lever or knob is **not in an A/C position, the magnetic clutch cannot be energized for compressor operation.**

SERVICE VALVES

The service valves on the compressor are used to test and service the cooling system (Fig. 3). The high pressure service valve, mounted at the outlet to the compressor, allows access to the high pressure side of the system for attaching a service hose with attached pressure gauge.

The low pressure valve, mounted at the inlet to the compressor, allows access to the low pressure side of the system for attaching a service hose with attached pressure gauge.

Both service valves may be used to shut off the rest of the system from the compressor during compressor service.

HEATER-A/C SYSTEMS CONTROL DOORS

With all Ford heater-A/C systems, outside air comes through an opening at the upper cowl and into the right end of the evaporator and blower assembly. All evaporator and blower assemblies on all except Econoline and C-Series Trucks contain:

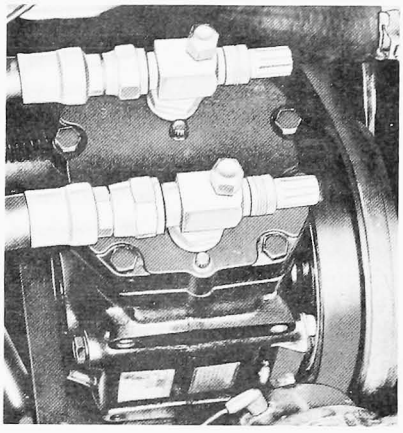

L1287-A

FIG. 2 Compressor Installed

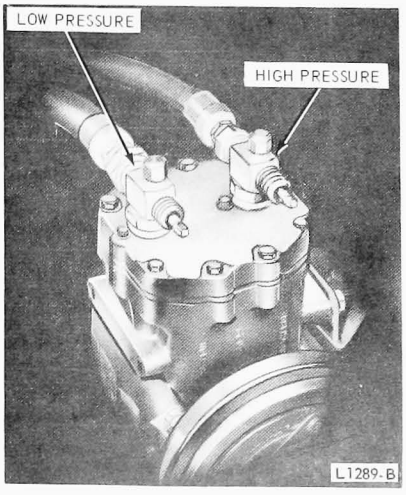

FIG. 3 Service Valves

1. An evaporator core through which flows Refrigerant-12.
2. A heater core through which flows engine coolant.
3. A blower which forces air through the evaporator core, through the heater core, and out through various outlets.
4. Several control doors.

The evaporator assembly on Econoline and C-Series Trucks does not contain a heater core, Item (2) above. For the separate heating systems, see Parts 36-20 and 23.

The control doors determine the following functions:

1. Whether outside air or inside (recirculating) air goes through the system.
2. The amount of air that goes through the heater core.
3. The particular outlet(s) through which the air discharges.

TESTING

SAFETY PRECAUTIONS

The refrigerant used in the air conditioner system is Refrigerant-12. Refrigerant-12 is non-explosive, non-inflammable, noncorrosive, has practically no odor, and is heavier than air. Although it is classified as a safe refrigerant, certain precautions must be observed to protect the parts involved and the person who is working on the unit.

Use only Refrigerant-12. Do not use refrigerant that was canned for pressure operated accessories (such as boat air horns). This type is not pure Refrigerant-12 and will cause a malfunction.

Liquid Refrigerant-12, at normal atmospheric pressures and temperatures, evaporates so quickly that it has the tendency to freeze anything it contacts. For this reason, **be very careful to prevent any liquid refrigerant from coming in contact with the skin and especially the eyes.**

Refrigerant-12 is readily absorbed by most types of oil. It is therefore recommended that a bottle of sterile mineral oil and a quantity of weak boric acid solution be kept nearby when servicing the air conditioning system. **Should any liquid refrigerant get into the eyes, immediately use a few drops of mineral oil to wash them out, then wash the eyes clean with the weak boric acid solution. Seek a doctor's aid immediately even though irritation may have ceased.**

Always wear safety goggles when servicing any part of the refrigerant system.

The Refrigerant-12 in the system is always under pressure. Because the system is tightly sealed, heat applied to any part would cause this pressure to build up excessively.

To avoid a dangerous explosion, never weld, use a blow torch, solder, steam clean, bake body finishes, or use any excessive amount of heat on or in the immediate area of any part of the air cooling system or refrigerant supply tank, while they are closed to the atmosphere whether filled with refrigerant or not.

The liquid refrigerant evaporates so rapidly that the resulting refrigerant gas will displace the air surrounding the area where the refrigerant is released. To prevent possible suffocation in enclosed areas, always discharge tthe refrigerant from an air cooling system into the garage exhaust collector. Always maintain good ventilation surrounding the work area.

Although Refrigerant-12 gas, under normal conditions, is nonpoisonous, the discharge of refrigerant gas near an open flame can produce a very poisonous gas. This gas will also attack all bright metal surfaces. This poisonous gas is generated when the flame-type leak detector is used. **Avoid inhaling the fums from the leak detector. Make certain that Refrigerant-12 is both stored and installed in accordance with all state and local ordinances.**

When admitting Refrigerant-12 gas into the cooling unit, always keep the tank in an upright position. If the tank is on its side or upside down, liquid Refrigerant-12 will enter the system and damage the compressor. In surrounding air temperatures above 90 degrees F, prolonged engine idle will result in excessively high compressor pressures.

VISUAL INSPECTION

Obstructed air passages, broken belts, disconnected or broken wires, loose clutch, loose or broken mounting brackets may be determined by visual inspection of the parts.

PROPER USE OF SERVICE VALVES

The service valves (Fig. 4) are used throughout the service procedures in this section and in the following, Adjustments.

When in the **Back-Seated** position, both valves are cut off from the gauge manifold; the low pressure valve is open between the suction side of the compressor and the evaporator; and the high pressure valve is open between the discharge side of the compressor and the condenser. This is the normal operating position.

In the **Front-Seated** position, the low pressure valve cuts off the suction side of the compressor from the evaporator; and the high pressure valve cuts off the discharge side of the compressor from the condenser.

In the **Mid-Position,** the valves are open between the gauge manifold, the cooling system, and the compressor. This is the position used in performing various tests and service operations.

COMPRESSOR TEST

1. Attach the manifold gauge set (Fig. 5). It will not be necessary to attach the Refrigerant-12 tank or the vacuum pump.
2. Set both manifold gauge valves at full clockwise (closed) position.
3. Turn the low pressure service valve to the Front-Seated (full clockwise) position, and turn the high pressure service valve to the Back-Seated (full counterclockwise) position (Fig. 4).
4. With the engine running at idle speed, set the A/C controls to maximum cooling (to engage the compressor clutch) **for 30 seconds only. Then, to avoid damaging the compressor, quickly disengage the clutch by returning the A/C controls to OFF**

The low pressure (suction) gauge should reach 20-inches of vacuum within the 30 seconds of operation and should remain below zero psi for at least one minute.

If the compressor does not satisfy these two conditions after at least 3 cycles of clutch engagement, the compressor has either a blown head gasket or leaking valves. Remove the

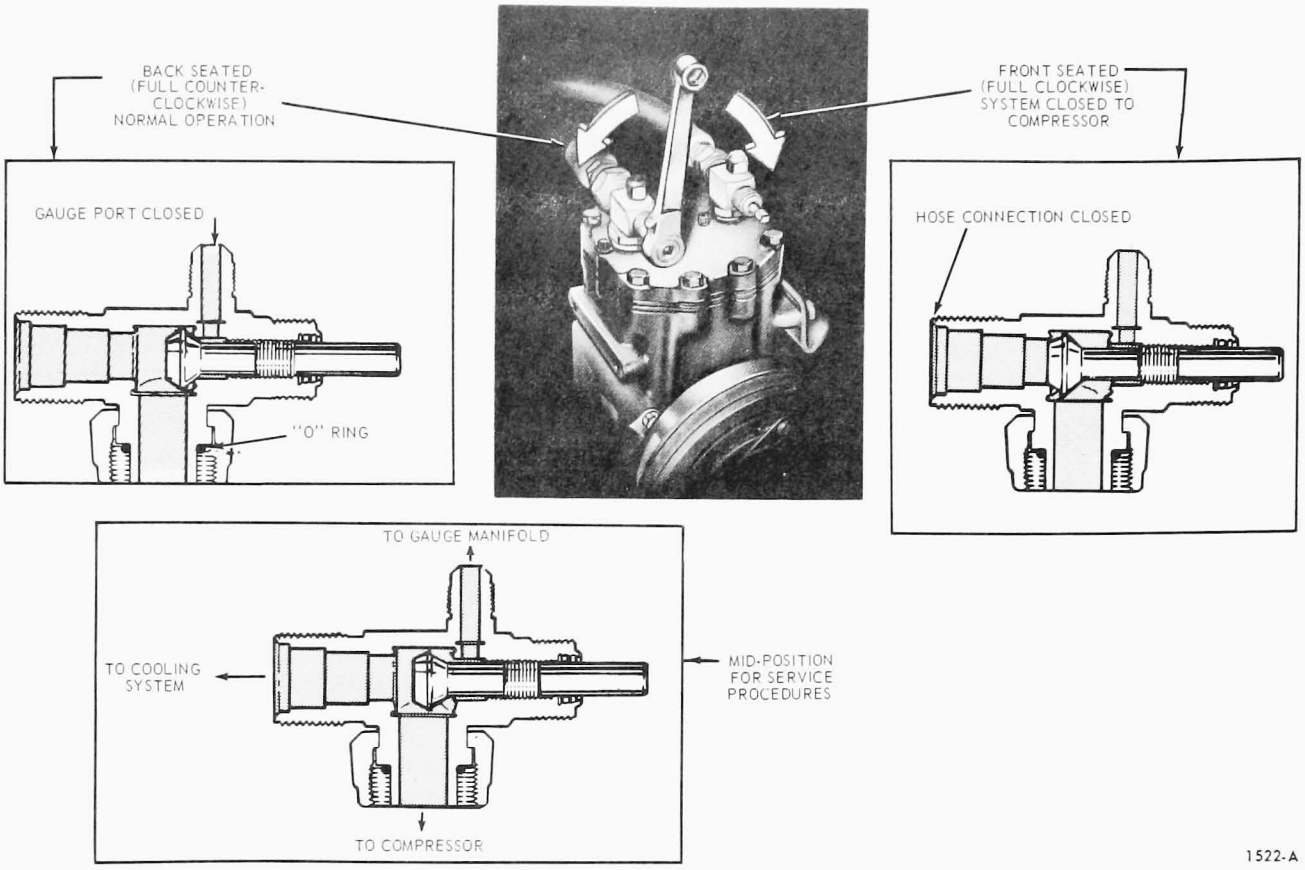

FIG. 4 Service Valve Positions

head and inspect the valve plate and gaskets for damage. Replace parts if necessary. Replace a compressor, if the cylinder walls are scored or pieces of metal are inbedded in the pistons.

CHECKING FOR LEAKS

Attach the manifold gauge set (Fig. 5). Leave both manifold gauge valves at the maximum clockwise position. Set both service valves at the center position. Both gauges should show approximately 60 to 80 pounds pressure at 75 degrees F with the engine not running. If very little or no pressure is indicated, leave the vacuum pump valve closed, open the Refrigerant-12 tank valve, and set the low pressure (suction) manifold gauge valve to the counterclockwise position. This opens the system to tank pressure. Check all connections, and the compressor head gasket, oil filler plug, and shaft seal for leaks, using a flame-type leak detector (Fig. 6). **Avoid inhaling the fumes from the leak detector.** Follow the directions with the leak detector. The smaller the flame the more sensitive it is to leaks.

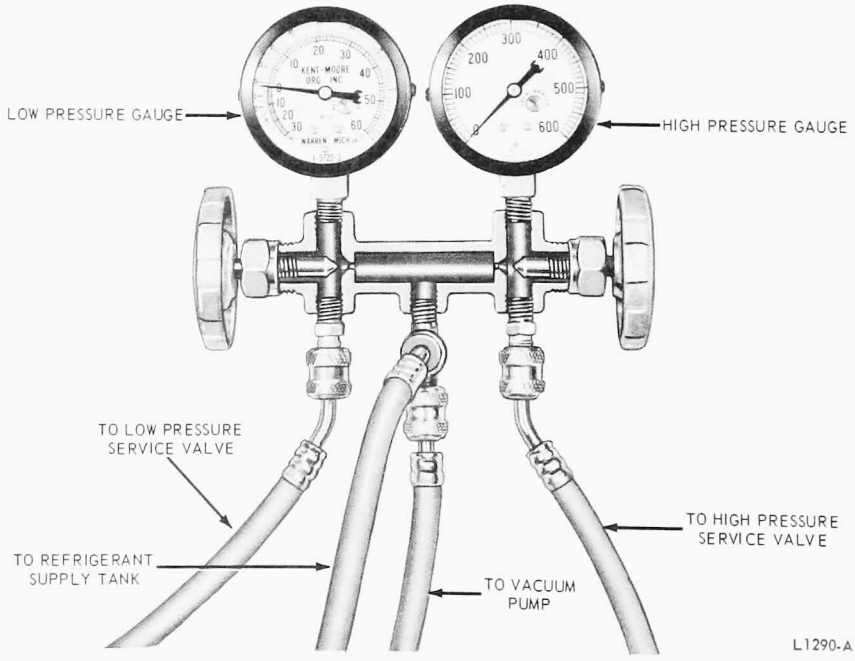

FIG. 5 Manifold Gauge Set

Therefore, to insure accurate leak indication keep the flame as small as possible. The copper element must be red hot. If it is burned away, replace the element. Hold the open end of the hose below each suspected leak point for two or three seconds. The flame will normally be almost colorless. The slightest leak will be indicated by a bright green blue color to the flame. Be sure to check the manifold gauge set and hoses for leaks as well as the rest of the system.

If the surrounding air is contaminated with refrigerant gas, the leak detector will indicate this gas all the time. Good ventilation is necessary to prevent this situation. A fan, even in a well ventilated area, is very helpful in removing small traces of refrigerant vapor.

USE OF SIGHT GLASS

Clean the sight glass before checking for a proper charge of refrigerant. Then, observe the sight glass for bubbles with the engine running at 1500 rpm and the A/C controls set at maximum cooling. A continuous or large amount of bubbles in the sight glass indicate an undercharge of refrigerant. If an undercharge of refrigerant is found, check the system for leaks. Repair any leaks, evacuate the system with a good vacuum pump, and charge the system with the proper amount of Refrigerant-12.

No bubbles in the sight glass immediately after clutch engagement indicate either too much refrigerant or a complete loss of refrigerant. While observing the sight glass, cycle the magnetic clutch off and on, with the engine running at 1500 rpm. If refrigerant is in the system, bubbles will appear while the clutch is off and disappear when the clutch is on. If no bubbles appear during the on and off cycle of the magnetic clutch, there is no refrigerant in the system. If there is no refrigerant in the system, it will be necessary to leak test, repair as required, and charge the system. **Under conditions of extremely high temperatures, occasional foam or bubbles may appear in the sight glass.**

AIR CONDITIONER PERFORMANCE TEST

The pressures developed on the high pressure (discharge) and low pressure (suction) side of the compressor indicate whether or not the system is operating properly.

Attach the manifold gauge set (Fig. 5). It will not be necessary to attach the Refrigerant-12 tank. Set both manifold gauge valves at the maximum clockwise, or closed, position. Set both service valves at the center position.

Check the system pressures with the engine running at 1500 rpm, all controls set for maximum cooling, and the front of the vehicle at least 5 feet from any wall.

The actual pressures indicated on the gauges will depend on the temperature of the surrounding air and the humidity. Higher air temperatures along with high humidity, will give higher system pressures.

At idle speed and a surrounding air temperature of 100 to 110 degrees F, the high pressure may go as high as 300 pounds or more. If it becomes necessary to operate the air conditioner under these conditions, keep the high pressure down with a fan directed at the condenser and radiator.

Correct pressures for a normally operating system are shown on line (1) in the Refrigerant System Analysis Chart (Fig. 7): the low pressure gauge should indicate 10 to 20 psi; the high pressure gauge should indicate 180 to 225 psi. Lines 2 through 8 in Fig. 7 show various abnormal pressure conditions and the possible problems that could be their cause.

THERMOSTATIC DE-ICING SWITCH TEST

Fill a container with crushed ice, salt and water. Put enough salt in the water so that the temperature of the solution is 25 degrees F or lower.

Use a self-powered test light or ohmmeter connected to the switch terminals to check whether or not the switch is closed.

Place the sensing tube in the ice, salt and water solution. **Make certain that no salt water gets into the control.** The thermostatic (de-icing) switch contact points should open and remain open while the tube is in the solution. Remove the sensing tube from the solution. As the tube warms up, the switch contacts should close. If the switch contacts do not open and close as indicated, replace the switch.

An ohmmeter check of the contacts should show a resistance of less than an ohm. If a resistance of one ohm or more occurs, replace the switch.

RECEIVER—DRYER TEST

Operate the air conditioner for about five minutes; then, slowly move your hand across the length of the unit from one end to the other. There should be no noticeable difference in temperature. If cold spots are felt, it indicates that the unit is restricting the refrigerant flow, and the receiver-dryer must be replaced.

MAGNETIC CLUTCH TEST

Disconnect the magnetic clutch wire at the bullet connector, and connect it to the negative lead of an ammeter. Connect the positive lead of the ammeter to the battery positive terminal. The magnetic clutch should pull in with a distinct click and the current reading on the ammeter should be to specification.

BLOWER MOTOR TEST

Disconnect the blower motor wire at the bullet connector, and connect it to the negative lead of an ammeter. Connect the positive lead of the ammeter to the battery positive terminal. The motor should operate and the reading on the ammeter should be to specification.

COMPRESSOR CRANKSHAFT SEAL LEAK TEST

The cross sectional view in Fig. 8 shows the design and the components of the seal assembly. Oil leak problems can

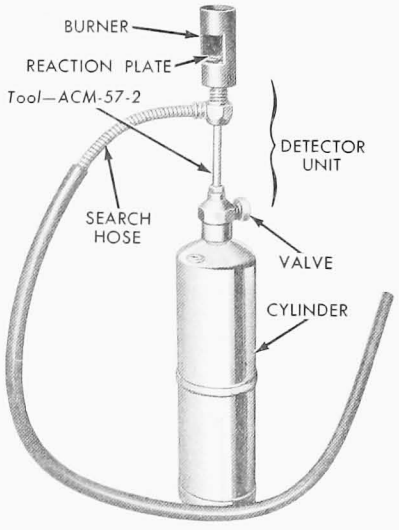

FIG. 6 Torch Type Leak Detector

Low Press (Suction) Gauge	High Press (Discharge) Gauge	Problem
(1) 10-20 psi	180-225 psi	Normal
(2) Normal	Too High	Restriction in line. Plugged Condenser { Look for frost ring. Radiator Overheating. Air in System. Engine fan too small – or Viscous fan (Fluid Clutch) Inoperative. Condenser Blower Not Operating (Trucks Only).
(3) Too High	Too High	Condenser Blower Not Operating (Trucks Only). Very hot shop, no auxiliary fan directed toward condenser. Restricted air flow through condenser. Overcharged system.

Low Press (Suction) Gauge	High Press Discharge) Gauge	Problem
(4) Too High	Too Low	Compressor head gasket blown.
(5) Too Low	Too Low	Undercharged system.
(6) Vacuum	Normal	Expansion valve stuck closed. Plugged receiver (see Note). Iced up (Moisture in System).
(7) Too High	Normal	Capillary tube temperature sensing bulb uncovered and exposed to engine compartment heat.
(8) Normal (Complaint of Intermittent cooling)	Normal	Moisture in system, passes critical point and clears up but freezes again.
NOTE: If the condenser is hot from top to bottom and the receiver is hot but the receiver outlet line is cool, the receiver desiccant is restricted. Replace the receiver.		

CL 1521-A

FIG. 7 Refrigerant System Analysis Chart

be identified by observing the three possible leakage paths shown in Fig. 9.

OIL LEAKAGE PAST CARBON RING

Oil weepage through the carbon ring forming a streak or drip pattern as shown in the left illustration of Fig. 9 is considered normal. However, if oil is present on the surface of the compressor beyond the clutch or has sprayed on the hood and surrounding brackets, the leakage is excessive. Replace the seal assembly.

OIL LEAKAGE THROUGH O-RING

Leakage through the O-ring type gasket on the cover plate (center illustration, Fig. 9) indicates possible cracked, pinched, split or loose mounting screws. Check the screws for good condition and proper torque (7 to 13 ft-lbs). If there is heavy oil discharge with screws of good condition and correct torque, replace the oil seal assembly.

OIL LEAKAGE THROUGH DAMAGED BELLOWS

Oil will leak through the rubber bellows as shown in the right illustration of Fig. 9, if the bellows distorts or cracks due to heat, a large discharge of oil on the front of the compressor beyond the clutch indicates this type of leakage. Replace the oil seal assembly.

REFRIGERANT 12 LEAKAGE

Refrigerant 12 leakage through any part of the seal can be determined only by a leak detector. **Avoid inhaling the fumes from the leak detector.** Be sure to wipe all the oil away from the seal area before using the leak detector, because

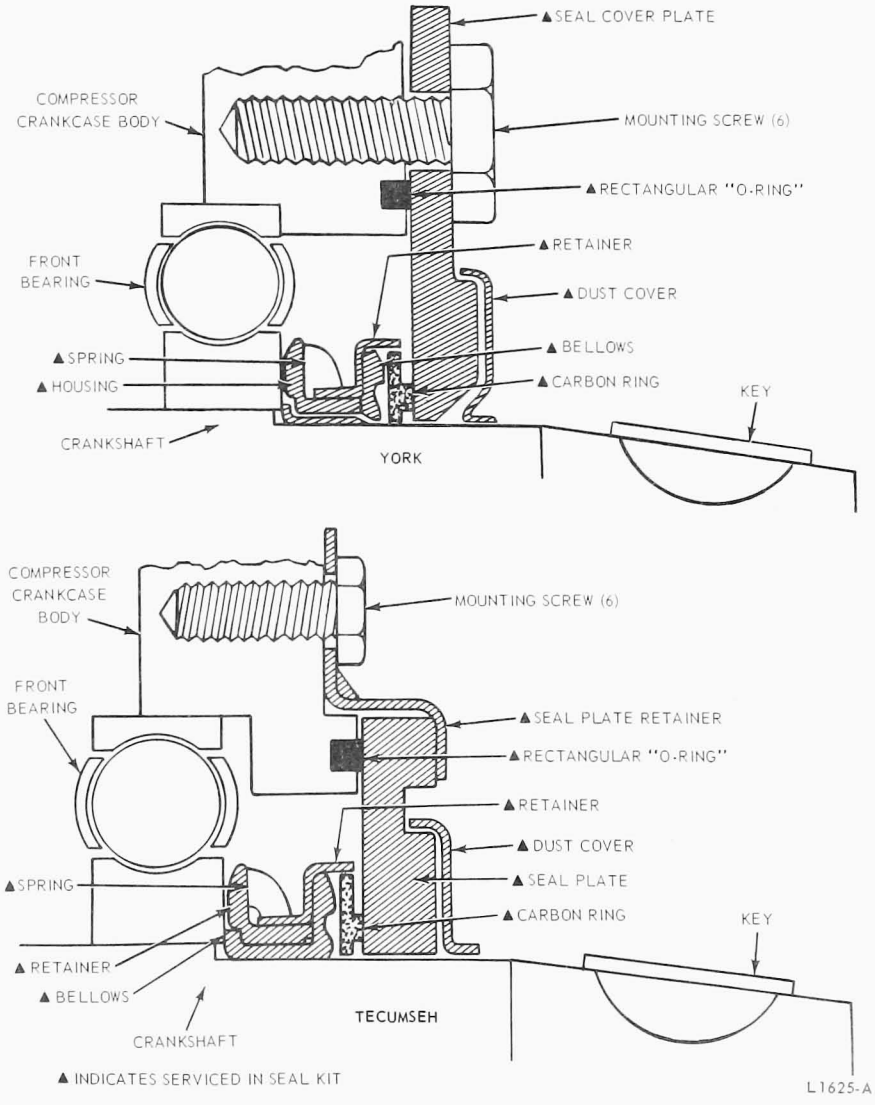

FIG. 8 Compressor Oil Seal—Cross Sectional View

the oil may contain refrigerant which would give erroneous readings. If refrigerant leakage at the seal exceeds 1 oz. per year, replace the seal as outlined in Disassembly and Assembly.

If no leak is found at the compressor crankshaft seal, thoroughly check all system fittings and lines for leaks as outlined in this Section.

ADJUSTMENTS

DISCHARGING THE SYSTEM

Discharge the refrigerant from the system before replacing any part of the system, except the compressor.

To discharge the system, connect the manifold gauge set to the system (Fig. 5). Do not connect the manifold center connection hoses to the Refrigerant-12 tank or to the vacuum pump. Place the open end of these hoses in a garage exhaust outlet. Set both manifold gauge valves at the maximum counterclockwise or open position. Open both service valves a slight amount (Fig. 3) and allow the refrigerant to discharge slowly from the system.

Do not allow the refrigerant to rush out, because it will carry the compressor oil out with it.

EVACUATING THE SYSTEM

Attach the manifold gauge set, a tank of Refrigerant-12 and a vacuum pump to the system (Fig. 5). The refrigerant 12 tank should be set on a scale and its weight noted so that the proper amount of refrigerant will enter the system during charging. Make certain that the Refrigerant-12 tank valve is tightly closed. Set both service valves to the mid-position (Fig. 4). Open both manifold valves (Fig. 5). To release any pressure remaining in the system after discharging, loosen a hose connection. Then retighten all connections. Open the vacuum pump valve and run the pump until the low pressure gauge reads at least 25-inches, and as close to 30 inches of vacuum as possible. Continue vacuum pump operation for 20 to 30 minutes to boil any moisture out of the system. Close the pump valve. Turn off the pump.

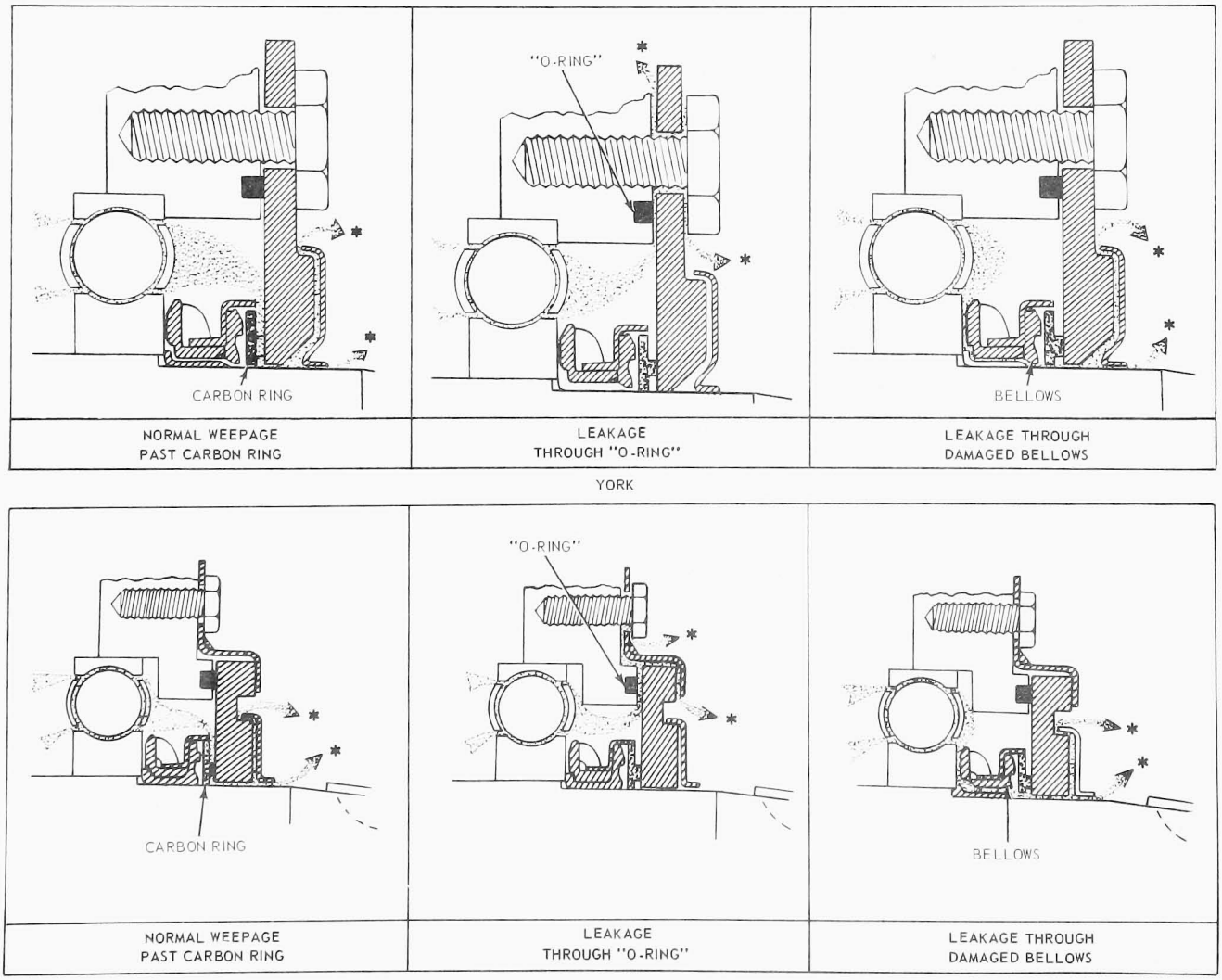

FIG. 9 Oil Leakage Paths—Compressor Oil Seal

CHARGING THE SYSTEM

1. Evacuate the system as outlined in the foregoing procedure.

Be sure to subtract the specified charge from the weight of the tank as registered on the scale so that you will know when to stop charging. For example, if the scale shows a total weight of 8 pounds and the specified charge is 2 1/2 pounds, you should stop charging when the scale shows 5 1/2 pounds.

2. Leave both service valves at the mid-position (Fig. 10) and the vacuum pump valve closed.
3. Leave the low pressure (suction) manifold gauge valve at the full counterclockwise or open position (Fig. 5).
4. **Set the high pressure (discharge) manifold gauge valve at the full clockwise or closed position.**
5. Open the Refrigerant-12 tank valve to allow refrigerant to enter the system, and observe the gauges. When both gauges reach 60 to 80 pounds at approximately 75 degrees F, shut off the tank valve.
6. Perform the leak test with the leak detector as outlined in Testing in this Part.
7. Set the temperature control at the maximum COLD position, the mode control at the PANEL position and set the blower switch at HI speed.
8. Start the engine, and open the R-12 tank valve again to prevent drawing vacuum on the suction side. When the suction gauge shows pressure instead of vacuum, close the R-12 tank valve.
9. Run the engine at 1500 rpm for about ten minutes or until both gauge readings have stabilized. If the clutch disengages during the stabilization process, continue running the engine until the pressures again stabilize after the clutch re-engages.
10. With the engine still running, open the R-12 tank and charge the system until the scale indicates that the specified weight of R-12 refrigerant has entered the system. Then close the valve.
11. If the refrigerant will not enter the system due to low temperature, it may be necessary to place the Refrigerant-12 tank in a container of hot water at about 150 degrees F. This will increase the R-12 pressure and force the gas from the tank during charging. **Never heat the Refrigerant-12 tank with a torch. A dangerous explosion may result.**

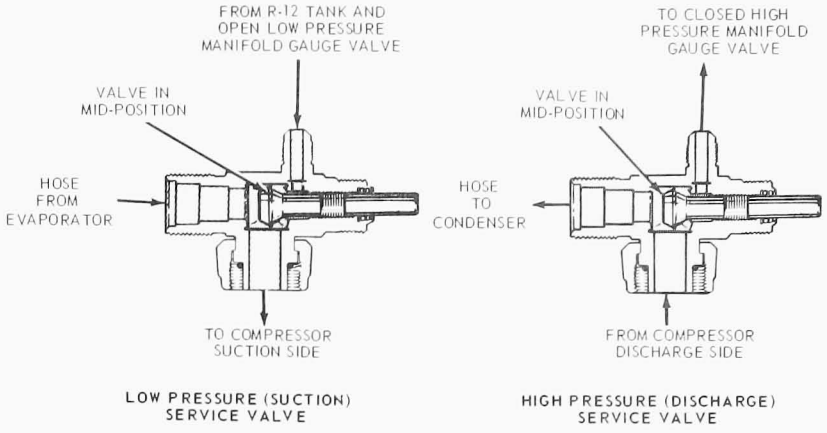

FIG. 10 Charging the Air Conditioning System

12. During the charging, the high pressure (discharge) side may build up to an excessive value. This can be caused by an overcharge of refrigerant, or an overheated engine, in combination with high surrounding temperatures. Never allow the high pressure to exceed 240 pounds while charging. Stop the engine, determine the cause, and correct it.
13. After the proper charge has been made, close the Refrigerant-12 tank valve, and check the system pressures for proper operation as described under Air Conditioner Performance Test, Testing in this Part.
14. After satisfactory operation has been achieved, set both service valves at the maximum counterclockwise (gauge port closed) position (Fig. 4). Remove the gauge set, and cap the service valve gauge ports and valve stems.

CHARGING FROM SMALL CONTAINERS

Refrigerant-12 is available in one-pound cans. **Do not open the high pressure (discharge) gauge valve on the manifold because the container can explode.**

1. A special valve and valve retainer is required for connecting the small can to the A/C system. Attach the valve retainer to the can by engaging the three tabs of the retainer to the lip at the top of the can. Turn the valve assembly into the threaded hole in the center of the valve retainer. In containers where the center of the can is deeply recessed, a washer should be inserted before installing the valve.

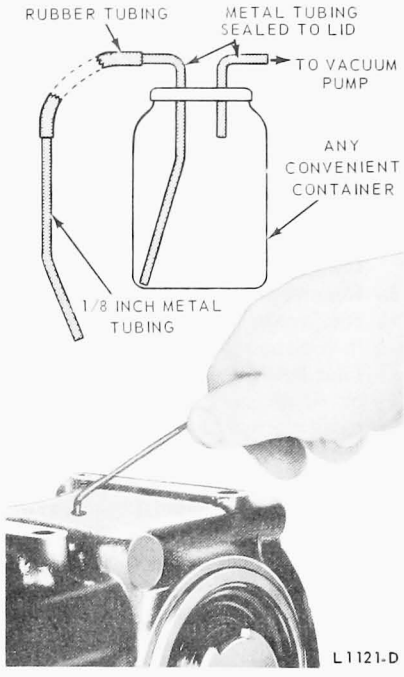

FIG. 11 Compressor Oil Level Check and Oil Trap

2. Connect the manifold gauge set to the system (Fig. 6). Connect the hose (normally connected to the large R-12 tank) to the special valve on the small can. **Make sure that the valve is closed (full clockwise position).**
3. Once the can is connected, charge the system as outlined in the foregoing procedure. When the can is empty, close the valve and remove the empty can. Connect a new can, open the valve again and continue charging until the specified weight of R-12 has entered the system.

When you need a half pound of refrigerant such as with a 2 1/2 pound charge capacity, stop charging from one

can when extreme cold is felt half-way down the can. Weigh the can to make sure one-half pound of refrigerant is installed.

COMPRESSOR OIL LEVEL CHECK

Under normal conditions, when the air conditioning system is operating satisfactorily, the compressor oil level need not be checked. There is no place for the oil to go except inside the sealed system. When the engine is first started, some of the oil will be pumped into the rest of the refrigerant system. After several minutes of operation, most of the oil is returned to the compressor crankcase.

Check the compressor oil level only if any portion of the refrigerant system is being replaced, or if there was a leak in the system and the refrigerant is being replaced.

1. After the system has been charged, operate the system for about ten minutes or until the pressures have been stabilized in a surrounding temperature of 60 degrees or above.
2. Stop the engine and isolate the compressor as outlined in the following procedure, Isolating the Compressor.
3. Remove the oil filler plug from the compressor. Insert a flattened 1/8-inch diameter rod (Fig. 11) in the oil filler hole until it bottoms. The rod or dipstick fashioned for the particular compressor (Figs. 12 and 13) should be used. **The dipstick must be wiped completely clean before insertion.** If necessary, **slightly** rotate the compressor crankshaft by hand so that the dipstick will clear the crankshaft.

On horizontally mounted compressors, the oil check hole is located on the side of the crankcase that faces up. On the opposite or downward side, there is a corresponding boss provided on the inner wall as an alternate oil check hole for a different mounting. When checking the oil level on such a compressor, angle the dipstick so that it bottoms against the lower side of the crankcase and not against the boss.

4. Pull out the dipstick, and check the oil indication. It should show at least the minimum amount of oil as indicated in Figs. 12 and 13.

If the oil level is low, add ESA-M2C31-A (Ford Part No. C9AZ-19577-A) oil.

If too much oil is indicated proceed as follows:

a. Draw out all of the oil using a trap similar to that shown in Fig. 11, or remove the compressor from the vehicle and pour the oil out of the crankcase.

b. Add approximately 4 oz. of oil to the crankcase, and replace the filler plug. Reinstall the compressor, if it was removed.

5. Evacuate the compressor with the vacuum pump (both service valves front-seated (Fig. 4) and both manifold gauge valves open).
6. Connect the compressor back into the system by turning both service valves to the back-seated (full counterclockwise) position.
7. Operate the system again for another 10 minutes as in Step 1,-and recheck the oil level as in Steps 3 and 4.

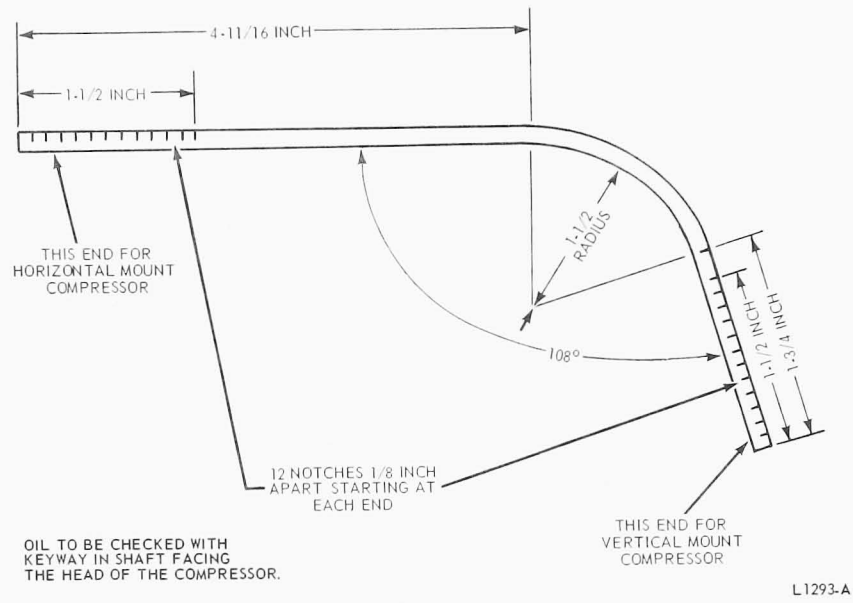

FIG. 12 York Compressor Oil Level Dipstick

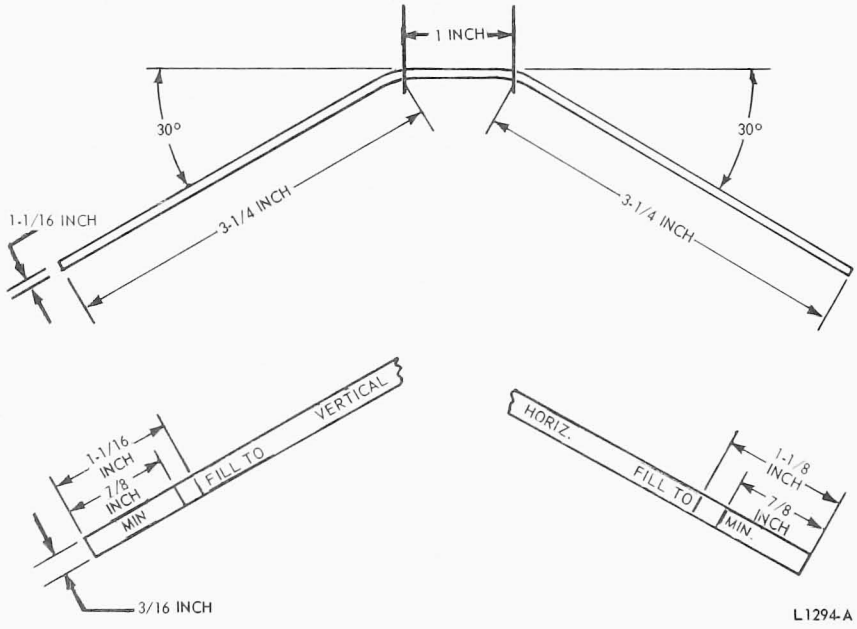

FIG. 13 Tecumseh Compressor Oil Level Dipstick

8. Replace the oil filler plug. Evacuate and connect the compressor back into the system.
9. Operate the system again for five minutes and make a final oil level check.

It is necessary to recheck the oil level a second time to be sure that all the oil has returned to the compressor.

10. Replace the oil filler plug. Evacuate and connect the compressor back into the system.
11. Check the compressor filler plug area for leaks with a leak detector.

ISOLATING THE COMPRESSOR

This procedure is used when checking the compressor oil level and when it is desired to replace the compressor without losing the refrigerant charge.

To isolate the compressor from the system, turn both the high and the low pressure service valves to the extreme clockwise (frontseat) position (Fig. 4). Loosen the cap on the high pressure service valve gauge port, and allow the gas to escape until the compressor is relieved of refrigerant pressure.

Loosen the cap a small amount only, and do not remove it until the pressure is completely relieved.

To connect the compressor back into the system, evacuate the compressor with a vacuum pump at both service valve gauge ports, close the vacuum pump valve, turn both service valves to the maximum counterclockwise (back-seat) position, and cap the high pressure service valve gauge port and service valve stems.

REMOVAL AND INSTALLATION

COMPRESSOR—ALL EXCEPT ECONOLINE

All compressor removal and installation operations, except belt replacement, can be performed only after the unit has been isolated from the rest of the system. (See Adjustments, in this part).

To reduce the amount of time to make a compressor replacement, the service compressors are dehydrated and filled with refrigerant (R-12) and the proper amount of the specified refrigerant oil is in the crankcase when received.

When replacing a compressor, the oil level in the old compressor should be checked. Then the right amount of oil should be removed from the new compressor so that the level in the new compressor is the same as that in the old compressor. This keeps the amount of oil in the system a constant. Failure to use this procedure is the most common reason for excessive oil in the crankcase. Refer to Compressor Oil Level Check, Adjustments in this part.

Removal

1. Isolate the compressor. Refer to Adjustments in this Part, and disconnect the two service valves and hoses from the compressor (Fig. 14). Energize the clutch and loosen and remove the clutch mounting bolt.
2. Install a 5/8-11 bolt in the clutch drive shaft hole. With the clutch still energized, tighten the bolt to loosen the clutch from the shaft. Disconnect the clutch wire at the bullet connector.
3. Loosen the idler pulley or alterntor and remove the drive belt and the clutch and then remove the mounting bolts and the compressor.

Installation

Before installing the compressor, carefully remove any burrs or dirt that may be on the compressor shaft. The shaft must be dry and brightly polished.

1. Mount the clutch on the shaft and install the mounting screw and washer finger-tight. Place the compressor on the mounting bracket and install the four mounting bolts finger-tight.
2. Connect the clutch wire, energize the clutch and torque the clutch mounting bolt to specification. Tighten the compressor mounting bolts to specifications.
3. Install the belt and adjust and tighten the idler pulley.
4. Install the service valves on the compressor using new seals. **Be certain to remove the rubber shipping plugs first.** Tighten the service valve nuts to specification. Do not over tighten. The new ROTOLOK service valves can be rotated slightly on their seat without breaking the high pressure seal. This is not an indication of a loose valve. Leak test the compressor, then evacuate it and connect it back into the system.
5. Check the oil level in the compressor, and add or remove oil if necessary (Adjustments).

COMPRESSOR—ECONOLINE

Removal

1. Remove the engine cover and remove the air cleaner.
2. If the vehicle is equipped with an auxiliary heater, partially drain the cooling system.
3. Remove the oil filler tube.
4. Insulate the compressor (Adjustments), and disconnect the two service valves and hoses from the compressor. Cover the opening, to prevent dirt from entering the system. Energize the clutch and remove the clutch mounting bolt.
5. Install a 5/8-11 bolt in the clutch drive shaft hole. With the clutch still energized, tighten the bolt to loosen the clutch from the shaft. Remove the clutch pulley and bolt. Disconnect the clutch wire at the connector. Remove the brush holder from the shaft.
6. If the vehicle is equipped with an auxiliary heater, disconnect the heater hoses at the water valve and at the T connector in the line.
7. On V-8 models, remove the hose retaining bracket from the engine and position the hoses out of the way.
8. Remove the compressor-to-engine bracket bolts.
9. Remove the compressor mounting bolts. On V-8 models, the compressor has 6 mounting bolts. Two bolts are removed from the front of the vehicle and 4 bolts are

removed from under the vehicle. On 6-cylinder models, the compressor has 4 mounting bolts. The 2 rear mounting bolts are reached from under the vehicle. On 6-cylinder models, move the compressor outboard and remove the 3 front bracket mounting bolts.

10. Lift the compressor from the vehicle.

Installation

1. Install the clutch brush holder on the front of the compressor and connect the wire.
2. Position compressor to the mounting brackets. On V-8 models, install the 6 mounting bolts. On 6-cylinder models, install the front bracket mounting bolt, and then install the four mounting bolts.
3. Install the compressor-to-engine mounting brackets.
4. On V-8 models, position the hoses in the retaining bracket and install the bracket on the engine.
5. Install both heater hoses if they were disconnected.
6. Install the clutch assembly on the shaft. Then install the retaining bolt. Energize the clutch and torque the retaining bolt to specification.
7. Position the clutch pulley drive belt and adjust the belt tension.
8. Install the oil filler tube.
9. Install the service valves on the compressor using new gaskets. Tighten the service valve flared nuts to specification. **Do not overtighten the flared nuts. The service valves can be rotated slightly without breaking the high pressure seal. This is not an indication of a loose valve.**
10. Leak test the compressor, then evacuate it and connect it back into the system.
11. Operate the system on full air conditioning for 15 minutes. Then isolate the compressor and check the oil level in the compressor and add or remove oil as required.
12. Add coolant to the radiator as required.
13. Install the air cleaner.
14. Install the engine cover.

VALVE PLATE AND HEAD GASKET

The procedure for replacing a blown head gasket is identical to the procedure for replacing the valve plate except that the old valve plate is used. If a worn or damaged valve plate has caused the cylinder walls to become scored or has inbedded pieces of metal in the pistons, the compressor should be replaced.

Removal—All Compressors

1. Isolate the compressor (Adjustments in this part), and disconnect both service valves. Place a clean drip pan under the horizontally mounted compressor.
2. Remove the cylinder head bolts.
3. Remove the valve plate and cylinder head from the compressor by tapping upward with a fiber hammer on the overhanging edge of the valve plate.
4. Remove the valve plate from the cylinder head by holding the head and tapping against the valve plate.
5. Remove the drip pan from under the horizontally mounted compressor. Then, remove all particles of gasket, dirt and foreign material from the surface of the cylinder head and

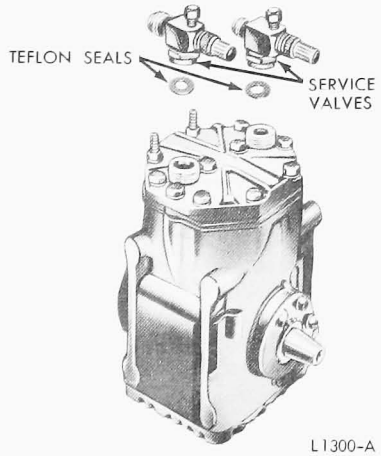

FIG. 14 Compressor Service Valves Removed

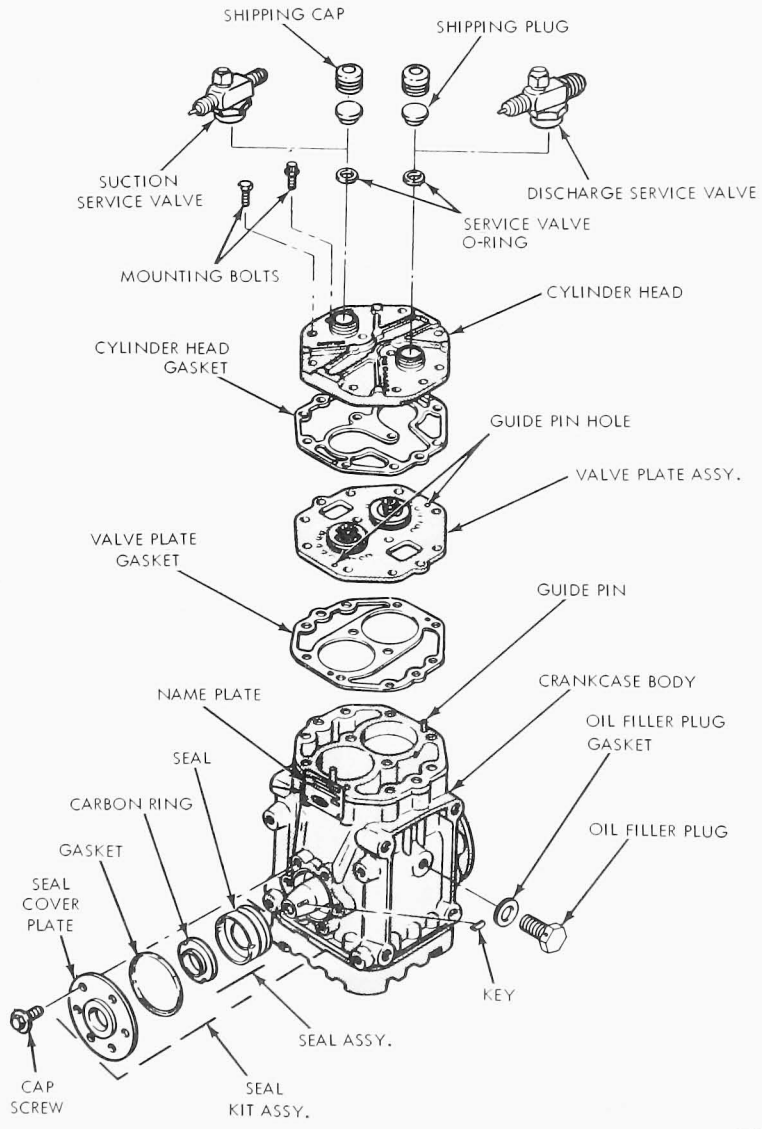

FIG. 15 York Compressor—Disassembled

cylinder face. **Be very careful not to scratch or nick the mating surfaces or any edges.**

Installation (York Compressor—Fig. 15)

1. Apply a thin film of clean refrigeration oil to each side of the valve plate gasket (Fig. 15).
2. Place the new valve plate gasket in position on the crankcase so that the crankcase dowel pins go through the dowel pin holes in the gasket (Fig. 15).
3. Place the valve plate in position on the cylinder so that the dowel pins go through the dowel pin holes (Fig. 15).
4. Apply a light film of clean refrigeration oil on each side of the cylinder head gasket. Then, place the gasket and cylinder head on the cylinder with the dowel pins inserted into the dowel pin holes in the gasket and head.
5. Insert the two longer cap screws in the two center holes of the cylinder head. Then, insert the remaining cap screws in the holes around the edge of the cylinder head. The four 12 point head screws should be inserted into the four holes closest to the service ports.
6. Tighten all head cap screws until they contact the head. Then, torque the two center screws to 15-23 ft-lbs.
7. Tighten the remaining cap screws in a pattern so that the cap screws diagonally opposite each other are evenly tightened to 15-23 ft-lbs. After the cylinder head has been installed 1/2 hour, retorque the head bolts to 15-23 ft-lbs.
8. Inspect the top of the cylinder head service valve ports to be sure that they are free of nicks and imperfections. Connect the service valves with new O-rings to the correct compressor ports and torque to specification. Then, check the compressor oil level and add or remove oil as required. (See Compressor Oil Level Check in Adjustments). Evacuate the compressor and connect it back into the system.

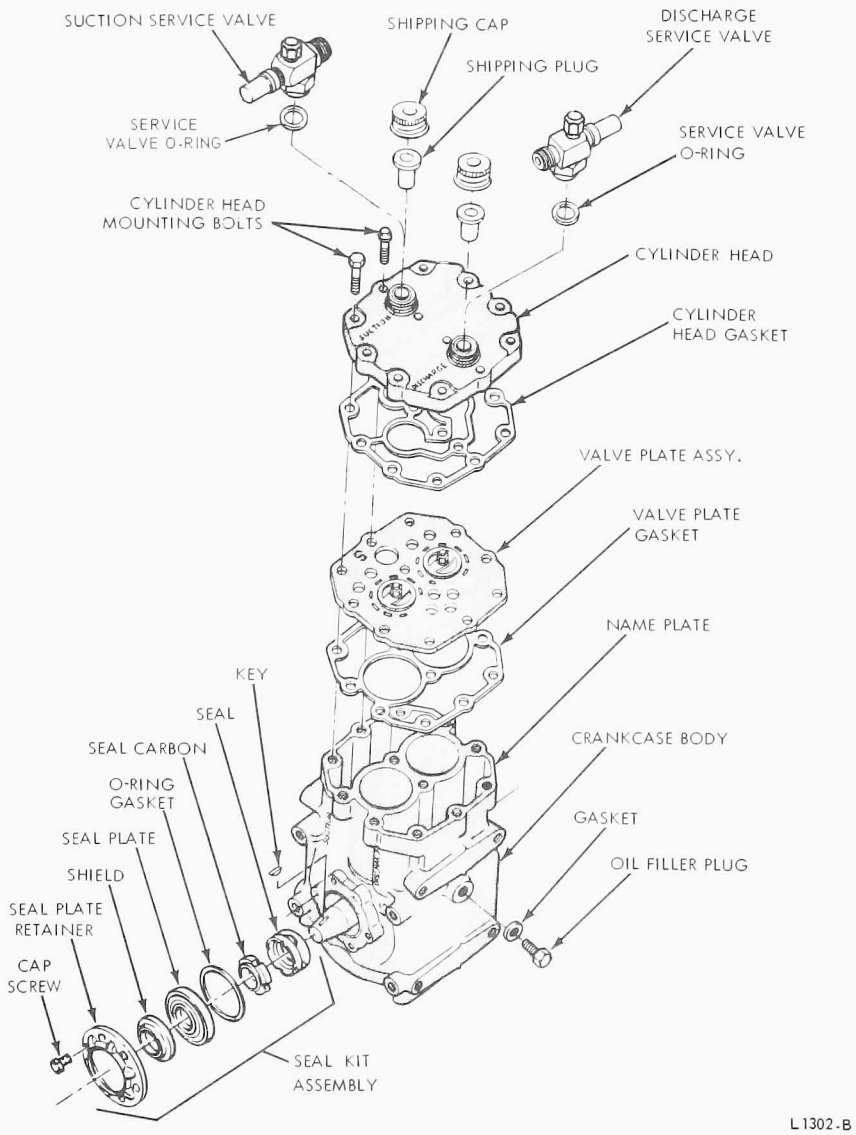

FIG. 16 Tecumseh Compressor—Disassembled

Installation (Tecumseh Compressor—Fig. 16)

1. Apply a thin film of clean refrigeration oil to each side of the valve plate gasket (Fig. 16).
2. Place the new valve plate gasket on the crankcase cylinder face and align the bolt holes.
3. Place the valve plate on the valve plate gasket so that the letter S (stamped on the valve plate) is on the same side of the crankcase as the word SUCTION. Align the bolt holes.
4. Apply a thin film of clean refrigeration oil on each side of the head gasket.
5. Place the head gasket on the valve plate with the largest hole of the gasket over the largest hole of the valve plate. Line up the holes of the gasket with those of the valve plate.
6. Position the cylinder head on the compressor. **The word SUCTION on the head must be up and on the same side as the word SUCTION on the compressor crankcase.**
7. Align the bolt holes of the cylinder head, gaskets and valve plate with the holes in the compressor crankcase.
8. Install the cylinder head attaching bolts in the bolt holes. The four 12 point head bolts must be inserted in the four holes nearest the head service ports.
9. Tighten the bolts until they contact the top surface of the cylinder head. Then, tighten the head bolts in a sequence so that the bolts diagonally opposite each other are evenly tightened to a torque of 20-24 ft-lbs.

   After the cylinder head has been installed 1/2 hour, retorque the head bolts to 20-24 ft-lbs.
10. Inspect the top of the cylinder head service valve ports to be sure that they are free of nicks and imperfections.

    Connect the service valves with new O-rings to the correct compressor ports and torque to specification.
11. Check the compressor oil level and add or remove oil as required. (See

Compressor Oil Level Check in Adjustments). Evacuate the compressor and connect it back into the system.

CRANKSHAFT SEAL

Removal—All Compressors

1. Isolate the compressor, loosen and remove the belt.
2. Remove the clutch and remove the Woodruff key. Carefully remove the secondary dust shield so as to avoid marring the shaft.
3. Carefully remove all accumulated dirt and foreign material from the seal plate and surrounding area of the compressor, and position a small drain pan beneath the seal plate.
4. Remove the seal plate cap screws, and gently remove the plate and gasket. Do not mar or scratch the sealing surfaces, or the polished shaft surface.
5. Remove the carbon seal ring and seal housing assembly from the crankshaft. A disassembled view of the crankshaft seal assembly is included in Figs. 15 and 16.
6. Clean all old gasket material from the seal plate and the compressor. Make certain that the shaft, the seal plate and the compressor gasket surfaces are completely clean.
7. Check the face of the crankshaft front bearing journal in the seal housing to make certain that there are no nicks or burrs. Check the crankshaft surface to be sure it is not damaged. Check all parts of the seal assembly to be sure that they are not damaged.
8. Inspect the compressor internal components for damage.

Installation—Tecumseh Compressor

1. Wash the new seal assembly components in clean refrigeration oil.
2. Coat the exposed surface of the crankshaft with clean refrigeration oil.
3. Place the seal (Fig. 16) over the compressor shaft with the end that fits the carbon ring facing out.
4. Position the carbon ring over the shaft and to the seal. The raised rim of the carbon ring must face outward.
5. Insert the O-ring in the crankcase mating surface for the seal plate.
6. Position the seal plate, shield and seal plate retainer to the compressor crankcase and align the cover attaching screw holes. Push the seal plate retainer against the mating surface of the crankcase and install the six attaching screws. Torque the screws in a circular sequence to 54-78 in-lb.
7. Rotate the shaft by hand 15 to 20 revolutions to seat the seal.
8. Make certain that there are no burrs or dirt on the compressor shaft. Install the key and magnetic clutch on the shaft.
9. Install the belt and adjust the tension to specifications.
10. Check the compressor oil level (Adjustments).

Installation—York Compressor

1. Wash the new seal assembly components in clean refrigeration oil.
2. Position the seal over the end of the shaft with the carbon ring retainer facing out. Move the seal in and out on the shaft a few times to insure a good seal between the seal and the shaft.
3. Push the seal all-the-way on the shaft. Be sure that the seal drive ring slots engage the drive pins on the shaft bearing journal face.
4. Place the carbon ring (Fig. 15) over the shaft and in the seal ring retainer. The polished surface of the carbon ring must face out and the lugs must engage the ring retainer and be fully seated.
5. Apply a light film of clean refrigeration oil on the matching faces of the crankcase and seal cover plate. Then, place the gasket in position on the crankcase face.
6. Place the seal cover plate in position (Fig. 15), with the polished side facing the carbon ring. Then, install the cap screws. Tighten the cap screws evenly while turning the crankshaft. Be sure that the clearance between the crankshaft and the hole in the seal cover plate is even all around the shaft. If the clearance is not equal all around the shaft, gently tap the seal face into position until the clearance is equal. Then, tighten diagonally opposite cover plate cap screws evenly to 7-13 ft-lb.
7. Make certain that there are no burrs or dirt on the compressor shaft. Install the key and magnetic clutch on the shaft.
8. Install the belt and adjust the tension to specification.
9. Check the compressor oil level (Adjustments).

CLUTCH

1. Loosen and remove the belt.
2. Energize the clutch and loosen and remove the clutch mounting bolt.
3. Install a 5/8-11 bolt in the clutch

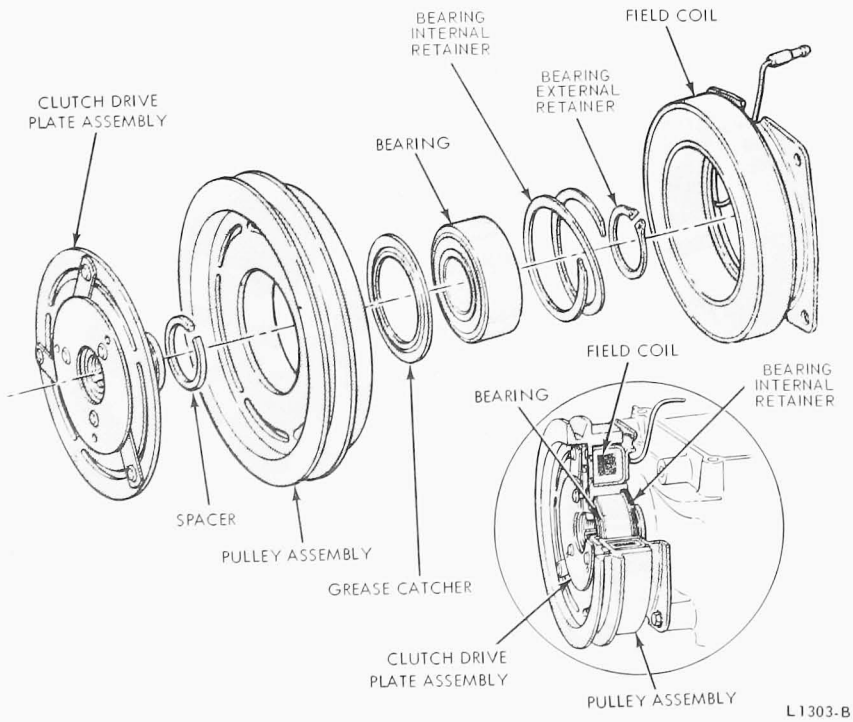

FIG. 17 A/C Clutch Assembly

drive shaft hole. With the clutch still energized, tighten the bolt to loosen the clutch from the shaft, then remove the magnetic clutch.
4. Carefully remove any burrs or dirt that may be on the compressor shaft. The shaft must be dry and brightly polished. Install the clutch, the clutch mounting bolt, and the washer.
5. Energize the clutch, and torque the bolt to specification.
6. Install and adjust the belt.

CLUTCH BEARING

When **installing** a new bearing, be very careful to support the bearing and the clutch assembly so as not to place any pressure on the balls of the bearing.

The following procedure should be rigidly adhered to during bearing replacement. Any exceptions due to clutch design are noted. Refer to Fig. 17.

Removal

1. Remove the clutch assembly from the compressor shaft as outlined in the foregoing procedure.
2. With the clutch assembly face down, remove the bearing external retainer from the drive plate shaft.
3. Support the clutch, face down, by the outer edge so as to clear the drive plate. Insert a 5/8-11 inch bolt through the drive plate shaft and hand tighten the bolt.
4. Smoothly apply enough pressure on the bolt to free the shaft from the bearing inner race and then remove the drive plate assembly. Before proceeding, check the drive face plate for any excessive warping or breakage. Replace the entire clutch assembly if any damage is evident.
5. Remove the bearing internal retainer from the pulley assembly. Support the pulley assembly, face up, by the bearing bore making certain that there is no interference when the bearing is pressed out. With a suitable plug, force the bearing out of the pulley assembly by the inner race. **The plug should clear the metal grease catcher, but do not remove the grease catcher from the pulley assembly.**

Installation

Before installing the bearing, be sure that all bearing contact surfaces are clean.

1. Support the pulley assembly face down, near the bearing bore; but do not support it by the sides of the pulley grooves as this may bend the pulley assembly.
2. Press a new bearing into the bearing bore by the outer race. **Do not press the bearing in by the inner race.** Pressure should be uniform and in line with the axis of the bearing bore. Replace the bearing internal retainer.
3. Support the pulley assembly, face up, by the bearing inner race. Insert a 5/8-11-inch bolt into the front of the drive face plate and carefully press the shaft into the bearing inner race, exerting pressure on the bolt. Be certain that the shaft is in line with the axis of the bearing bore.
4. Replace the bearing external retainer onto the drive plate shaft. Rotate the pulley relative to the drive plate to make certain that there is free rotation and that there is no looseness of the assembly before installing the clutch onto the compressor.
5. Install the clutch assembly on the compressor shaft.

DRIVE BELT

1. Loosen the idler pulley or compressor and remove the belt.
2. Place the new belt in position, and adjust the belt tension (Tool T63L-8620-A) to specification. Then, tighten the idler pulley or compressor.
3. Check the belt alignment, and adjust it if necessary.

SPECIFICATIONS

CURRENT DRAW LIMITS @ 12.8 VOLTS

Vehicle	A/C Blower Motor	Condenser Fan Motor	Compressor Clutch
Light Truck	180.0 Max. Amps.	–	3.75 Max. Amps.
L-Series	Std. 16.0 Max. Amps.	6.0 Max. Amps.	3.75 Max. Amps.
	High Performance 20.0 Max. Amps.		
C-Series	5 to 5 1/2 Amps.	6.0 Max. Amps.	3.75 Max. Amps.
W-Series	5 to 5 1/2 Amps.	6.0 Max. Amps.	3.75 Max. Amps.
Econoline	19.8 Max. Amps.	–	3.75 Max. Amps.

REFRIGERANT CAPACITIES (REFRIGERANT–12)

Vehicle	Capacity (Pounds)
Light Truck	2
L-Series	3 1/2
C-Series	2 1/2
W-Series	3 3/8
Econoline	2 1/4

AIR CONDITIONING COMPRESSOR

Torque Limits (Ft-Lbs)		
Description	Tecumseh	York
Cylinder Head	20-24	15-23
Front Seal Plate	54-78 In-Lb.	7-13
Service Valve (Tube-O)	20±10	20±10
Mounting Bolt	20-30	20-30
Oil Filler Plug	18-22	4-11
Clutch Mounting	20-30	20-30
Base Plate	–	14-22
Back Plate	–	9-17
Clutch Brush or Coil	6-12	6-12
Quick Disconnect	10-15	10-15

COMPRESSOR OIL CAPACITIES ①

Description		Vertical	Horizontal
Tecumseh ③		7/8 Inch Min.	7/8 Inch Min.
(11 Fluid Ounces)		1 3/8 Inch Min.	1 5/8 Inch Max.
York ③		7/8 Inch Min.	13/16 Inch Min.
(10 Fluid Ounces)		1 1/8 Inch Max.	1 3/16 Inch Max.
Driven Belt Tension (Between Fan Pulley and Air Conditioner Compressor)			
	New	140 lbs.	
	Used ②	110 lbs.	
	Minimum ②	90 lbs.	
Belt Tension Tool		T63L-8620-A	
Compressor Clutch Run-Out		1/32 Inch Maximum	

① Use Specification ESA-M2C31-A, Ford Part No. C9AZ-19577-A.

② Belt Operated for a Minimum of 10 Minutes is Considered a Used Belt.

③ Do not add oil if dip stick indicates proper level of oil between minimum and maximum. If dip stick is below minimum level, add oil up to minimum oil level only.

CL1365-C

PART 36-61 Light Truck Heater-Air Conditioning System

COMPONENT INDEX	Page	COMPONENT INDEX	Page
ADJUSTMENTS	61-06	REMOVAL AND INSTALLATION (Contd.)	
DESCRIPTION AND OPERATION	61-01	Evaporator Core	61-08
REMOVAL AND INSTALLATION		Expansion Valve	61-09
Blower Motor	61-06	Heater Core	61-06
Condenser and/or Receiver	61-10	Icing Switch	61-09
Control Assembly	61-09	Registers	61-10

DESCRIPTION AND OPERATION

DESCRIPTION

The heater-air conditioner is an integral unit with the evaporator housing mounted to the engine side of the dash panel. The plenum and air intake is mounted under the instrument panel. The condenser and 40 degree ambient switch are located ahead of the radiator.

The system can be operated with either fresh or recirculated air, depending on the positions of the control levers.

1. With mode (lower) lever on VENT—all air is fresh regardless of the TEMPERATURE lever position.
2. With mode (lower) lever in all other positions—system operates on recirculated air with TEMPERATURE lever on COOL to about 1-1/2 inches toward WARM. Fresh air is used from about 1-1/2 inches toward WARM to WARM position.

The controls are located in the upper center of the instrument panel. The controls consist of two horizontal sliding levers and a blower switch. The top sliding lever is the temperature lever which controls the air blend door, fresh air-recirc. door, and the water valve. The lower sliding (mode) lever controls air distribution to the desired outlets, the blower off switch, and the compressor switch. The blower switch is located to the left of the horizontal sliding levers. This switch controls the blower motor speed only, and will **not** shut the blower OFF.

OPERATION

Air is drawn into the system through the recirculating air door or the fresh air door, through the evaporator core into the evaporator housing. From that point, air is pulled around and/or through the heater core to the blower. The diversion of air through or around the heater core is dependent on the temperature lever setting. From the blower motor, air is forced into the plenum and distributed to the floor, defrosters or registers, depending on the setting of the mode (lower) control lever. Fig. 1 shows the air flow for the various mode lever settings. Fig. 2 shows the effect the temperature lever has on air flow and water valve.

CONTROL OPERATION

The eight-port vacuum selector (located in the control assembly) is operated by the mode (lower) control lever. The rubber diverter plate located in the selector directs vacuum or atmospheric pressures to the ports and thence to the vacuum motors as required by the system. The eight-port selector also comes equipped with the low speed blower switch that is activated when the lever is moved to the VENT position on the control panel. At this point the fresh air door is opened and a forced air ventilation system is in operation. The switch remains closed through the remainder of the lever travel. The second switch on the selector activates the compressor clutch in the PANEL and partial (DELTA) modes only.

In series with the clutch switch is the de-icer switch which senses the temperature of the evaporator core through a capillary tube inserted in the core fins. Should the temperature of the core fall below 28 degrees F, the clutch is deactivated and the core is protected from icing. The de-icer switch is again activated when the core temperature reaches 34 degrees F. The 40 degrees F ambient temperature switch (located on the radiator support) is also connected in series with the clutch circuit and deactivates the clutch when the ambient falls below 40 degrees F. This switch will not reactivate until the ambient temperature reaches 55 degrees F.

The three-port vacuum selector is also located on the control assembly and is operated by the temperature lever. The first 10 degrees of lever travel partially opens the water valve. The movement from 10 degrees to 20 degrees fully opens the water valve and the fresh air door.

The system temperature is further modulated by the movement of the air blend door which controls the amount of cooled air that passes through or by-passes the heater core. The blend door is connected to the temperature lever by a Bowden cable.

The low blower switch, as mentioned above, is located on the eight port selector. If higher blower speeds are desired, they can be obtained by activating the blower switch. This switch has four speeds, Low, two intermediate and High. The blower can only be shut-off by moving the mode (lower) lever to OFF.

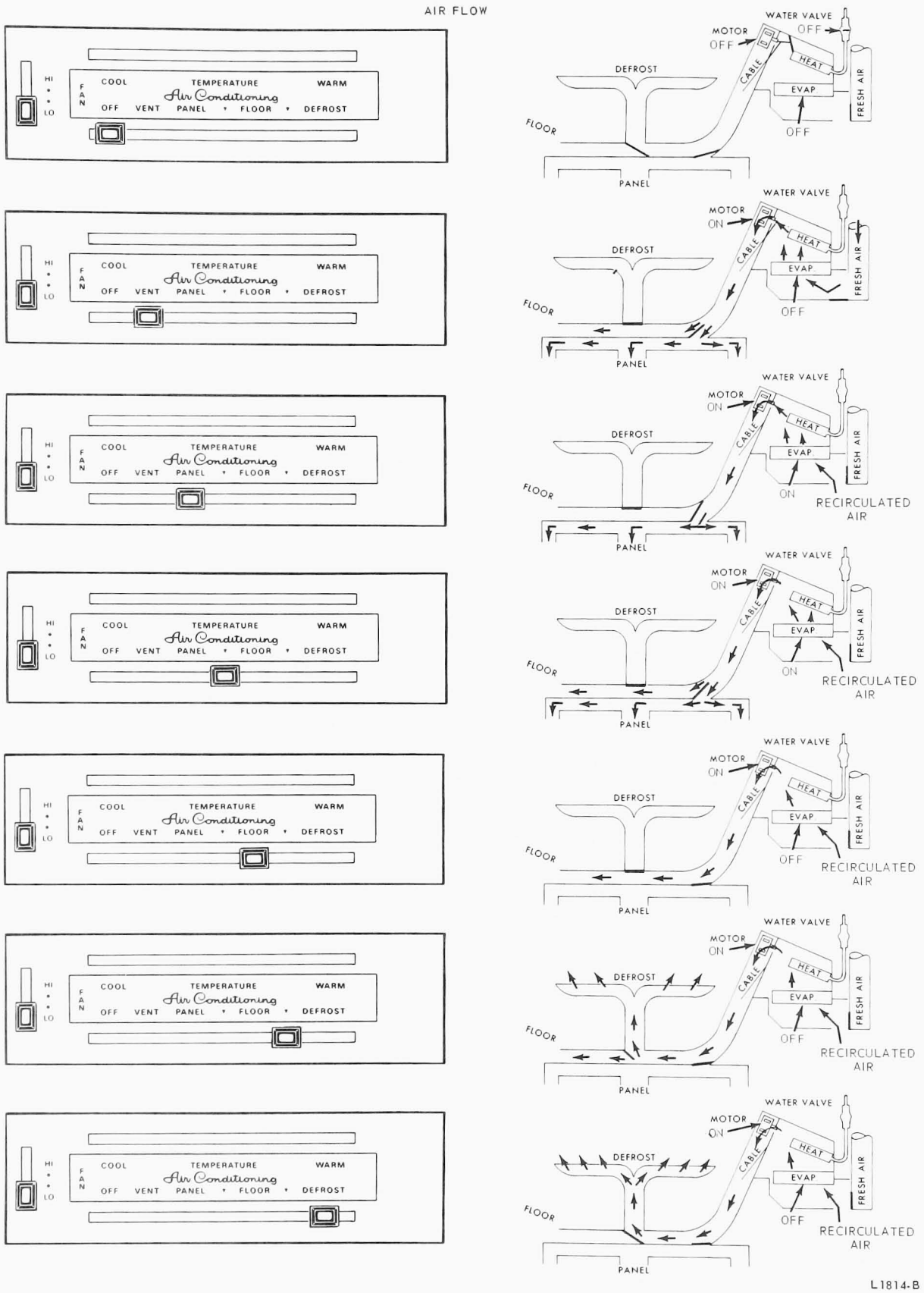

FIG. 1 Heater-A/C Air Flow Chart—Mode Lever Position

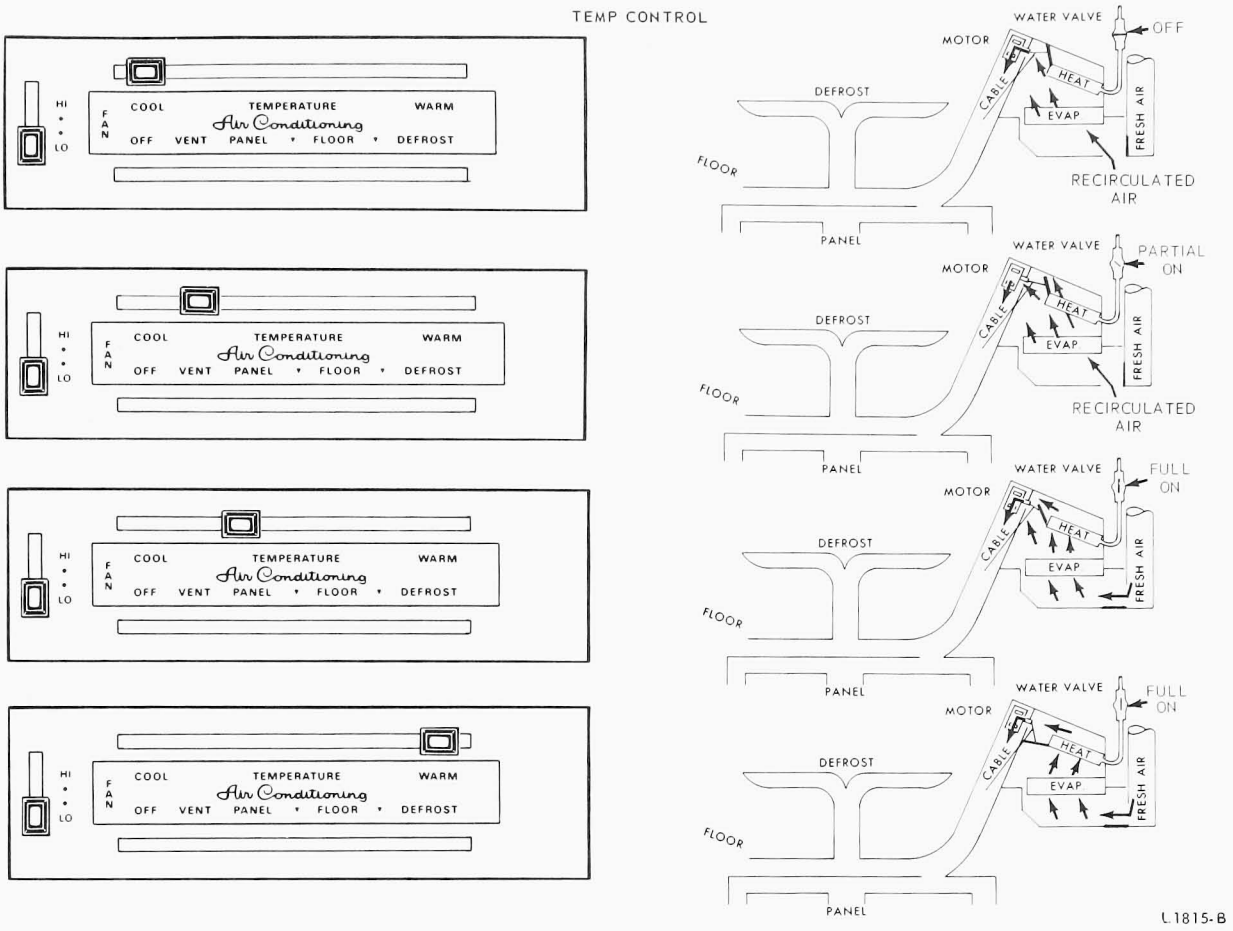

FIG. 2 Heater-A/C Air Flow Chart—Temperature Lever Position

Figs. 3 and 4 show the vacuum schematic for the system and the vacuum applications for the various mode lever positions.

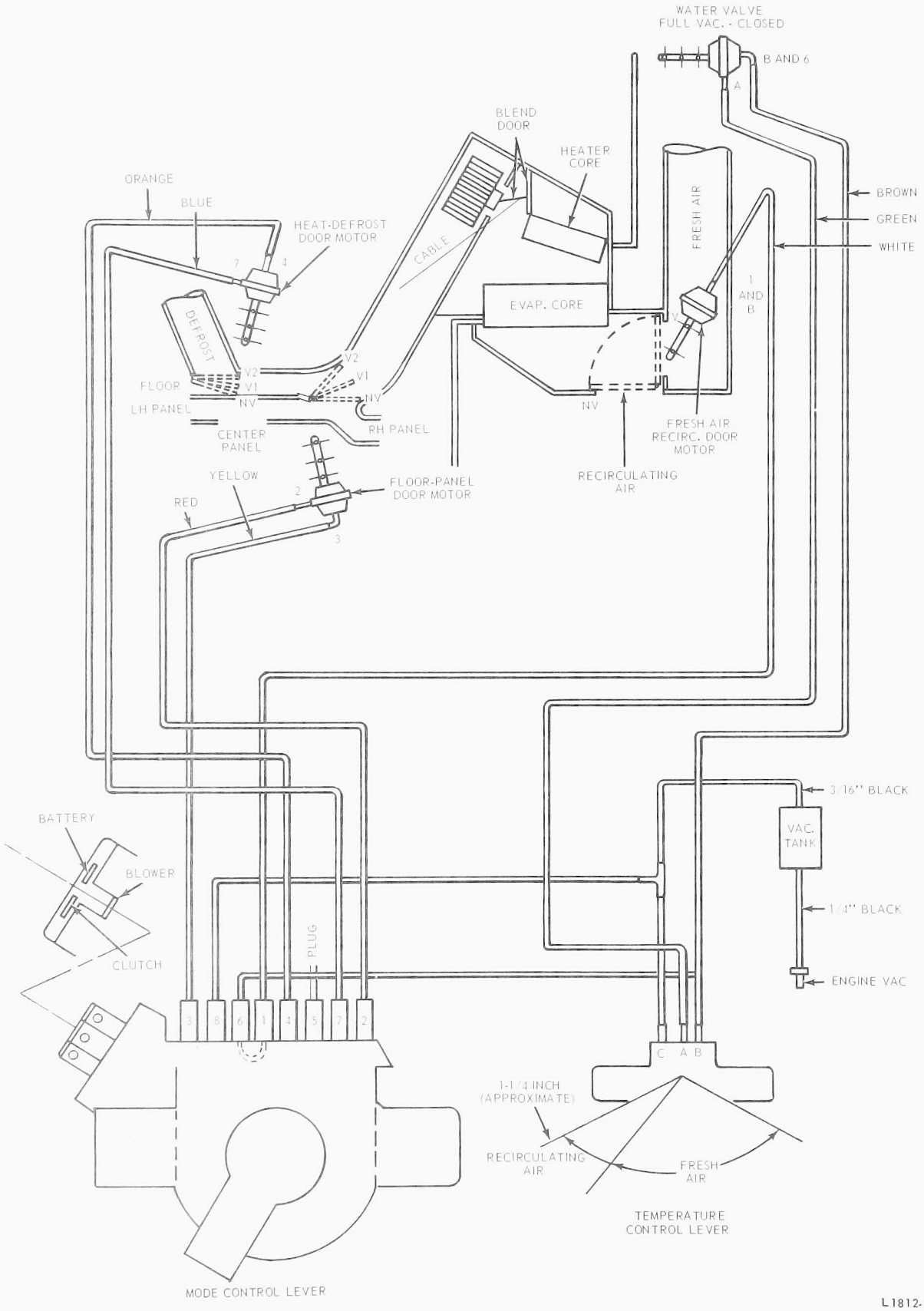

FIG. 3 Heater-A/C System Vacuum Schematic

HEATER-AIR CONDITIONER VACUUM CONTROL CHART

LOWER CONTROL LEVER POSITION

COMPONENT		HOSE COLOR	OFF	VENT	PANEL	▼	FLOOR	▼	DEFROST
FRESH AIR-RECIRC. DOOR		White	V ①	NV ①	FRESH OR RECIRCULATED AIR DEPENDING ON POSITION OF TEMP. LEVER – SEE UPPER CONTROL LEVER POSITION BELOW				
	OPEN TO		RECIRC.	FRESH					
HEAT-DEFROST DOOR	PARTIAL (END)	Orange	NV	V	V	V	V	V	NV
	OPEN TO		DEFROST	FLOOR	FLOOR	FLOOR	FLOOR	MID-POSITION	DEFROST
	FULL (SIDE)	Blue	V	V	V	V	V	NV	NV
FLOOR-PANEL DOOR	PARTIAL (END)	Yellow	NV	V	V	V	NV	NV	NV
	OPEN TO		FLOOR	MID-POSITION	PANEL	MID-POSITION	FLOOR	FLOOR	FLOOR
	FULL (SIDE)	Red	NV	NV	V	NV	NV	NV	NV
WATER VALVE	PARTIAL (END)	Brown	V OFF	SEE UPPER CONTROL LEVER POSITION BELOW					
BLOWER MOTOR			OFF	ON LO – M_1 – M_2 – HI					
COMPRESSOR CLUTCH ②			OFF		ON		OFF		

UPPER CONTROL LEVER POSITION

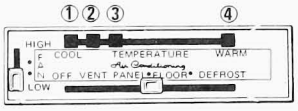

COMPONENT		HOSE COLOR	LEVER POSITION ①	②	③	④
WATER VALVE	PARTIAL (END)	Brown	V	V	NV	NV
	VALVE POSITION		OFF	PARTIAL ON	ON	ON
	FULL (SIDE)	Green	V	NV	NV	NV
FRESH AIR DOOR			V – CLOSED		NV – OPEN	
RECIRC. DOOR			V – OPEN		NV – CLOSED	

① Not affected by position of temperature lever when lower lever is in vent or off.
② Above 40° F. ambient temperature and evaporator core temperature above 34° F.

V – Vacuum; NV – No Vacuum.

L1813-A

FIG. 4 Heater-A/C Vacuum Control Chart

ADJUSTMENTS

AIR BLEND DOOR

The only adjustment necessary is the air blend door. This door is connected to the temperature (upper) control lever by a Bowden cable. To adjust, loosen the cable clamp screw (Fig. 5). Move the temperature control lever to the extreme right and hold in that position. Then, rotate the air blend door crank to the extreme rearward position (Fig. 5), and tighten the cable clamp screw.

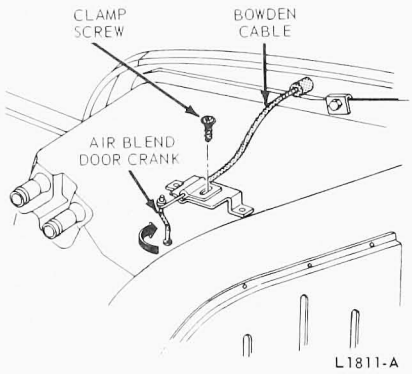

FIG. 5 Air Blend Door Cable Adjustment

REMOVAL AND INSTALLATION

HEATER CORE AND/OR BLOWER MOTOR

Removal

1. Disconnect the battery cable, remove the carburetor air cleaner and drain the coolant from the engine.
2. Remove the heater hoses from the heater core.
3. Remove the A/C hose support from the cowl (Fig. 6).
4. Remove the insulation tape from the expansion valve. Then, remove the cover plate and seal from the evaporator housing at the expansion valve.
5. Remove the glove box liner and the right A/C duct. Pull the duct from the register and release the clip at the plenum for duct removal.
6. Disconnect the vacuum hose from the fresh air door vacuum motor (Fig. 7).
7. Remove evaporator rear housing from dash panel and fresh air inlet boot (Fig. 8). Install one upper nut to retain evaporator front housing to dash after rear housing is removed.
8. Rmove the icing switch and icing switch mounting plate (Fig. 8). Push wire grommet out of the mounting plate.
9. Remove plenum from evaporator front housing and lower plenum down (Fig. 9).
10. Remove 4 screws attaching evaporator core to housing. Pull core away from housing and position up and rearward from housing. This can be done by tying twine to one of the core end tubes, routing the twine through the glove box opening and connecting it to the steering wheel.
11. Remove heater core from evaporator housing (3 screws and 2 plates).
12. To remove the blower, unsnap temperature door from arm, and remove the arm support (2 screws).
13. Remove temperature door arm pivot retainer (1 screw).
14. Remove blower and motor from housing.

Installation

1. Install the blower in the housing.
2. Install the temperature door pivot retainer, support and door in the housing.
3. Install the heater and evaporator cores in the housing.
4. Install the plenum and icing switch. Connect the blower and icing switch wires.
5. Install the evaporator rear housing and connect the fresh air inlet boot to the housing.
6. Connect vacuum hose to the fresh air door vacuum motor.
7. Install the right A/C duct and glove box liner.
8. Install the seal and cover plate on the evaporator housing at the expansion valve.
9. Install the insulation tape on the expansion valve.
10. Install the A/C hose support on the cowl.
11. Connect the vacuum hoses to the intake manifold and the heater hoses to the heater core.
12. Fill the cooling system and install the carburetor air cleaner.
13. Connect the battery ground cable.

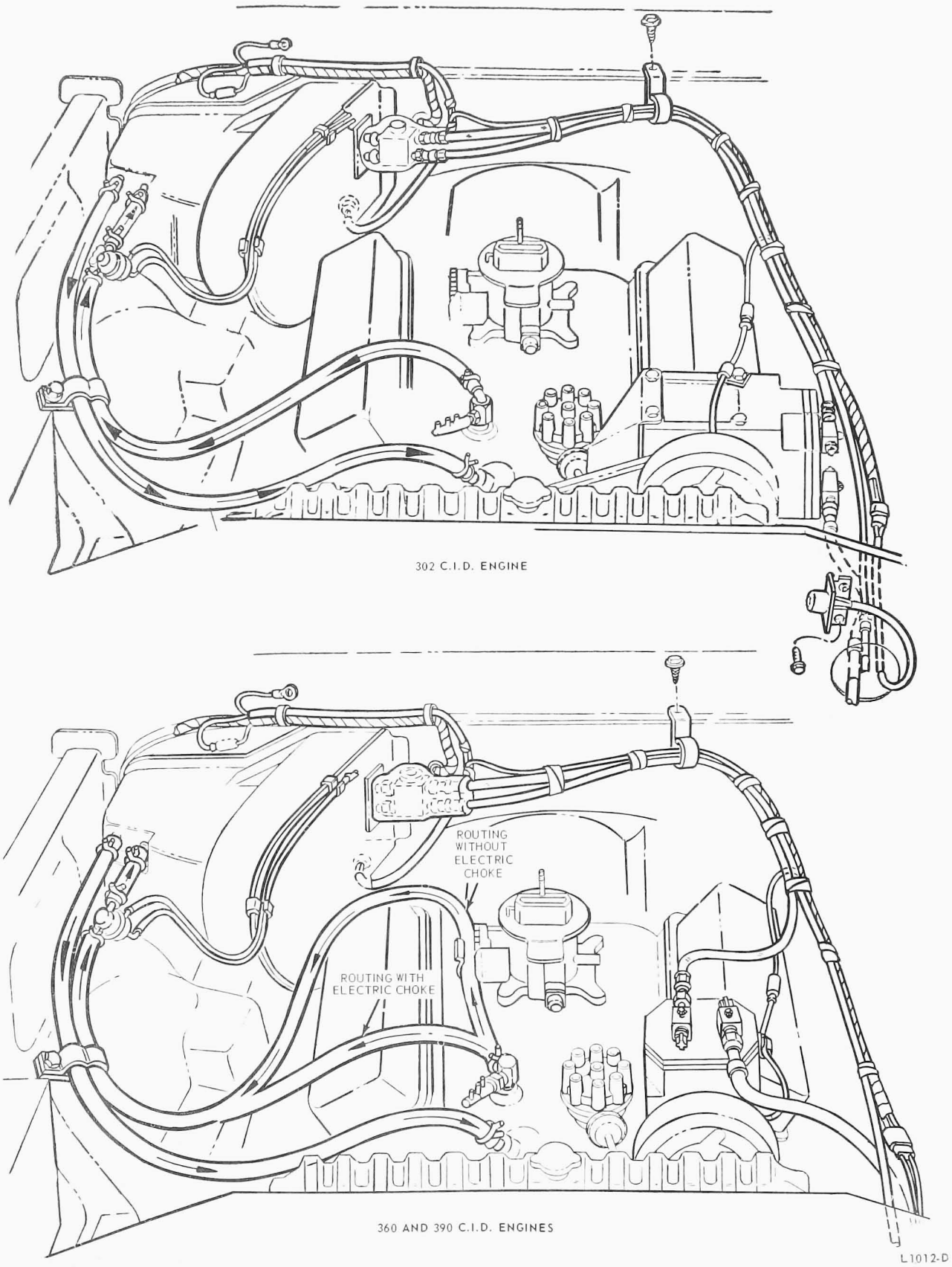

FIG. 6 Heater and A/C Hose Routings

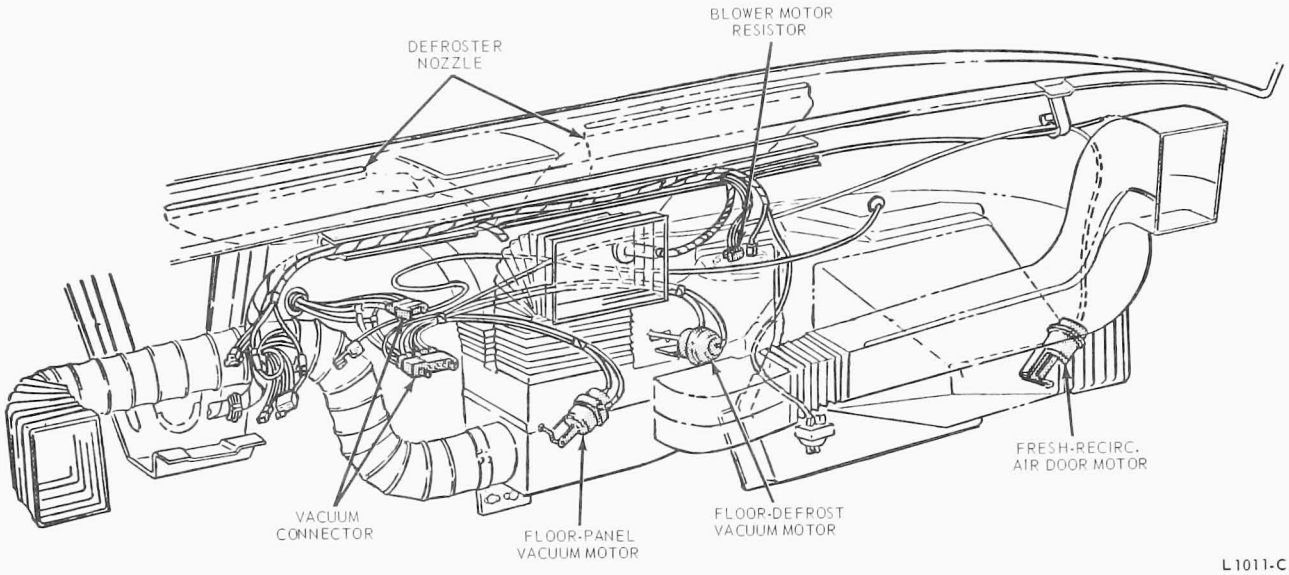

FIG. 7 Heater-Air Conditioner Installation

EVAPORATOR CORE

Removal

1. Disconnect the battery cable and remove the carburetor air cleaner.
2. Discharge the refrigerant from the A/C system. Refer to Part 36-30.
3. Remove the A/C hose support from the cowl (Fig. 6).
4. Remove the insulation tape from the expansion valve. Then, remove the cover plate and seal from the evaporator housing at the expansion valve.
5. Remove the glove box liner and the right A/C duct. Pull the duct from the register and release the clip at the plenum for duct removal.
6. Disconnect the vacuum hose from the fresh air-recirc. door vacuum motor (Fig. 7).
7. Remove evaporator rear housing from dash panel and fresh air inlet boot (Fig. 8). Install one upper nut to retain evaporator front housing to dash after rear housing is removed.
8. Remove the icing switch and icing switch mounting plate (Fig. 8). Push wire grommet out of mounting plate.
9. Remove plenum from evaporator front housing and lower plenum down (Fig. 9).
10. Remove the expansion valve from the evaporator core (Fig. 6).
11. Remove 4 screws attaching evaporator core to housing and remove core.

Installation

1. Position core to evaporator housing and install attaching screws.

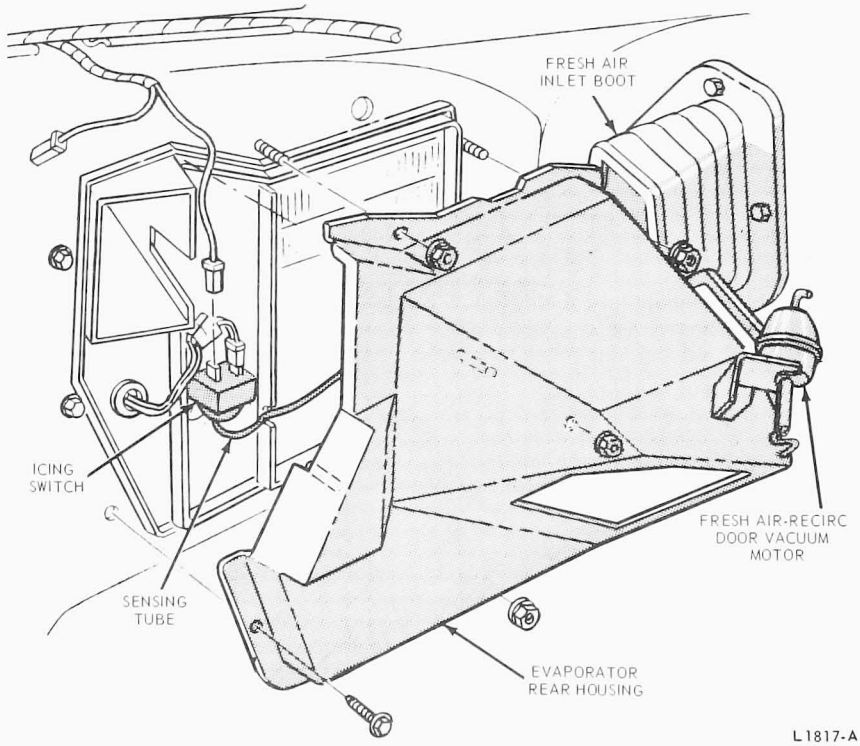

FIG. 8 Evaporator Rear Housing Removal

2. Connect the expansion valve to the evaporator core.
3. Install the plenum and icing switch. Connect the blower and icing switch wires.
4. Install the evaporator rear housing and connect the fresh air inlet boot to the housing.
5. Connect vacuum hose to the fresh air door vacuum motor.
6. Install the right A/C duct and glove box liner.
7. Install the seal and cover plate on the evaporator housing at the expansion valve.
8. Install the A/C hose support on the cowl.
9. Leak test, evacuate, and charge the air conditioning system as outlined in Part 36-30.

10. Install the insulation tape on the expansion valve.
11. Install the carburetor air cleaner.
12. Connect the battery ground cable, and check the system operation.

EXPANSION VALVE

Removal

1. Remove the carburetor air cleaner.
2. Discharge the refrigerant from the A/C system. Refer to Part 36-30.
3. Remove the A/C hose support from the cowl (Fig. 6).
4. Remove the insulation tape from the expansion valve, and remove the expansion valve from the evaporator core tubes and refrigerant lines.

Installation

1. Connect the expansion valve to the evaporator core tubes and the refrigerant lines.
2. Leak test, evacuate, and charge the A/C system as outlined in Part 36-30.
3. Install the insulation tape on the expansion valve.
4. Install the carburetor air cleaner, and check the operation of the A/C system.

ICING SWITCH

Removal

1. Disconnect the battery ground cable.
2. Remove the glove box liner and the right A/C duct. Pull the duct from the register and release the clip at the plenum for duct removal.
3. Disconnect the vacuum hose from the fresh air door vacuum motor (Fig. 6).
4. Remove the evaporator rear housing from the dash panel and the fresh air inlet boot (Fig. 8). Install one upper nut to retain evaporator front housing to dash after rear housing is removed.
5. Disconnect icing switch wires, pull sensing tube from evaporator core, and remove 2 switch attaching screws.

Installation

1. Installing icing switch screws connect wires, and insert sensing tube 4 inches into evaporator core. Be sure sensing tube is placed in notch of housing as shown in Fig. 8.
2. Install the evaporator rear housing and connect the fresh air inlet boot to the housing.
3. Connect the vacuum hose to the fresh air door vacuum motor.
4. Install the glove box liner and the right A/C duct.
5. Connect the ground cable to battery and check operation of A/C system.

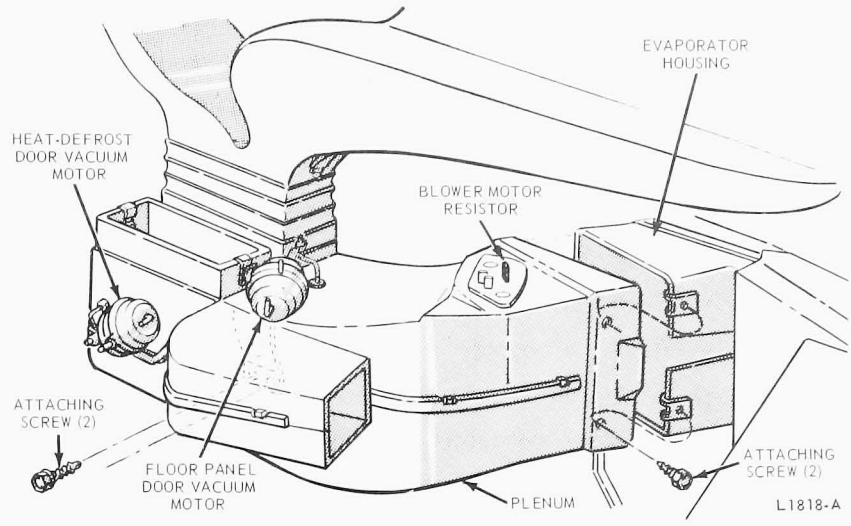

FIG. 9 Heater-A/C Plenum Installation

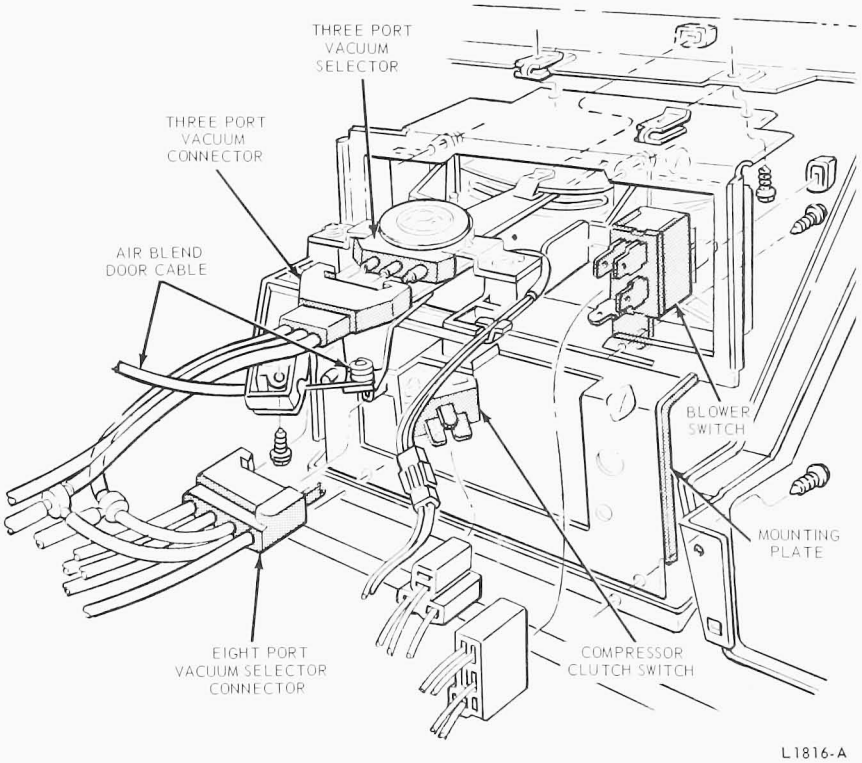

FIG. 10 Heater-Air Conditioner Control Connections

CONTROL ASSEMBLY

1. Remove the instrument cluster as outlined in Group 33 of this manual.
2. Remove 4 screws attaching the control to the mounting plate.
3. Disconnect the wire connectors, vacuum connectors, and Bowden cable from the control (Fig. 10). Then, remove the control assembly.
4. To install, position the control assembly and connect the wire connectors, vacuum connectors, and Bowden cable to the control. The pigtail of the Bowden cable must be up as shown in Fig. 10, and the cable must be routed over the vacuum hoses.
5. Install 4 screws attaching control to mounting plate.

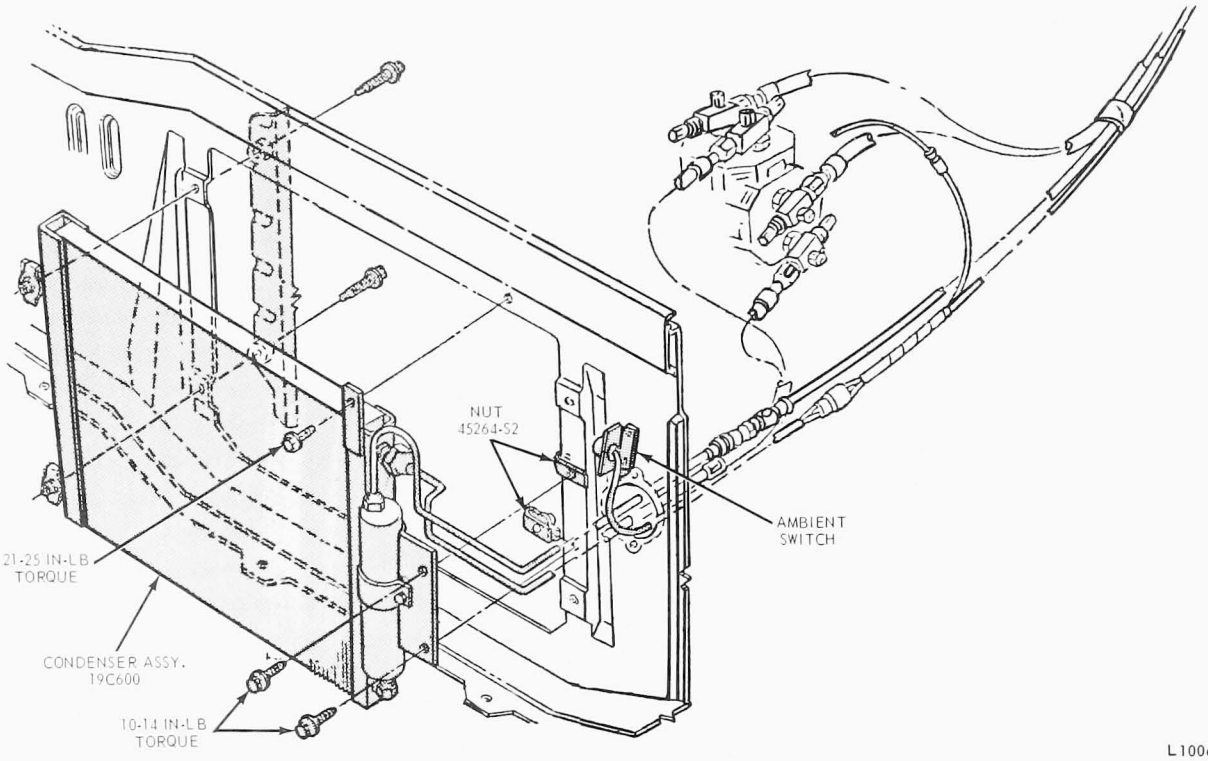

FIG. 11 Condenser and Receiver Tank Installation

6. Install the instrument cluster as outlined in Group 33, and check operation of heater-A/C system.

CONDENSER AND/OR RECEIVER

Removal

1. Discharge the refrigerant from the A/C system. Refer to Part 36-30.
2. Remove the hood latch support (5 screws).
3. Disconnect the refrigerant lines at the receiver tank and condenser (Fig. 11).
4. Remove the condenser and receiver attaching bolts (Fig. 11), and remove the condenser and receiver tank.
5. Separate the receiver tank from the condenser for replacement, if necessary.

Installation

1. Assemble the condenser and receiver.
2. Install the condenser on the radiator support and connect the refrigerant lines.
3. Install the hood latch support.
4. Leak test, evacuate, and charge the air conditioning system as outlined in Part 36-30. Then, check the system operation.

REGISTERS

1. Insert a thin blade or ice-pick through the louvers and carefully pry the tabs (upper and lower) away from the housing to allow the pivots to clear housing. Then, pull louver assembly out of register housing (Fig. 12). Remove both louvers from center register assembly.
2. To remove register housing, pry four lock tabs (2 on each side) inward and pull register housing from instrument panel. The duct must be disengaged from the register housing for removal of the housing.

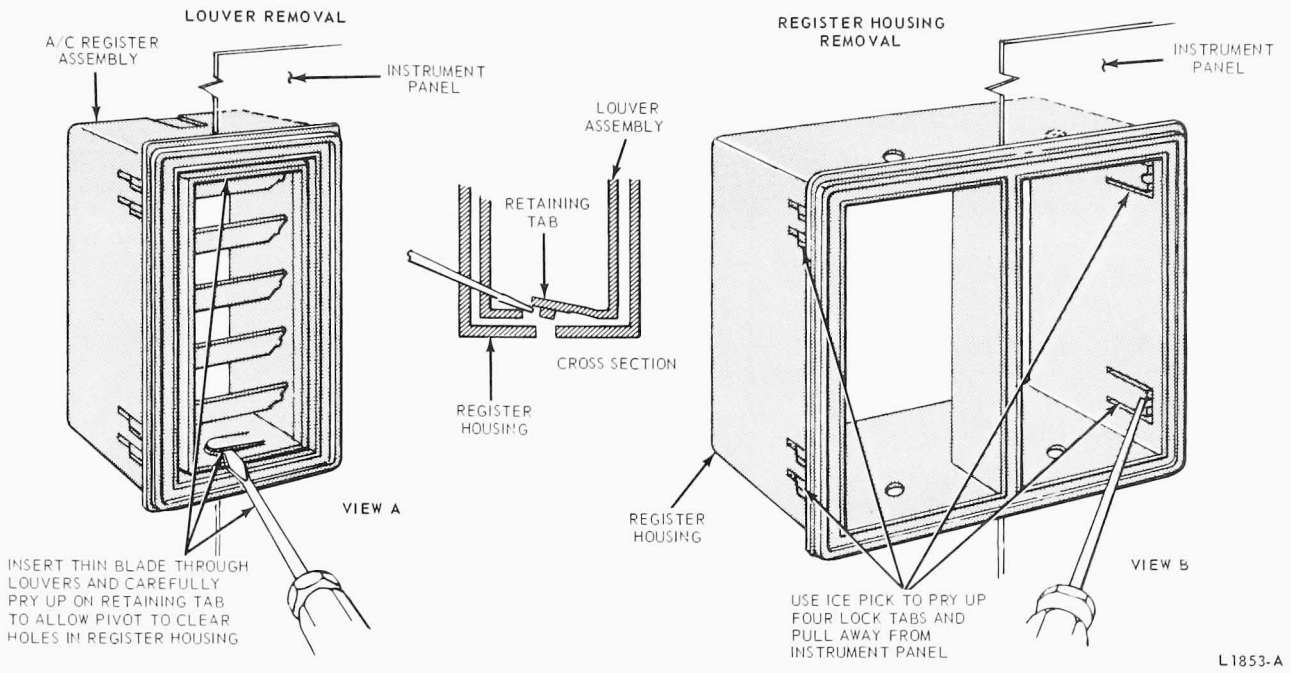

FIG. 12 Instrument Panel Register Removal

PART 36-62 L-Series Truck Heater—Air Conditioning System

Applies To L-Series Trucks

COMPONENT INDEX	Page	COMPONENT INDEX	Page
ADJUSTMENTS		REMOVAL AND INSTALLATION - Cont.	
A/C – Heat Door Cable	62-03	Condenser	62-07
Heat – Defrost Door Cable	62-03	Condenser Fan	62-07
Heater Water Valve Cable	62-03	Condenser Fan Switch	62-07
Thermostatic Switch Cable	62-03	Evaporator Core	62-05
DESCRIPTION AND OPERATION	62-01	Expansion Valve	62-06
REMOVAL AND INSTALLATION		Heater – Air Conditioner Assembly	62-05
Blower Motor	62-06	Heater Core	62-06
Blower Motor Switch	62-06	Receiver Tank	62-07
		Thermostatic Switch	62-06

This part deals with the controls and components that are peculiar to the L-Series truck heater-air conditioning system. Part 36-30 gives the information and procedures required for servicing the refrigeration system which is common to all truck lines. Reference to both parts is necessary for complete servicing of the L-Series system.

DESCRIPTION AND OPERATION

The heater-air conditioner (Figs. 1 or 2) is an integral system with the evaporator housing attached to the lower right side of the dash panel. The evaporator core is located inside the evaporator housing. The condenser is located on the truck cab roof (Fig. 5). The roof mounted condenser lines are routed along the cab right pillar post and are covered by two inspection covers.

Fresh air is used for heater operation and the heated air is directed at the floor area and/or the windshield. Recirculated air is used for air conditioner operation. The cooled air is discharged through the instrument panel registers.

The controls for the unit are located on the right side of the instrument cluster. The controls consist of two vertical sliding levers and a blower switch. The right sliding lever is the temperature lever. The left sliding lever is the heat, defrost and A/C selector lever. The blower switch is located below the sliding levers. **The blower switch must be ON for air conditioner operation.**

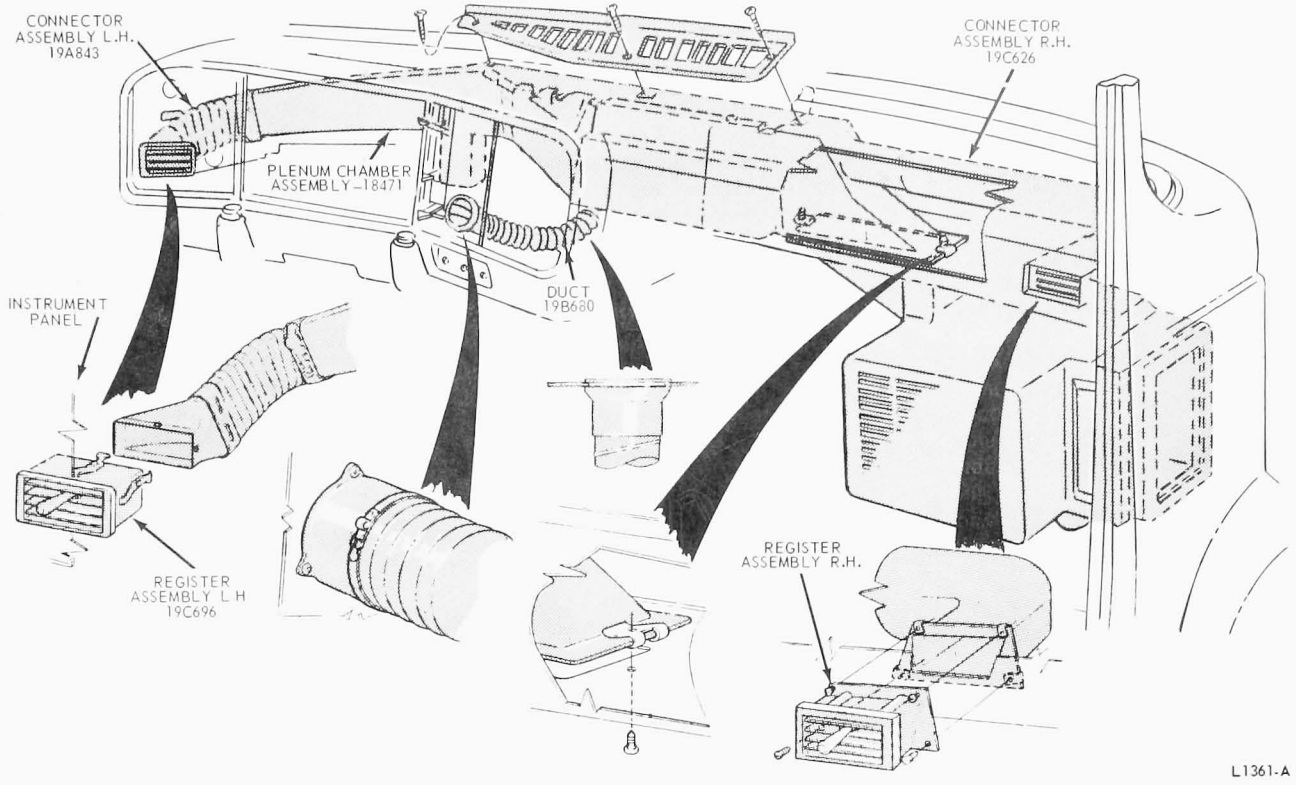

FIG. 1 L-Series Heater-Air Conditioner (Line Haul)

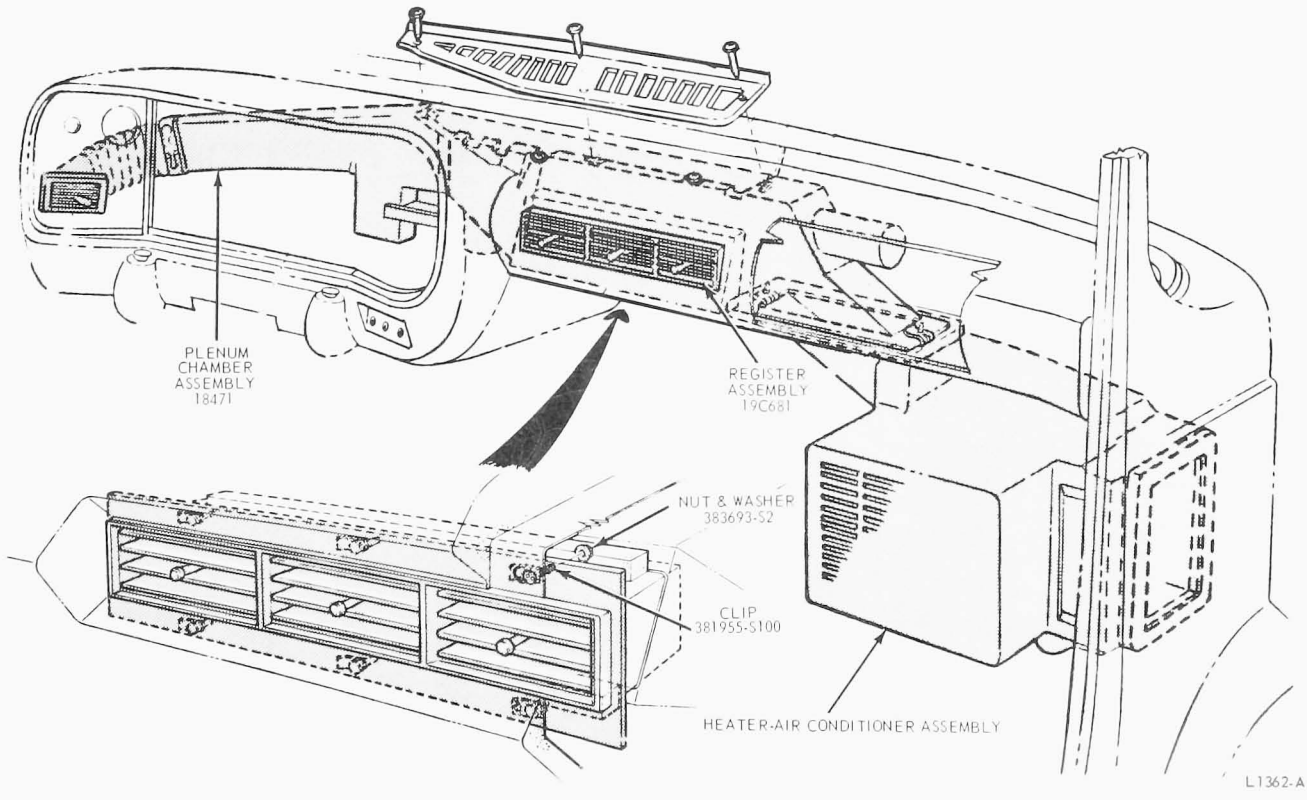

FIG. 2 L-Series Heater-Air Conditioner (City Delivery)

ADJUSTMENTS

A/C-HEAT DOOR CABLE

1. Loosen the cable clamp at the crank arm on the heater-A/C housing (View F, Fig. 3).
2. Move the left control lever to the mid-position of the control head slot. **The control lever must be in the mid-position to obtain proper adjustment.**
3. Move the A/C-heat door crank arm to the full forward position and tighten the cable retaining clamp.

HEAT-DEFROST DOOR CABLE

1. Loosen the cable clamp at the heat-defrost door (View C, Fig. 3).
2. Move the left control lever to the mid-position of the control head slot. **The control lever must be in the mid-position to obtain proper adjustment.**
3. Pull the heat-defrost door crank arm to the full rearward position, and tighten the cable retaining clamp.

THERMOSTATIC SWITCH CABLE

1. Loosen the cable clamp at the thermostatic switch (View G, Fig. 3).
2. Move the right control lever to the mid-position of the control head slot. **The control lever must be in the mid-position to obtain proper adjustment.**
3. Move the thermostatic switch lever all-the-way to the right until it stops. Then, tighten the cable retaining clamp.

HEATER WATER VALVE CABLE

1. Loosen the cable clamp at the water valve (View D, Fig. 3).
2. Move the right control lever to the mid-position of the control head slot. **The control lever must be in the mid-position to obtain proper adjustment.**
3. Push the water valve lever to the full forward position, and tighten the cable retaining clamp.

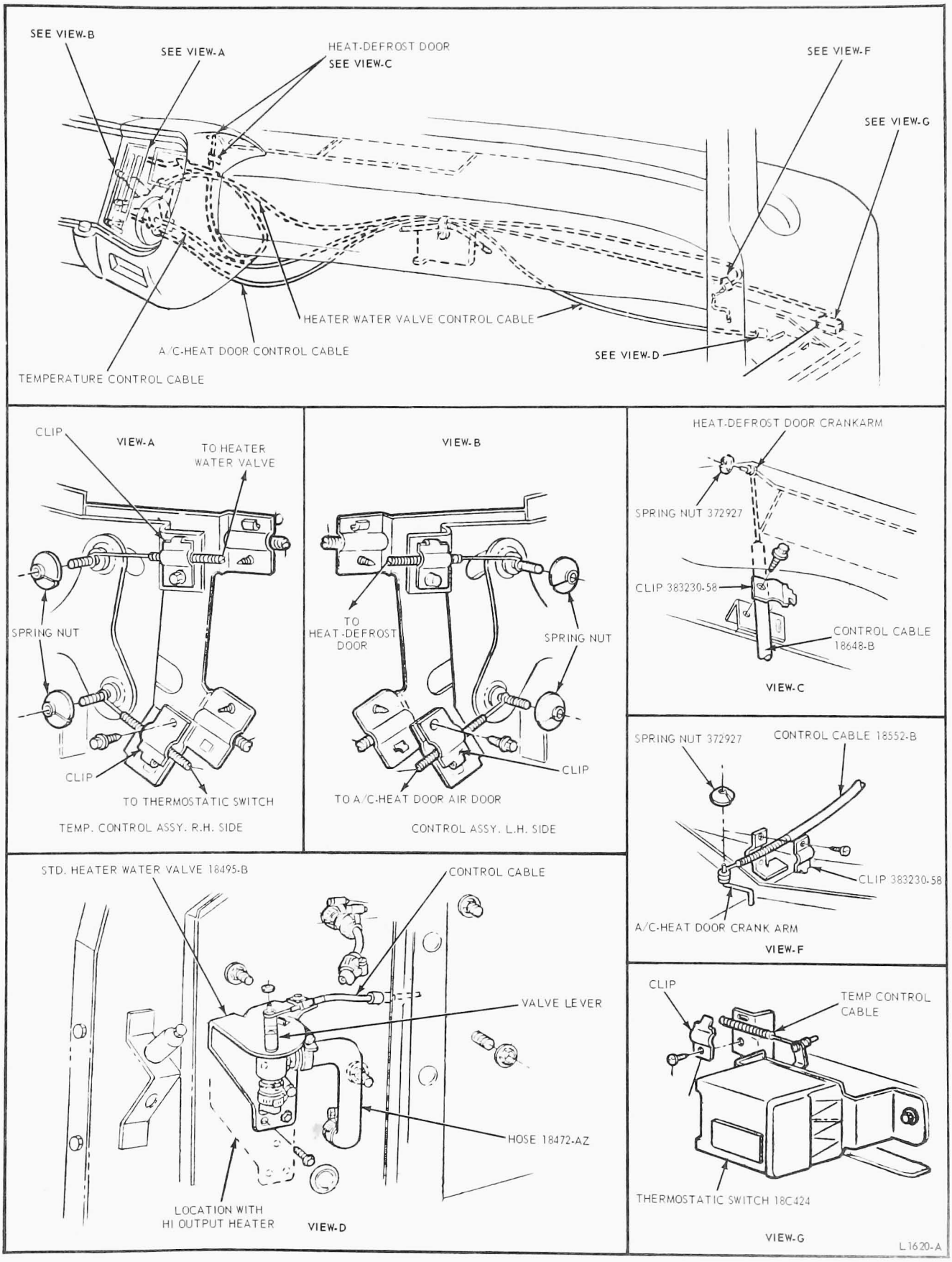

FIG. 3 Heater-A/C Control System—L-Series

REMOVAL AND INSTALLATION

HEATER-AIR CONDITIONER ASSEMBLY

Removal

1. Drain the engine cooling system.
2. Discharge the air conditioning system as outlined in Part 36-30, Adjustments.
3. Disconnect the battery ground cable.
4. Disconnect the refrigerant low pressure hose at the dash panel (Fig. 4).
5. Remove the refrigerant low pressure hose fitting retaining nut and lockwasher.
6. Remove the bolts attaching the heater-air conditioner to the dash panel.
7. Disconnect the drain tube at the bottom of the assembly housing.
8. Disconnect the heater hoses at the bottom of the assembly housing.
9. Disconnect the refrigerant high pressure hose at the side of the assembly housing.
10. Lower the assembly to the vehicle floor and disconnect the Bowden cables from the heater-air conditioner.
11. Disconnect the wires from the blower switch.
12. Disconnect the ground wire.
13. Remove the heater-air conditioner from the vehicle and place on a work bench.

Installation

1. Position the heat-air conditioner assembly in the vehicle (Fig. 4), and connect the refrigerant low pressure hose fitting to the dash panel.
2. Connect the Bowden cables to the heater-air conditioner assembly and adjust as outlined in Adjustments in this part.
3. Connect the wires to the blower switch and connect the ground wire.
4. Position the heater-air conditioner assembly to the dash panel and install the retaining nuts.
5. Connect the refrigerant low pressure hose to the dash panel fitting.
6. Install the heater hoses at the bottom of the assembly.
7. Attach the drain hose to the assembly.
8. Connect the refrigerant high pressure hose on the side of the assembly.
9. Connect the battery ground (-) cable.
10. Fill the cooling system.
11. Leak test, evacuate and charge the air conditioning system (Part 36-30, Adjustments). Then, check the system operation.

EVAPORATOR CORE

Removal

1. Discharge the air conditioning system (Part 36-30, Adjustments).
2. Remove the heater air conditioner assembly from the vehicle.
3. Remove the wire harness from the assembly.
4. Remove the blower resistor from the air conditioner housing.
5. Remove the screws retaining the evaporator core air deflector to the air inlet end of the housing.
6. Remove the housing cover retaining screws and remove the cover from the housing.
7. Remove the evaporator core retaining screws and remove the evaporator core and hoses.
8. Remove the expansion valve and hoses from the evaporator core.

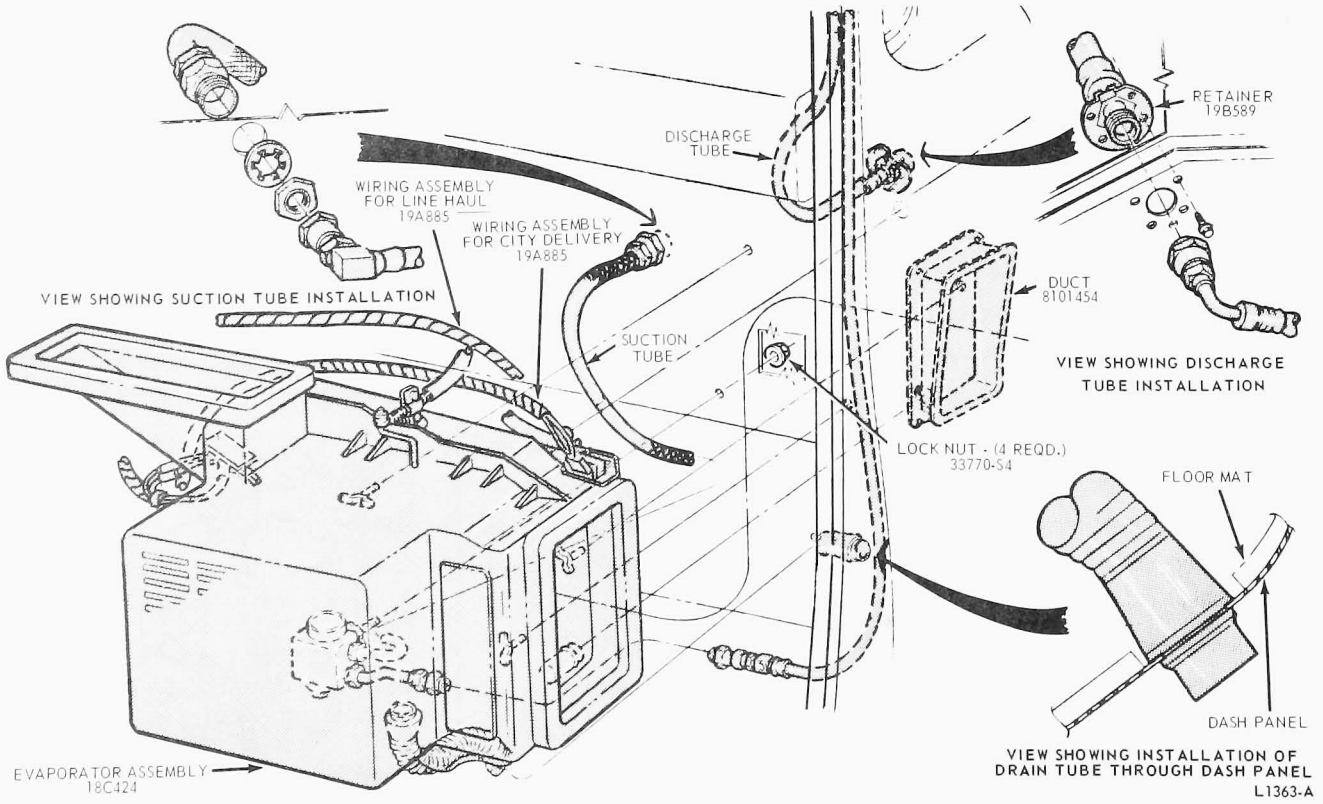

FIG. 4 Heater-Air Conditioner Installation—L-Series Truck

Installation

1. Connect the expansion valve and hoses to the evaporator core. Install the insulation on the expansion valve.
2. Install the evaporator core in the housing.
3. Position the housing cover on the housing and install the cover attaching screws. Install the evaporator core air deflector attaching screws.
4. Install the blower motor resistor.
5. Install the wire harness and clips on the housing.
6. Install the heater-air conditioner in the vehicle.
7. Leak test, evacuate and charge the air conditioning system (Part 36-30, Adjustments). Check the system operation.

HEATER CORE

Removal

1. Remove the heater-air conditioner assembly from the vehicle.
2. Remove the wire harness from the assembly.
3. Remove the blower resistor from the air conditioner housing.
4. Remove the screws retaining the evaporator core air deflector to the air inlet end of the housing.
5. Remove the housing cover retaining screws and remove the cover from the housing.
6. Remove the evaporator core retaining screws and remove the evaporator core and hoses.
7. Remove the blower and adapter plate attaching screws, and remove the blower and adapter plate.
8. Remove the screws attaching the A/C door lever retainers to the door and remove the door from the bellcrank.
9. Remove the screws attaching the evaporator core air deflector to the housing and remove the assembly from the housing.
10. Remove the heater baffle from the housing.
11. Remove the heater core retainer attaching screws and remove the heater core.
12. Remove the insulators from the heater core.

Installation

1. Install the insulators in the heater core.
2. Position the heater core in the housing and install the retainers and attaching screws.
3. Install the heater baffle in the housing.
4. Install the air deflector plate in the housing.
5. Install the A/C door and retainers.
6. Install the blower assembly and adapter plate.
7. Install the evaporator core in the housing.
8. Position the housing cover on the housing and install the cover attaching screws. Install the evaporator core air deflector attaching screws.
9. Install the blower motor resistor.
10. Install the wire harness and clips on the housing.
11. Install the heater-air conditioner in the vehicle.

EXPANSION VALVE

Removal

1. Discharge the air conditioning system (Part 36-30, Adjustments).
2. Remove two screws attaching the thermostatic switch to the heater-air conditioner housing and position the switch to one side.
3. Remove the bolts and nuts attaching the heater-air conditioner to the dash panel. Then, lower the assembly to the floor of the vehicle.
4. Remove the housing cover retaining screws and remove the cover from the housing.
5. Remove the insulation from the expanson valve.
6. Disconnect the refrigerant hoses from the expansion valve.
7. Disconnect and remove the expansion valve from the evaporator.

Installation

1. Connect the expansion valve to the evaporator.
2. Connect the refrigerant hoses to the expansion valve.
3. Install the insulation on the expansion valve.
4. Position the housing cover and install the housing cover retaining screws.
5. Position the heater-air conditioner to the dash panel, and install the attaching bolts and nuts.
6. Place the thermostatic switch in position on the heater-air conditioner housing and install the attaching screws.
7. Leak test, evacuate, and charge the air conditioning system (Part 36-30, Adjustments). Check the system operation.

BLOWER MOTOR

Removal

1. Remove the heater-air conditioner assembly from the vehicle.
2. Remove the wire harness from the assembly.
3. Remove the blower resistor from the housing.
4. Remove the screws retaining the evaporator core air deflector to the air inlet end of the housing.
5. Remove housing cover retaining screws and remove the cover from the housing.
6. Remove the blower and adapter plate attaching screws, and remove the blower and adapter plate.
7. Remove the motor and blower from the adapter plate.

Installation

1. Install the motor and blower on the adapter plate.
2. Position the blower and adapter plate to the housing and install the attaching screws.
3. Position the cover on the housing and install the housing cover retaining screws. Install the evaporator core air deflector attaching screws.
4. Position the blower motor resistor to the housing, and install the attaching screws.
5. Install the wire harness and clips on the housing.
6. Install the heater-air conditioner in the vehicle.

BLOWER MOTOR SWITCH

L-SERIES—LINE HAUL MODELS

1. Remove the battery box cover, and disconnect the ground cable.
2. Remove the strip that retains the instrument cluster side pad (4 screws), and swing the hinged pad down to gain access to the switch.
3. Remove the heater control assembly (4 retaining screws).
4. Remove the control knob from the switch shaft by loosening the set screw, disconnect the push-on connector, and remove the switch from the control assembly (1 retaining screw).

L-SERIES—CITY DELIVERY MODELS

Remove the control knob from the switch shaft by loosening the set screw. Reaching up under the instrument panel, disconnect the multiple connector. Remove the switch-to-heater control retaining screw and remove the switch from under the instrument panel.

THERMOSTATIC SWITCH

Removal

1. Disconnect the wires from the thermostatic switch.
2. Remove two thermostatic switch attaching screws; pull the sensing tube from the evaporator; and

disconnect the control cable from the switch.

Installation

1. Connect the control cable to the thermostatic switch and adjust the cable.
2. Position the switch to the mounting bracket and install the two attaching screws.
3. Insert the sensing tube into the evaporator core.
4. Connect the wires to the thermostatic switch.
5. Check the operation of the air conditioner.

CONDENSER

Removal

1. Discharge the system into the garage exhaust system (Part 36-30, Adjustments).
2. Remove the condenser cover retaining screws and remove the condenser cover (Fig. 5).
3. Disconnect the refrigerant hoses at the condenser tubes.
4. Disconnect the wiring connectors to the condenser motor and the fan switch.
5. Remove the four bolts retaining the condenser assembly to the roof panel.
6. Lift the condenser assembly high enough to provide access to the four nuts holding the condenser coil to the bottom pan of the assembly and remove the four retaining nuts.
7. Lift the condenser out.

Installation

1. To install, position the condenser to the bottom pan and install the four retaining nuts.
2. Install the four bolts retaining the condenser assembly to the roof panel (Fig. 5).
3. Connect the wiring connectors, the condenser motor and fan switch. **Be sure that the wiring routing grommets are securely seated at the point of entry into the roof.**
4. Connect the refrigerant hoses to the condenser coil. **Replace the connector rubber washers.**
5. Water test for leaks through the roof before installing the inspection cover or condenser cover.
6. Position the condenser cover and install the cover retaining screws. The longer screws must go in the top of the condenser cover.
7. Leak test, evacuate and charge the system (Part 36-30, Adjustment).

RECEIVER TANK

Removal

1. Discharge the air conditioning system into the garage exhaust system (Part 36-30, Adjustment).
2. Remove the condenser housing cover and grille assembly (12 screws).
3. Disconnect the inlet and outlet pipes from the receiver and cap the pipe fittings.
4. Loosen the two receiver tank clamp screws and remove the receiver.

Installation

1. Insert the receiver into the clamp and tighten the clamp screws.
2. Connect the inlet and outlet pipes to the receiver.
3. Install the condenser housing cover and grille assembly.
4. Leak test, evacuate and charge the system (Part 36-30, Adjustment).

CONDENSER FAN MOTOR

Removal

1. Remove the condenser housing cover.
2. Loosen the fan bulb set screw and remove the fan from the motor shaft.
3. Disconnect the motor wires at the multiple connector.
4. Remove the motor mounting strap and remove the motor.

Installation

1. Position the motor in the motor cradle and install the mounting strap.
2. Connect the motor wires at the multiple connector.
3. Install the fan on the motor shaft and tighten the hub set screw.
4. Check the surface of the condenser for accumulation of leaves or other foreign material causing restricted air flow around the condenser fins.
5. Install the condenser housing cover.

CONDENSER FAN SWITCH

Removal

1. Remove the cover from the condenser housing.
2. Disconnect the wires from the fan switch.
3. Remove the insulating tape from the temperature sensing bulb and clamp.
4. Loosen the bulb clamp screws and remove the bulb from the clamp.
5. Remove the switch attaching screws and remove the switch.

Installation

1. Position the switch to the sheet metal flange on the condenser head and install the attaching screws.
2. Insert the temperature sensing bulb in the bulb clamp and tighten the clamp screws. Make certain that there is good contact between the bulb and the tube. Any foreign matter will insulate the tube from the bulb and cause malfunction.
3. Wrap the bulb and clamp with insulating tape.
4. Connect the wires to the fan switch.
5. Install the condenser housing cover.

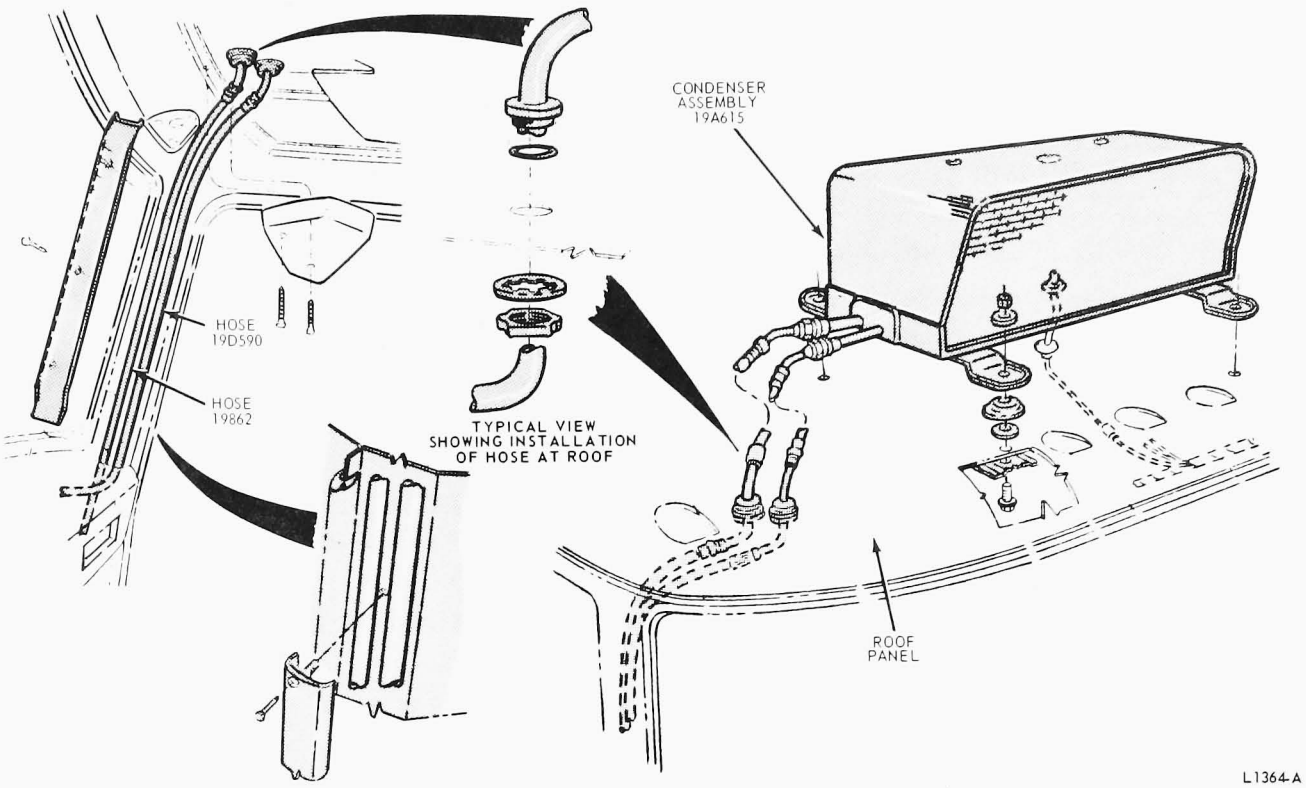

FIG. 5 Condenser Installation—L-Series

PART 36-63 W-Series Truck Heater-Air Conditioning System

Applies To W-Series Truck

COMPONENT INDEX	Page	COMPONENT INDEX	Page
DESCRIPTION AND OPERATION	63-01	REMOVAL AND INSTALLATION - Cont.	
REMOVAL AND INSTALLATION		Evaporator Blower Motor	63-04
Blower Switch	63-04	Evaporator Core and/or Expansion Valve	63-02
Condenser	63-04	Receiver Tank	63-04
Condenser Fan Motor	63-05	Safety Switch	63-04
Condenser Fan Switch	63-05	Thermostatic Switch	63-04

This part deals with the controls and components that are peculiar to the W-Series Truck Heater-Air Conditioning System. Part 36-63 gives the information and procedures required for servicing the refrigeration system which is common to all truck lines. Reference to both parts is necessary for complete servicing of the W-Series system.

DESCRIPTION AND OPERATION

The air conditioner used on W-Series trucks is intergral with the heating system. The evaporator core and heater core are located inside the heater-A/C housing. The condenser is located on the truck cab roof. All parts in the heater and evaporator housing are servicable in the cab. The water shut-off valve and the heater and refrigerant hoses are serviced on the underside of the engine cover.

The refrigerant lines are routed under the cab and are attached to the evaporator. The roof mounted condenser lines are routed along the cab right pillar post and are covered by three inspection covers. There is also an inspection cover in the roof at the point where the lines connect to the condenser.

There are five controls mounted on the left side of the heater-A/C unit. The forward control (No. 1, Fig. 1) operates a fresh-air damper door which should be open (control pulled out) for heater operation. This door should be closed for most efficient A/C operation (control pushed full-in).

The No. 2 knob performs two functions: It controls the temperature by operating the hot water control valve; and it controls the blower switch. Pulling the knob out increases the flow of hot water through the heater core to increase the temperature. Pushing the knob in, shuts off hot water flow through the core for **No Heat** or A/C operation. A shut-off valve at the engine is also provided for summer operation. Turning the knob clockwise turns on the blower for either heating or A/C operation.

The No. 3 control (Fig. 1) operates an air door that routes the discharge air either to the floor or through the frog eyes (moveable registers mounted on the housing cover). During heating operation: pushing the knob in gives minimum defrost through the frog eyes and maximum heat to the floor; pulling the knob out gives maximum defrost or spot defrost through the frog eyes. During A/C operation: pushing the knob in sends cooled air to the floor; pulling the knob out provides spot cooling through the frog eyes.

The No. 4 knob operates the thermostatic control switch, which senses the temperature of the evaporator fins and cycles the compressor on and off to maintain the interior temperature as desired. This control may be turned clockwise to provide cooler air temperature, or counterclockwise to the off position for heater operation. The temperature (thermostatic) control switch is wired in series with the fan switch, compressor clutch and high temperature shut-off switch. The high temperature shut-off switch is mounted on the liquid line inside the evaporator housing (before the expansion valve). This safety shut-off switch protects the system if the condensor system fails, by turning off the compressor clutch when head pressures exceed 360 psi. The switch opens the circuit to the clutch and disengages the compressor. The switch will close when the refrigerant temperature has cooled sufficiently at approximately 250 psi head pressure.

The No. 1 knob (Fig. 1) operates a by-pass damper located above the heater core. Pull the knob to close the door for heat, thereby permitting all of the air to be pulled through the heater core. When the knob is pushed in for air conditioning operation, additonal air delivery will be available because the open door will provide a by-pass air flow

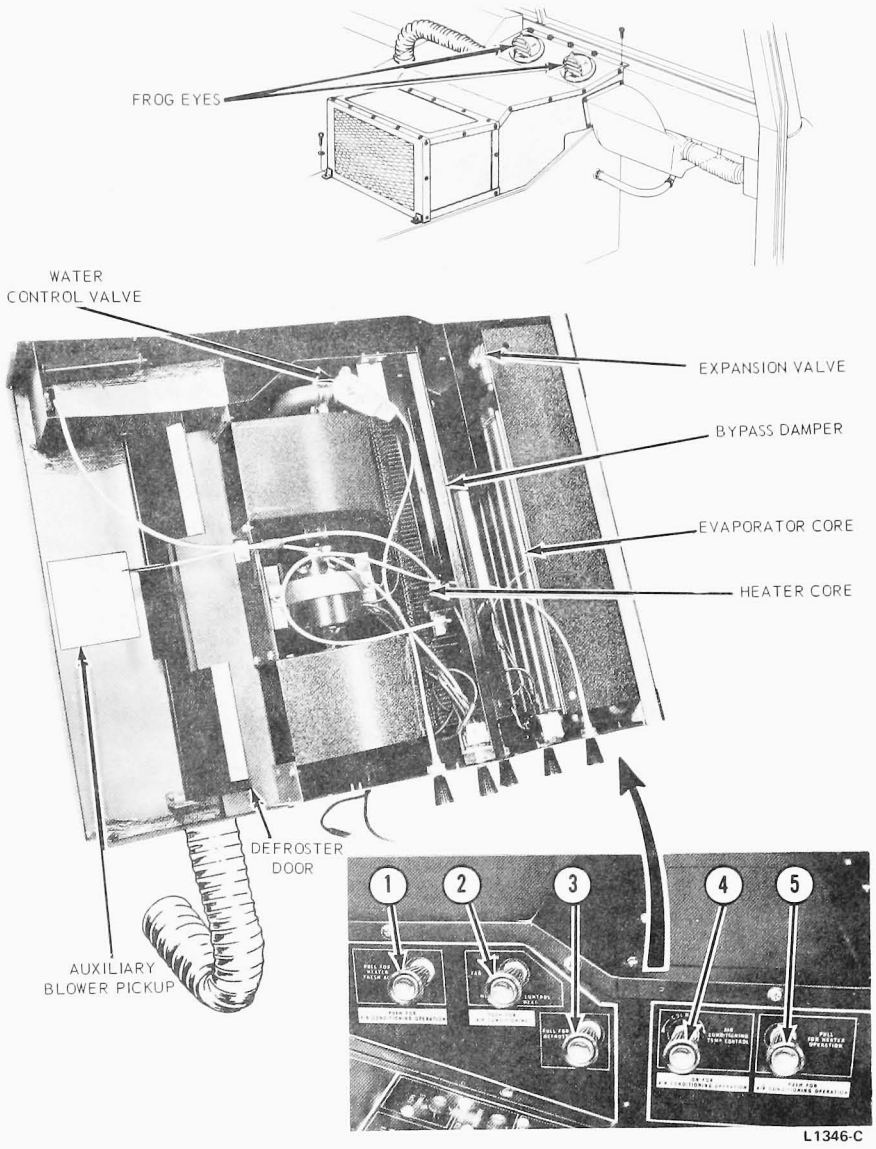

FIG. 1 W-Series Heater-A/C Control Location

over the top of the heater core and thus, reduce the air restriction in the unit.

In addition to the knob controls, frog eyes, and high-pressure safety switch, there is a motor switch in the roof top condenser that turns on the condenser fans when more condensing air is required. The motor switch senses the refrigerant temperature leaving the condenser. The condenser fans operate when the vehicle is stopped or moving slowly, or, when there is insufficient ram air to hold the head pressure down. The switch closes to operate the fans when the temperature in the refrigerant line reaches 135 to 140 degrees F. The condenser fans should start at 250-270 psi head pressure and stop at 200-220 psi head pressure.

The air conditioner electrical circuit has the same basic circuit as the heater blower motor circuit, but with some additional components. These additional components consists of the A/C temperature control, a temperature sensing bulb mounted in the evaporator fins, a high-temperature safety switch mounted on the liquid line inside the evaporator housing, a solenoid to actuate the compressor clutch, and a thermostatic switch to actuate two blower motors in the condenser housing.

REMOVAL AND INSTALLATION

EVAPORATOR CORE AND/OR EXPANSION VALVE

Removal

1. Discharge the system into the garage exhaust system (Part 36-30, Adjustments).
2. Disconnect the two evaporator refrigerant hoses at the underside of the engine cover (Fig. 2).
3. From inside the cab, remove the screws retaining the evaporator grille in place and remove the grille.
4. Remove the screws retaining the rear top cover in place and remove the rear top cover.
5. Remove the screws retaining the evaporator core insulation cover in place and remove the evaporator insulation cover.
6. Disconnect the two spade connectors from the thermostatic switch. Remove the high temperature shut-off switch from its retaining clip on the high pressure refrigerant line to the evaporator.
7. Remove the heater by-pass door operating cable from the heater by-pass door.
8. Remove the two bolts which retain the evaporator and housing assembly to the engine cover.
9. Remove the four screws (two on each side) which retain the evaporator housing assembly to the heater and blower unit. Remove the evaporator from the cab and place the assembly on a bench.
10. Remove the capillary sensing tube of

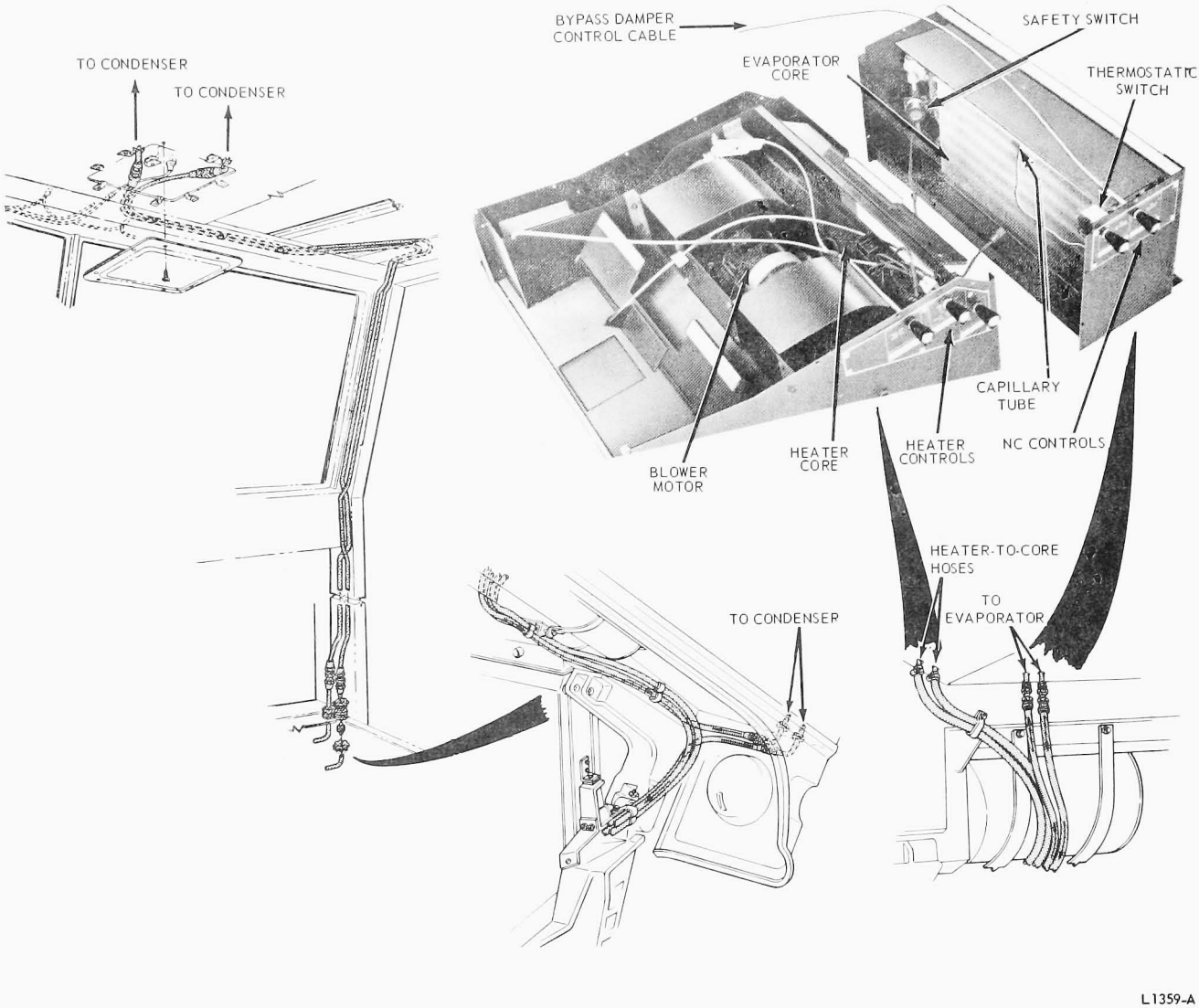

FIG. 2 Heater Air Conditioner Installation—W-Series

the thermostatic switch from the evaporator core. Note the position of the sensing tube so that it can be installed in the same area of the evaporator core during assembly.

11. Remove the screws which retain the evaporator core in its housing. Remove the sponge rubber insulating blocks (on the bottom of the evaporator housing) from around the evaporator inlet and outlet lines and lift the evaporator core from its housing.
12. Remove the insulating type covering the expansion valve sensing bulb clamp.
13. Remove the fitting on the inlet side of the expansion valve.
14. Loosen the flare nut and remove the expansion valve.

Installation

1. Install the expansion valve on the evaporator inlet pipe. Position the sensing bulb to the evaporator outlet pipe and retaining clamp and insulation.
2. Position the evaporator assembly in its housing and install the evaporator to housing retaining screws.
3. Position the sponge rubber insulating block around the evaporator inlet and outlet pipes on the bottom of the evaporator housing.
4. Insert the thermostatic switch capillary sensing tube in the evaporator core at the same location from which it was removed.
5. Position the evaporator assembly to the blower motor assembly in the cab and install the evaporator housing-to-blower motor housing reaining screws.
6. Install the two bolts which retain the evaporator and hoing assembly to the engine cover.
7. Install the heater by-pass door operating cable.
8. Install the high temperature shut-off switch retaining clamp and switch. **Make certain that there is no foreign material between the switch body and the refrigerant line. The switch is heat sensitive and any insulation between the switch body and its mounting point will cause a malfunction.**
9. Install the two spade wiring

connectors on the thermostatic switch assembly.
10. Position the evaporator core insulated-top cover and install the cover retaining screws.
11. Position the rear top cover retaining screws.
12. Position the evaporator grille and install the grille retaining screws.
13. Connect the two refrigerant hoses to the evaporator inlet and outlet pipes at the underside of the engine cover.
14. Leak test and charge the system.

EVAPORATOR BLOWER MOTOR

Removal
1. Remove the top cover attaching screws and remove the cover.
2. Remove eight screws attaching the two blower wheel housings to the heater-A/C housing.
3. Remove the Bowden wire clip holding the wire to air conditioner heat door and loosen the wire from the door.
4. Remove the two motor mounting strap attaching nuts and remove the strap.
5. Disconnect the motor leads from the blower switch and remove the blowers and motor from the housing.
6. Remove two nuts from each side of the motor and remove the blower housings.
7. Remove the set screw in each blower wheel hub and remove the blower wheels. **Note the rotation and blower wheel location before removing the wheels so they can be replaced in the same location.**

Installation
1. Position the blower wheels on the motor shaft in the same location as before removal and tighten the set screws. **Be sure they are installed on the correct side for proper rotation.**
2. Install the blower housings over the blower wheels.
3. Position the blower motor and wheels in the motor saddle.
4. Connect the blower motor wires to the blower switch.
5. Install the motor retaining strap.
6. Connect the Bowden wire to the air conditioner heat door. Adjust the cable and secure it in place with the cable clip.
7. Install the eight blower wheel housing attaching screws.
8. Check the operation of the blower motor and check to be sure that the blower wheels turn free. Then, install the housing top cover.

THERMOSTATIC SWITCH

Removal
1. Remove the grille and rear top cover from the heater-A/C housing.
2. Disconnect the two thermostatic switch wires.
3. Remove the thermostatic switch capillary tube from the evaporator core (Fig. 2). **Note the tube location in the core so that it can be installed in the same locations.**
4. Loosen the set screw and remove the knob from the thermostatic switch.
5. Remove the nut retaining the thermostatic switch to the housing and remove the switch.

Installation
1. Position the switch to the housing and install the retaining nut and knob.
2. Insert the capillary tube between the evaporator core fins in the same location as before removal.
3. Connect the two thermostatic switch wires.
4. Install the heater-A/C housing rear top cover and grille.

SAFETY SWITCH

Removal
1. Remove the rear grille assembly from the heater-A/C housing.
2. Remove the rear top cover from the housing.
3. Disconnect the safety switch wires (Fig. 2).
4. Insert a screwdriver between the switch and switch clamp. Then, twist the screwdriver and remove the switch.

Installation
1. Be sure that the refrigerant tube is clean and can make good contact with the switch. Then, insert the switch in the spring clamp. **Any foreign matter between the switch and the refrigerant tube will act as an insulator and cause malfunctions.**
2. Connect the safety switch wires.
3. Install the rear top cover and rear grille assembly on the heater-A/C housing.

BLOWER SWITCH

Removal
1. Remove the top cover from the housing.
2. Remove the clip retaining the Bowden cable to the water valve and disconnect the wire from the valve.
3. Disconnect the wires from the blower switch.
4. Remove the switch retaining nut and remove the switch.

Installation
1. Position the switch to the housing and install the retaining nut.
2. Connect the wires to the blower switch.
3. Connect the Bowden cable to the water valve and install the retaining clip.
4. Install the housing top cover.

CONDENSER

Removal
1. Discharge the system into the garage exhaust system.
2. Remove the condenser cover retaining screws and remove the condenser cover (Figs. 3 and 4).
3. Disconnect the refrigernat hoses at the condenser coil.
4. Disconnect the wiring connectors to the condenser motor and the fan switch.
5. Remove the four bolts retaining the condenser assembly to the roof panel.
6. Lift the condenser assembly high enough to provide access to the four nuts holding the condenser coil to the bottom pan of the assembly and remove the four retaining nuts.
7. Lift the condenser out.

Installation
1. To install, position the condenser to the bottom pan and install the four retaining nuts.
2. Install the four bolts retaining the condenser assembly to the roof panel.
3. Connect the wiring connectors, the condenser motor and fan switch. **Be sure that the wiring routing grommets are securely seated at the point of entry into the roof.**
4. Connect the refrigerant hoses to the condenser coil. **Replace the connector rubber washers.**
5. Water test for leaks through the roof before installing the inspection cover or condenser cover.
6. Position the condenser cover and install the cover retaining screws. The longer screws must go in the top of the condenser cover.
7. Leak test, evacuate and charge the system.

RECEIVER TANK

Removal
1. Discharge the air conditioning system into the garage exhaust system (Part 36-30, Adjustments).

2. Remove the condenser housing cover.
3. Disconnect the inlet and outlet pipes from the reciever and cap the pipe fittings.
4. Loosen the two reciever tank clamp screws and remove the receiver.

Installation

1. Insert the receiver into the clamp and tighten the clamp screws.
2. Connect the inlet and outlet pipes to the receiver.
3. Leak test, evacuate and charge the system (Part 36-30, Adjustments).
4. Install the condenser housing cover.

CONDENSER FAN MOTOR

Removal

1. Remove the condenser housing cover.
2. Loosen the fan bulb set screw and remove the fan from the motor shaft.
3. Disconnect the motor wires at the multiple connector.
4. Remove the motor mounting strap and remove the motor.

Installation

1. Position the motor in the motor cradle and install the mounting strap.
2. Connect the motor wires at the multiple connector.
3. Install the fan on the motor shaft and tighten the hub set screw.
4. Check the surface of the condenser for accumulation of leaves or other foreign material causing restricted air flow around the condenser fins.
5. Install the condenser housing cover.

CONDENSER FAN SWITCH

Removal

1. Remove the cover from the condenser housing.
2. Disconnect the wires from the fan switch.
3. Remove the insulating tape from the temperature sensing bulb and clamp.
4. Loosen the bulb clamp screws and remove the bulb from the clamp.

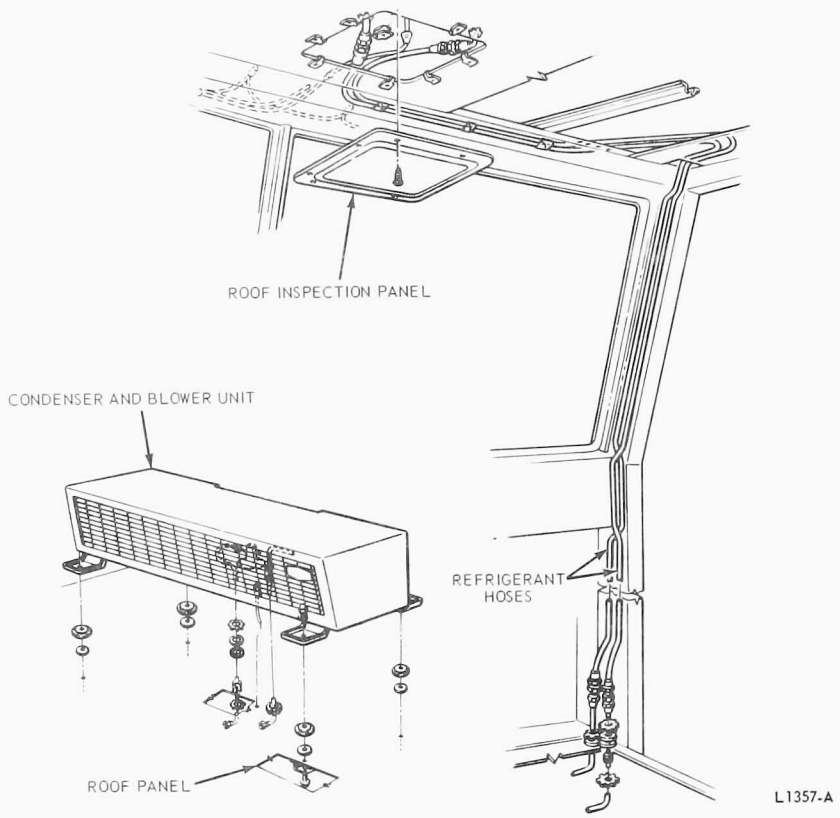

FIG. 3 Condenser Installation—W-Series

5. Remove the switch attaching screws and remove the switch.

Installation

1. Position the switch to the condenser head sheet and install the attaching screws.
2. Insert the temperature sensing bulb in the bulb clamp and tighten the clamp screws. Make certain that there is good contact between the bulb and the tube. Any foreign matter will insulate the tube from the bulb and cause malfunction.
3. Wrap the bulb and clamp with insulating tape.
4. Connect the wires to the fan switch.
5. Install the condenser housing.

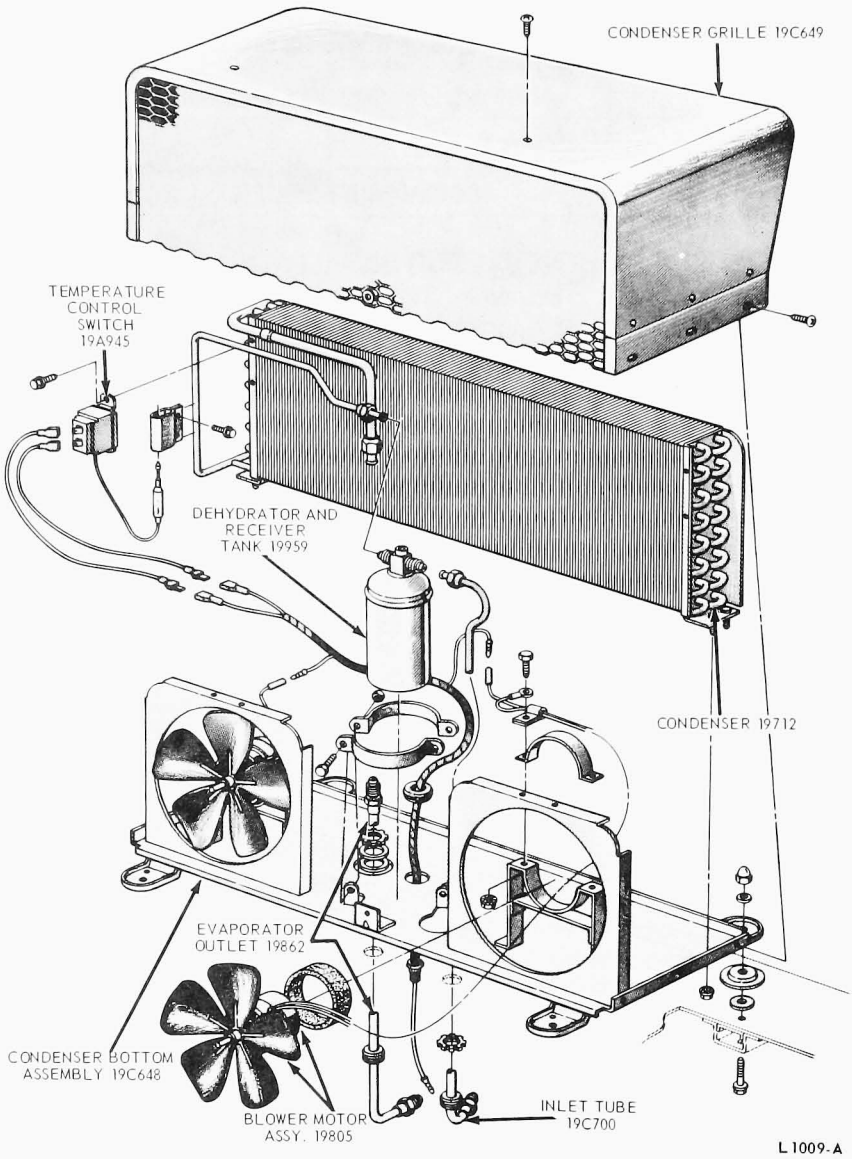

FIG. 4 W-Series Condenser, Receiver and Fan Installation

PART 36-64 C-Series Truck Air Conditioning System

Applies To C-Series Trucks

COMPONENT INDEX	Page
DESCRIPTION AND OPERATION	64-01
REMOVAL AND INSTALLATION	
Blower Switch	64-04
Condenser	64-03
Condenser Fan Motor	64-05
Condenser Overheat Switch	64-04
REMOVAL AND INSTALLATION - Cont.	
Evaporator Blower and Motor	64-04
Evaporator Core	64-02
Expansion Valve	64-03
Receiver Tank and/or Sight Glass	64-04
Relay and Circuit Breaker	64-05
Roof Mounted A/C Unit	64-02
Thermostatic Switch	64-05

This part deals with the controls and components that are peculiar to the C-Series truck air conditioning system. Part 36-30 gives the information and procedures required for servicing the refrigeration system which is common to all truck lines. Reference to both parts is necessary for complete servicing of the C-Series system.

DESCRIPTION AND OPERATION

The air conditioner used on C-Series trucks is installed on the cab roof, and directs cooled air into the cab through the roof mounted control panel and air register. All components of the system except the compressor and connecting refrigerant lines and electrical system wires are encased in the roof unit. This includes the condenser receiver tank, condenser blower, evaporator, evaporator blower, expansion valve and condenser overheat switch.

The refrigerant lines, which are used to transfer refrigerant between the compresor and the roof unit, are shown in Fig. 1. The refrigerant lines are connected to the frame side rail near the compressor and routed forward to the cab hinges. They are then routed rearward along the cab lower reinforcement, up the rear of the cab, and across the top of the cab to the roof unit.

Blower speed is controlled by the front knob on the roof control panel and the air temperature adjustment is the rear control knob. Temperature of the incoming air is maintained at the desired level by an adjustable thermostatic switch. This switch is actuated by changes in evaporator temperature. A rise in temperature closes the switch energizing the magnetic clutch and puts the compressor into operation. As the temperature reaches the desired low point, the thermostatic switch opens and the compressor stops. A condenser overheat switch is also used in this circuit. This switch will open the clutch circuit if the condenser overheats (Fig. 1).

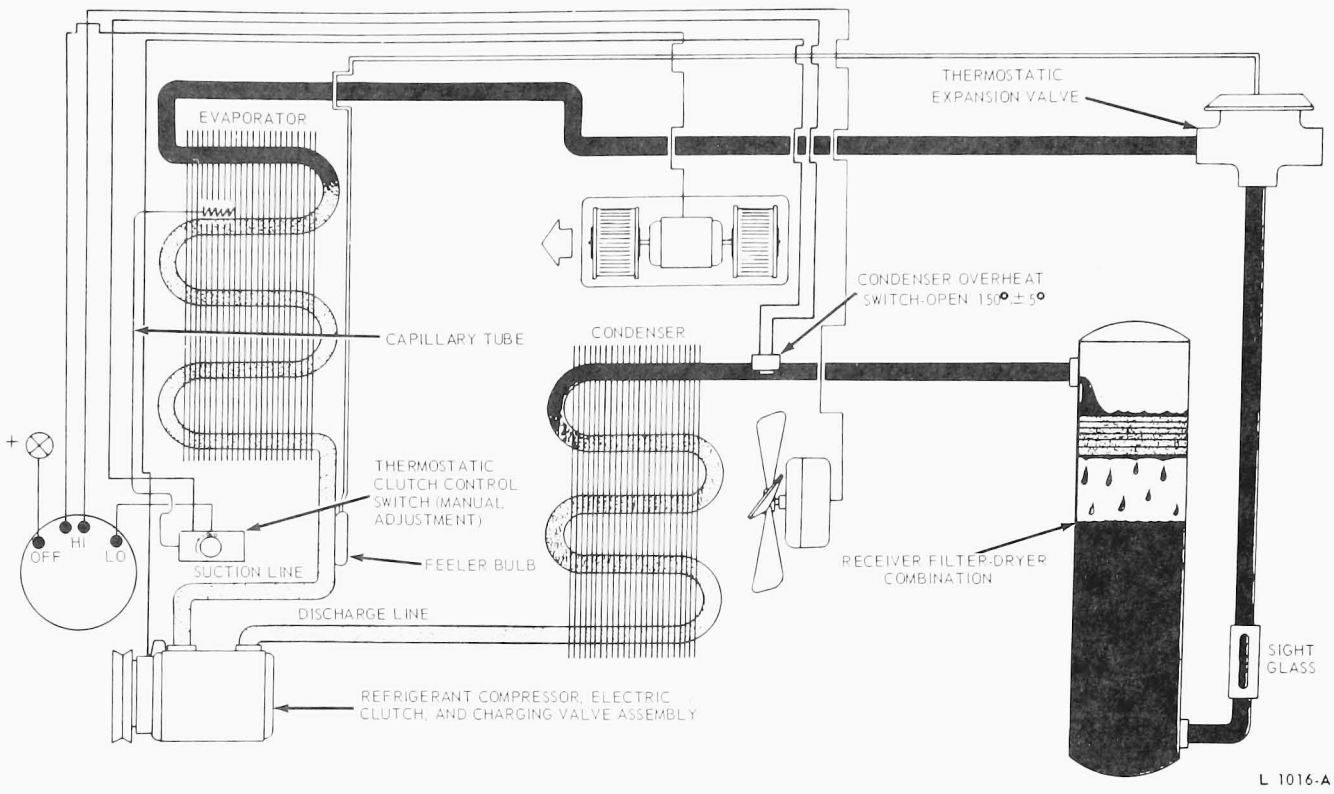

FIG. 1 Air Conditioning System Schematic— C-Series

REMOVAL AND INSTALLATION

ROOF-MOUNTED A/C UNIT

In cases of serious damage, or if for any other reason, it is desired to remove the entire air conditioning unit from the cab (Figs. 2 and 3), the following procedure should apply.

Removal

1. Discharge the system into the garage exhaust system.
2. Disconnect the hoses that lead to the compressor (Fig. 2) and cap the hoses and fittings. Tag these for correct connection later.
3. Disconnect the drain hose from the drain tube and clamp.
4. Remove the four top mounting nuts.
5. Raise the unit and block it up.
6. Reach under the unit and with a sharp knife cut all the way around the joint seal boot.
7. Disconnect the wires and remove the air conditioner from the cab.
8. Remove the bolts holding the joint seal boot to the bottom of the air conditioner, and remove the remains of the joint seal boot.
9. Remove the cemented portion of the joint seal boot from the roof of the cab and thoroughly clean the cemented area.

Installation

1. Bolt a new joint seal boot to the bottom of the air conditioner.
2. Apply a good coat of cement using care to distribute it evenly around the opening in the cab roof. Be sure to cover the area at least one inch out from the opening.
3. Apply cement to the joint seal boot flange using care to distribute it evenly and over the entire flange area.
4. Position the air conditioner in place blocking it up for clearance.
5. Reaching beneath the unit, position the joint seal boot flange and press it to the truck cab roof with the fingers. Work all air pockets from beneath the flange. Press firmly.
6. Connect the drain hose to the drain tube and install the clamp.
7. Connect the wires and remove the temporary blocks and install the air conditioner securing it at four positions.
8. Before installing the four top mounting bolts, check to be certain that the unit is correctly positioned.

It is advisable to slant the unit slightly so that the rear is lower than the front to promote drainage of condensed moisture through the drain tube.

9. Install the four top mounting bolts.
10. Connect the hoses that lead to the compressor taking special care to attach them to the connector that they were marked for during removal.
11. Leak test, evacuate and charge the system (Part 36-30).

EVAPORATOR CORE

1. Discharge the air conditioning system into the garage exhaust system (Part 36-30).
2. Remove the screws which retain the covering hood, and remove the hood and screen.

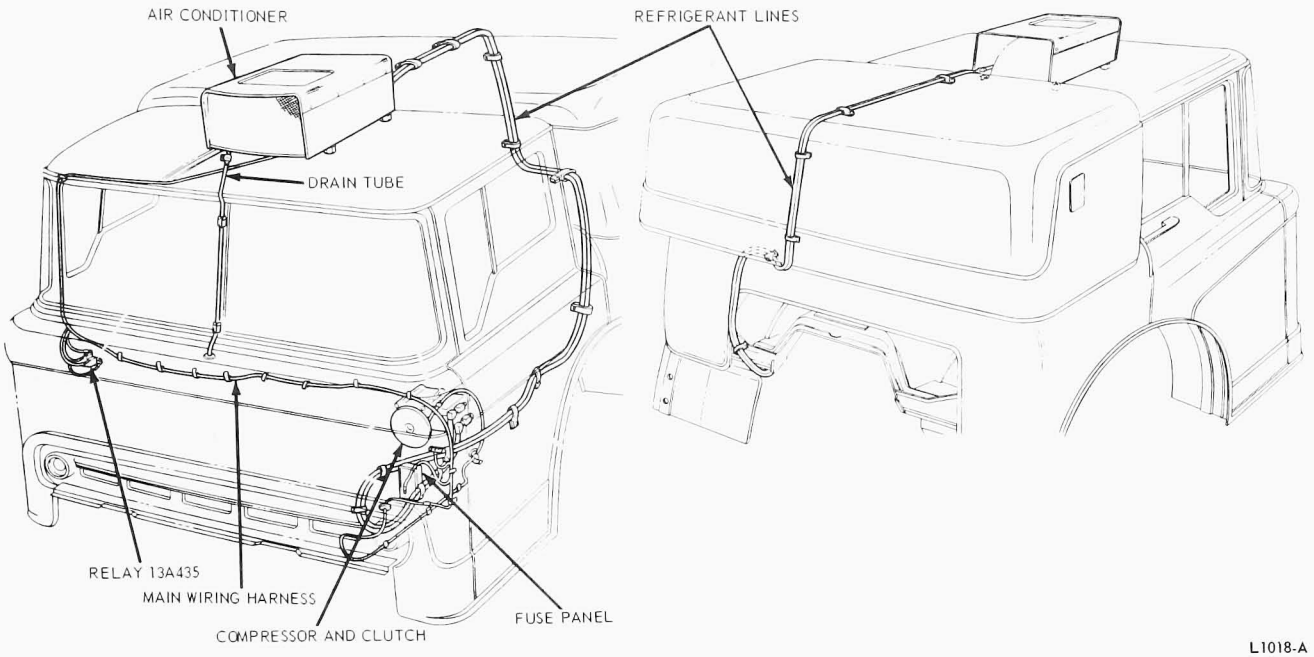

FIG. 2 Air Conditioner Installation—C-Series

3. Remove the evaporator cover, retaining screws, and remove the evaporator cover.
4. Disconnect the expansion valve and the evaporator outlet tube from the evaporator (Fig. 4).
5. Remove 2 nuts attaching the lower front edge of the evaporator to the bottom of the unit housing.
6. Remove 3 screws attaching each side of the blower to the rear side of the evaporator.
7. Pull the thermostatic switch temperature sensing tube from the evaporator core.
8. Remove the evaporator core from the unit housing.
9. Position the vaporator core in the unit housing and install the attaching screws and nuts.
10. Insert the thermostatic switch temperature sensing tube in the evaporator core.
11. Connect the expansion valve and the evaporator outlet tube to the evaporator core.
12. Leak test, evacuate, and charge the system (Part 36-30).
13. Install the evaporator cover.
14. Install the screen and covering hood and install the retaining screws.

CONDENSER

1. Discharge the air conditioning system into the garage exhaust system (Part 36-30).
2. Remove the screws which retain the covering hood and remove the hood and screen.
3. Disconnect the condenser inlet (top) pipe from the condenser and cap the fittings (Fig. 5).
4. Remove the 4 housing to cab retaining bolts and washers from inside the cab.
5. Disconnect the drain hose; lift the unit up from the cab and install blocks. **Do not damage the seal around the rubber boot.**
6. Disconnect the condenser outlet line at the underside of the unit housing and cap the fittings.
7. Remove 2 screws from the front of the condenser on each side and remove the condenser.
8. Position the condenser to the front of the unit and install the 4 retaining screws.
9. Connect the inlet and outlet tubes to the condenser.
10. Leak test, evacuate, and charge the system (Part 36-30).
11. Remove the blocks and lower the unit to the top of the cab. Connect the drain hose and install the 4 unit retaining bolts and washers.
12. Install the screen and covering hood and install the retaining screws.

EXPANSION VALVE

1. Discharge the air conditioning system into the garage exhaust system (Part 36-30, Adjustments).
2. Remove the screws which retain the covering hood, and remove the hood and screen.
3. Remove the evaporator cover retaining screws and remove the evaporator cover.
4. Remove the insulation from the expansion valve temperature bulb and remove the bulb clamp (Fig. 4).
5. Disconnect the valve from the evaporator inlet pipes and remove the valve.
6. Connect the valve to the evaporator inlet pipes.
7. Position the temperature bulb to the evaporator outlet pipe and install the clamp and insulation.

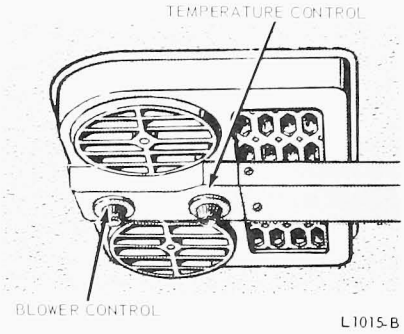

FIG. 3 Air Conditioner Control Panel and Air Registers—C-Series

8. Leak test, evacuate, and charge the system (Part 36-30).
9. Install the evaporator cover.
10. Install the screen and covering hood and install the retaining screws.

RECEIVER TANK AND/OR SIGHT GLASS

1. Discharge the air conditioning system into the garage exhaust system (Part 36-30).
2. Remove the screws which retain the covering hood, and remove the hood and screen.
3. Disconnect the inlet pipe from the top of the receiver and cap the fittings (Fig. 5).
4. Remove the 4 housing-to-cab retaining bolts and washers from inside the cab.
5. Disconnect the drain hose; lift the unit up from the cab and install blocks under the unit. **Do not damage the seal around the rubber boot.**
6. Disconnect the tube from the sight glass and cap the fittings.
7. Remove the 2 U-bolts attaching the receiver to the fan shroud and remove the receiver and sight glass.
8. Remove the sight glass from the receiver tank.
9. Install the sight glass to the receiver tank, making sure it can be seen after installation.
10. Position the receiver and sight glass to the shroud and install the U-bolts.
11. Connect the tube to the sight glass at the lower side of the unit.
12. Connect the tube to the top of the receiver tank.
13. Leak test, evacuate, and charge the system (Part 36-30).
14. Remove the blocks and lower the unit to the top of the cab. Connect the drain hose and install the 4 retaining bolts and washers.
15. Install the screen and covering hood and install the retaining screws.

EVAPORATOR BLOWER AND MOTOR

1. Remove the screws which retain the covering hood, and remove the hood and screen.
2. Remove the evaporator cover retaining screws and remove the evaporator cover.
3. Disconnect the blower motor wires.
4. Remove 2 nuts retaining the blower housing to the unit housing bottom (Fig. 4).
5. Remove 3 screws attaching each side of the blower to the rear side of the evaporator core and remove the blower and motor.
6. Position the blower and motor in the unit housing and install the attaching screws and nuts.
7. Connect the blower motor wires.
8. Install the evaporator cover.
9. Install the screen and covering hood and install the retaining screws.

BLOWER SWITCH

1. Pull the air register down and unhook the spring from the housing.
2. Pull the knob off the blower switch.
3. Remove the switch retaining nut and remove the wires from the switch and remove the switch.
4. Connect the wire to the switch. Install the switch in the opening and install the retaining nut and knob.
5. Position the air register to the opening and hook the spring inside the housing.

CONDENSER OVERHEAT SWITCH

1. Remove the screws which retain the covering hood, and remove the hood and screen.
2. Disconnect the switch wires at the terminal block (Fig. 5).

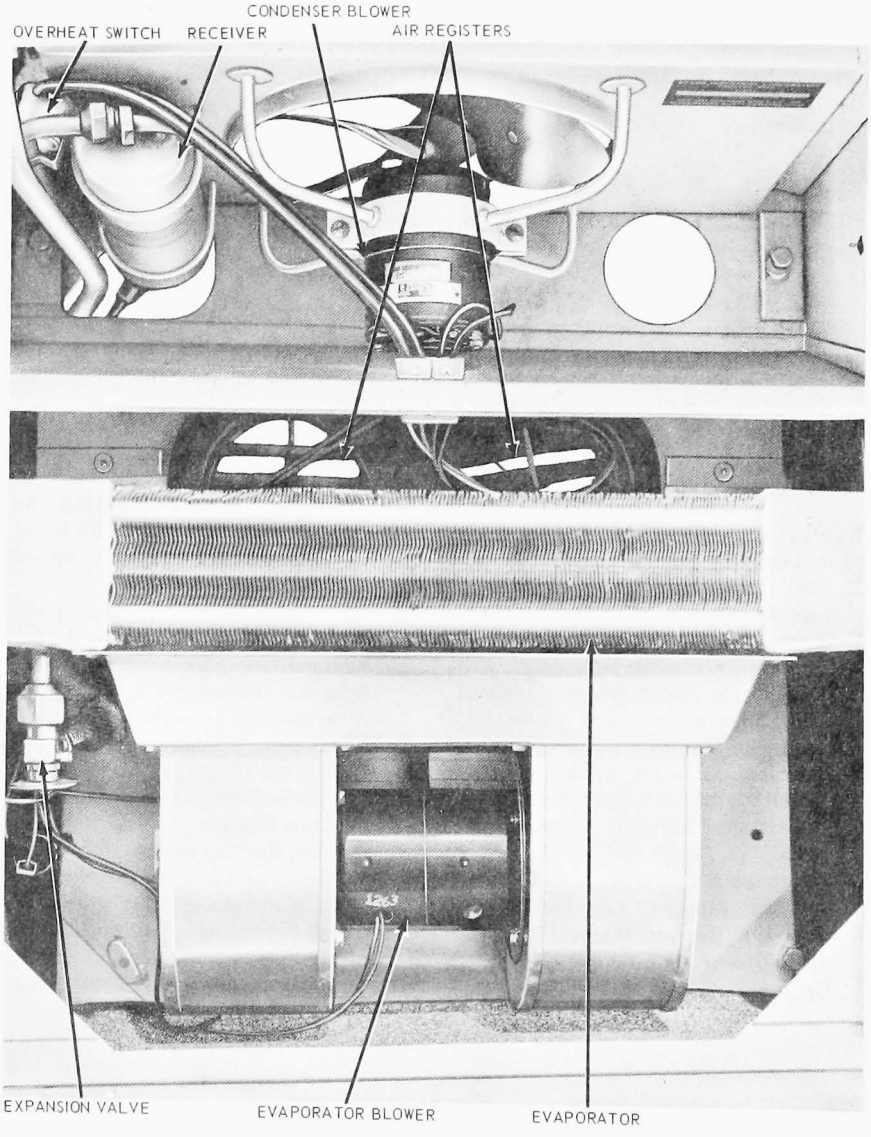

FIG. 4 C-Series Air Conditioner—Hood Removed

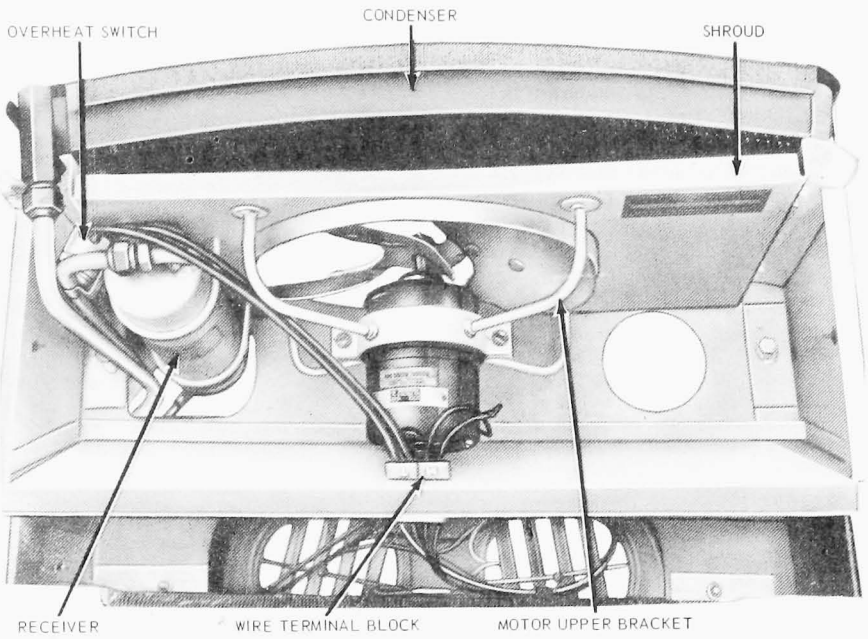

FIG. 5 C-Series Condenser, Receiver and Fan Installation

3. Pull the switch from the receiver outlet tube.
4. Clip the switch to the receiver outlet tube and connect the wires.
5. Install the screen and covering hood and install the retaining screws.

THERMOSTATIC SWITCH

1. Pull the air register down and unhook the spring from the housing.
2. Pull the knob off the thermostatic switch.
3. Remove the temperature sensing tube from the evaporator core.
4. Remove the switch retaining screws and remove the wires from the switch and remove the switch.
5. Connect the wires to the switch. Install the switch in the opening and install the retaining screws and knob.
6. Insert the temperature sensing tube into the evaporator core fins.
7. Position the air register to the opening and hook the spring inside the housing.

CONDENSER FAN MOTOR

1. Remove the screws which retain the covering hood, and remove the hood and screen.
2. Remove the nuts retaining the motor upper bracket to the fan shroud.
3. Remove 2 screws retaining the motor upper bracket to the lower bracket and remove the upper bracket (Fig. 5).
4. Disconnect the motor wires at the connector block and remove the fan motor. Remove the rubber insulator from the fan motor.
5. Note the location of the fan blade on the motor; then, remove the fan blade from the motor.
6. Install the fan blade on the motor in the same location as before removal.
7. Position the rubber insulator on the fan motor and position the motor in place in the motor lower bracket.
8. Install the motor upper bracket and install the retaining nuts and screws.
9. Connect the motor wires and check the operation of the motor and fan.
10. Check the surface of the condenser for accumulation of leaves or other foreign material causing restricted air flow around the condenser fins.
11. Install the screen and covering hood and install the retaining screws.

RELAY AND CIRCUIT BREAKER

A relay and circuit breaker are mounted on the lower lip of the instrument panel to the right of the glove box (Fig. 2).

Remove the two relay mounting bolts, nuts and washers and lower the relay assembly below the panel. Transfer the wires to the new assembly one at a time. Mount the assembly on the instrument panel, installing the black ground wire under the left mounting nut.

PART 36-65 Econoline Air Conditioning System

Applies To Econoline

COMPONENT INDEX	Page	COMPONENT INDEX	Page
DESCRIPTION AND OPERATION	65-01	REMOVAL AND INSTALLATION - Cont.	
REMOVAL AND INSTALLATION		Dehydrator-to-Evaporator Hose	65-03
Auxiliary Evaporator	65-04	Evaporator Core	65-02
Blower Motor - Auxiliary Evaporator	65-04	Evaporator-to-Compressor Hose	65-03
Blower Motor - Main Evaporator	65-03	Expansion Valve	65-02
Blower Switch	65-03	Thermostatic Switch	65-03
Condenser and/or Receiver	65-02		
Condenser-to-Compressor Hose	65-04		

This part deals with the controls and components that are peculiar to the Econoline air conditioning system. Part 36-30 gives the information and procedures required for servicing the refrigeration system which is common to all truck lines. Reference to both parts is necessary for complete servicing of the Econoline system.

DESCRIPTION AND OPERATION

The air conditioner used on the Econoline is a recirculating type, separate from the heater.

Controls for the unit are located on the left side panel directly behind the drivers seat (Fig. 1). The controls consist of two sliding levers. The left lever is the temperature control, while the right lever controls the blower motor.

The compressor and condenser assemblies are located at the front of the engine compartment. The evaporator locates against the left frame side rail and is bolted to the underside of the floor (Fig. 1). The evaporator must be serviced from under the vehicle.

Refrigerant hoses are routed from the engine compartment under the floor pan, to the evaporator.

The thermostatic switch is located inside the unit control housing.

The blower motor switch is also located in the control housing.

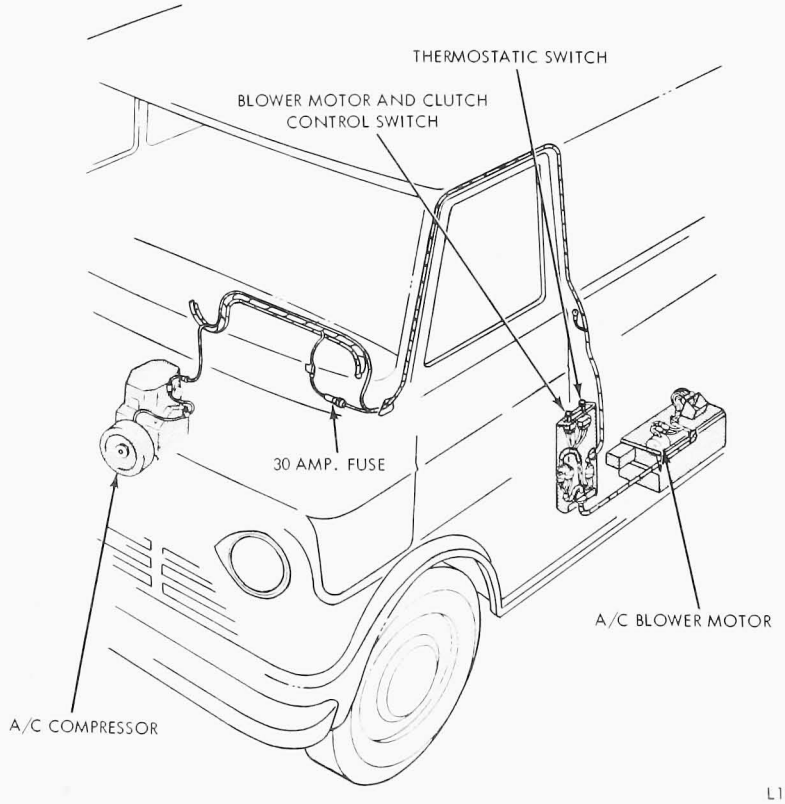

FIG. 1 Econoline Air Conditioner System

REMOVAL AND INSTALLATION

EVAPORATOR CORE

Removal

1. Remove the engine cover.
2. Remove the back seat if the vehicle is so equipped. Pull the carpet or mat out of the way.
3. Remove the control housing cover and disconnect the wiring harness. Tie the harness out of the way.
4. Remove the screws retaining the register to the floor and remove the register (Fig. 2).
5. Position the sensor tube out of the evaporator core.
6. Position a floor jack under the evaporator case and raise the jack until it just contacts the evaporator. Disconnect the hoses at the evaporator.
7. Working inside the vehicle, remove the screws retaining the rear air duct and remove the duct.
8. Remove the 10 bolts retaining the evaporator to the floor pan.
9. Working under the vehicle, remove the front and rear evaporator retaining nuts. Lower the evaporator case on the jack while pulling the wire through the floor pan opening. Remove the evaporator from under the vehicle.
10. Remove the screws retaining the expansion valve cover and remove the cover. Then, remove the cover seal.
11. Remove the gasket from the top of the case.
12. Remove the screws from the top rail which positions the evaporator core to the case. Remove the rail.
13. Remove the insulating tape from the expansion valve and remove the valve from the core.
14. Remove the 4 screws retaining the evaporator core to the case and lift the core out of the case.

Installation

1. Position the evaporator core in the case and install the 4 retaining screws. Then, install the top rail which positions the core in the case.
2. Install the expansion valve and seal. Wrap the valve with insulating tape.
3. Install the expansion valve cover.
4. Position a new gasket on top of the evaporator case (Fig. 2).
5. Position the evaporator case on a jack and raise the case into position against the floor pan. Install the front and rear retaining nuts. Route the wire harness up through the floor pan. Connect the hoses at the evaporator then lower the jack.

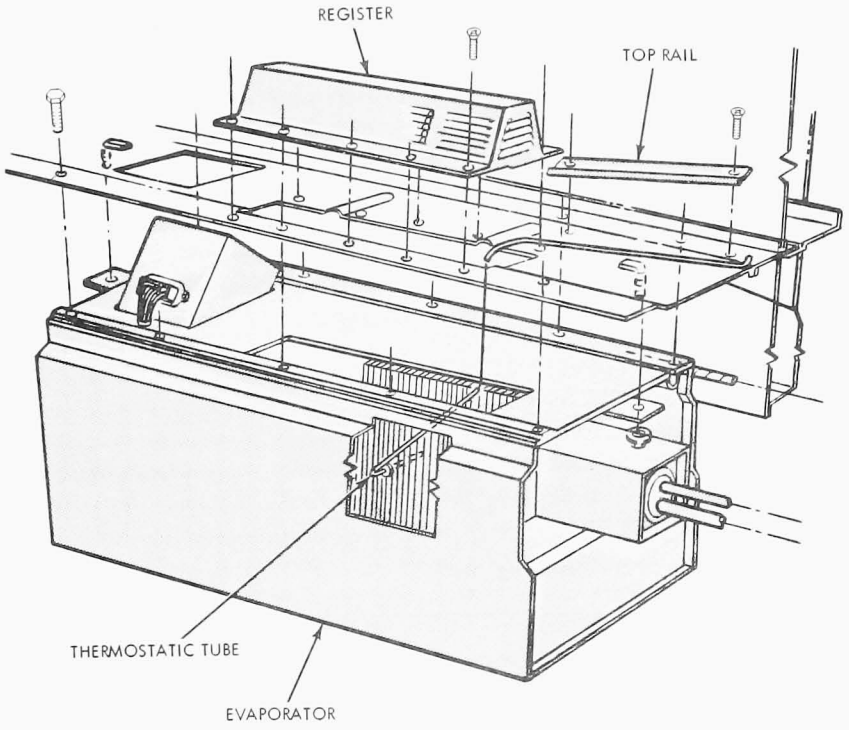

FIG. 2 Evaporator Installation—Econoline

6. From inside the vehicle install the 10 evaporator retaining bolts.
7. Position the sensor tube into the evaporator core.
8. Install the air duct.
9. Install the register.
10. Reposition the carpet and install the rear seat, if equipped.
11. Connect the wires in the control housing and install the cover.
12. Install the engine cover.

CONDENSER AND/OR RECEIVER TANK

Removal

1. Open the hood and remove the hood lock assembly mounting bracket.
2. Disconnect both lines at the condenser and receiver tank and position the lines out of the way.
3. Remove the 4 bolts retaining the condenser assembly to the radiator and lift the condenser out of the vehicle.
4. If the receiver tank is to be replaced, remove it from the condenser assembly.

Installation

1. If the receiver tank has been removed from the condenser, install the receiver.
2. Position the condenser assembly on the radiator and install the 4 retaining bolts.
3. Connect the lines at the condenser and receiver tank.
4. Install the hood lock mounting bracket.

EXPANSION VALVE

Removal

1. Raise the vehicle on a hoist.
2. If the vehicle is equipped with an auxiliary heater, disconnect the 2 heater hoses and allow the coolant to drain into a pan.
3. Remove the 4 nuts retaining the auxiliary heater to the floor and push the heater up and out of the way.
4. Disconnect the two hoses at the expansion valve.
5. Remove the expansion valve cover and seal from the evaporator.
6. Unwrap the insulating tape from the expansion valve.
7. Remove the expansion valve from the evaporator.

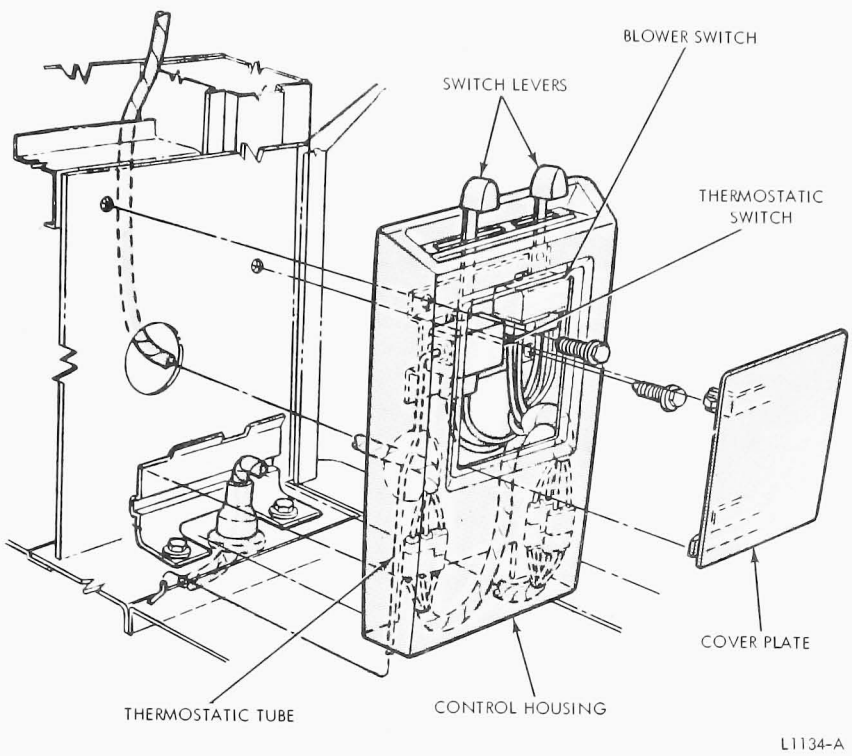

FIG. 3 Air Conditioner Control Housing—Econoline

Installation
1. Install the expansion valve to the evaporator.
2. Wrap the expansion valve with insulating tape.
3. Install the expansion valve cover and seal on the evaporator.
4. Connect the lines to the expansion valve.
5. If the vehicle is equipped with an auxiliary heater, position the heater against the floor pan and install the retaining nuts.
6. Connect the auxiliary heater hoses.
7. Lower the vehicle and add coolant as required.

BLOWER MOTOR

Removal
1. Remove the evaporator and core from the vehicle following the procedure outlined previously in this section.
2. Disconnect the blower motor wires.
3. Remove the 4 retaining screws and remove the blower motor assembly from the case.

Installation
1. Position the blower motor in the case and install the retaining screws.
2. Connect the blower motor wires.
3. Install the evaporator core and evaporator assembly in the vehicle as outlined previously in this section.

THERMOSTATIC SWITCH

Removal
1. Position the carpet or mat out of the way.
2. Remove the evaporator register from the floor pan.
3. Position the sensor tube out of the evaporator core.
4. Remove the control housing cover (Fig. 3).
5. Remove the Allen screw that retains the switch lever to the switch and remove the lever.
6. Disconnect the wires to the thermostatic switch and remove the retaining screw. Remove the switch and tube assembly.

Installation
1. Position the switch and tube assembly in the housing. Route the sensor tube into the evaporator core. Connect the switch wires and install the retaining screw.
2. Install the switch lever.
3. Install the control housing cover.
4. Install the register in the floor.
5. Reposition the carpet or mat.
6. Check the operation of the blower.

BLOWER SWITCH

Removal
1. Remove the control housing cover.
2. Remove the Allen screw retaining the switch lever to the blower switch and remove the lever (Fig. 3).
3. Disconnect the wires at the blower switch.
4. Remove the blower switch retaining screw and remove the switch.

Installation
1. Position the blower switch in the control housing and install the retaining screw.
2. Connect the switch wires.
3. Install the switch lever.
4. Install the control housing cover.

DEHYDRATOR-TO-EVAPORATOR HOSE

Removal
1. Remove the engine cover and the air cleaner.
2. Discharge the air conditioning system (Part 36-30, Adjustments).
3. Raise the vehicle on a hoist.
4. Remove the clamp retaining the hoses at the condenser (Fig. 4). Disconnect the hose at the receiver tank.
5. Remove the 2 strap retainers and hose clamp, from inside the engine compartment.
6. Working under the vehicle remove the strap retainers and hose clamps. Remove the hose from the evaporator clamp, and remove the hose from the vehicle.

Installation
1. Position the new hose in the vehicle and route the hose properly (Fig. 4).
2. Connect the hose at the evaporator.
3. Position the hose in the hose clamps and install the clamps on the underside of the vehicle. Also install the strap retainers.
4. Connect the hose at the receiver tank.
5. Position the hoses in the hose clamps and install the clamps. Also install the strap retainers.
6. Install the air cleaner.
7. Leak test, evacuate and charge the air conditioning system (Part 36-30, Adjustments).
8. Install the engine cover.

EVAPORATOR-TO-COMPRESSOR HOSE

Removal
1. Remove the engine cover and the air cleaner.
2. Raise the vehicle on a hoist.
3. Discharge the air conditioning system (Part 36-30, Adjustments).

4. Disconnect the hose at the service valve on the compressor.
5. Remove the hose clamps and strap retainers from inside the engine compartment.
6. Working under the vehicle, remove the hose clamps and strap retainers.
7. Disconnect the hose at the evaporator and remove the hose from the vehicle.

Installation

1. Position the hose in the vehicle and route the hose properly.
2. Connect the hose at the evaporator.
3. Install the hose clamps and strap retainers on the underside of the vehicle.
4. Connect the hose to the service valve on the compressor.
5. Install the hose clamps and strap retainers.
6. Leak test, evacuate and charge the air conditioning system.
7. Install the air cleaner and the engine cover.

CONDENSER-TO-COMPRESSOR HOSE

Removal

1. Remove the engine cover and the air cleaner.
2. Discharge the air conditioning system (Part 36-30, Adjustments).
3. Remove the hose at the condenser.
4. Disconnect the hose at the condenser.
5. Remove the hose from the service valve on the compressor.

Installation

1. Position the hose in the vehicle and connect the hose to the service valve on the compressor.
2. Connect the hose at the condenser.
3. Install the hose clamps at the condenser.
4. Leak test, evacuate and charge the air conditioning system (Part 36-30, Adjustments).
5. Install the air cleaner and the engine cover.

AUXILIARY EVAPORATOR ASSEMBLY

The auxiliary evaporator is located inside the body under the first bench seat on all A/C equipped bus models. On van models, it is mounted forward of the left rear wheel housing.

Both the main evaporator and the auxiliary evaporator are operated by the same control levers.

1. Remove the bench seat.
2. Raise the vehicle, and install safety stands.

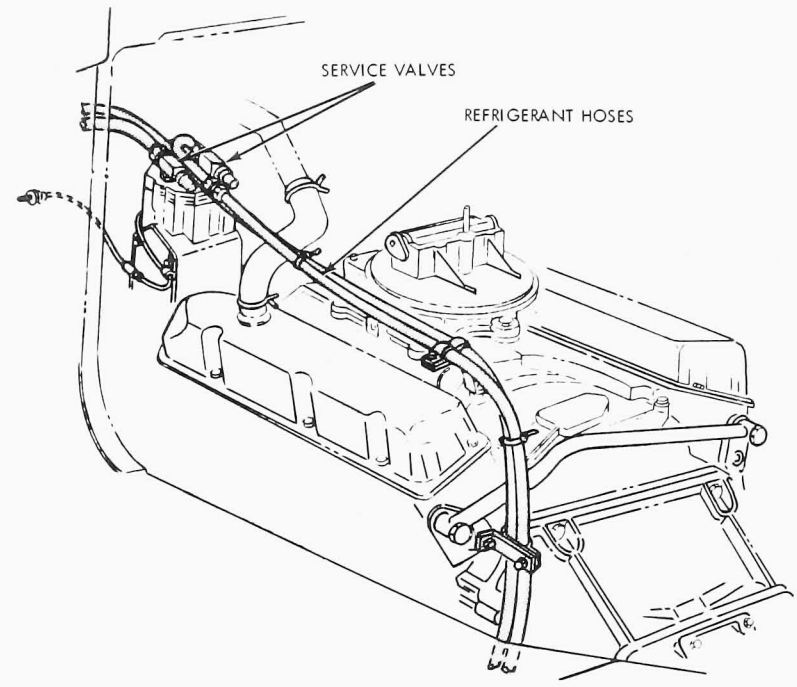

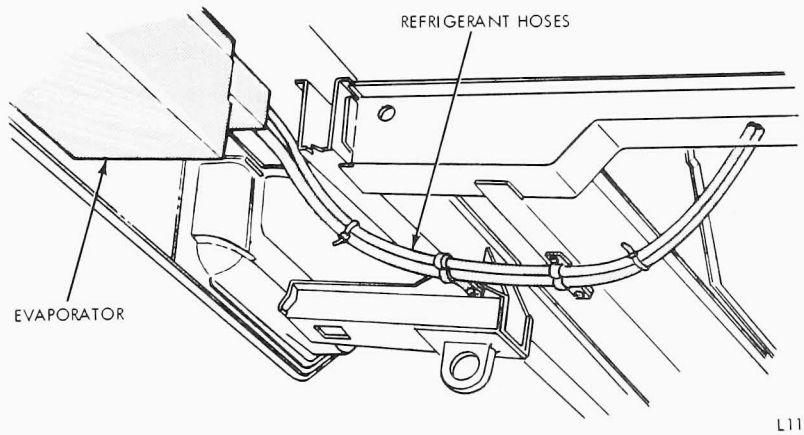

L1132-A

FIG. 4 Refrigerant Hose Routing—Econoline

3. From under the vehicle, disconnect the wiring harness at the connector, and the suction and liquid lines at the quick disconnect fitting (Fig. 5).

Bleed off refrigerant pressure before disconnecting the liquid and suction lines.

4. Remove the four washer-head type nuts that retain the evaporator to the floor pan.
5. Remove the safety stands, lower the vehicle, and remove the evaporator assembly from inside the vehicle.
6. After installing the evaporator, check all fittings and connections for tightness and recharge the system as outlined in (Part 36-30, Adjustments).

BLOWER MOTOR AND FAN ASSEMBLY—AUXILIARY EVAPORATOR

The blower motor and fan assembly can be removed and replaced without removing the auxiliary evaporator assembly from the vehicle.

1. Remove the bench seat.
2. Remove the four evaporator cover retaining screws, and remove the cover from the case.
3. Disconnect the blower motor leads, remove the two motor retaining bolts and nuts from the motor support, and lift the motor assembly from the evaporator housing.

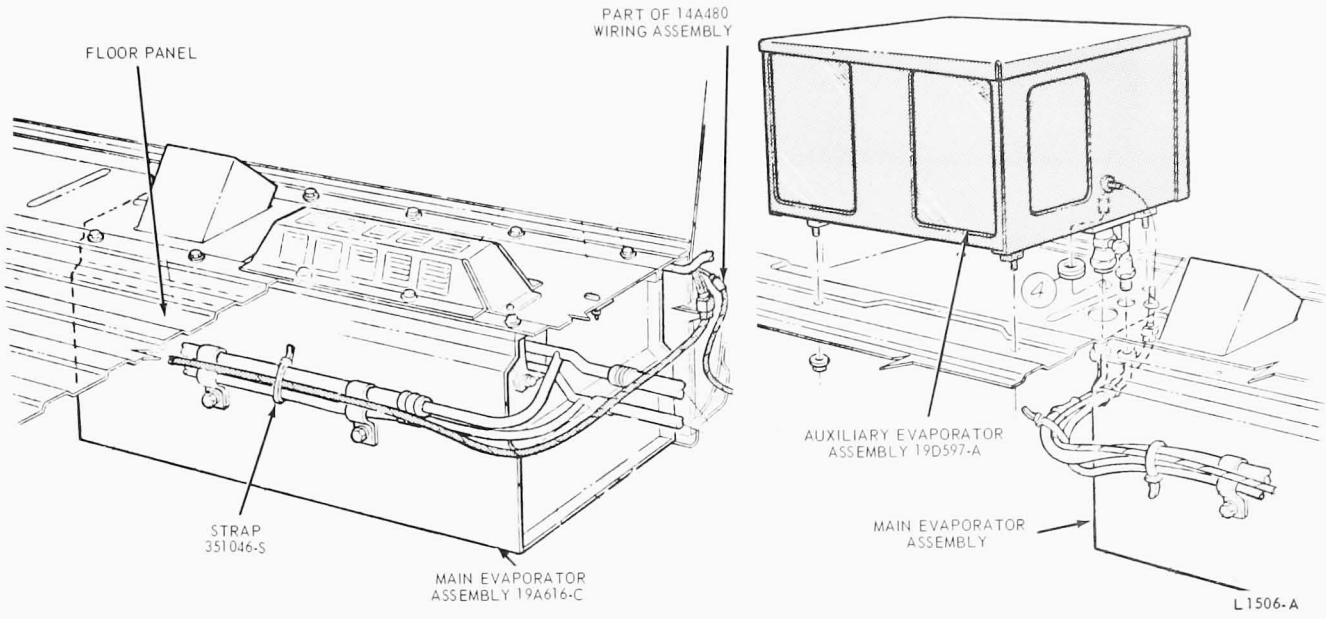

FIG. 5 Dual Evaporator Installation—Econoline

Seats

GROUP 41

PART 41-01	PAGE	PART 41-70	PAGE
Seat Tracks - Manual	41-01-01	Bostrom Viking Seat	41-70-01
PART 41-14		**PART 41-71**	
Conventional Rear Seats	41-14-01	Bostrom Westcoaster Seat	41-71-01
PART 41-25		**PART 41-73**	
Seat Back Latch - Manual	41-25-01	Unison No. 675 Roadrunner Seat	41-73-01
PART 41-50		**PART 41-74**	
Seat and Shoulder Belts	41-50-01	Cush-N-Aire Seat	41-74-01
PART 41-60			
Seat Trim	41-60-01		

PART 41-01 Seat Tracks — Manual

ADJUSTMENTS

TIE ROD

Tie rod adjustment will affect only the passenger side of the seat. In case the latch retaining the track fails to release, turn the adjusting turnbuckle (Fig. 1), clockwise enough to shorten the tie rod travel and release the track latch. If the latch fails to secure the seat travel, turn the adjusting turnbuckle counterclockwise enough to allow the latch to snap into locking position.

SEAT BACK—ANGLE

C-SERIES

Loosen the stop bolt lock nuts (Fig. 2). Slide the bolt through the bracket on the seat cushion to obtain the desired seat back angle. Then, tighten the lock nuts against the seat cushion bracket. Adjust both stop bolts the same amount to avoid twisting the seat back frame.

REMOVAL AND INSTALLATION

SEAT TRACK—MANUAL BENCH TYPE

F-100-750 AND L-AND W-SERIES

Removal

1. Remove the seat track-to-floor pan retaining screw and washer assemblies three on each side and lift the seat and track assembly out of the vehicle. See Figure 3.
2. Disconnect the seat track latch tie rod from the latches on the seat tracks.
3. Remove the seat track-to-seat cushion (screw and washers) and remove the tracks from the cushion.

Installation

1. Lubricate the seat track assemblies. Assemble the seat tracks to the cushion assembly with the anti-squeak pads (and spacers if so equipped) fitting over the studs between the track and cushion (Fig. 3). Install the track-to-cushion screw and washers and tighten to specification (see Specifications Section).
2. Connect the tie rod to the latch on each seat track.
3. Lift the seat and track assembly into the cab and secure it to the floor pan

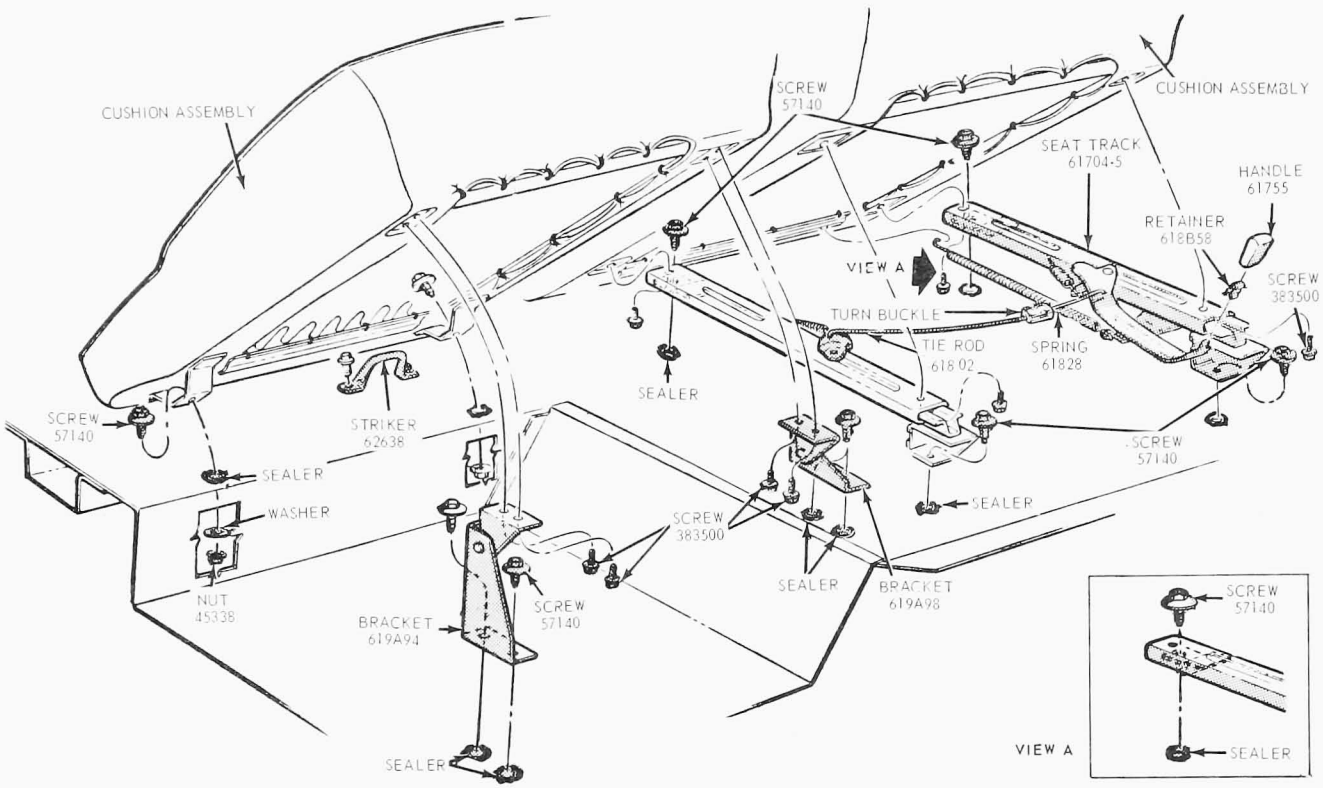

FIG. 1 Bronco Seat and Track Installation

R1509-C

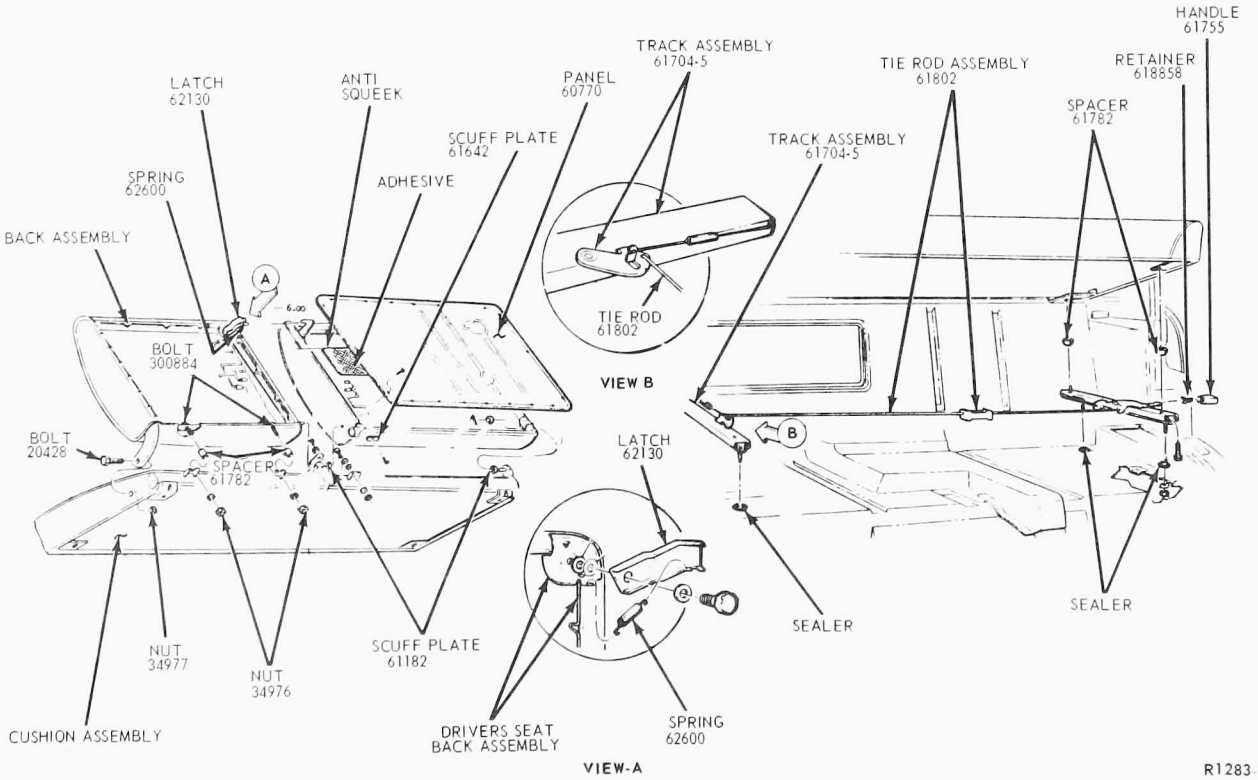

R1283-C

FIG. 2 Seat Back and Track Installation—C-Series

with the retaining screw and washer assemblies. Tighten the screws to specifications (see Specifications in this Part).

C-SERIES

Removal

1. Remove two seat track-to-floor pan retaining nuts and washers from each track (Fig. 2).
2. Lift the seat up to free the seat track studs from the floor pan, and then remove the seat and track assembly from the vehicle.
3. Disconnect the latch spring from the latch on the right seat track assembly and disconnect the latch tie rod from the latch (Fig. 2).
4. Remove the two right seat track-to-cushion screw and washer assemblies and remove the track from the cushion.
5. Separate the tie rod from the adjuster handle on the left track. Remove the two left track-to-cushion screw and washer assemblies and remove the track and adjuster handle assembly from the cushion.

Installation

1. Position the left seat track to the cushion with the anti-squeaks and spacers between the track and cushion. Position the retaining nut on the upper side of the cushion frame front support, install the two retaining screw and washer assemblies, and tighten to specification (see Specifications in this Part).
2. Connect the latch tie rod to the latch on the right track and insert the opposite end of the rod into the hole in the adjuster handle on the left track, and then position the right track to the cushion with the anti-squeaks and spacers between the track and cushion.
3. Position the right seat track and cushion. Position the retaining nut on the upper side of the cushion frame front support, install the two retaining screw and washer assemblies, and tighten to specification (see Specifications in this Part).
4. Lift the seat and track assembly into the cab and position it so that the track studs enter their proper holes in the floor pan.
5. Install the four track-to-floor pan washers and retaining nuts, and tighten to specification (see Specifications in this Part).

SEAT TRACK—BUCKET TYPE

BRONCO

Removal

1. Move the seat to the forward position and remove the screws and washer attaching the rear of each track to the floor pan (Fig. 1).
2. Remove the screws and washer attaching the front end of the seat tracks to the floor pan and remove the seat and track from the vehicle.
3. Disconnect the assist spring from the seat and track.
4. Remove four screws attaching the tracks to the seat frame and separate the tracks from the seat frame.

Installation

1. Position the seat tracks to the seat frame and install the four attaching screws. Tighten to specification in this section.
2. Connect the tie rod to the seat tracks and the assist spring to the seat frame and track (Fig. 1).
3. Place a small amount of sealer around the seat track front and rear attaching holes and position the seat track in the vehicle.

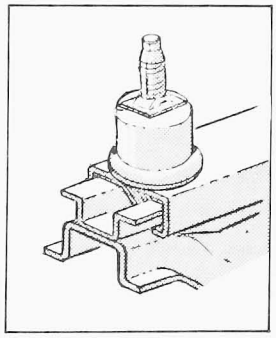

VIEW A

F-500 THROUGH F-750

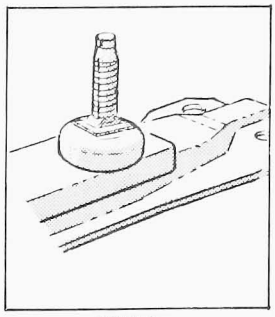

VIEW B

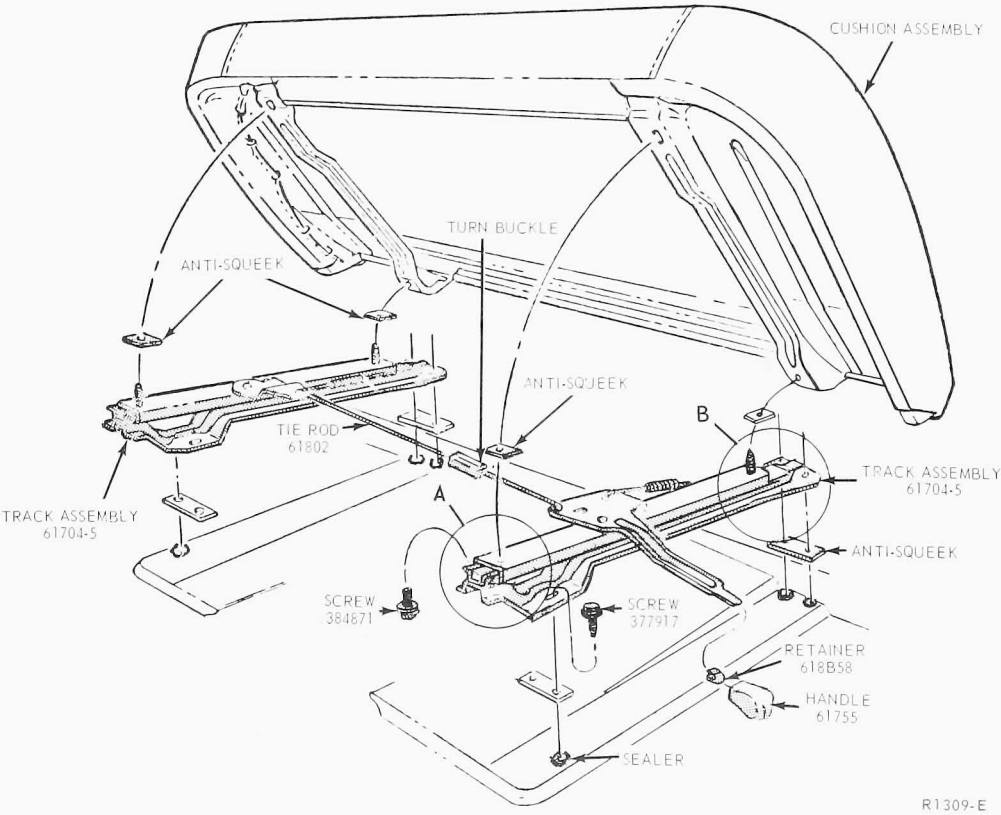

FIG. 3 Bench Seat and Track Installation—F-100 through 750 Series, Typical of L-and W-Series

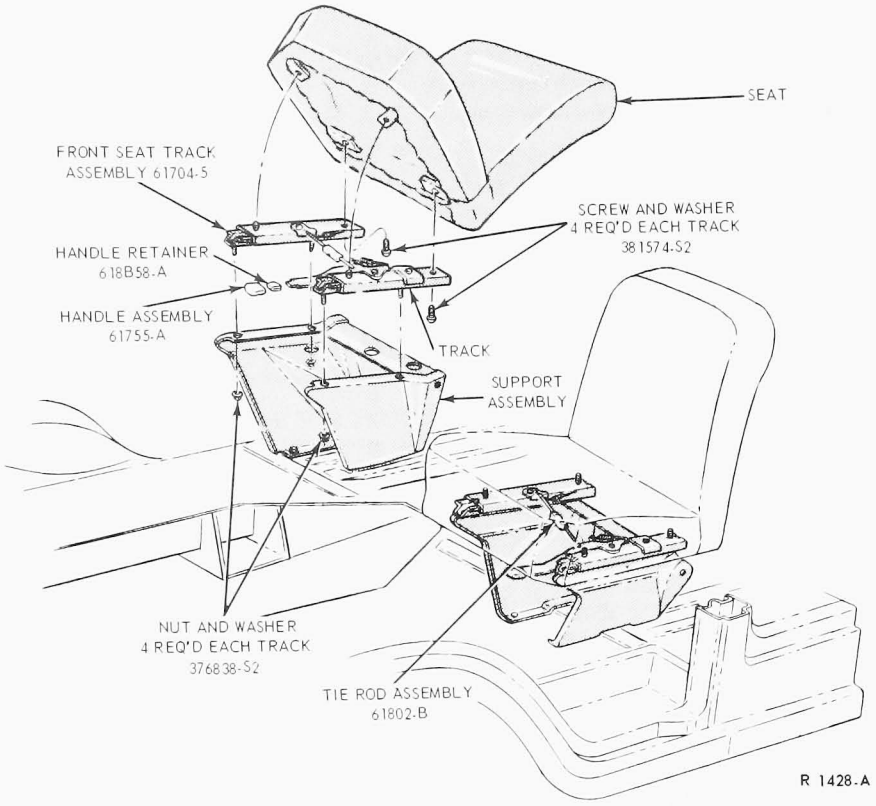

FIG. 4 Bucket Seat and Track Installation—Econoline

4. Install the screws and washer seat track-to-floor.
5. Tighten to specification in this section.

ECONOLINE

Removal

This procedure applies to both right and left front seats.

1. Remove the seat track-to-support nuts and lift the seat and track assembly from its support (Fig. 4).
2. If either seat or track is being replaced, remove the track-to-seat screws and separate the seat from the track.
3. If only the seat is being replaced, proceed to step 1, under Installation. If only the track is being replaced, loosen the turnbuckle and detach the tie rod from the bracket on the right track and the release lever on the left track. Remove the handle assembly and retainer from the lever. Remove the small spring from each track and remove the assist spring. Transfer all these parts to the replacement track.

Installation

1. Position the track assembly to the seat and secure it with the attaching screws and washers. Tighten to specification (see Specifications in this Part).
2. Position the seat and track assembly on the support assembly and secure it with the attaching nuts and washers. Tighten to specifications in this part.

FOLD-DOWN FRONT PASSENGER SEAT

ECONOLINE

The fold-down seat is attached to the support assembly with six nuts. The support assembly is attached to the floor pan with three screws and washers. The rear latch striker is attached to the floor pan with two screws and washers. Tighten all bolts and nuts securely (Fig. 5).

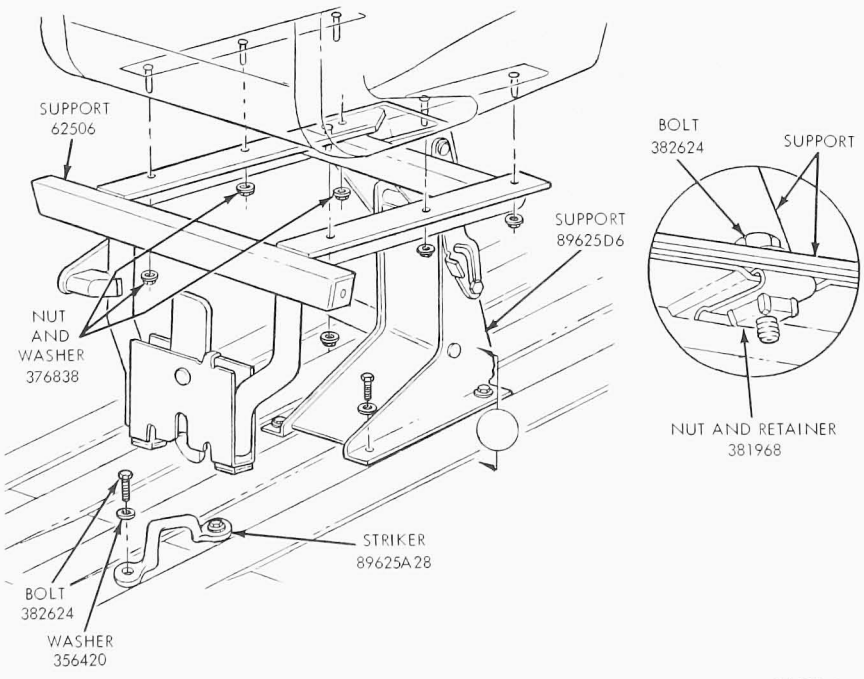

FIG. 5 Fold-Down Front Passenger Seat—Econoline

SPECIFICATIONS

SEAT TRACK-MANUAL-TORQUE FT-LBS						
	Seat Track-to-Cushion			Seat Track-to-Floor Pan		
Vehicle	Bench	Bucket	Split Bench	Bench	Bucket	Split Bench
Bronco	–	7-17	–	–	7-17	–
Econoline	–	7-17	–	–	7-17	–
C-Series	12-20	–	–	12-20	12-20	–
F-Series	12-20	–	–	18-32	–	–
L-Series	12-20	–	–	12-20	–	–

CR1757-B

PART 41-14 Conventional Rear Seats

Applies To Bronco and Econoline

REMOVAL AND INSTALLATION

SEAT CUSHION AND BACK ASSEMBLY

BRONCO

The rear seat cushion and back assembly is attached to the floor with four retaining bolts (Fig. 1). When installing the seat assembly to the floor, tighten the retaining bolts to 7-12 ft-lb.

ECONOLINE

The rear seat and cushion assemblies are attached to the floor pan as shown in Fig. 2. When installing the seat assembly to the floor, tighten the attaching bolts to 25-45 ft-lb.

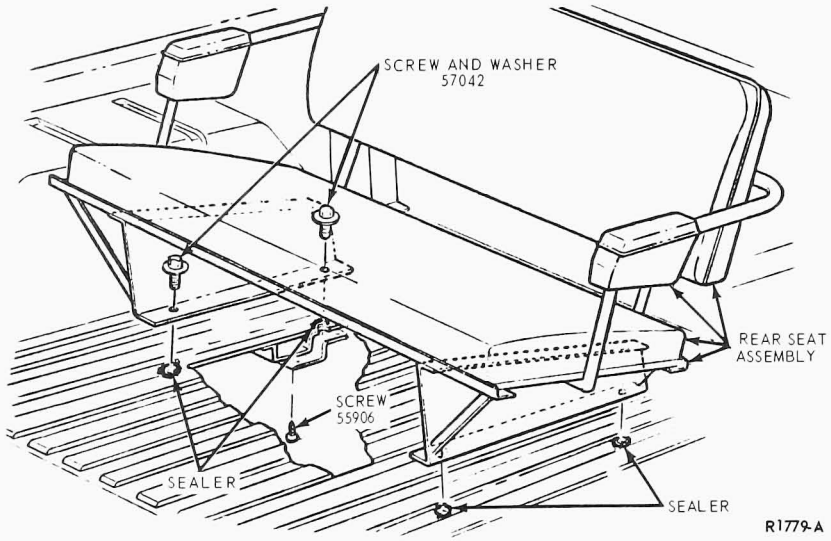

FIG. 1 Rear Seat Cushion and Back Assembly—Bronco

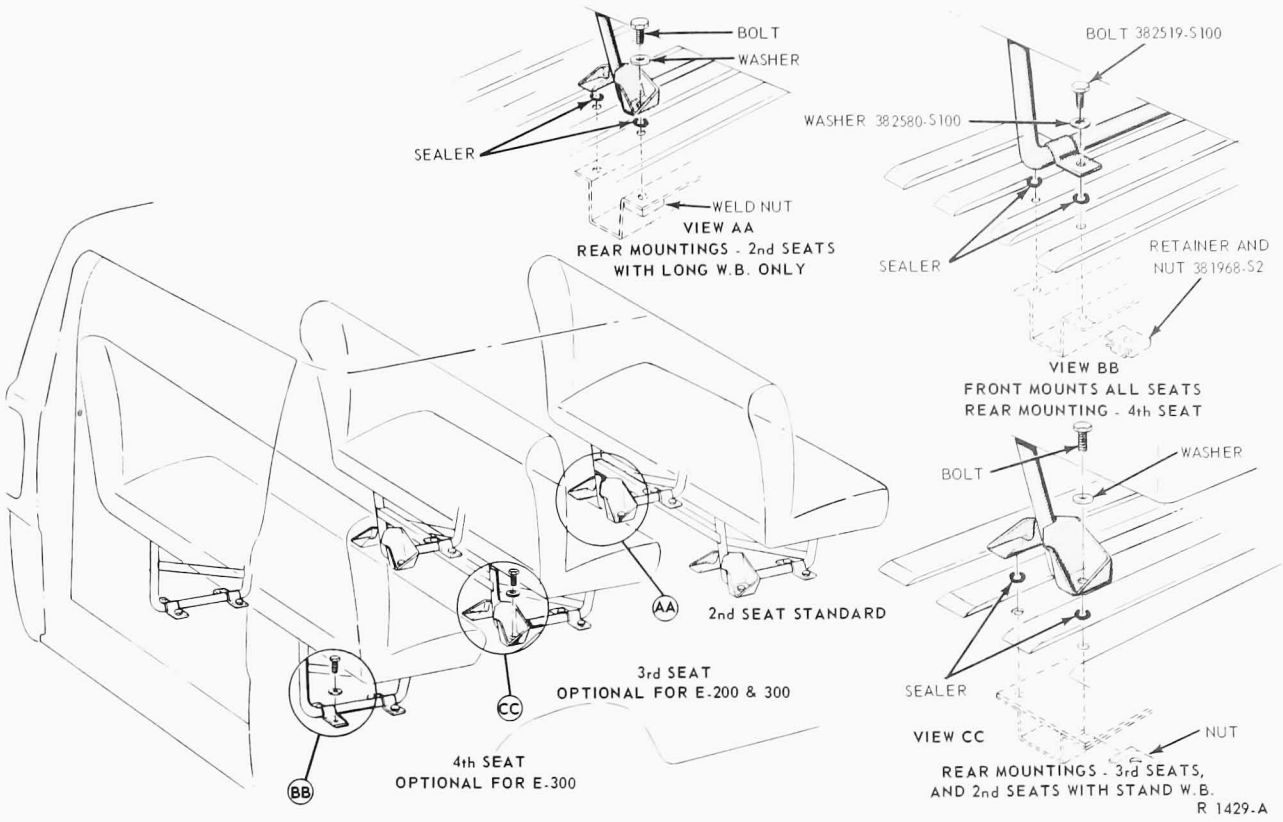

FIG. 2 Rear Seat Cushion and Back Assemblies—Econoline

PART 41-25 Seat Back Latch

GENERAL INFORMATION

SEAT BACK LATCH

All folding front seats have a latch designed to hold the seat back in the normal position. For rear seat passenger entry and exit (Bronco), and to gain access to the storage compartment (F-Series), a handle on the side of the seat back releases the seat back latch.

If the seat back will not latch in position or the latch mechanism will not unlock, it may be necessary to remove the side shield and/or remove the seat back trim cover far enough to inspect the latch mechanism. Then replace any damaged parts to put the latch system in proper working order (Fig. 1 and 2).

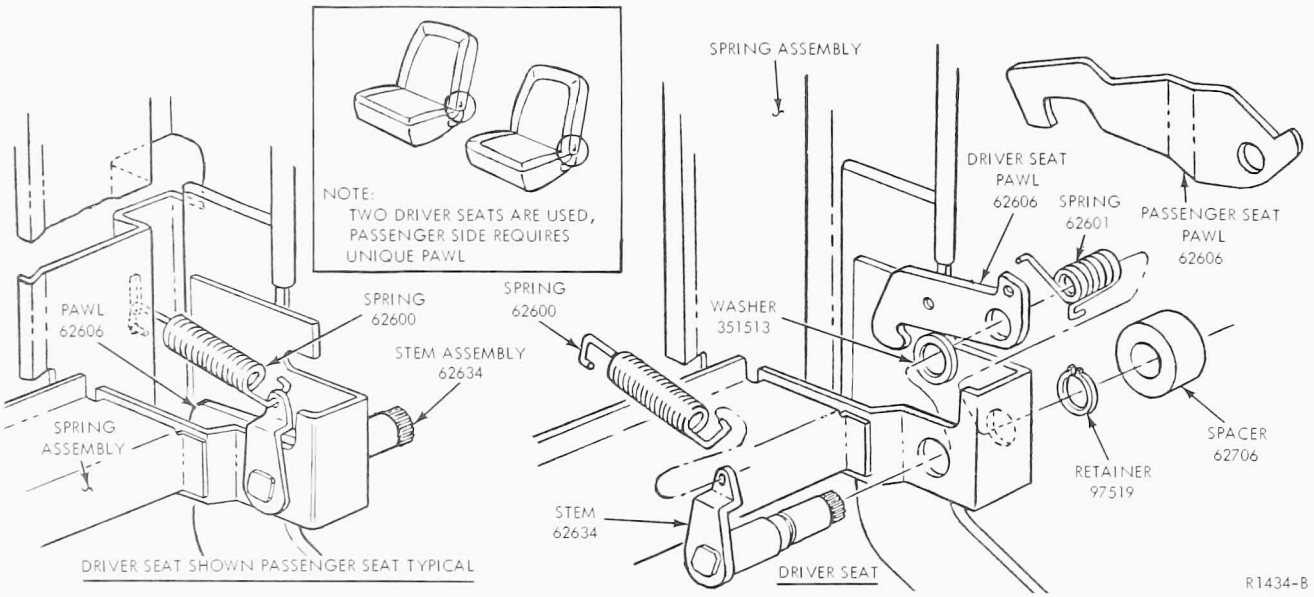

FIG. 1 Seat Back Latch Installation—Bronco

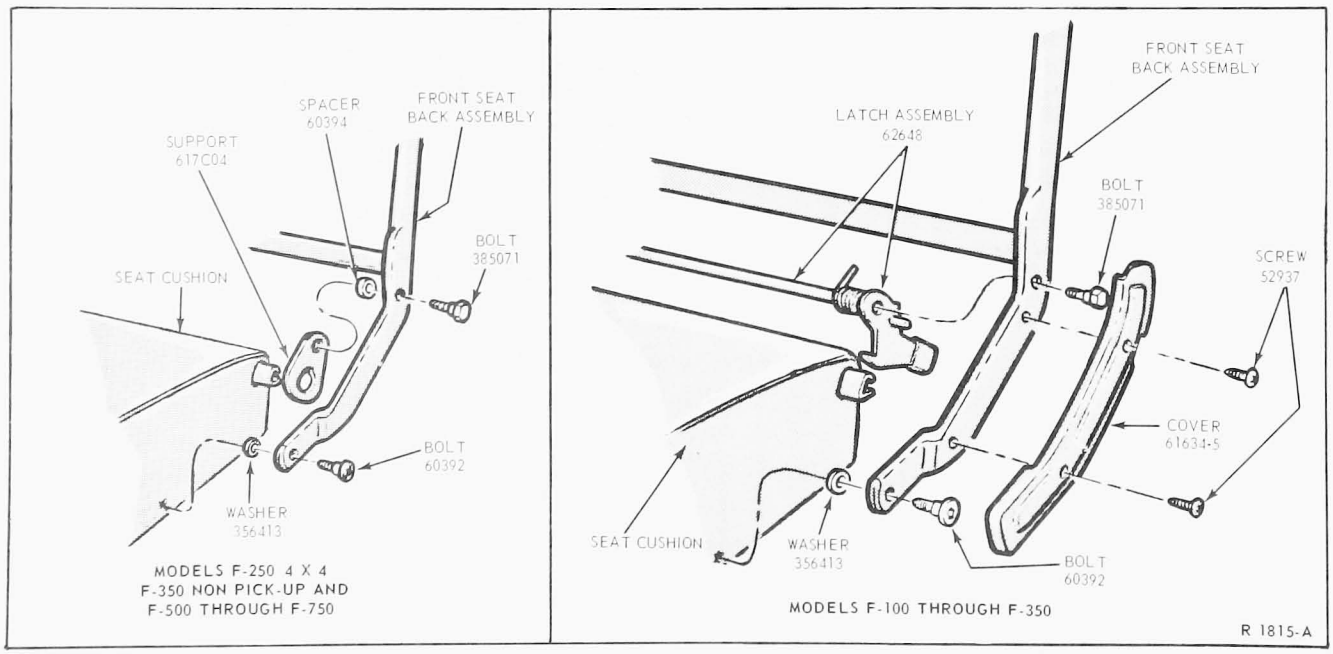

FIG. 2 Seat Back Latch Installation—F-Series

PART 41-50 Seat and Shoulder Belts

COMPONENT INDEX	Page	COMPONENT INDEX	Page
CLEANING	50-06	MAJOR REPAIR OPERATIONS	50-05
GENERAL INFORMATION	50-01	REMOVAL AND INSTALLATION	50-05
		SPECIFICATIONS	50-06

GENERAL INFORMATION

SEAT AND SHOULDER BELTS

The seat belts and shoulder belts are factory installed in their proper locations. If the seat belts or shoulder belts are removed for any reason, they should be installed as shown in figs. 1 through 8. Sealer should be placed around all seat anchor bolt holes in the floor pan. Tighten the anchor bolts to the specification shown in this Part.

Belt assemblies must be installed in matched sets as received and must not be interchanged between vehicle models. The position of inboard front seat belts at the tunnel shall be pointing in a forward direction, plus or minus 15 degrees to the horizontal-all vehicle lines. All other seat belt installations not specifically dimensioned (except those specifically designed to rotate), shall be positioned pointing in a forward direction parallel to the centerline of the vehicle plus or minus 15 degrees.

If a component portion (buckle portion, retractor portion, etc.) of a seat belt or shoulder belt assembly is non-functional or damaged, the entire assembly (buckle, tongue and shoulder belt portions) must be replaced. The replacement assembly must be installed as a matched set and the identification labels on all portions must bear exactly the same code, date of manufacture and manufacturer's name. **Under no circumstances are seat belt or shoulder belt components to be replaced as individual components.** Tool T70P-2100-A is used to remove all round seat and shoulder belt bolts.

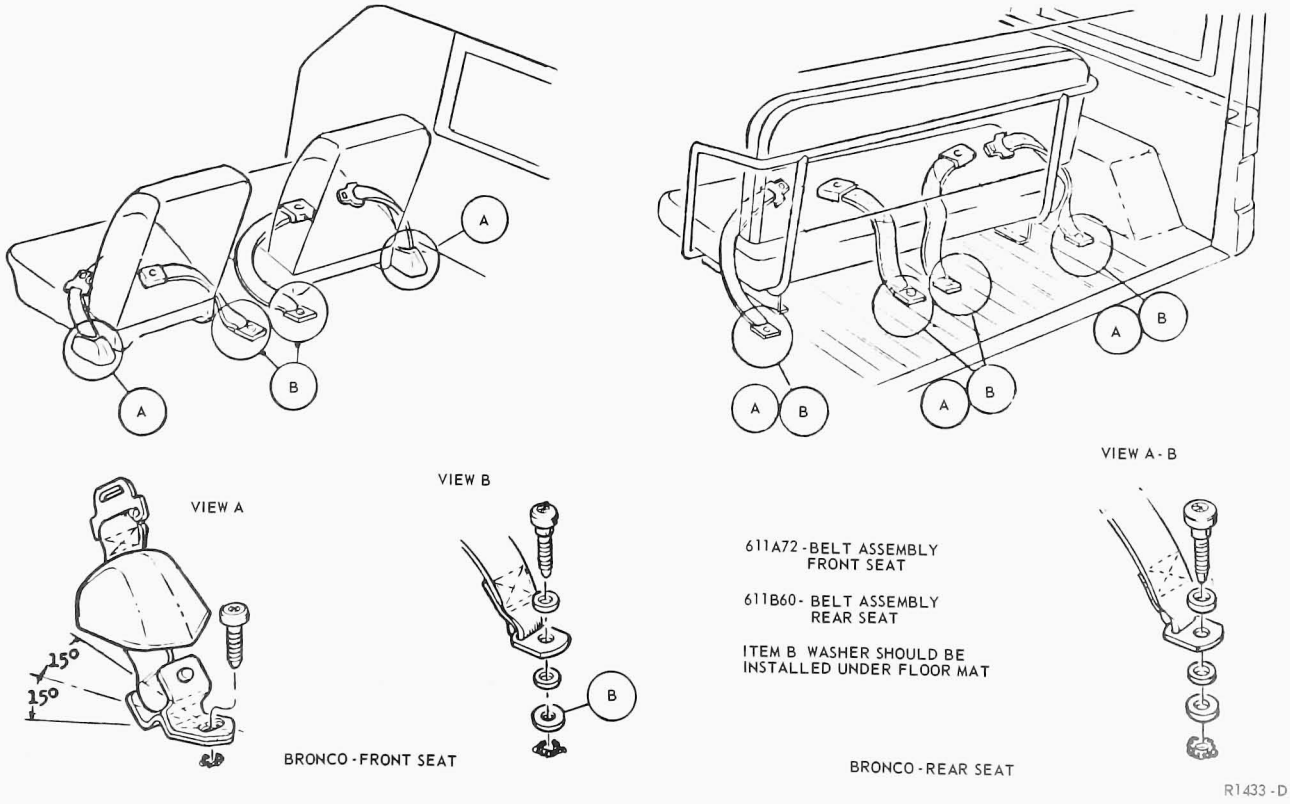

FIG. 1 Seat Belt Installation—Bronco

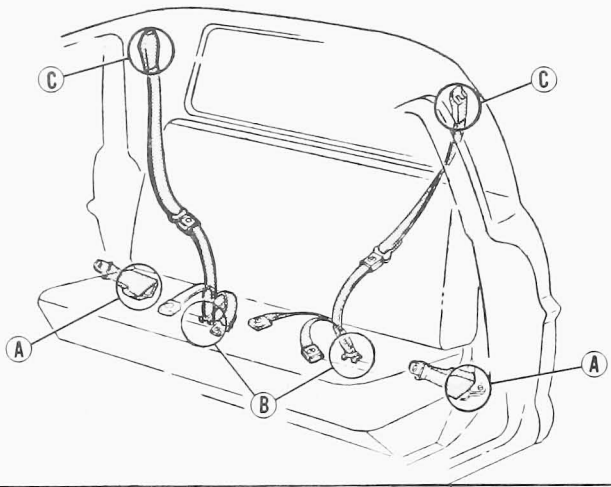

IN STOWAGE POSITION, SHOULDER STRAP (ITEM 1) IS FOLDED APPROXIMATELY IN HALF, TONGUE (ITEM "X") IS INSERTED INTO BOOT AND SECURED WITH ADHESION PADS (ITEM "Y"). SEE VIEW C.

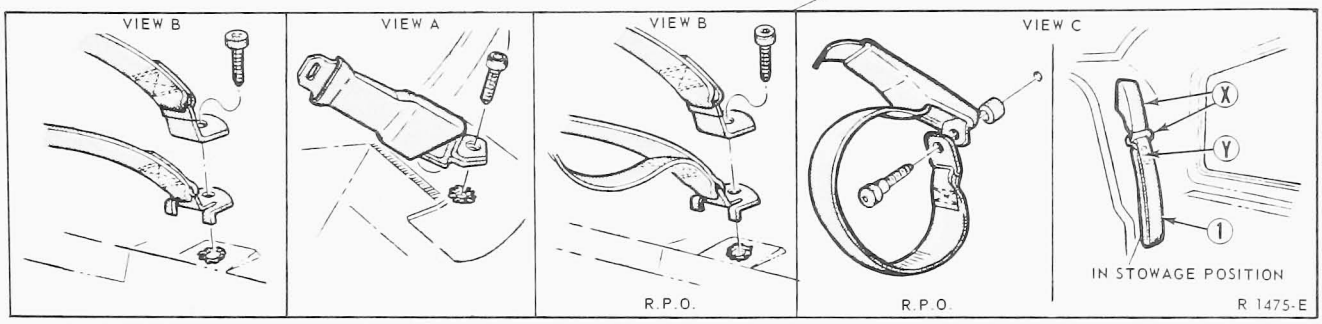

FIG. 2 Seat Belt Installation—Light Truck

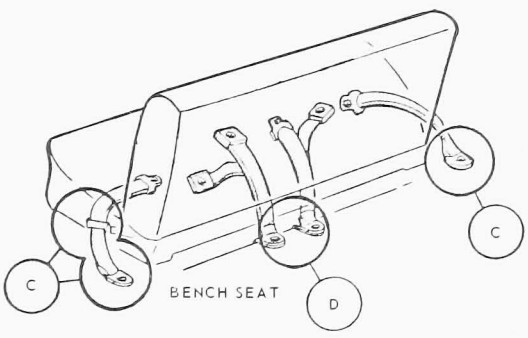

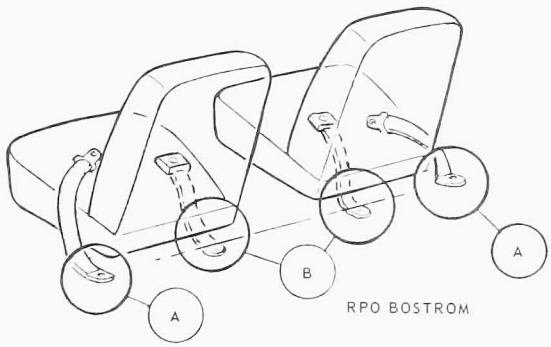

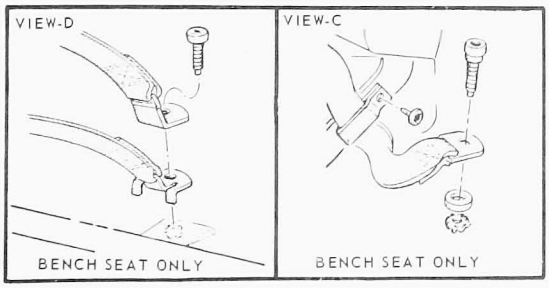

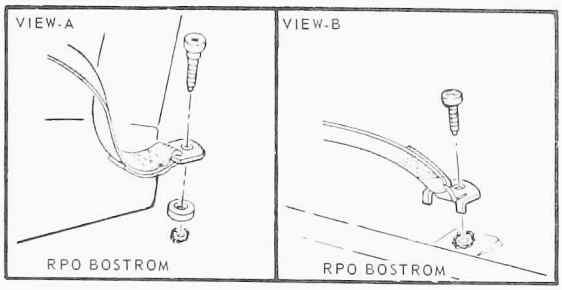

R1481-D

FIG. 3 Seat Belt Installation—Medium Truck

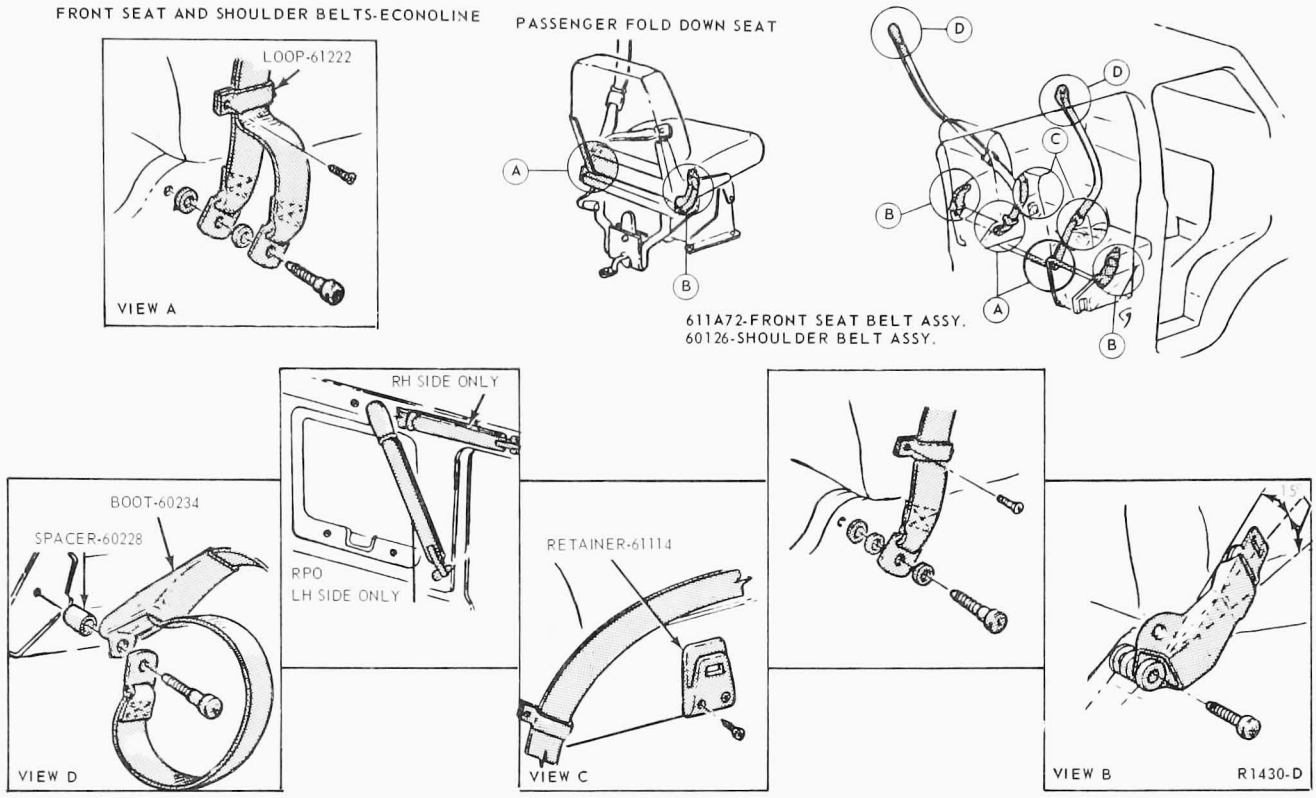

FIG. 4 Front Seat Belt Installation—Econoline

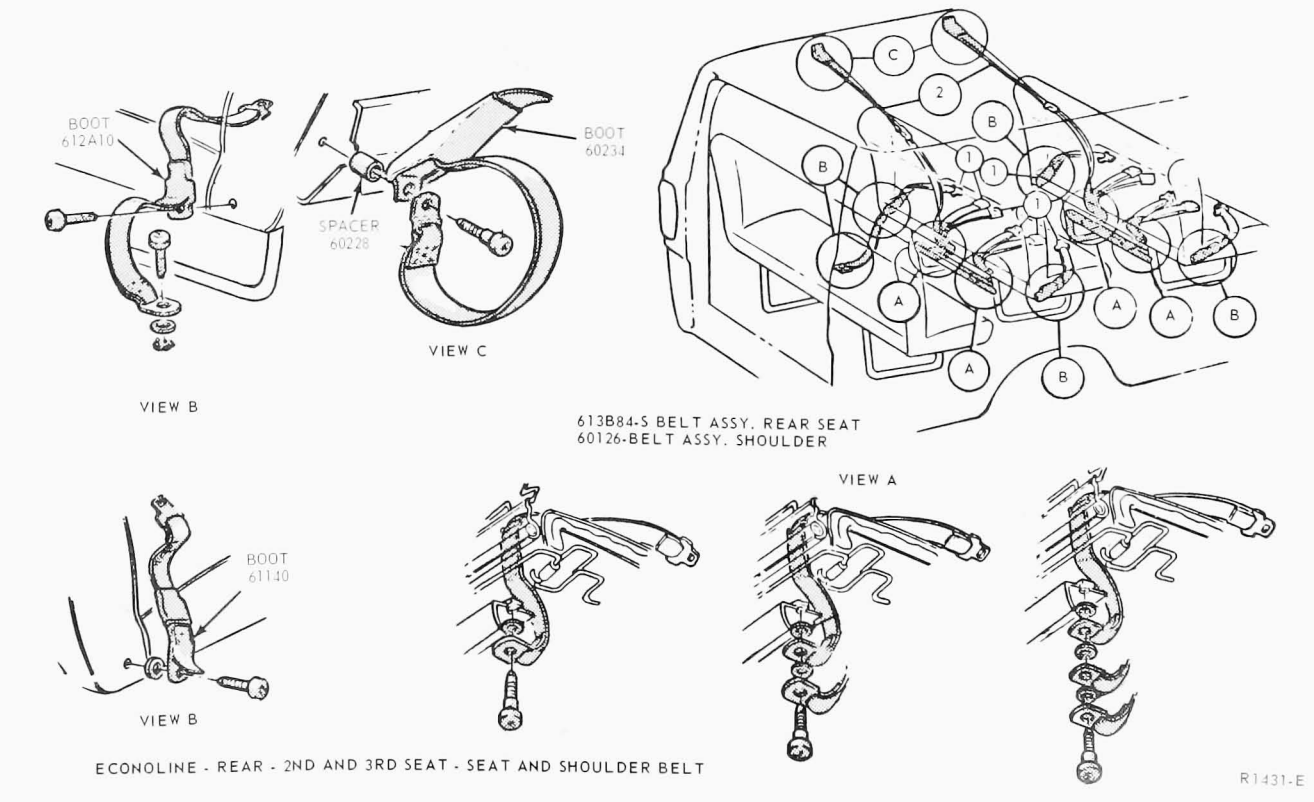

FIG. 5 2nd and 3rd Seat Belt Installation—Econoline

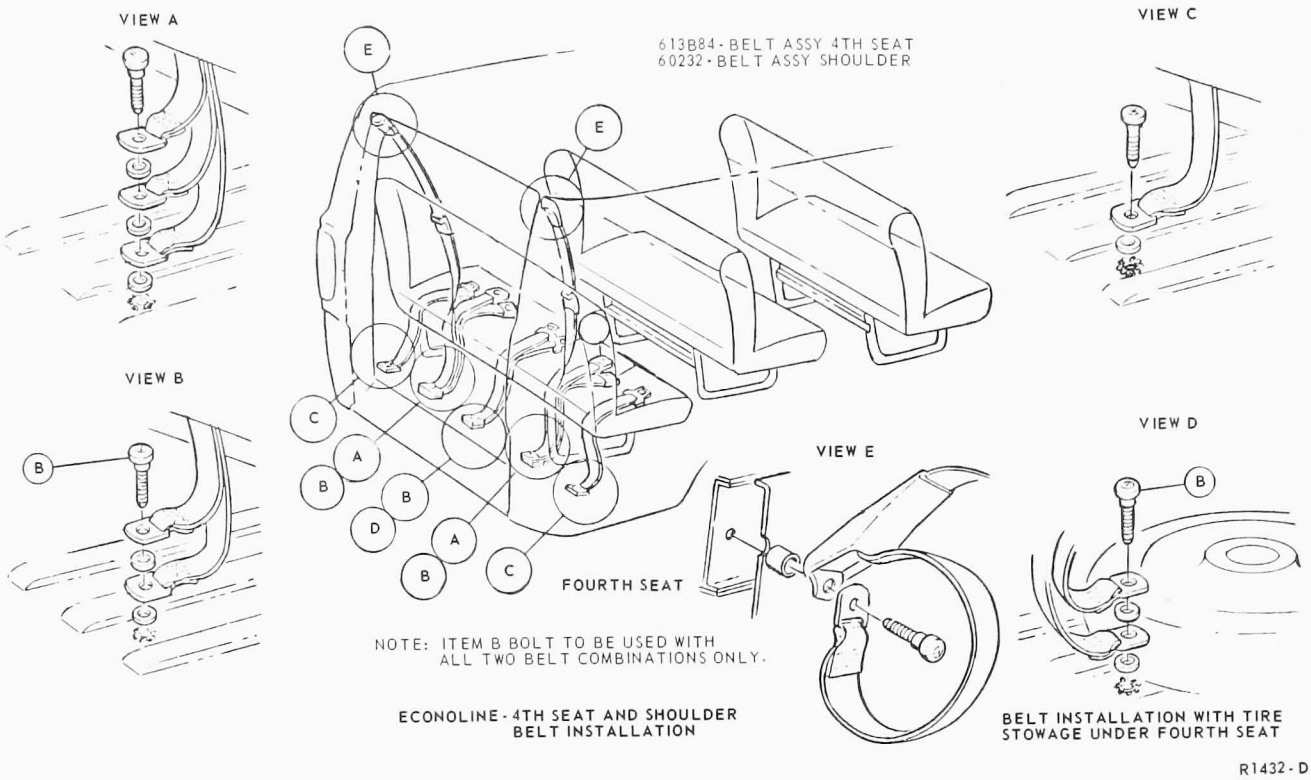

FIG. 6 4th Seat Belt Installation—Econoline

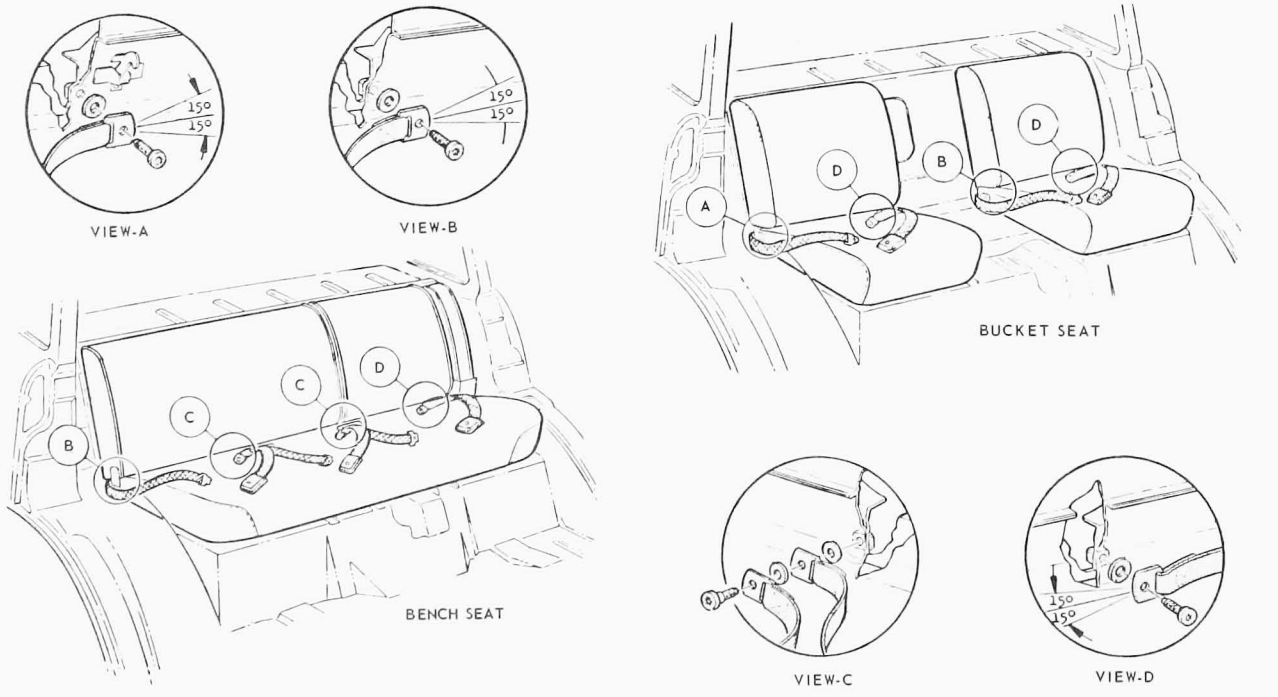

FIG. 7 Seat Belt Installation—Tilt Cab

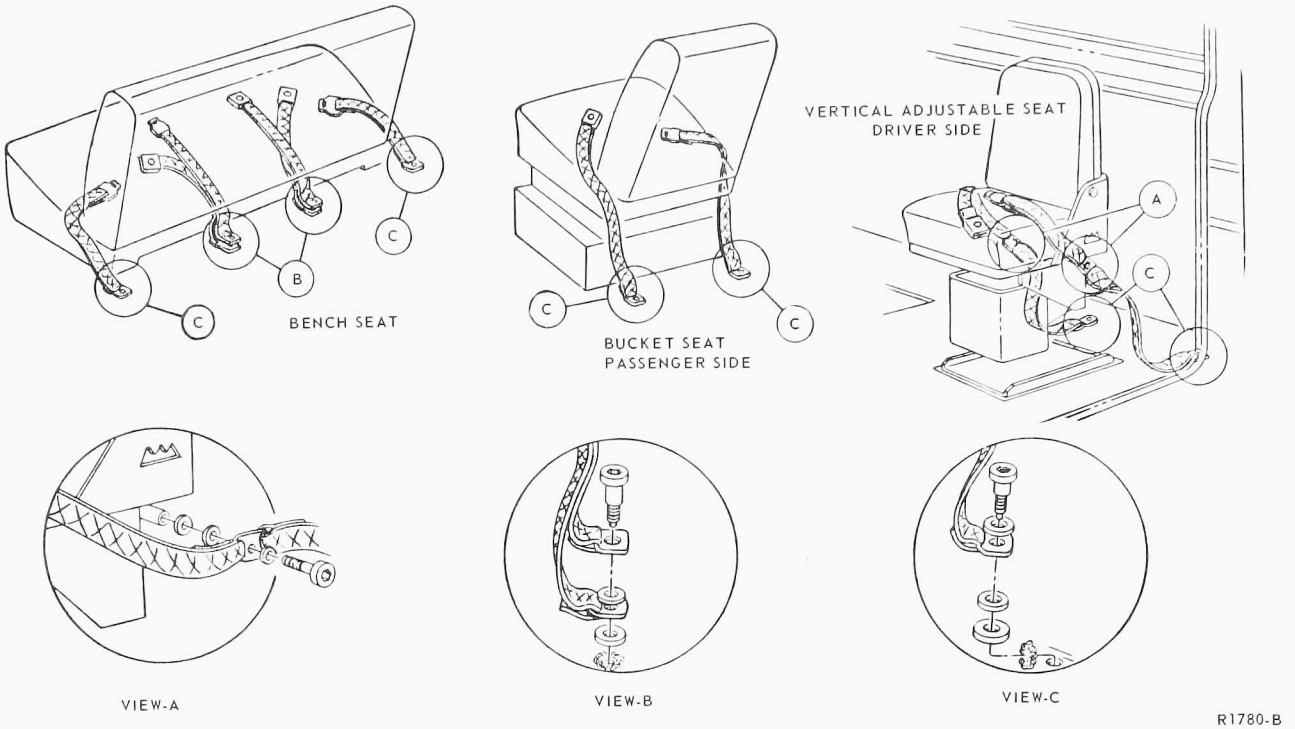

FIG. 8 Seat Belt Installation—Louisville Cab

REMOVAL AND INSTALLATION

SEAT AND SHOULDER BELTS

The seat belts and shoulder belts are factory installed in their proper locations. If the belts are removed for any reason, they should be installed as shown in Figs. 1 through 8, as shown on the illustration. Sealer should be placed around all seat belt anchor bolt holes in the floor pan. Tighten the anchor bolts to sepcification as shown at the end of this Part.

MAJOR REPAIR OPERATIONS

SEAT BELT WITH NO ANCHOR PLATE THREAD DAMAGE

1. Remove the damaged bolt from the anchor reinforcement and discard.
2. Install a new bolt with the same part number as indicated in the Specifications section and tighten to specification.

SEAT BELT WITH DAMAGED ANCHOR PLATE THREADS

1. Remove the broken or stripped bolt and discard.
2. Drill out the internal threads in the anchor plate with a 27/64 inch drill.
3. Re-thread the anchor plate with a 1/2-13 tap.
4. Blow out the chips.
5. Install the attachment parts in the sequence shown in Figs. 1 through 8, whichever is applicable. Tighten the replacement bolt to specification as shown in the Specifications section in this Part. Original parts are to be replaced with the repair parts indicated in the seat belt parts replacement charts, Specifications section. Unless specified in the chart, use original parts.

SHOULDER BELT WITH DAMAGED ANCHOR PLATE THREADS

1. Remove the broken or stripped bolt and discard.
2. Drill out the internal threads in the anchor plate with a 13/32 inch drill.
3. Blow out the chips.
4. Install the attachment parts in the sequence shown in Figs. 1 through 8,

whichever is applicable. Tighten the replacement bolt (7/16-32) to specification shown in the Specifications section in this Part.

Original parts are to be replaced with the repair parts indicated in the seat belt parts replacement charts, Specifications section. Unless specified in the chart, use original parts.

CLEANING

SEAT AND SHOULDER BELTS

The belt webbing can be cleaned with any mild soap solution recommended for cleaning upholstery or carpeting and following the instructions provided with soap. **Bleaching and redying of the belt webbing is not recommended because of deterioration which may be caused to the webbing.**

Inspect for loose, cut or damaged webbing.

SPECIFICATIONS

PARTS REPLACEMENT CHART – SEAT AND SHOULDER BELT WITH DAMAGED WELD NUT ANCHOR PLATE THREADS

ORIGINAL PARTS – SEAT BELT			REPLACEMENT PARTS		
④ Part No.	① Code Letter	Part Name	④ Part No.	① Code Letter	Part Name
382624-S100 ④	A	Bolt – 7/16-20 x 1.38 Pan Head Tapping	383531-S36 ④	X	Bolt – 1/2-13 x 1.38 Pan Locking
382627-S100 ④	B	Bolt – 7/16-20 x 1.75 Pan Head Tapping (.50 Shoulder)	383753-S36 ② ④	Y	Bolt – 1/2-13 x 1.75 Pan Locking (.50 Shoulder)
			383754-S36 ③ ④	Z	Bolt – 1/2-13 x 2.25 Pan Locking (.88 Shoulder)
D2AB-65612A16-AA	–	Spacer – Serrated 1/2 x .30	382553-S100	–	Washer – 9/16 Flat To Be Used With Repair of 382627-S100 Bolt Only When Required
382691-S100	H	Bolt – 7/16-20 x 1.75 Pan Head Tapping (.50 Shoulder)	383753-S100	Y	Bolt – 1/2-13 x 1.75 Pan Locking (.50 Shoulder)
382629-S100	–	Washer – .463/.443 I.D. Plate (1.80 Dia. – .190 Thick)	382552-S100	–	Washer – 1/2 Flat (1.30 Dia. – .190 Thick)
382582-S100	–	Washer – 1/2 Flat (.25 Thick)	382553-S100	–	Washer – 9/16 Flat (.25 Thick)
383608-S100 ④	B	Bolt – 7/16 x 20.88 Pan Head Tapping	383437-S36 ④	W	Bolt 1/2 x 13 Pan Locking

① Identification Letter on top of bolt head or face of spacer.
② Used for replacement on single anchorage (Retractor) attachment.
③ Used for replacement on multiple belt attachments.
④ Bolt Torque – 20-30 Ft-Lbs

ORIGINAL PARTS – SHOULDER BELT			REPLACEMENT PARTS		
② Part No.	① Code Letter	Part Name	② Part No.	① Code Letter	Part Name
382626-S100 ②	D	Bolt – 3/8-16 x 1.50 Pan Head Tapping	382627-S100 ②	B	Bolt – 7/16-20 x 1.75 Pan Head Tapping
C8AB-6260228-B	D	Spacer (0.30)	382582-S100	–	Spacer (0.25) – 1 Required
382626-S100 ②	D	Bolt – 3/8-16 x 1.50 Pan Head Tapping	382628-S100 ②	C	Bolt – 7/16-20 x 2.25 Pan Head Tapping
C8AB-6260228-A	C	Spacer (0.43)	382582-S100	–	Spacer (0.25) – 2 Required
			354959-S	–	Rubber Washer – 1 Required
382626-S100 ②	D	Bolt – 3/8-16 x 1.50 Pan Head Tapping	382628-S100 ②	C	Bolt – 7/16-20 x 2.25 Pan Head Tapping
C8SB-6560228-A	E	Spacer (0.60)	382582-S100	–	Spacer (0.25) – 2 Required
			354959-S	–	Rubber Washer – 1 Required
382625-S100 ②	E	Bolt – 3/8-16 x 2.00 Pan Head Tapping	382628-S100 ②	C	Bolt – 7/16-20 x 2.25 Pan Head Tapping
D22B-6260228-AA	F	Spacer (0.30)	382582-S100	–	Spacer (0.25) – 1 Required

① Identification letter on top of bolt head or face of spacer. ② Bolt Torque – 20-30 Ft.-Lbs.

PART 41-60 Seat Trim

GENERAL INFORMATION

SEAT TRIM

The following seat trim removal and installation procedures generally apply to all truck lines. If some of the steps do not apply to the particular vehicle being serviced, proceed to the next step and review the appropriate illustration shown.

Unless otherwise noted, the illustrations shown in this section are **typical of all bucket and bench seat assemblies.** See Figs. 1 through 6.

Seat trim replacement requires removal and installation of seat components such as seat assemblies, track assemblies and seat belts. Refer to the applicable part in Group 41 for these procedures.

REMOVAL AND INSTALLATION

SEAT CUSHION AND BACK COVER—BUCKET SEAT

BRONCO AND ECONOLINE

Repairs to seat cushions or seat backs are performed out of the vehicle and are usually limited to replacement of torn or burned seat covers. In a few instances, the pads may be damaged and require replacement.

When installing a new seat or back cover assembly, refer to Figs. 1 and 2 for the location of listing wires, hog rings, anti-squeak pads, and seat pad stack-up.

1. Remove the seat belt retainer loop (if so equipped), one screw. Remove the seat and track assembly if the cushion cover is to be replaced (Group 41).
2. Remove the seat tracks from the seat.
3. Remove the seat back assembly (Fig. 1) and the seat cushion stops.
4. Remove the hog rings retaining the seat cushion cover to the frame and remove the cover.
5. Remove the back cushion stops and the seat back release handle.
6. Remove the seat back panel assembly (retained with clips).
7. Remove the hog rings retaining the seat back cover to the frame and remove the cover.
8. Transfer the bolster wires to the cover listings.
9. Position the seat cushion cover to the seat and install the hog rings as shown in Figs. 1 and 2. Install the seat cushion stops.
10. Position the seat back assembly and install the hog rings (Figs. 1 and 2).
11. Install the seat back stops, release handle and rear seat back panel assembly. Then, install the seat back to the seat cushion assembly.
12. Install the seat tracks to the seat cushion and tighten to specification shown in Group 41, Specifications section.
13. Install the seat assembly into the vehicle. Tighten to specification shown in Group 41, Specifications section. Install the seat belt retainer loop (if so equipped), one screw.

SEAT CUSHION COVER—BENCH SEAT

F AND L-SERIES

1. Remove the seat and track assembly from the vehicle. (Group 41).
2. Remove the seat back assembly (Figs. 3, 4 and 5) from the seat cushion.
3. Cut the hog rings retaining the cushion cover to the frame assembly and remove the cover.
4. Transfer the listing wires from the old cover to the listings in the new cover.
5. Position the cover over the spring assembly and fasten the cover with hog rings.
6. Install the seat back to the seat cushion.
7. Install the seat and track assembly into the vehicle and tighten the attaching screws and washers shown in Group 41, Specifications section.

SEAT BACK COVER—BENCH SEAT

F AND L-SERIES

1. Remove the seat back-to-cushion mounting bolts and washers. Separate the back from the cushion and lift the seat back out of the vehicle.
2. Cut the hog rings attaching the cover to the seat back or cushion spring assembly (Figs. 3, 4 and 5) and remove the seat back cover.
3. If the padding is being replaced, cut the hog rings that attach the padding to the spring assembly and remove the padding.
4. Position the new pad to the seat back assembly and fasten it in place with hog rings.
5. Transfer the listing wires from the old cover to the listings in the new cover.
6. Position the new cover over the padding, pull the cover tight, and fasten the cover to the spring assembly with hog rings.
7. Install the seat back to the seat cushion assembly.

SEAT BACK—LEFT SIDE

C-SERIES

1. Remove the seat and track assembly from the cab.

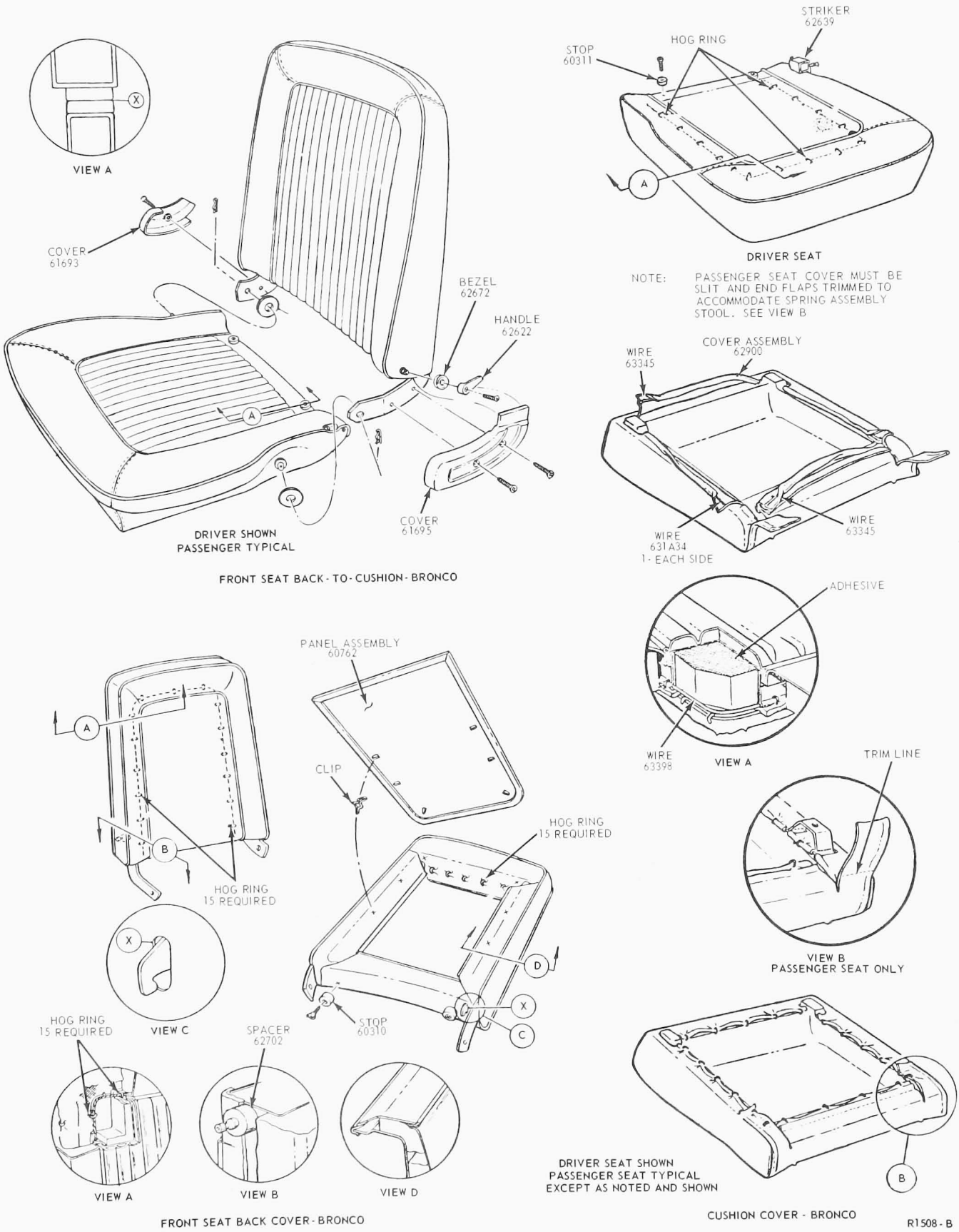

FIG. 1 Front Seat Cushion and Back Cover Installation— Bronco—Bucket Seat

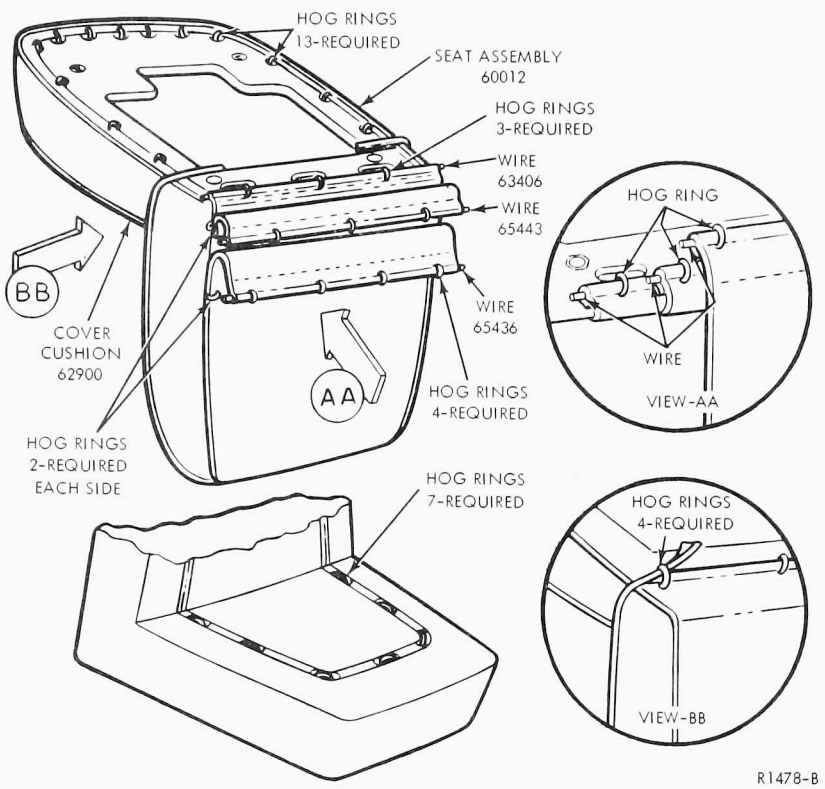

FIG. 2 Front Seat Cover Assemblies—Econoline

2. Remove the lock nut and washer from the seat back stop bolt (See Fig. 2, Part 41-01).
3. Remove the bolt and nut attaching the seat back frame to the side of the seat cushion.
4. Remove the screw and washer retaining the center hinge cover in place and position the cover out of the way.
5. Remove the seat back and remove the stop bolt and nuts from the seat back.
6. Install the stop bolt and nuts on the seat back.
7. Position the seat back to the seat cushion, and install the seat back frame-to-cushion attaching bolt and nut (See Fig. 2, Part 41-01).
8. Position the seat track to the floor pan, install the retaining nuts and washers, and tighten to specification shown in Group 41, Specifications section.
9. Position the seat back stop in the cushion bracket and install the washer and lock nut. Then, adjust the seat back for the desired angle.
10. Locate the center hinge cover in position and install the washer and retaining screw.

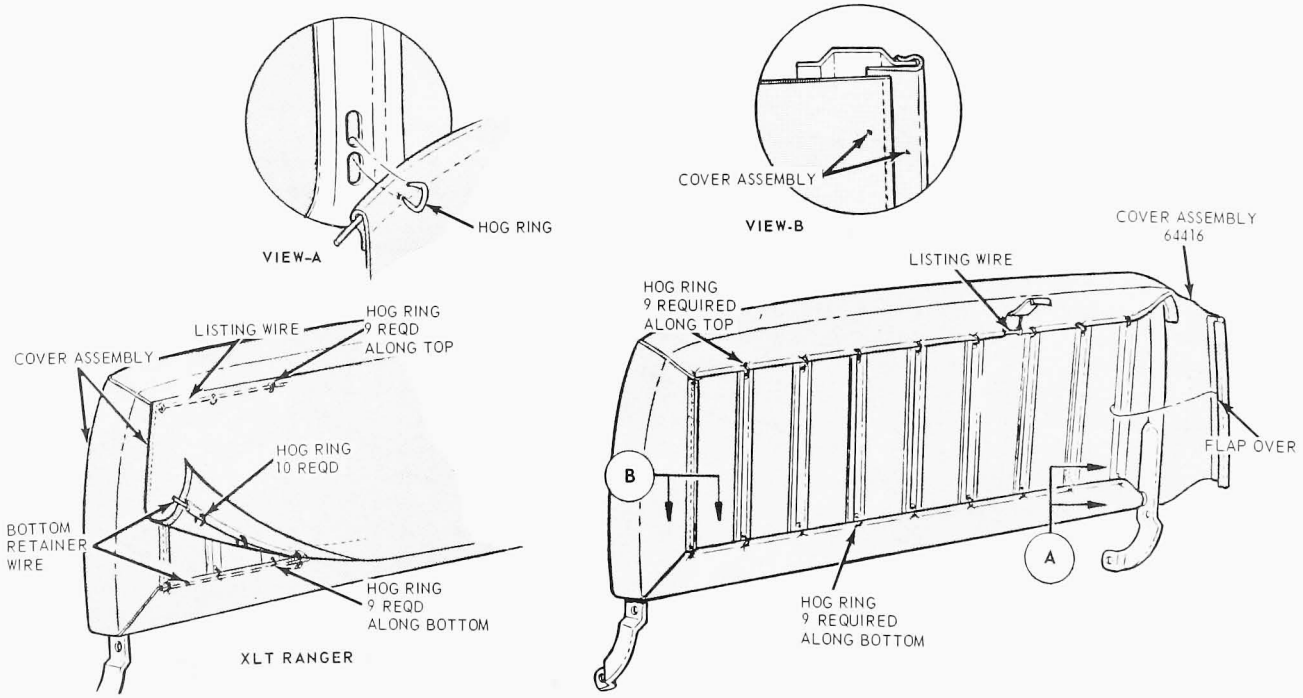

FIG. 3 Seat Back Cover Installation—Typical

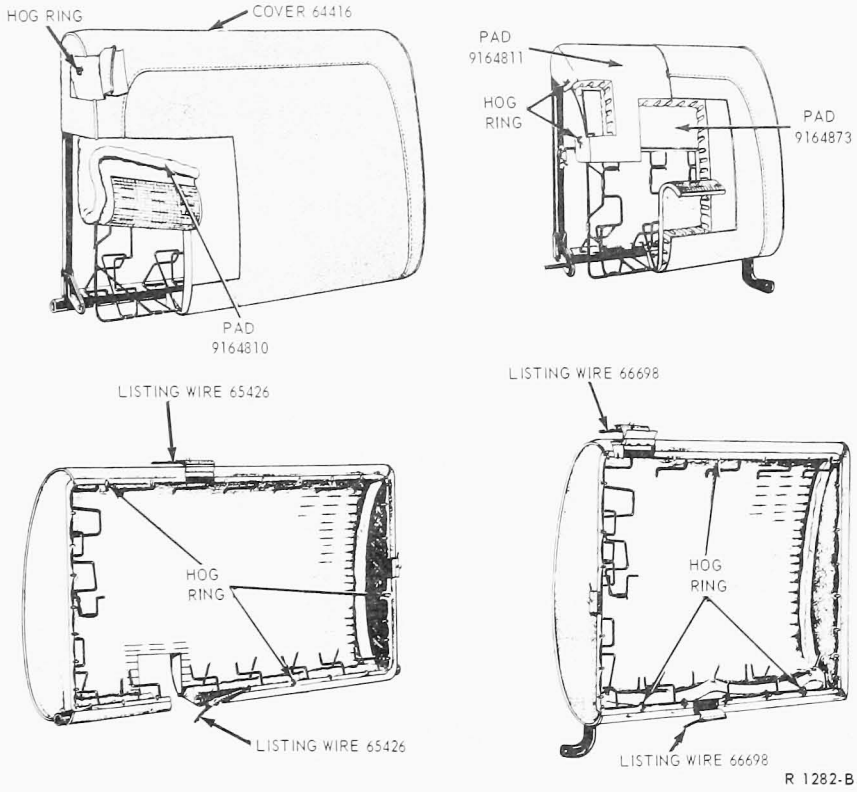

FIG. 4 Seat Back Cover Installation—C-Series

SEAT BACK—RIGHT SIDE

C-SERIES

1. Remove the left seat back from the seat frame as outlined in the foregoing procedure.
2. Remove the right seat back panel attaching screws and remove the panel from the seat back (See Fig. 2, Part 41-01).
3. Remove the pin and washer from the right side pivot. Slide the right seat back toward the left side of the seat and remove it from the seat cushion.
4. Remove the seat back stop scuff plate from the lower edge of the seat back.
5. Install the seat back stop scuff plate on the lower edge of the seat back.
6. Position the right seat back to the seat frame and install the left seat back. Install the washer and pin at the right side pivot.
7. Position the right seat back panel on the seat back and install the attaching screws.
8. Lock the right seat back in place.
9. Install the left seat back as outlined in the foregoing procedure.

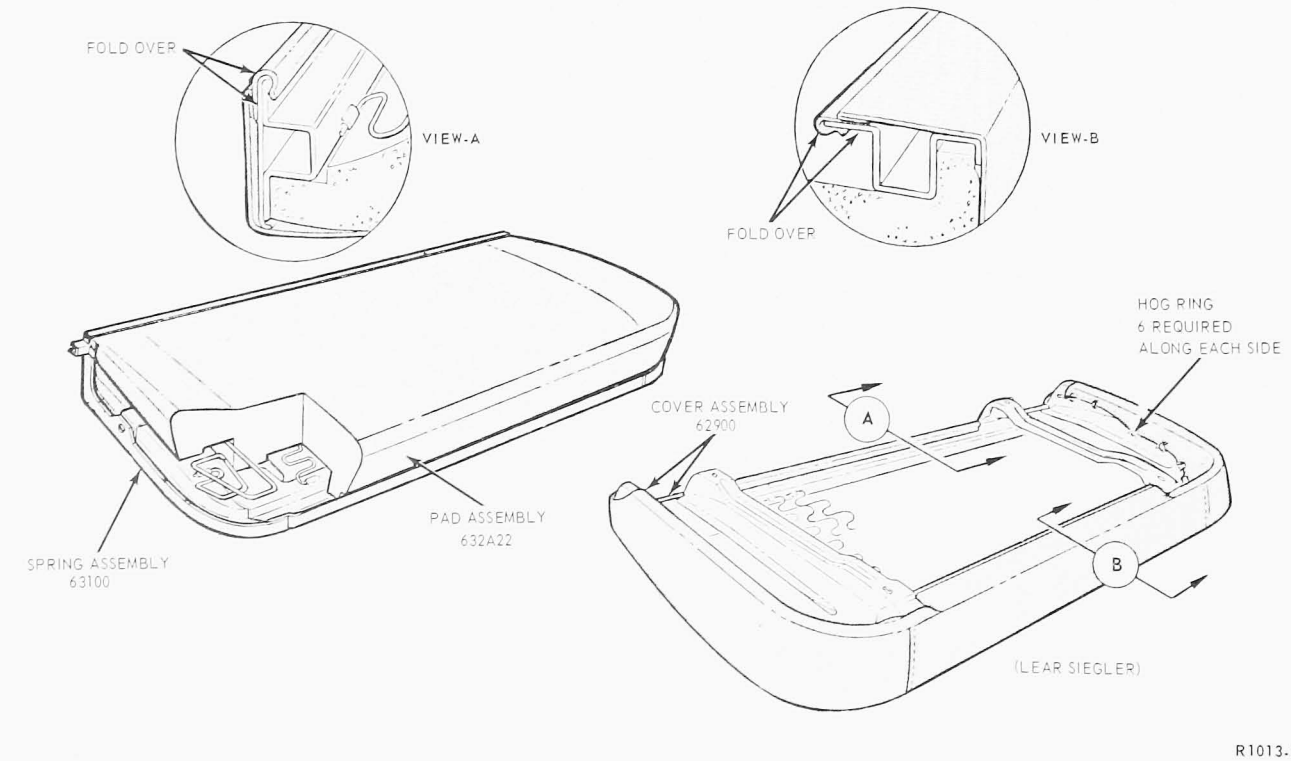

FIG. 5 Seat Cushion Cover Installation—Typical

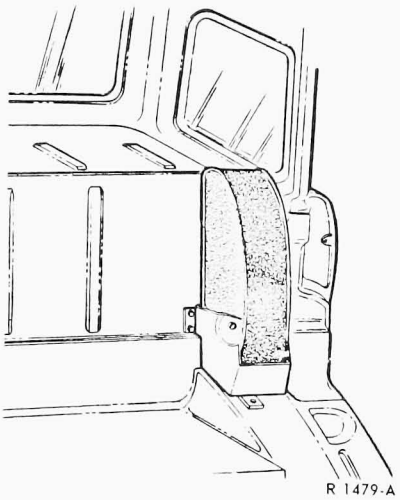

FIG. 6 Arm Rest Installation—C-Series

ARM REST—C-SERIES

To remove the arm rest from the cab, remove the five retaining bolts (Fig. 6).

Position the arm rest assembly to the floor pan and cab back. Install the five retaining bolts.

PART 41-70 Bostrom Viking Seat

COMPONENT INDEX Applies To Models As Indicated	MODEL APPLICATION L-Series	 W-Series
ADJUSTMENTS		
Seat Back	70-01	70-01
Seat Level	70-01	70-01
REMOVAL AND INSTALLATION		
Seat Back	70-02	70-02
Seat Cushion	70-02	70-02
Seat and/or Seat Track	70-02	70-02
Shock Absorber	70-03	70-03
Torsion Bar	70-02	70-02

A page number indicates that the item is for the vehicle(s) listed at the head of the column.
N/A indicates that the item is not applicable to the vehicle(s) listed.

ADJUSTMENTS

SEAT BACK

The angle of the seat back can be adjusted to any of three positions. To adjust the seat back angle, lift the seat back up and slide it to the desired position.

SEAT LEVEL

The seat level weight adjustment is controlled by the adjuster lever located at the right rear corner of the seat cushion (Fig. 1). The adjuster lever increases with (clockwise rotation) or decreases with (counterclockwise rotation) the twist applied to the torsion bar to control the up and down travel of the seat and prevent it from reaching the end of its travel.

The seat is properly adjusted for weight when the indicator tip (located on the inside edge of the left seat back support) is flush with the front edge of the support. This adjustment must be made when the seat is occupied.

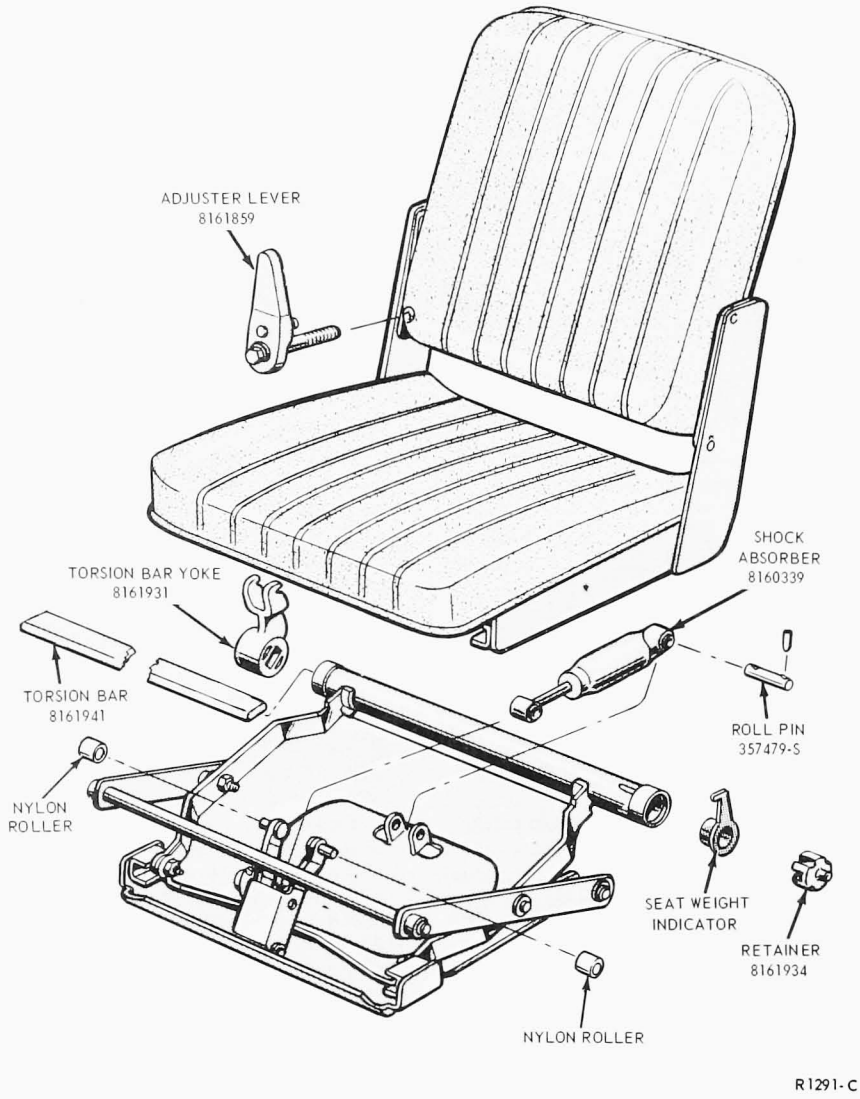

FIG. 1 Bostrom Viking Seat—Disassembled

REMOVAL AND INSTALLATION

SEAT AND/OR SEAT TRACK

1. Remove four nuts and washers attaching the seat track to the floor pan and remove the seat and seat track.
2. Remove 4 nuts and washers attaching the seat tracks to the seat mechanism and remove the tracks from the seat.
3. Position the seat tracks to the seat and install the nuts and washers; then, position the seat and seat track in the vehicle, install the retaining washers and nuts and torque 12-25

SEAT CUSHION

1. Remove the pre-load on the torsion bar by rotating the adjuster lever counterclockwise until the tension is relieved. It is not necessary to remove the adjuster lever from the seat.
2. Remove four nuts and washers retaining the seat cushion to the seat frame.
3. Slide the cushion forward to disengage the bearings from the slides on the bottom of the seat cushion and remove the cushion.
4. Slide the bearings into the slides on the bottom of the cushion and push the cushion rearward into position. Then, install the retaining nuts and washers.

SEAT BACK

Remove the seat back by removing four screws and washers from the rear of the seat back.

TORSION BAR

1. Remove four nuts and washers attaching the seat mechanism to the

seat tracks and remove the seat from the vehicle.
2. Wedge the seat in the up position by placing a wooden block between the lower seat mechanism frame and the rod under the front edge of the seat cushion (Fig. 1).
3. Remove the pre-load on the torsion bar by rotating the adjuster lever counterclockwise and remove it from the seat.
4. Remove four screws and washers and remove the seat back from the seat frame.
5. Remove the four seat cushion retaining nuts and washers; slide the seat cushion forward and remove it from the seat track mechanism.
6. Remove the right side panel from the seat frame by tapping it lightly with a wooden mallet.
7. Remove the torsion bar.
8. Position the torsion bar inside the seat mechanism tube and engage the bar with the slot in the retainer (Fig. 1).
9. Position the right seat frame side and yoke to the seat frame. Engage the yoke with the torsion bar and assemble the seat frame so that the cushion attaching studs are in line with the seat frame holes.
10. Install the seat cushion and seat back on the frame.
11. Install the adjuster lever and engage the adjuster pin in the hooks on the torsion bar yoke (Fig. 2).
12. Apply pre-load to the torsion bar by rotating the adjuster lever clockwise and remove the block from under the front of the seat. Then install the seat in the vehicle.

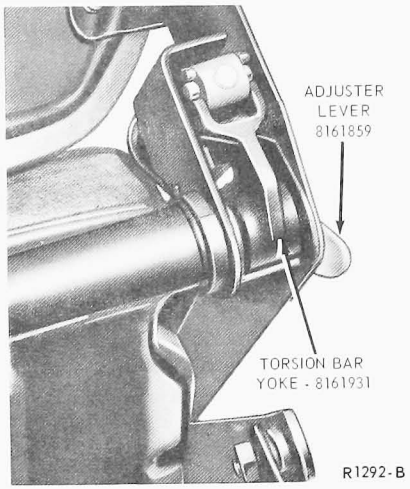

FIG. 2 Bostrom Seat Adjuster Lever—Installed

SHOCK ABSORBER

1. Wedge the seat in the up position by placing a wooden block between the lower seat mechanism frame and the rod under the front edge of the seat cushion (Fig. 1).
2. Remove the pre-load on the torsion bar by rotating the adjuster lever counterclockwise until the tension is relieved. It is not necessary to remove the adjuster lever from the seat.
3. Remove the seat cushion retaining nuts and washers; slide the seat cushion forward and remove it from the seat track mechanism.
4. Wire the side panel assemblies across the front of the seat to retain their position.
5. Remove the snap rings from the shock absorber front pivot shaft. With a drift, remove the pivot shaft, driving from the side opposite the serrations on the shaft.
6. With a small diameter punch or drift, remove the two roll pins from the shock absorber rear pivot shaft.
7. Remove the pivot shaft with a punch or drift and remove the shock absorber.
8. Position the shock absorber base to the rear attachment and install the pivot shaft. Then, install the roll pins in the shaft.
9. Position the shock absorber shaft to the front attachment. Install the pivot shaft with the serrations on the right side of the seat. Then, install the snap rings on the pivot shaft.
10. Remove the wood brace from the seat frame and install the seat cushion on the seat mechanism. Be sure that the bearings engage with the bottom of the seat cushion.
11. Remove the wooden block from under the front edge of the seat and adjust the torsion bar pre-load by rotating the adjuster lever clockwise.

PART 41-71 Bostrom Westcoaster Seat

COMPONENT INDEX Applies To Models As Indicated	MODEL APPLICATION L-Series	 W-Series
ADJUSTMENTS	71-01	71-01
REMOVAL AND INSTALLATION	71-02	71-02

A page number indicates that the item is for the vehicle(s) listed at the head of the column.
N/A indicates that the item is not applicable to the vehicle(s) listed.

ADJUSTMENTS

The seat weight adjustment handle is located at the front of the pedestal support beneath the seat cushion. The handle adjusts the softness of the ride and is adjusted according to the driver's weight.

The seat back angle can be set at one of three different positions for maximum comfort. The seat back angle control is located at the left of the seat back at the lower outside edge.

Seat height may be adjusted by turning the oval-shaped control at the left side of the seat support pedestal.

Horizontal or forward and rearward seat adjustment is controlled by the handle located at the lower left side of the seat cushion (Fig. 1).

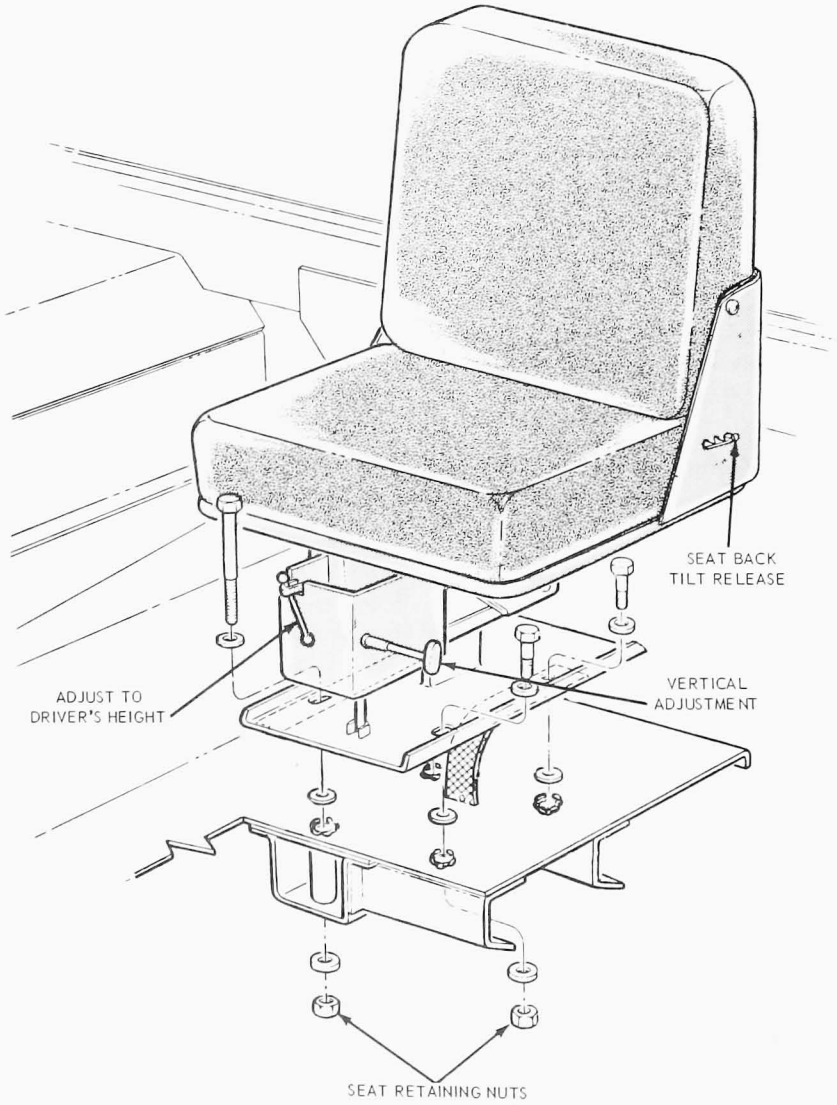

FIG. 1 Bostrom Westcoaster—L-W-Series

REMOVAL AND INSTALLATION

SEAT ASSEMBLY

Remove the four nut and washers retaining the seat assembly from the floor pan (Fig. 1). Discard all four washers between the seat pedestal and the floor pan, (if so equipped). Remove the seat assembly from the vehicle.

Position the seat in the vehicle install the four retaining nuts and washers and torque 12-20 Ft-LB.

TORSION SPRING

Removal

1. Remove the seat assembly from the cab.
2. Before starting disassembly, turn the height adjustment lever clockwise until the seat is at its highest position.
3. Remove the shock absorber.
4. Remove the roll pins from the rear hinge pins; drive the hinge pins from the same end from which the roll pins were removed (the opposite end of the hinge pin is serrated). The upper seat structure is now free and can be removed.
5. Drive out the roll pin in the end of the adjuster stud. Unscrew the adjuster stud from the adjuster pin and remove the entire adjusting screw assembly.
6. Remove the front upper and lower hinge pins. The spring support bracket can now be swung down out of the way, freeing the upper and lower arm assemblies.
7. Remove the lower arm assembly and torsion spring. Take the adjuster pin off the torsion spring.
8. Replace the torsion spring. Check all flanged bearings and replace them if necessary.

Installation

1. Replace the adjuster pin in the torsion spring. Seat the bushing in the spring and install the lower arm assembly. Be sure that the bearings are in place. (The adjuster pin flange on the spring must be to the rear).
2. Raise the spring support bracket and slide the lower arm assembly and lower pivot arm (with the bearing in place) into it. Be sure that the adjuster pin is on top of the lower pivot arm. Secure these units by installing the support pin and the roll pin.
3. Place a 2 x 4 inch block of wood approximately 5 inches long under the support rod of the lower arm assembly to hold it in a raised position. This raises the adjuster pin to permit reassembling the stud.
4. Using a screwdriver or flat bar, raise the spring so that the stud can be screwed back into the adjuster pin and secure it with the roll pin.
5. Replace the upper arm and bearings in the seat adjuster and bracket assembly with the upper pin. Replace the roll pin.
6. Assemble the upper seat structure to the lower arm assembly (with bearings in place) by replacing the lower pin. Insert the roll pin.
7. Align the holes in the upper arm, the pivot arm and the spring support bracket and replace the support pin and the roll pin.
8. Connect the shock absorber and check the operation of the seat adjusting mechanisms.

PART 41-73 Unison No. 675 Roadrunner Seat

COMPONENT INDEX Applies To Models As Indicated	MODEL APPLICATION L-Series	 W-Series
ADJUSTMENTS	73-01	73-01
REMOVAL AND INSTALLATION	73-02	73-02

A page number indicates that the item is for the vehicle(s) listed at the head of the column.
N/A indicates that the item is not applicable to the vehicle(s) listed.

ADJUSTMENTS

Refer to Figure 1 for call-outs refering to back, seat height and weight adjustments. The horizontal, or forward and rearward seat track control lever is also shown.

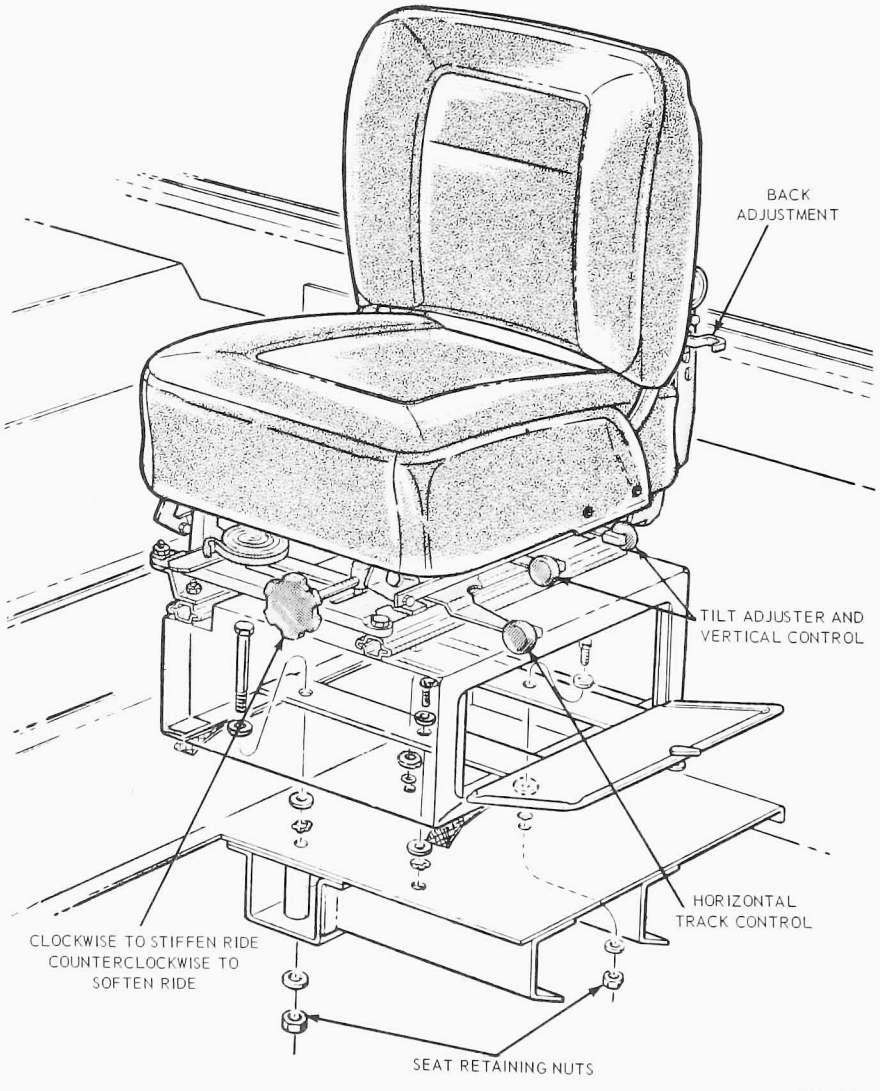

FIG. 1 Installation Unison No. 675 Roadrunner Seat— Typical Unison No. 675

REMOVAL AND INSTALLATION

SEAT AND/OR SEAT TRACK

Remove the four nuts and washers attaching the seat pedestal to the seat track (Fig. 1). Remove the seat assembly from the vehicle. Remove the four nuts attaching the seat track to the pedestal and remove the seat tracks.

Position the seat tracks to the seat assembly and fasten the retaining nuts (Fig. 1). Position the seat assembly to the pedestal and install the retaining nuts and torque 12-20 ft-lb.

PART 41-74 Cush-N-Aire Seat

COMPONENT INDEX Applies To Models As Indicated	MODEL APPLICATION W-Series
DESCRIPTION AND OPERATION	74-01
ADJUSTMENTS	74-01
REMOVAL AND INSTALLATION	74-02

A page number indicates that the item is for the vehicle(s) listed at the head of the column.
N/A indicates that the item is not applicable to the vehicle(s) listed.

DESCRIPTION AND OPERATION

This seat provides five adjustments to accommodate the size, weight and proportions of the driver. The adjustments described here are illustrated in Figure 1.

1. **FRONT SEAT BACK ANGLE—Four tilting angle positions (3 inches of adjustment)—** Push on the seat back adjusting handle, lean back to the desired position and release the handle.
2. **CUSHION REAR TILT—Four height positions (2 inches of adjustment)—** Rotate the cushion rear adjusting handle clockwise to raise, or counterclockwise to lower the rear part of the cushion.
3. **CUSHION POINT TILT—Three height positions (1 inch of adjustment for upward tilt, 2 inches of adjustment for downward tilt)—** Lift up on the cushion lift handle and pull up and forward to the desired position.
4. **SEAT TRACK—Nine forward and backward positions (4 inches of adjustment)—** Move the seat track adjusting lever toward the front of the seat, slide the seat forward or backward to the desired position, and release the lever.
5. **SEAT HEIGHT—(Six inches of adjustment)—** To raise the seat (inflate), push in the air control valve button. To lower the seat (deflate), pull out the air control valve button.

ADJUSTMENTS

Refer to figs. 1 and 2 for seat back angle and height and weight adjustments.

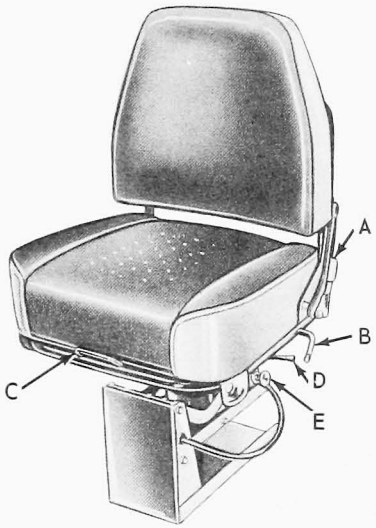

A FOUR BACK ANGLE TILTING POSITIONS–PUSH ON HANDLE, LEAN BACK.
B FOUR AFT CUSHION HEIGHT POSITIONS–ROTATE HANDLE CLOCKWISE.
C THREE FRONT CUSHION HEIGHT POSITIONS AND CUSHION DEPTH ADJUSTMENTS–LIFT ON HANDLE, PULL UP AND FORWARD.
D NINE FORE AND AFT POSITIONS–PULL LEVER TOWARD FRONT AND SLIDE.
E PUSH AIR BUTTON TO INFLATE–PULL AIR BUTTON TO DEFLATE FOR UP AND DOWN MOVEMENT.

R1510-A

FIG. 1 Cush-N-Aire Seat—Adjustments

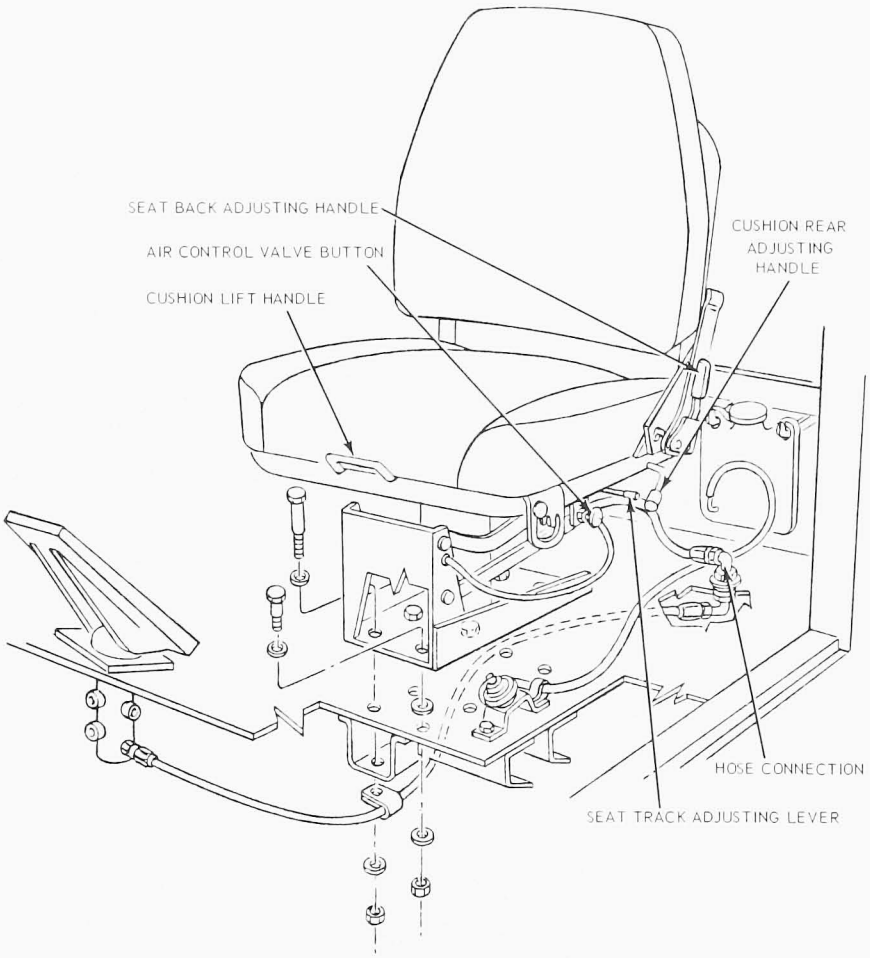

R1487-A

FIG. 2 Cush-N-Aire Seat—Exploded

REMOVAL AND INSTALLATION

To remove the seat assembly, remove the four seat track to seat track support retaining nuts. Disconnect the air hose and remove the seat from the support. If the seat support assembly is to be removed, remove the retaining nuts and washers from underneath the floor pan.

When installing, tighten the seat support assembly-to-floor pan nuts 12-20 ft-lbs and the seat track-to-seat track support nuts to 7-12 ft-lbs.

Window Glass and Mechanisms

GROUP 42

	Page
PART 42-01	
Window Glass and Mechanisms General Service	42-01-01
PART 42-04	
Dual U-Run Front Door Window Mechanism	42-04-01
PART 42-15	
Vent Window Mechanism	42-15-01
PART 42-25	
Pivot Type Rear Door and Side Window	42-25-01

PART 42-01 Window Glass and Mechanisms General Service

GENERAL INFORMATION

WINDOW MECHANISM LUBRICATION

The door window mechanism should be properly lubricated to provide ease of operation. The window glass mechanism should be lubricated whenever the glass channel or window regulator is removed or excessive effort is required to operate the windows. To lubricate a door window mechanism, apply an even coating of Polyethylene grease (C4AZ-19584-A) to the window regulator rollers, shafts and the entire length of the roller guides as illustrated by the shaded areas in Fig. 1.

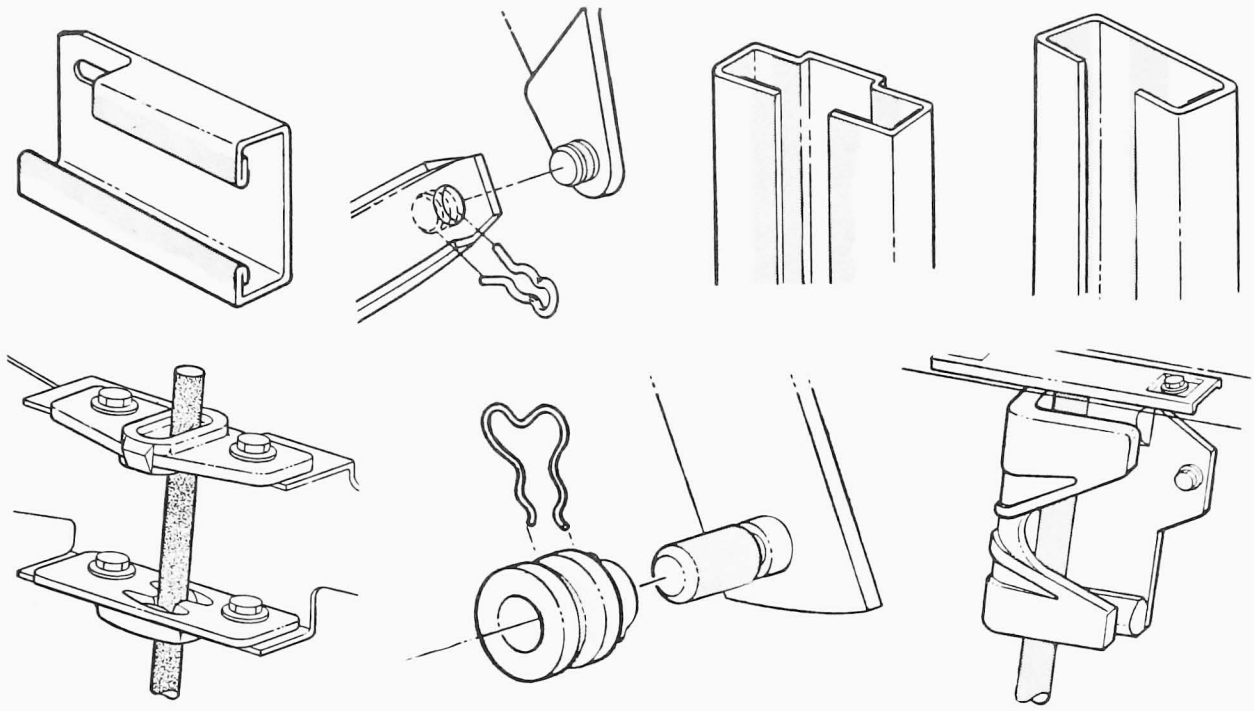

APPLY AN EVEN COATING OF POLYETHYLENE GREASE (C4AZ-19584-A) TO ALL WINDOW REGULATOR ROLLERS, SHAFTS AND THE ENTIRE LENGTH OF ROLLER GUIDES AS ILLUSTRATED BY THE SHADED AREAS.

N1607-B

FIG. 1 Window Mechanism Lubrication

PART 42-04 Front Door Window Glass and Mechanisms

COMPONENT INDEX Applies to Models as Indicated	MODEL APPLICATION							
	All Models	Bronco	Econoline	F-Series	L-Series	C-Series	W-Series	B-Series
ADJUSTMENTS		04-01	04-01	04-02				
REMOVAL AND INSTALLATION								
Glass – Door		04-03	04-02	04-03	04-03	04-04	04-04	
Regulator – Window		04-05	04-05	04-06	04-06	04-06	04-07	
Run – Glass Rear		04-07						
Weatherstrip – Belt			04-07					

A page number indicates that the item is for the vehicle(s) listed at the head of the column.

ADJUSTMENTS

WINDOW MECHANISM ADJUSTMENT

ECONOLINE

1. Remove the trim panel from the door, if so equipped.
2. Remove the access cover from the door.
3. Loosen the front run retainer and division bar lower attaching screw and the rear run retainer lower attaching screw (Items C and D, Fig. 1).
4. Lower the window glass until the top edge of the glass is approximately four inches above the belt line (Fig. 1).
5. Tighten the screws (Items C and D) and check the operation of the window mechanism.
6. Install the access cover and, if so equipped, the trim panel on the door.

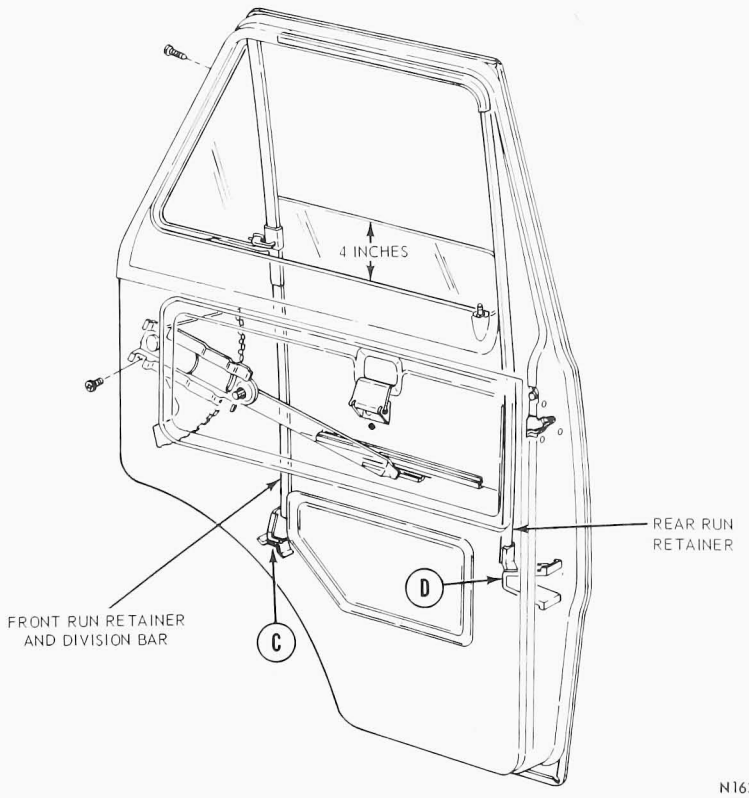

FIG. 1 Front Door Window Glass Adjustment—Econoline

BRONCO

1. Lower the window glass until the top edge of the glass is flush with the bottom of the window opening. Then, position the lower stop bracket bumper against the glass channel (Fig. 2) and tighten the attaching screw.
2. Loosen the rear run and bracket lower attaching screw.
3. Raise the window until the top edge of the glass is approximately four inches above the bottom of the window opening. Allow the rear run and bracket to move as necessary for proper alignment with the window glass. Then, tighten the rear run and bracket lower attaching screw.
4. Lower the glass and loosen the division bar lower run and bracket attaching screw (Fig. 2). Position the division bar lower run against the glass and tighten the attaching screw.

DOOR WINDOW ADJUSTMENT

F-SERIES

The door trim panel and watershield must be removed to adjust the window mechanism.

1. Loosen the nut and washer at the lower end of the vent window division bar (Fig. 3) so that the lower end of the division bar is free to move inboard or outboard.
2. Loosen the rear run two lower attaching screws (Fig. 1).
3. Lower the glass 1/3 of the way

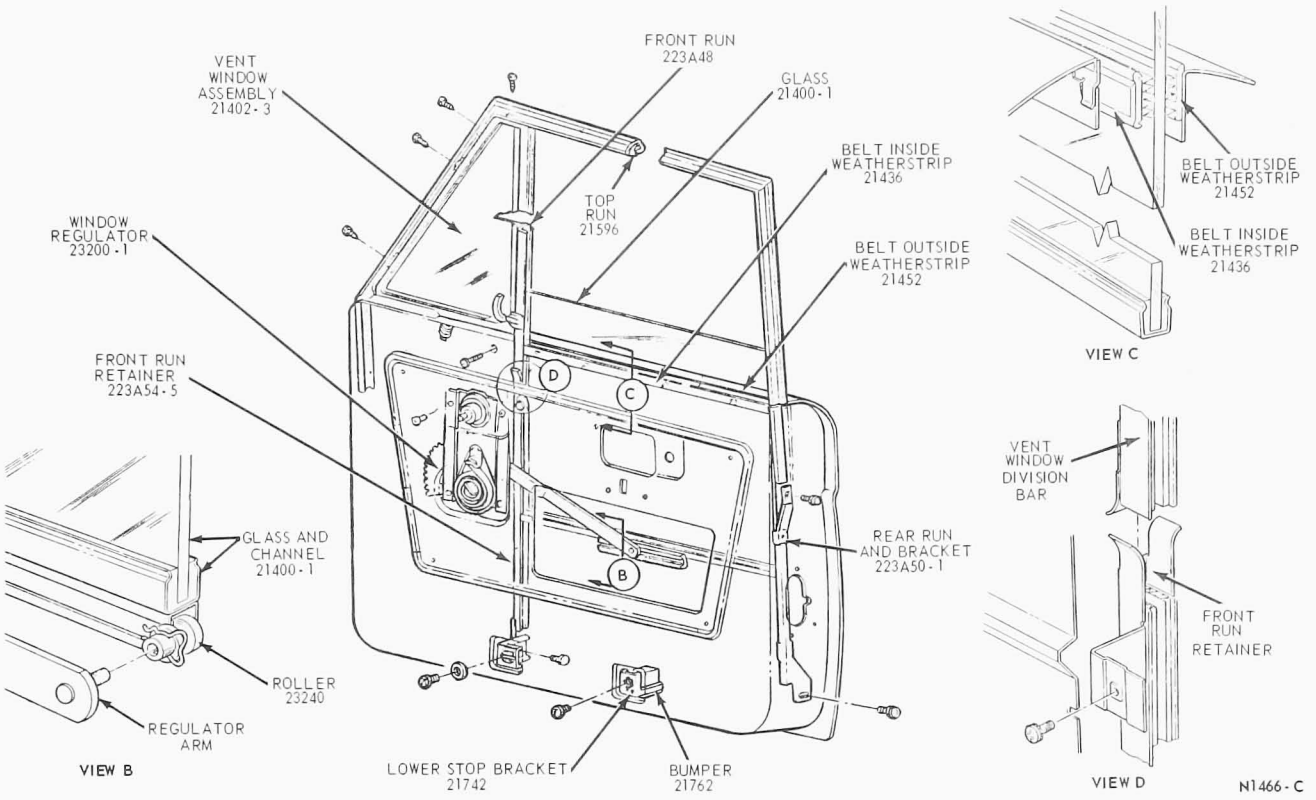

FIG. 2 Door Window Mechanism—Bronco

down. Adjust the stud at the lower end of the division bar in or out until the washer on the stud just comes against the door inner panel. Then, tighten the nut and washer assembly (Fig. 3).

4. Tighten the rear run lower two attaching screws.
5. Lower the glass and check the height of the top edge of the glass. It should be about flush with the belt line. If adjustment is necessary, loosen the regulator attaching screws and rotate the regulator down and forward to lower the glass, or up and rearward to raise the glass. Then, tighten the regulator attaching screws when the correct height is obtained.

REMOVAL AND INSTALLATION

ECONOLINE

Removal

FRONT DOOR GLASS

1. Remove the access cover from the door inner panel.
2. Remove three screws attaching the vent window assembly to the upper leading edge of the door (Fig. 4).
3. Remove one screw attaching the vent window assembly to the door at the belt line (Fig. 4).
4. Remove one screw attaching the front run retainer and division bar bracket to the door.
5. Slide the front run from the front run retainer and division bar.
6. Disconnect the regulator arm roller from the regulator arm by removing the roller retaining clip (Fig. 4) and pulling the arm from the roller.
7. Unsnap and remove the belt line weatherstrips from the door.
8. Pull the rear run down and out of the run slot in the door along the top of the glass opening.
9. Tilt the vent window and division bar assembly rearward and separate the vent window from the front run retainer and division bar. Then, remove the vent window and the front run retainer and division bar from the door.
10. Remove the glass and channel assembly from the door.
11. Remove the glass channel from the glass with the tool shown in Fig. 5.

Installation

1. Install the glass channel on the glass with the tool shown in Fig. 5.
2. Lubricate the window mechanism as shown in Part 42-02.
3. Place the glass and channel assembly in the door.
4. Position the vent window and the front run retainer and division bar in

the door. Then, insert the front run retainer and division bar in the rear edge of the vent window.
5. Position the glass and channel assembly in the front run retainer and division bar and the rear run. Then, place the vent window assembly into position in the door, and install the three screws attaching the vent frame to the upper leading edge of the door.
6. Install the belt line weatherstrips.
7. Insert the rear run into the slot along the top edge of the window opening.
8. Insert the retaining clip on the regulator arm roller and insert the roller in the glass channel.
9. Insert the window regulator arm pin in the roller and press firmly to lock the roller on the regulator arm.
10. Insert the front run in the front run retainer and division bar.
11. Install the screw attaching the front run retainer and division bar bracket to the door.
12. Install the vent window attaching screw at the belt line.
13. Adjust the window glass run as outlined in Adjustments.
14. Install the access cover on the door.

BRONCO

Removal
1. Remove the trim or access panel from the door.
2. Remove the glass lower stop from the door (Fig. 2).
3. Lower the glass and remove the belt inner weatherstrip.
4. Remove the vent window attaching screws (Fig. 2).
5. Pull the door glass top run down and away from the vent window assembly.
6. Remove the vent window assembly from the door (Fig. 2).
7. Disconnect the regulator arm from the roller and remove the roller from the glass channel.
8. Lift the glass and channel assembly from the door.

Installation
1. Lubricate the glass and channel assembly (Part 42-02).
2. Position the glass and channel assembly into the door and insert the roller into the glass channel.
3. Position the regulator arm to the roller and press the arm into the roller.
4. Position the vent window assembly in the door and install the attaching screws.
5. Insert the door glass top run into the top of the door.
6. Install the belt inner weatherstrip.
7. Install and adjust the glass lower stop.

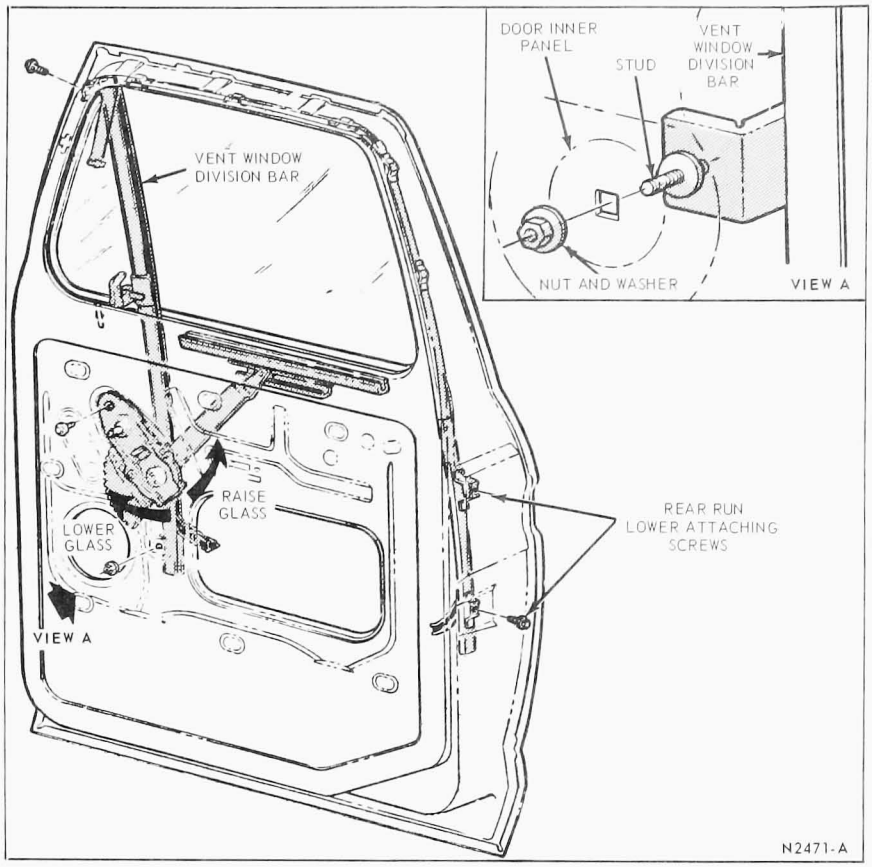

FIG. 3 Window Mechanism Adjustment—F-Series Truck

8. Install the trim panel on the door.

F-100 THROUGH F-750

Removal
1. Remove the door trim panel.
2. Remove the nut from the front run retainer stud (Fig. 6).
3. Remove three vent window assembly attaching screws from the front edge of the door (Fig. 6).
4. Lower the door glass and pull the glass run out of the upper run retainer near the vent window division bar only enough to allow removal of the vent window assembly.
5. Tilt the vent window and division bar assembly toward the rear of the door and remove the vent window from the door.
6. Rotate the front edge of the glass downward and lift the glass from the door.
7. Remove the glass from the glass channel with the tool show in Fig. 5.

Installation
1. Install the glass in the glass channel with the tool shown in Fig. 5.
2. Position the glass and channel assembly into the door, inserting the regulator arm roller into the slot of the glass channel (View B, Fig. 6).
3. Position the vent window and division bar into the door and insert the front edge of the glass into the division bar (front) run.
4. Install the three vent window attaching screws at the forward edge of the door (Fig. 6).
5. Insert the glass run into the upper run retainer near the division bar.
6. Install the nut on the front run retainer stud and adjust as outlined in the Adjustment Section.
7. Check the operation of the window and install the door trim panel.

L-SERIES

Removal
1. Remove the access panel from the door.
2. Remove the vent window division bar retaining screw at the belt line. Also, remove the four screws retaining the vent window assembly to the door frame. Remove the bolt retaining the run to the run retainer bracket.
3. Remove the vent window assembly from the door.
4. Lower the glass to the full down position and disconnect the regulator arms from the channel brackets (Fig. 7).

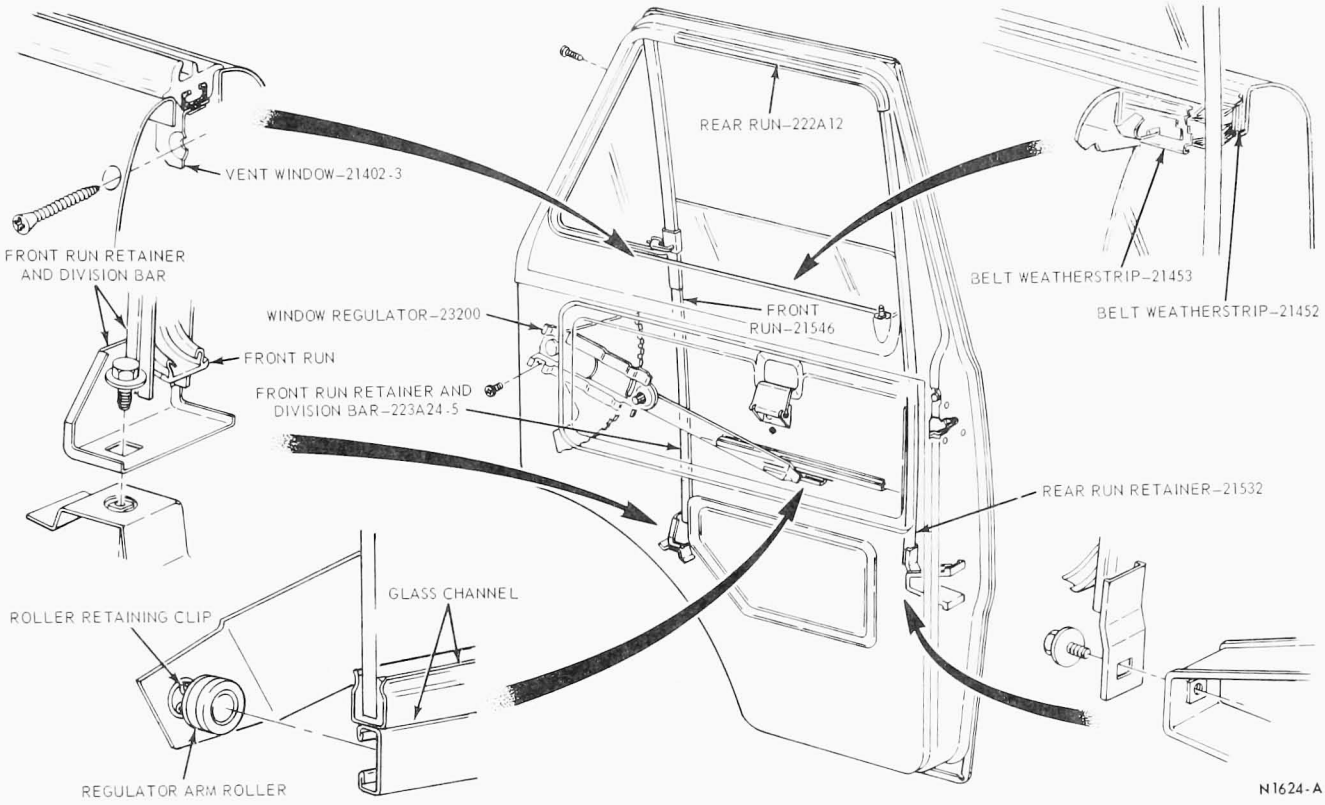

FIG. 4 Front Door Window Mechanism—Econoline

5. Move the regulator arms 3/4 of the way to the up position. Rotate the window glass 90 degrees and remove it through the access opening.

Installation

1. Insert the door glass into the access opening.
2. Lower the regulator arms and connect the regulator arms to the channel brackets on the glass.
3. Install the vent window assembly in the door and install the retaining screws.
4. Loosely install the run retainer in the retainer bracket and cycle the window up and down to be sure it is free from bind. Tighten the run retaining bolt.
5. Install the access panel in the door.

C-SERIES

1. Remove the door access hole cover plate.
2. Loosen the glass rear run upper and lower retaining screws.
3. Remove the division bar upper and center retaining screws and lower retaining bolts (Fig. 8).
4. Lower the door glass and disconnect the regulator arm from the glass channel roller by pulling the retaining clip (Fig. 9).
5. Tilt the top of the division bar toward the rear of the door, and remove the glass through the access hole.
6. Remove the channel from the glass with a glass channel replacer tool (Fig. 5).
7. Install the glass channel on the glass, using new glass tape. Trim the excess tape.
8. If necessary, assemble and install the roller assembly in the glass channel (Fig. 9).
9. Position the glass in the door, and snap the regulator arm pin into the roller assembly.
10. Loosely install the division bar upper and center retaining screws, and lower retaining bolts. Adjust the division bar for proper window operation and tighten the screws and bolts.
11. Adjust the rear run and tighten the screws.
12. Run a bead of sealer around the access hole cover plate, and install the cover plate.

W-SERIES

Removal

1. Remove the check strap and the lower inner panel from the door.
2. Remove the door inside handle by pressing the escutcheon against the door and removing the retaining pin from the handle and shaft (Fig. 10).
3. Remove the upper inner panel attaching screws. Then, pull the inner panel away from the door frame and remove the four door latch remote control attaching screws and nuts.
4. Lower the window and remove the clips retaining the roller assemblies (Fig. 11) to the window regulator arms and pull the arms from the glass channel and rollers. Then, remove the upper inner panel and window regulator from the door.
5. Remove the screws attaching the door latch to the door panel and remove the latch and remote control from the door.

GLASS AND CHANNEL REMOVAL TOOL (NO. 2900) AVAILABLE FROM SOMMER AND MALA GLASS MACHINE COMPANY, 5501 W. OGDEN AVENUE, CHICAGO 50, ILLINOIS

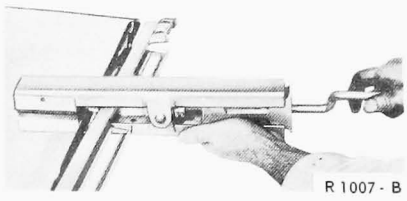

FIG. 5 Glass Channel Replacement

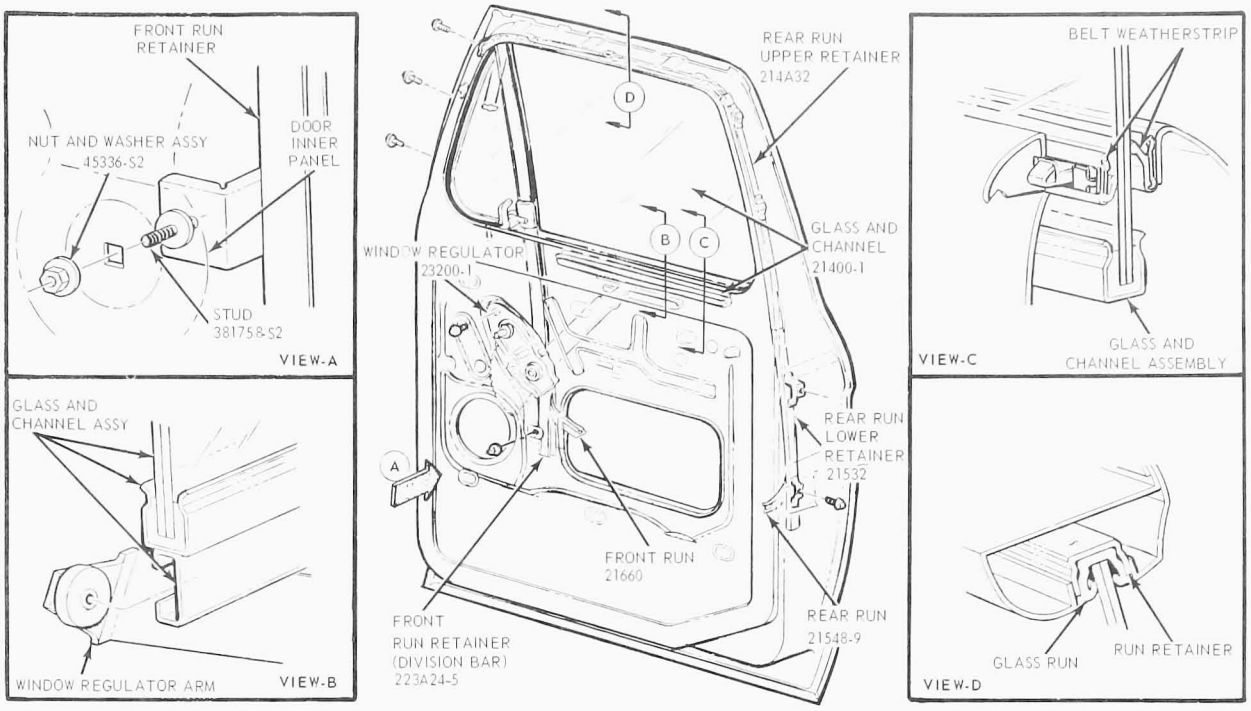

P1172-B

FIG. 6 Door Window Mechanism—F-Series

7. Remove two screws and nuts attaching the front run and division bar to the lower bracket (Fig. 11).
8. Remove the glass and channel from the door.
9. Remove the glass from the glass channel with the tool shown in Fig. 5.

Installation

1. Install the glass in the glass channel with the tool shown in Fig. 4.
2. Install the glass and channel in the glass runs.
3. Install the two front run and division bar attaching screws and nuts and adjust the front run snug against the glass.
4. Position the door latch and remote control to the door and install the latch attaching screws and nuts.
5. Position the upper inner panel to the door and the window regulator arms to the rollers in the glass channel. Then, install the retainers to retain the rollers on the window regulator arms.
6. Position the door latch remote control to the upper inner panel and install the attaching screws and nuts.
7. Position the upper inner panel to the door and install the attaching screws.
8. Install the door inside handle.
9. Position the lower inner panel and check strap to the door and install the attaching screws.
10. Check the operation of the door latch and window regulator.

FRONT DOOR WINDOW REGULATOR

ECONOLINE

Removal

1. Open the door and lower the window glass.
2. Remove one screw attaching the handle to the window regulator shaft and remove the handle.
3. Remove the access cover from the door inner panel.
4. Disconnect the regulator arm roller from the regulator arm by removing the roller retaining clip (Fig. 4).
5. Remove four screws attaching the window regulator to the door inner panel and remove the window regulator from the door.

Installation

1. Lubricate the window mechanism as shown in Part 42-02.
2. Position the regulator to the door inner panel and install the four attaching screws.
3. Insert the retaining clip on the roller and insert the roller in the glass channel.
4. Insert the window regulator arm pin in the roller and press firmly to lock the roller to the regulator arm.
5. Check the operation of the window mechanism and install the access cover on the door inner panel.

BRONCO

Removal

1. Remove the door inside handle, access cover plate or trim panel, and water shield.
2. Lower the door glass and remove the hairpin clip that secures the channel roller to the regulator arm (Fig. 2).
3. Slide the door glass to the top of the door and securely tape it in this position.
4. Crank the regulator assembly handle to raise the regulator arm to its highest position.
5. Remove the regulator assembly handle.
6. Remove the four screws that secure the regulator assembly to the door inner panel. Remove the regulator through the access hole opening.

Installation

1. Lubricate the new regulator assembly if necessary. Position the regulator assembly in the door, and secure it with four screws.
2. Install the regulator handle, and crank the handle until the regulator arm is in its lowest position.
3. Untape and lower the door glass and position the channel roller on the regulator arm and secure it with a hairpin clip.

4. Check the window operation. If the window glass does not raise or lower far enough, loosen the regulator assembly retaining screws and shift the regulator up or down as may be necessary.
5. Install the water shield, access cover plate or trim panel, and door handle.

F-SERIES

Removal

1. Remove the door trim panel.
2. Remove the three regulator assembly-to-door inner panel retaining screws (Fig. 6). Temporarily support the glass assembly in a half down position.
3. Remove the regulator assembly from the door by allowing the regulator arm roller to slide out of the channel on the glass lower frame.

Installation

1. Position the regulator assembly to the glass channel and to the door inner panel. Install the three regulator assembly retaining screws but do not tighten them.
2. Remove the temporary glass support and roll the window all the way down. The top edge of the glass should be about flush with the belt line. If adjustment is necessary, rotate the regulator down and forward to lower the glass, or up and rearward to raise the glass. Tighten the regulator attaching screws when the glass is about flush with the belt line.
3. Install the door trim panel.

L-SERIES

Removal

1. Remove the access panel from the door.
2. Remove the channel bracket retaining screws and remove the bracket (Fig. 7). Lower the glass to the bottom of the door.
3. Remove the regulator handle by removing the retaining screw.
4. Remove the two screws retaining the equalizer bracket to the door inner panel and remove the bracket.
5. Remove the regulator retaining screws and remove the regulator from the door.

Installation

1. Position the regulator to the door panel and install the retaining screws.
2. Install the channel bracket to the glass and channel assembly.
3. Install the equalizer bracket and connect the regulator arms rollers to the channel brackets.
4. Install the regulator handle.
5. Install the access panel.

C-SERIES

Removal

1. Remove the door access hole cover plate.
2. Lower the door glass, and disconnect the regulator arm from the glass channel roller by pulling the retaining clip (Fig. 8).
3. Raise the door glass and tape it in position.
4. Remove the window regulator handle.
5. Remove the regulator retaining screws, and remove the regulator through the access hole.

Installation

1. Lubricate the new regulator assembly, position the regulator in the door, and install the retaining screws.
2. Install the regulator handle, and crank the regulator arm to the lowered position.
3. Lower the door glass, assemble the roller assembly in the glass channel if it has been removed, and snap the regulator arm pin into the roller.
4. Check the door glass operation. If it does not close completely, or does not lower to the belt line, loosen the regulator retaining screws and shift the regulator up or down as may be

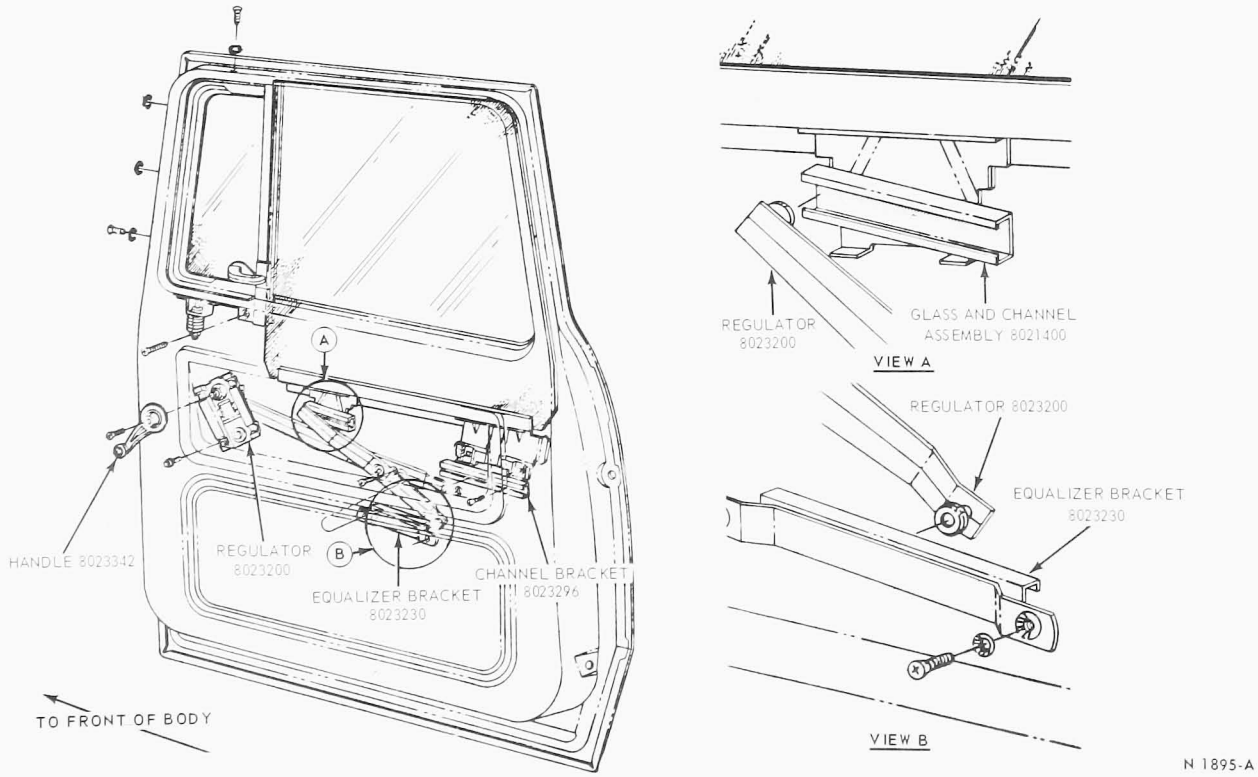

FIG. 7 Door Window Mechanism—All L-Series

necessary. Then, tighten the regulator retaining screws.
5. Run a bead of sealer around the access hole cover plate, and install the cover plate.

W-SERIES

Removal
1. Remove the check strap and the lower inner panel from the door.
2. Remove the door inner handle by pressing the escutcheon against the door and removing the retaining pin from the handle and shaft.
3. Remove the upper inner panel attaching screws. Then, pull the inner panel away from the door frame and remove the four screws, nuts, and washers attaching the door latch remote control to the inner panel (Fig. 10).
4. Lower the window and remove two clips retaining the roller assemblies to the window regulator arms, and pull the arms from the glass channel and rollers. Then, remove the upper inner panel and window regulator from the door.
5. With the upper inner panel on a bench, remove the window regulator handle as outlined in Step 2.
6. Remove four regulator attaching screws and remove the regulator from the upper inner panel.

Installation
1. Position the window regulator to the door upper inner panel and install the four attaching screws.
2. Position the upper inner panel to the door and remote control and install the four remote control attaching screws, washers, and nuts.
3. Position the regulator to the glass channel and rollers and install the roller retaining clips.
4. Install the upper inner panel attaching screws.
5. Install the window regulator and door inner handles.
6. Position the lower inner panel and check strap to the door and install the attaching screws.
7. Check the operation of the window regulator and close the door.

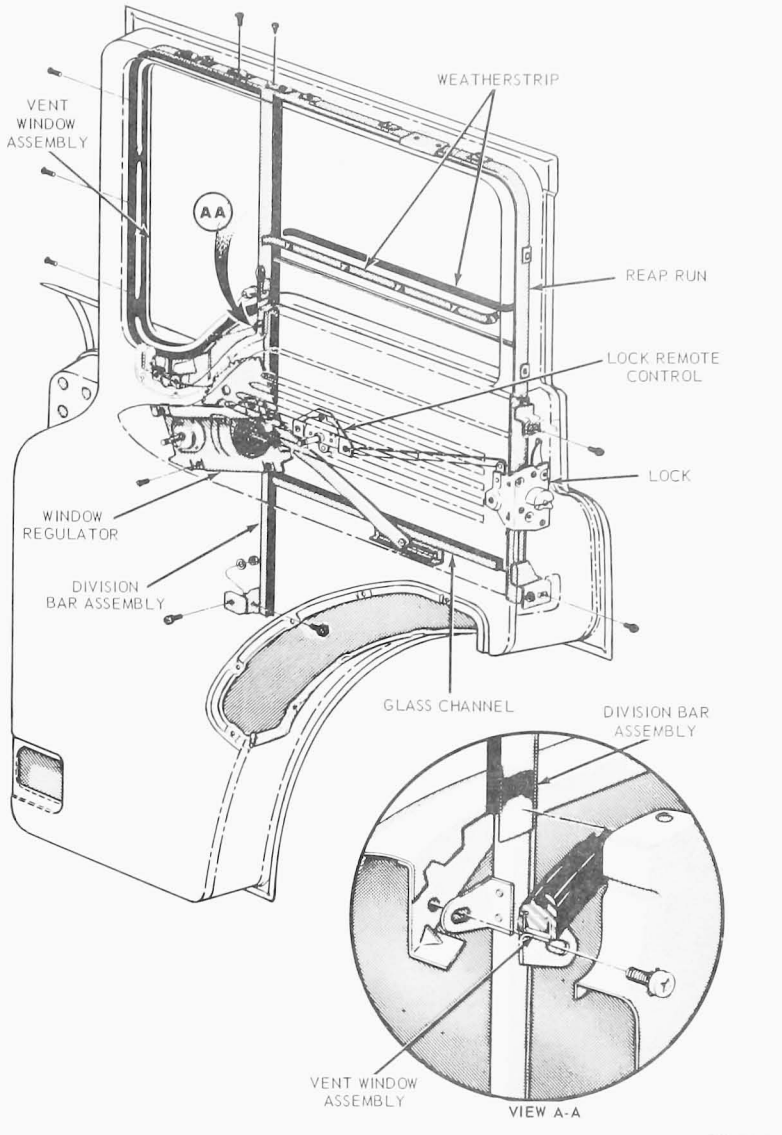

FIG. 8 Door Latch and Window Mechanism—C-Series

DOOR GLASS BELT WEATHERSTRIP

ECONOLINE

Removal
1. Remove the access cover from the door inner panel.
2. Disconnect the regulator arm roller from the regulator arm by removing the roller retainer clip (Fig. 4) and pulling the arm from the roller. Allow the glass to rest at the bottom of the runs.
3. Unsnap and remove the belt line weatherstrip(s) from the door.

Installation
1. Position the weatherstrip to the door and snap into place.
2. Insert the retaining clip on the regulator arm roller and insert the roller in the glass channel.
3. Insert the window regulator arm pin in the roller and press firmly to lock the roller on the regulator arm.
4. Install the access cover on the door inner panel.

GLASS REAR RUN

BRONCO

1. Remove the trim or access panel from the door.

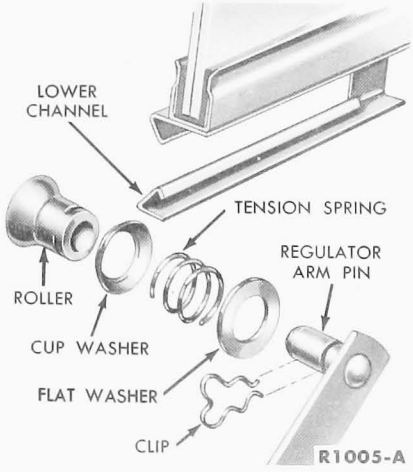

FIG. 9 Channel Roller Assembly—C-Series

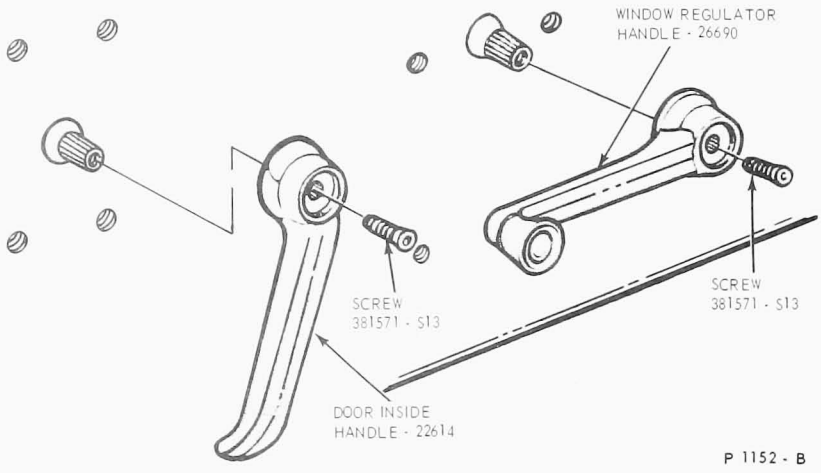

FIG. 10 Door and Window Handle Installation—W-Series

2. Raise the glass to the full up position.
3. Remove two screws attaching the run to the rear edge of the door (Fig. 2), and remove the run from the door.
4. Position the rear run into the door, and install the two attaching screws.
5. Adjust the rear run and install the door trim panel.

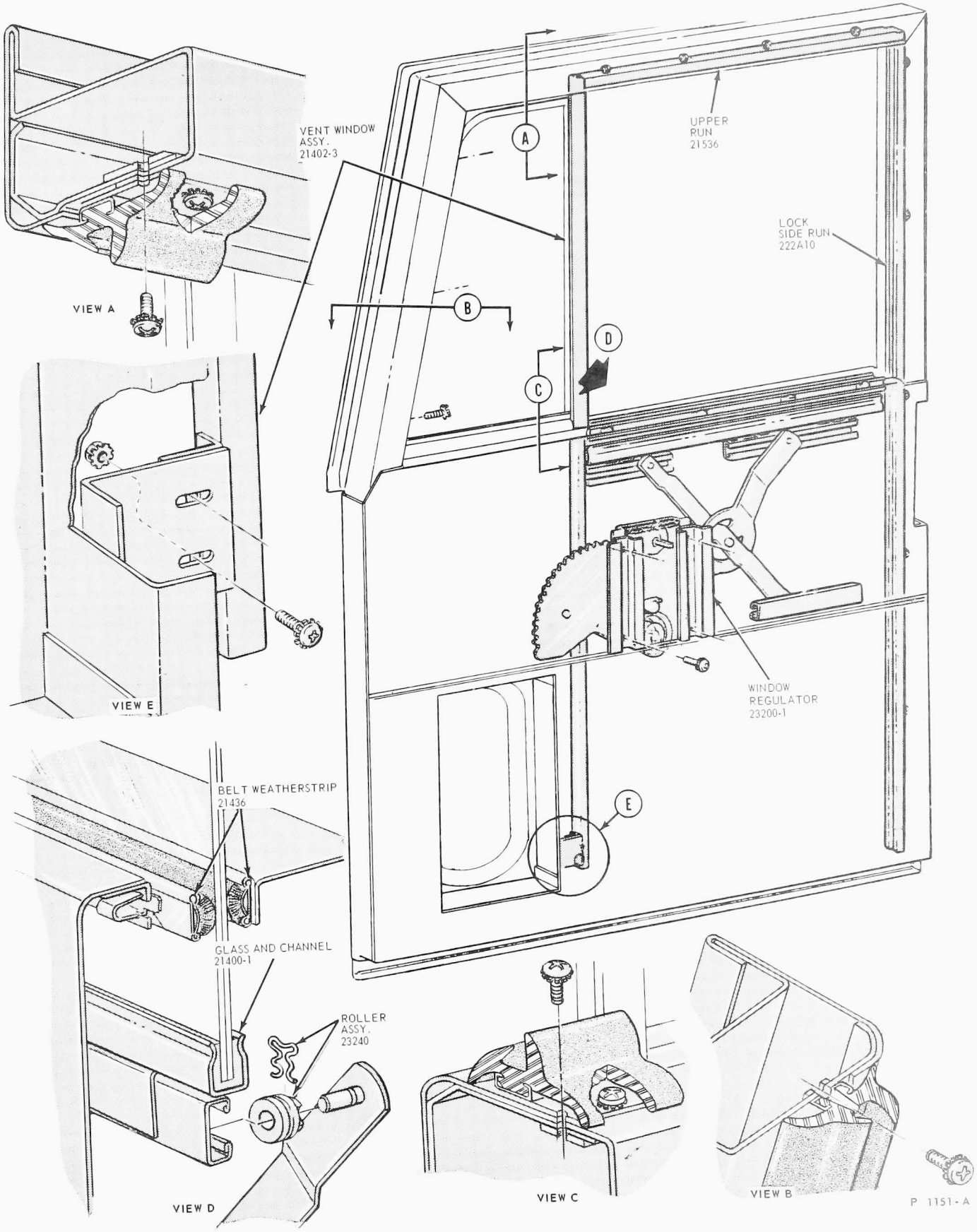

FIG. 11 Door Window Mechanism—W-Series

PART 42-15 Vent Window Mechanism

COMPONENT INDEX Applies to Models ad Indicated	MODEL APPLICATION							
	All Models	Bronco	Econoline	F-Series	L-Series	C-Series	W-Series	B-Series
REMOVAL AND INSTALLATION								
Frame Assembly – Vent Window		15-01	15-01	15-02	15-02	15-02	15-03	
Glass – Vent Window		15-01	15-01	15-01	15-01		15-01	

A page number indicates that the item is for the vehicle(s) listed at the head of the column.
N/A indicates that the items is not applicable to the vehicle(s) listed.

REMOVAL AND INSTALLATION

VENT WINDOW GLASS

ALL EXCEPT C-SERIES

Removal

1. Open the vent window.
2. Push the glass from the glass frame with the tool shown in Fig. 1.
3. Clean the glass frame of tape and sealer.

Installation

1. Apply sealer to the glass frame.
2. Install the glass and new tape in the glass frame with the tool shown in Fig. 1.
3. Trim the excess edges of the tape around the glass frame and clean the glass and surrounding area.

VENT WINDOW GLASS FRAME

W-SERIES

Refer to Figs. 9 and 10, Part 42-04.

Removal

1. Remove the check strap and the lower inner panel from the door.
2. Remove the door inside handle by pressing the escutcheon against the door and removing the retaining pin from the handle and shaft.
3. Remove the upper inner panel attaching screws. Then, pull the inner panel away from the door frame and remove the four remote control attaching screws and nuts.
4. Lower the glass and remove the clips retaining the roller assemblies to the window regulator arms. Pull the arms from the glass channel and rollers. Then, remove the upper inner panel and window regulator from the door.
5. Remove the vent window adjustment nut and spring from the vent window lower pivot. Then, press the vent window glass and frame downward to release the upper pivot and remove the vent window and frame from the door.

Installation

1. Position the vent window glass and frame in the opening and engage the upper pivot. Install the spring and adjustment nut on the lower pivot and tighten for the desired tension.
2. Position the upper inner panel to the door and the window regulator arms to the rollers in the glass channel. Then, install the retainers to retain the rollers on the window regulator arms.
3. Position the remote control to the upper inner panel and install the attaching screws and nuts.
4. Position the upper inner panel to the door and install the attaching screws.
5. Install the door inside handle.
6. Position the lower inner panel and check strap to the door and install the attaching screws.
7. Check the operation of the door latch, window regulator and the vent window.

GLASS AND CHANNEL REMOVAL TOOL (NO. 2900) AVAILABLE FROM SOMMER AND MALA GLASS MACHINE COMPANY, 5501 W. OGDEN AVENUE, CHICAGO 50, ILLINOIS

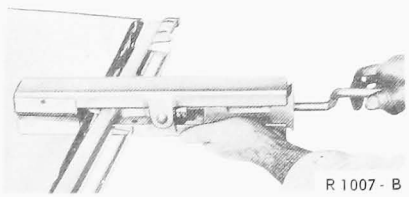

FIG. 1 Vent Glass Replacement

VENT WINDOW ASSEMBLY

BRONCO

Removal

1. Remove the trim panel or door access panel from the door.
2. Remove the glass lower stop from the door.
3. Lower the glass and remove the belt inner and outer weatherstrips.
4. Pull the glass top run down and away from the vent window assembly.
5. Remove four screws attaching the vent window assembly to the door frame (Fig. 2, Part 42-04).
6. Remove one screw attaching the vent window assembly to the door at the belt line near the division bar.
7. Tilt the vent window assembly rearward and remove the assembly from the door.

Installation

1. Position the vent window assembly in the door. Be sure the division bar is properly seated in the top end of the front run (Fig. 2, Part 42-04).
2. Install the five screws attaching the vent window assembly to the door.
3. Insert the glass top run into the recess along the top of the door.
4. Install the belt inside and outside weatherstrips.
5. Install the glass lower stop. Then, install the access or trim panel on the door.

ECONOLINE

Refer to Fig. 3, Part 42-04.

Removal

1. Remove the access cover from the door inner panel.
2. Remove three screws attaching the vent window assembly to the upper leading edge of the door.

3. Remove one screw attaching the vent window assembly to the door at the belt line.
4. Remove one screw attaching the front run retainer and division bar bracket to the door.
5. Slide the front run out of the front run retainer and division bar.
6. Disconnect the regulator arm roller from the regulator arm by removing the roller retaining clip and pulling the arm from the roller.
7. Unsnap and remove the belt line weatherstrips from the door.
8. Pull the rear run down and out of the run slot along the top of the glass opening.
9. Tilt the vent window and division bar assembly rearward and separate the vent window from the front run retainer and division bar. Then, remove the vent window and the front run retainer and division bar from the door.
10. Remove two screws attaching the vent window upper pivot to the vent window frame.
11. Remove the nut, spring, spacer and bushing from the vent window lower pivot. Then, separate the vent window glass and frame from the vent window frame.
12. To remove the weatherstrip, remove two screws from the top of the vent window frame. Then, straighten the weatherstrip retaining tabs and remove the weatherstrip.

Installation

1. Position the weatherstrip to the vent frame and bend the retaining tabs down to retain the weatherstrip. Install the two screws at the top of the vent frame.
2. Position the glass frame to the vent frame and install spacer, bushing, spring and nut on the vent window lower pivot. Adjust the spring tension to hold the vent window in any position at highway speeds.
3. Position the vent window upper pivot to the glass frame pivot and vent frame and install the two attaching screws.
4. Position the vent window and the front run retainer and division bar in the door. Then, insert the front run retainer and division bar in the rear edge of the vent window.
5. Position the glass and channel assembly in the front run retainer and division bar. Then, place the vent window assembly into position in the door, and install three screws attaching the vent frame to the upper leading edge of the door.
6. Install the belt line weatherstrips.
7. Insert the rear run into the slot along the top edge of the window opening.
8. Insert the retaining clip on the regulator arm roller and insert the roller in the glass channel.
9. Insert the window regulator arm pin in the roller and press firmly to lock the roller on the regulator arm.
10. Insert the front run in the front run retainer and division bar.
11. Install the screw attaching the front run retainer and division bar bracket to the door.
12. Install the vent window attaching screw at the belt line.
13. Adjust the window glass runs.
14. Install the access cover on the door inner panel.

F-SERIES

Refer to Fig. 6, Part 42-04.

Removal

1. Remove the door trim panel retaining screws and remove the door trim panel.
2. Remove the adjusting nut and washer that retains the division bar to the door inner panel.
3. Remove the three screws that attach the vent assembly to the leading edge of the door.
4. Lower the door glass.
5. Pull the top weatherstrip part way out of the door window frame in the division bar area.
6. Tilt and remove the vent window and division bar assembly from the door.
7. Separate the run and retainer from the vent window division bar.
8. Remove two vent upper pivot-to-vent frame screws.
9. Remove the retaining nut and tension spring from the vent window lower pivot.
10. Separate the vent glass retainer and the pivot stops from the vent frame and weatherstrip assembly.

Installation

1. Position the vent glass retainer assembly with the pivot stops into the vent window frame and weatherstrip assembly.
2. Install the two upper pivot-to-frame retaining screws.
3. Install the pivot tension spring and retaining nut. Adjust spring tension so that the vent will stay open at highway speeds.
4. Position the run and retainer assembly in the vent window assembly.
5. Position the vent window and division bar assembly into the door and to the glass edge.
6. Install the three vent window frame-to-leading edge of door window frame retaining screws.
7. Position the weatherstrip back into the door window frame (division bar area).
8. Install the division bar lower run-to-door inner panel adjusting screw washer and nut (adjust the run for proper door window operation).
9. Install the door trim panel.

L-SERIES

Removal

1. Remove the access panel from the door.
2. Remove the bolt retaining the bottom of the run retainer to the retainer bracket. (Fig. 2).
3. Remove the division bar retaining screw from the door inner panel at the belt line.
4. Remove the four screws retaining the vent window assembly to the door frame.
5. Remove the channel bracket retaining screws and remove the bracket. Remove the vent window assembly from the door (Fig. 2).
6. Place the vent assembly on a bench and pry the run retainer from the division bar.
7. Remove the top pivot screw from the frame assembly.
8. Remove the nut from the lower pivot. Also remove the nut, spring and nylon bushing.
9. Remove the glass assembly, washer and nylon bushing from the frame.
10. Remove the weatherstrip from the frame retainer assembly.
11. Drill out the four rivets retaining the division bar to the retainer and remove the division bar.

Installation

1. Position the division bar to the retainer and install the four rivets.
2. Install the weatherstrip to the frame retainer.
3. Install the glass assembly, washer, nylon bushings and springs. Adjust the spring tension and install the lower pivot nut.
4. Install the top pivot screw.
5. Snap the run retainer into place on the frame assembly.
6. Position the vent window assembly in the door and install the four retaining screws in the door frame. Also install the division bar retaining screw at the belt line.
7. Position the door glass and install the channel bracket.
8. Install the front run retainer in the retainer brackets.
9. Install the access panel.

C-SERIES

Refer to Fig. 7, Part 42-04.

1. Remove the door access hole cover plate. Remove the lower front garnish moulding from just below the vent window.

2. Remove the screws retaining the top of the division bar to the door window frame. Remove the screw retaining the center of the division bar, run assembly, and vent window frame retainer assembly to the inner panel. (View AA, Fig. 7, Part 42-04).
3. Remove the bolts retaining the division bar lower end to the mounting bracket on the door.
4. Lower the door window glass.
5. Remove the screws retaining the vent window and frame retainer to the front of the door frame. Pull the rear upper run out of the door frame at the division bar.
6. Remove the pivot screws retaining the vent frame and clamp to the vent window frame retainer assembly, and remove the vent window and frame assembly.
7. Remove the vent window weatherstrip from the frame and the door.
8. Install the weatherstrip on the vent window frame and door. Position the vent window frame assembly to the frame retainer assembly and install the pivot retaining clamp and screws.
9. Position the vent window and frame retainer assembly to the door frame and install the screws. Snap the upper rear run in place.
10. Install the bolts retaining the division bar lower end to the mounting bracket on the door.
11. Install the screw retaining the center of the division bar, run assembly and vent window frame retainer assembly to the inner panel. Install the screw retaining the top of the division bar to the door window frame.
12. Adjust the division bar for proper glass operation and tighten the division bar retaining screws and bolts.
13. Install the door access hole cover plate and lower front garnish moulding.

W-SERIES

Refer to Figs. 9 and 10, Part 42-04.

Removal

1. Remove the check strap and the lower inner panel from the door.
2. Remove the door inside handle by pressing the escutcheon against the door and removing the retaining pin from the handle and shaft.
3. Remove the upper inner panel attaching screws. Then, pull the inner panel away from the door frame and remove the four remote control attaching screws and nuts.

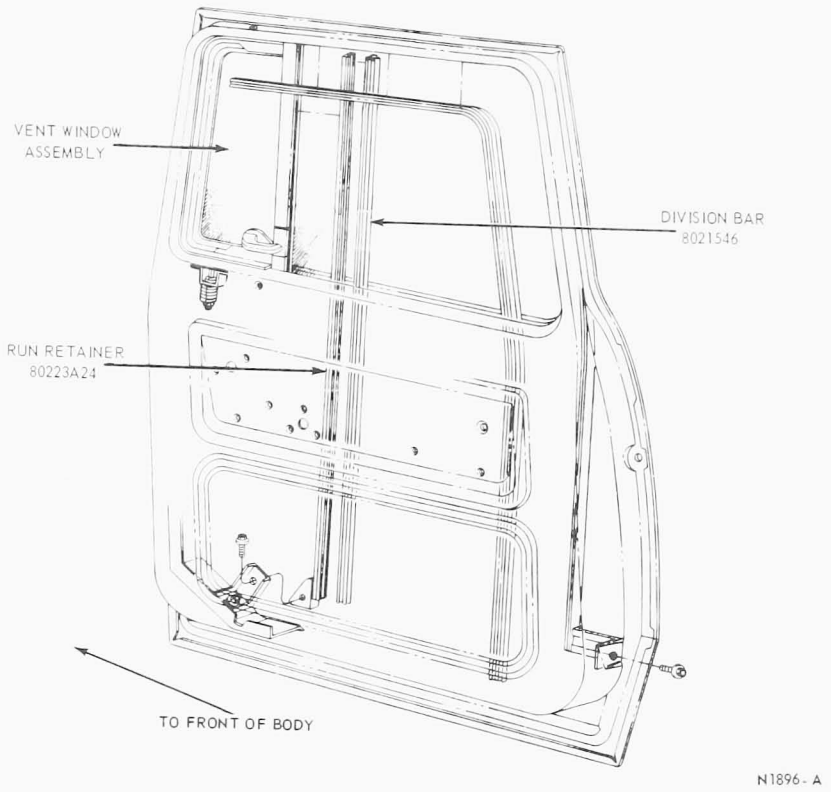

FIG. 2 Vent Window Assembly—L-Series

4. Lower the window and remove the clips retaining the roller assemblies to the window regulator arms and pull the arms from the glass channel and rollers. Then, remove the upper inner panel and window regulator from the door.
5. Remove the screws attaching the remote controls and the door latch to the door panel and remove the latch and remote controls from the door.
6. Remove two screws and nuts attaching the lower end of the division bar glass front run to the door.
7. Remove the glass and channel from the door.
8. Remove two screws attaching the top of the division bar and glass run to the door.
9. Pull the vent window weatherstrip from the retainer and remove three screws attaching the retainer to the door. Then, remove the division bar, vent window and weatherstrip from the door.

Installation

1. Position the division bar, vent window and weatherstrip to the door and install the three weatherstrip retainer attaching screws.
2. Position the door glass in the runs and install the two division bar and front run lower attaching screws and nuts.
3. Install the two division bar and glass run upper attaching screws.
4. Adjust the lower end of the division bar and glass run for a snug fit against the door glass. Then, tighten the two attaching screws and nuts.
5. Position the door latch and remote controls to the door and install the attaching screws and nuts.
6. Position the upper inner panel to the door and the window regulator arms to the rollers in the glass channel. Then, install the retainers to retain the rollers on the window regulator arms.
7. Position the remote control to the upper inner panel and install the attaching screws and nuts.
8. Position the upper inner panel to the door and install the attaching screws.
9. Install the door inside handle.
10. Position the lower inner panel and check strap to the door and install the attaching screws.
11. Check the operation of the door latch, window regulator and vent window.

PART 42-25 Pivot Type Rear Door and Side Window

REMOVAL AND INSTALLATION

MOVABLE GLASS—SLIDING DOOR

ECONOLINE AND CLUB WAGON

1. Remove one screw attaching each window prop to the door.
2. Remove three screws attaching the glass frame to the glass opening, and remove the glass and frame, weatherstrip and latch from the door (Fig. 1).
3. Remove the latch handle from the glass and install on new glass, if the frame is to be replaced (Fig. 1).
4. Position the glass and frame to the glass opening and install the three attaching screws.
5. Position the window props to the door and install the attaching screws.

MOVABLE GLASS—EXCEPT SLIDING DOOR

ECONOLINE AND CLUB WAGON

1. Remove three screws attaching the window latch plate to the inner panel.
2. Remove three screws attaching the window glass frame to the body opening, and remove the glass and frame, weatherstrip, and latch from the vehicle (Fig. 2).
3. Remove the latch from the window frame and install on the new frame, if the frame is to be replaced.
4. Position the glass and frame assembly to the body opening and install the three attaching screws.
5. Position the latch plate to the inner panel and install the three attaching screws.

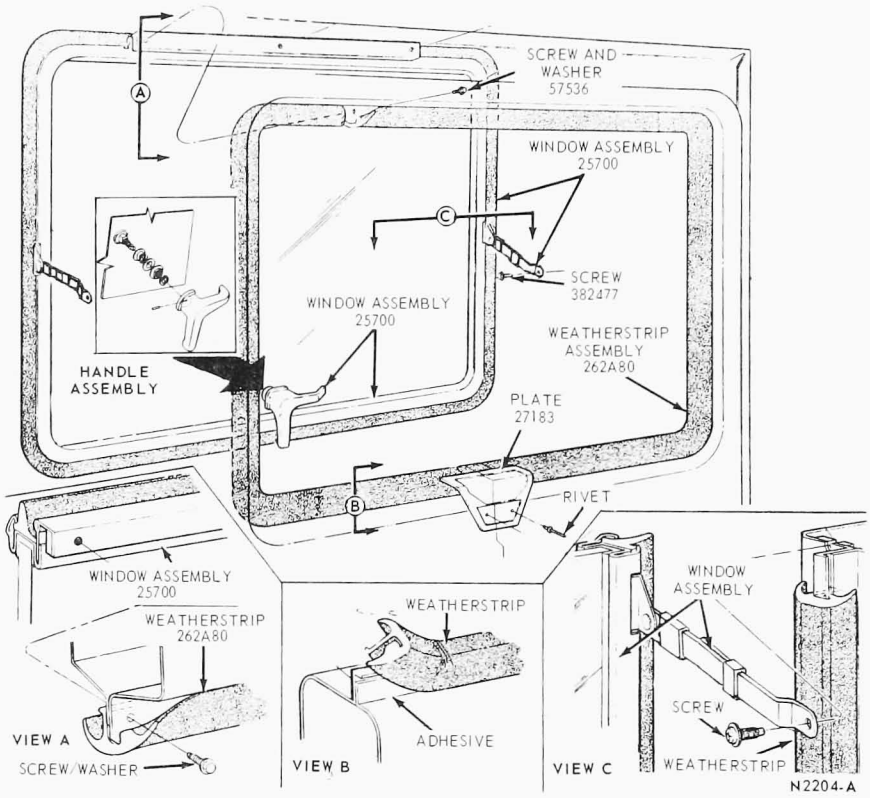

FIG. 1 Movable Glass Installation—Sliding Cargo Door Econoline and Club Wagon

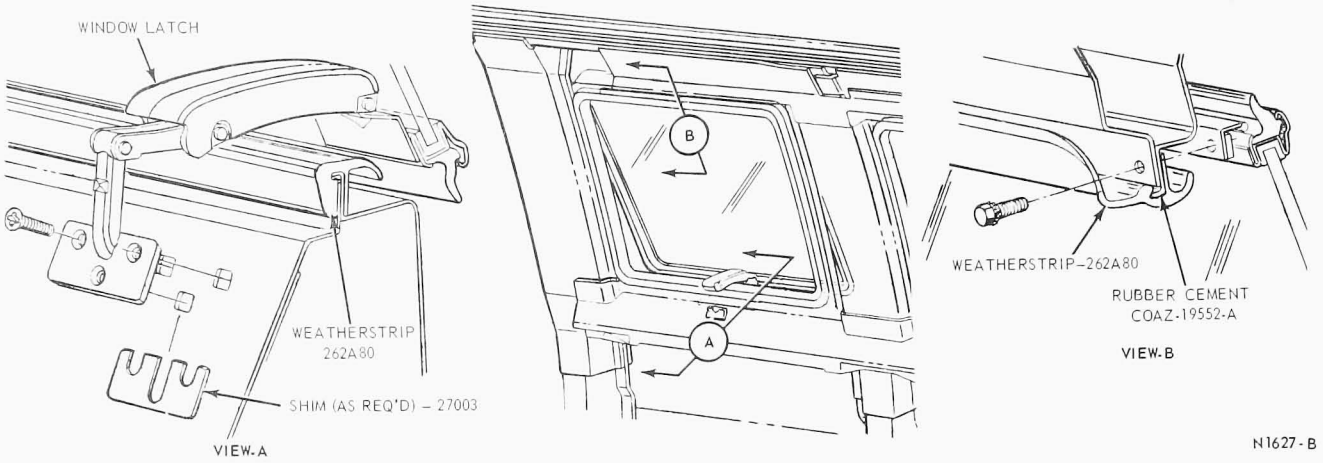

FIG. 2 Body Side and Rear Moveable Window Installation—Econoline

Stationary Window Glass

GROUP 43

PART 43-01 Stationary Glass — Weatherstrip Type Seal

COMPONENT INDEX Applies to Models as Indicated	All Models	Bronco	Econoline	F - Series	L - Series	C - Series	W - Series	B - Series	P - Series
REMOVAL AND INSTALLATION									
Back Window Glass		01-04	N/A	01-04	01-04	01-04	01-03	N/A	N/A
Moveable Back Window Glass				01-08					
Side and Back Window Glass			01-08						
Windshield		01-03	01-02	01-01	01-01	01-01	01-02	N/A	N/A
Quarter Window Glass		01-05							

A page number indicates that the item is for the vehicle(s) listed at the head of the column.
N/A indicates that the item is not applicable to the vehicle(s) listed.

REMOVAL AND INSTALLATION

WINDSHIELD

F-AND L-SERIES

Removal

1. Remove the windshield wiper arms and blades.
2. Remove the inside rear view mirror and bracket.
3. Loosen the weatherstrip around the windshield opening.
4. Push the windshield glass, and mouldings (if so equipped) out of the windshield opening.
5. Remove the mouldings (if so equipped) from the weatherstrip (Fig. 1).
6. Remove the weatherstrip from the glass.
7. Clean the glass and/or weatherstrip of all old sealer if either is to be re-used.

Installation

1. Clean the windshield opening flange to remove all old sealer or other foreign material.
2. Apply sealer (19563) to the windshield opening flange.
3. Position the weatherstrip on the windshield.
4. Insert a draw cord in the pinch weld opening of the weatherstrip all around the weatherstrip. Overlap the cord about 18 inches at the lower center of the glass. Tape the ends of the cord to the glass as shown in Fig. 2.
5. Coat the weatherstrip mounting surfaces with rubber lubricant (19583). Position the mouldings on the weatherstrip (Fig. 1).
6. Position the windshield and weatherstrip to the windshield opening.
7. With an assistant applying hand pressure to the outside of the windshield, pull the draw cord to pull the lip of the weatherstrip over the windshield opening flange. Draw the weatherstrip lip over the lower flange, each side of the flange, and then over the upper flange.
8. Install the rear view mirror and bracket.
9. Clean the glass and surrounding area.
10. Install the windshield wiper arms and blades.

C-SERIES

Removal

This series truck has a two-piece windshield. Therefore, the following procedures apply to only one-half of the windshield. The procedures apply to custom cab models. When working on a standard cab, skip the steps regarding outside mouldings.

1. Remove the windshield wiper arm assembly.
2. Snap the upper and lower joint covers off the mouldings at the center.
3. Remove the windshield garnish lower moulding.
4. Start at the upper center corner, pull down the weatherstrip, and push the windshield and weatherstrip out of

the opening.
5. Remove the weatherstrip from the glass, and remove the outside mouldings from the weatherstrip.
6. Clean the windshield opening mounting flange, and repair any wavy areas as necessary.
7. Clean the weatherstrip with cleaning solvent to remove all old sealer and cement. Install the outside mouldings in the weatherstrip.
8. Apply caulk and sealer (19563) to the weatherstrip and the opening flange.
9. Install the weatherstrip on the glass, and install a draw cord in the weatherstrip flange slot all around the weatherstrip and let it overlap at the bottom center. Coat the weatherstrip mounting surfaces with rubber lubricant.
10. Position the windshield and weatherstrip assembly in the opening. With a helper applying hand pressure from outside, start at the inside bottom center and pull the weatherstrip lip over the flange with the draw cord (Fig. 2).
11. Install the windshield lower garnish moulding, the windshield wiper arm assembly, and the upper and lower center joint covers.
12. Water test the installation for leaks, and seal with additional caulk and sealer if necessary.

W-SERIES

Removal
1. Remove the windshield wiper arm and blade assemblies.
2. Unlock the weatherstrip around the entire perimeter of the windshield (Fig. 3).
3. Working from inside the vehicle, push the windshield from the weatherstrip and remove the windshield from the vehicle.
4. Remove the weatherstrip from the glass opening and division bar.

Installation
1. Position the weatherstrip to the windshield opening and division bar.
2. Apply rubber lube to the weatherstrip and insert the windshield in the weatherstrip groove.
3. Lock the windshield weatherstrip (Fig. 3), and clean the windshield, weatherstrip, and body around the windshield.
4. Install the windshield wiper arms and blades.

ECONOLINE

Removal
1. Remove the windshield wiper arm and blades from the vehicle.
2. Starting at the inside top of the windshield, push the windshield and weatherstrip from the windshield opening.
3. Remove the weatherstrip and mouldings (if so equipped) from the windshield glass.
4. Remove all old sealer from the weatherstrip and windshield opening flange.

Installation
1. Apply sealer (19554) in the glass opening groove of the weatherstrip.
2. Position the weatherstrip on the glass and position the mouldings (if so equipped) in the weatherstrip (Fig. 4).
3. Install a pull cord (1/8 inch sash cord) in the body opening groove of the weatherstrip. Overlap the cord about 18 inches at the lower center of the glass and tape the ends of the cord to the inside of the glass (Fig. 2).
4. Apply sealer (19554) to the windshield opening flange.
5. Position the windshield and weatherstrip to the body opening.
6. With an assistant applying hand pressure from the outside, pull the draw cord to pull the lip of the weatherstrip over the windshield opening flange. Draw the

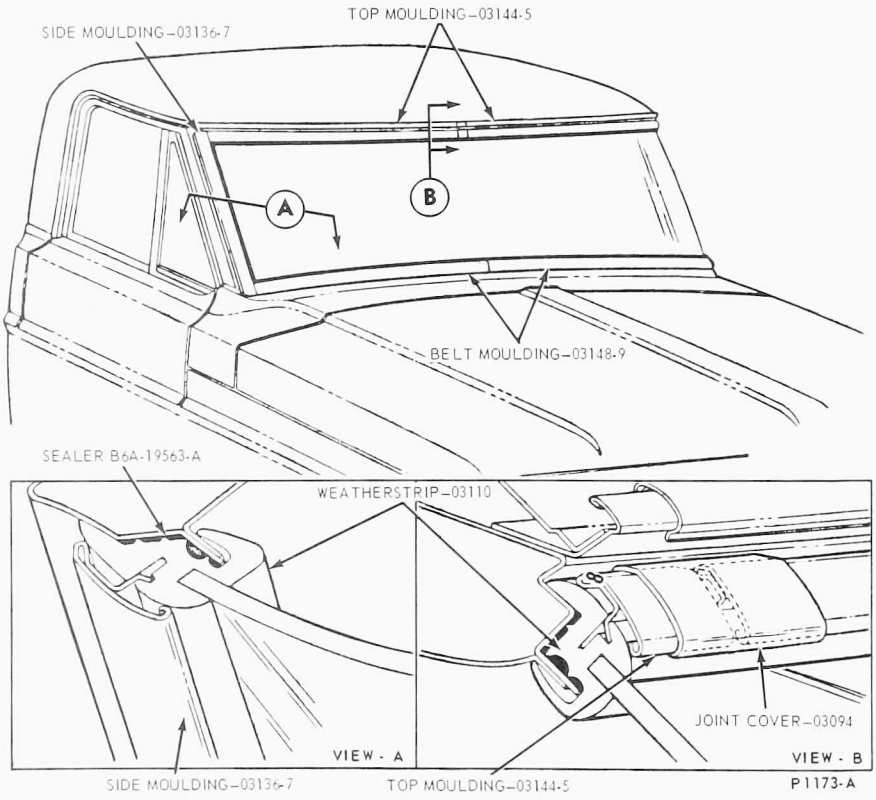

FIG. 1 Windshield Installation—F-Series Shown—L-Series Typical

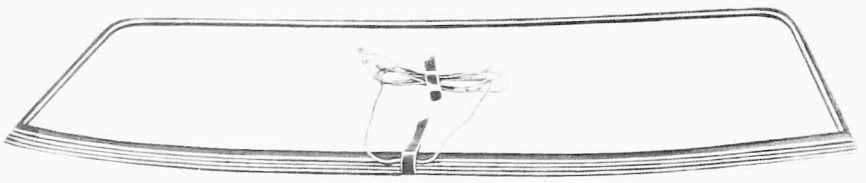

P1189 A

FIG. 2 Draw Cord Installed—Typical

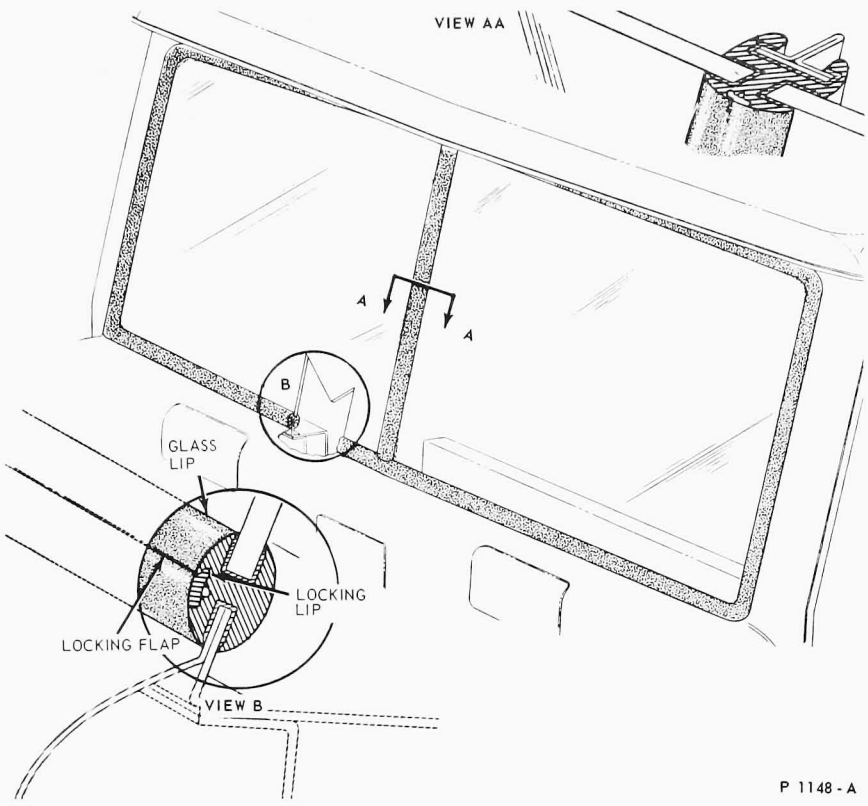

FIG. 3 Windshield Installation—W-Series—C-Series Typical

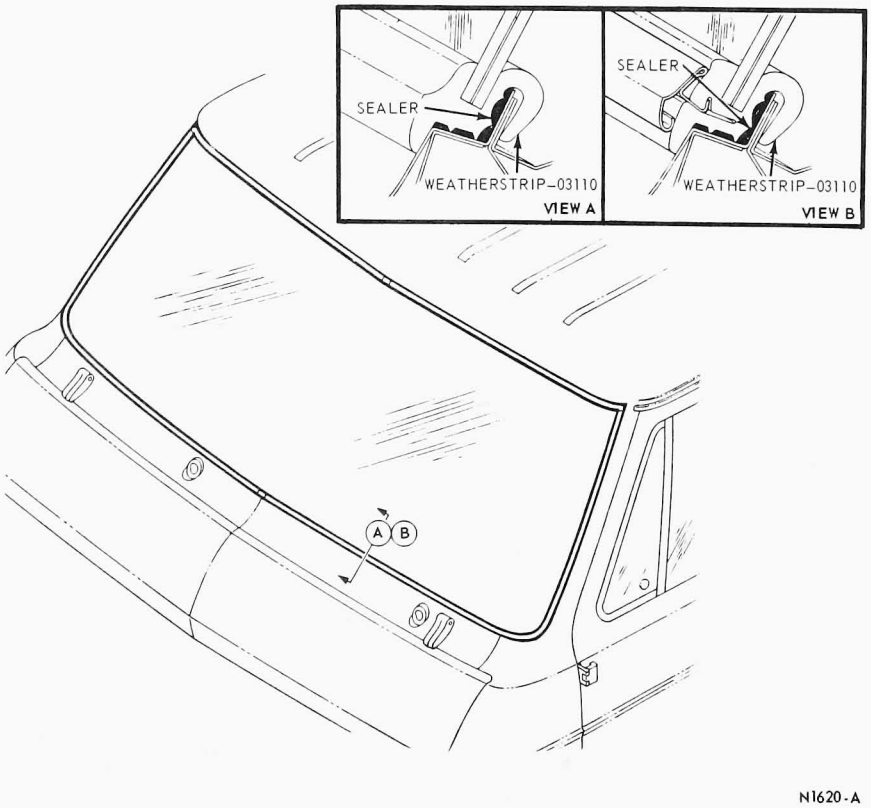

FIG. 4 Windshield Installation—Econoline

weatherstrip over the lower flange, each side flange, and then over the upper flange.
7. Clean all excess sealer from the windshield, weatherstrip and surrounding areas.
8. Install the windshield wiper arms and blades and test for water leaks.

BRONCO

Removal

1. Remove the windshield wiper arms and blades.
2. On roofless vehicles, ensure that the windshield is held securely in position by the two locking knobs on the dash panel.
3. Working from inside the vehicle, starting at the upper left corner and working across the top, pull the weatherstrip out of the glass opening (Fig. 5).
4. Remove the weatherstrip from the glass.

Installation

1. Clean the weatherstrip with cleaning solvent.
2. Clean the glass opening, check for wavy areas, and repair as necessary.
3. Run a bead of sealer around the opening flange crevice and in the inner flange crevice of the weatherstrip. Apply rubber lube to the weatherstrip lip.
4. Install the weatherstrip on the glass, and install a draw cord in the weatherstrip flange slot, all around the glass, letting it overlap at the bottom center.
5. Position the windshield glass and weatherstrip in the windshield opening.
6. With a helper applying hand pressure from outside the cab, start at the bottom center from inside the cab and pull the weatherstrip lip over the windshield frame flange with the draw cord. Alternate from side to side, moving about 12 inches at a time, until the windshield is in place.
7. Install the wiper arms and blades.
8. Test for water leaks.

BACK WINDOW

W-SERIES

1. Unlock the weatherstrip around the entire perimeter of the back window (Fig. 6).
2. Working from inside the vehicle, push the back window from the weatherstrip and remove the window from the cab.
3. Remove the weatherstrip from the back window opening.

4. Apply rubber lube to the weatherstrip and insert the back window in the weatherstrip groove.
5. Lock the back window in the weatherstrip (Fig. 6) and clean the back window glass, weatherstrip, and body around the back window.
6. Test for water leaks.

F-SERIES

Removal

1. Remove the outside mouldings from the weatherstrip, if so equipped (Fig. 7).
2. Push the back window glass and weatherstrip out of the window opening from inside the cab.
3. Remove the weatherstrip from the glass and clean all sealer from the weatherstrip and/or glass, if either is to be re-used.
4. Clean all sealer from the back window opening.

Installation

1. Position the weatherstrip to the back window glass.
2. Install a draw cord all around the weatherstrip in the flange crevice, allowing the cord to overlap at the bottom center of the glass. Coat the weatherstrip mounting surface with rubber lube (19583).
3. Apply sealer to the back window opening as shown in Fig. 7.
4. Position the glass and weatherstrip to the window opening. With a helper applying hand pressure from outside the cab, pull the weatherstrip lip over the window opening flange with the draw cord. Pull the weatherstrip over the lower flange pulling one end of the cord at a time. Then, pull the seal over the side flanges and upper flange. Install the outside moulding.
5. Clean the glass and the area around the window to remove all excess sealer.
6. Test for water leaks.

L-AND C-SERIES

1. With a helper outside, loosen the weatherstrip (Fig. 8), and push the glass inward.
2. Remove the weatherstrip from the glass.
3. Clean the back window opening flange, and check the flange for wavy areas and repair as necessary.
4. Clean the weatherstrip with cleaning solvent to remove all the old sealer and cement.
5. Apply caulk and sealer in the glass crevice of the weatherstrip, and install it on the glass.
6. Run a bead of caulk and sealer around the opening flange and in the flange crevice in the weatherstrip.
7. Install a draw cord all around the weatherstrip in the flange crevice. Let the draw cord overlap at the bottom center. Apply rubber lube to the weatherstrip lip.
8. Position the glass assembly in the opening. With a helper applying hand pressure from the other side, draw the weatherstrip lip over the window opening lower flange, each side flange, and then over the upper flange.
9. Water test the installation for leaks. If leaks exist, apply additional caulk and sealer.
10. Clean the window and the surrounding area.

BRONCO

The following procedure applies to the liftgate window or the short or long roof rear window.

When removing or replacing one of the above windows, a helper must be employed to work outside the vehicle (Fig. 9).

Removal

1. Working from inside, start at one corner and work across the top of the glass, pulling the weatherstrip down and pushing the glass and weatherstrip outward until the helper can grasp the glass and lift it from the glass opening.
2. Remove the weatherstrip from the glass.

Installation

1. Clean the weatherstrip with cleaning solvent to remove all old sealer and cement.
2. Clean the glass opening flange on the weatherstrip, check the flange for wavy areas, and repair as necessary.
3. Apply sealer in the glass crevice of the weatherstrip and install it on the glass.
4. Run a bead of sealer around the opening flange crevice and in the inner flange crevice of the weatherstrip.

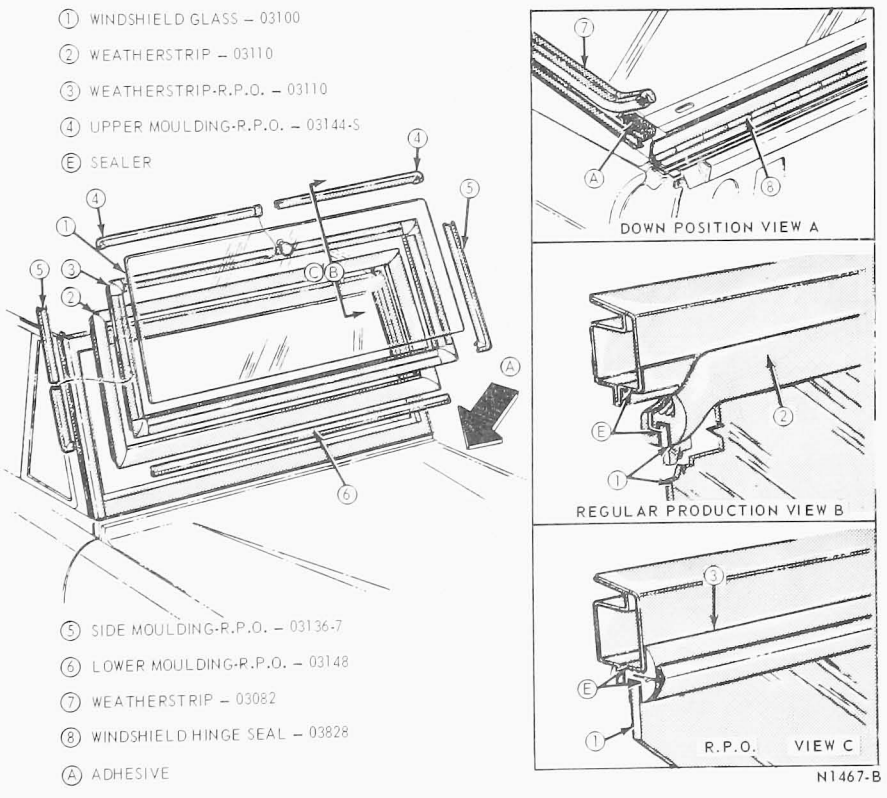

FIG. 5 Windshield Installation—Bronco

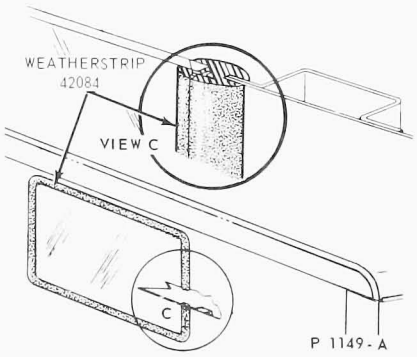

FIG. 6 Back Window Installation—W-Series

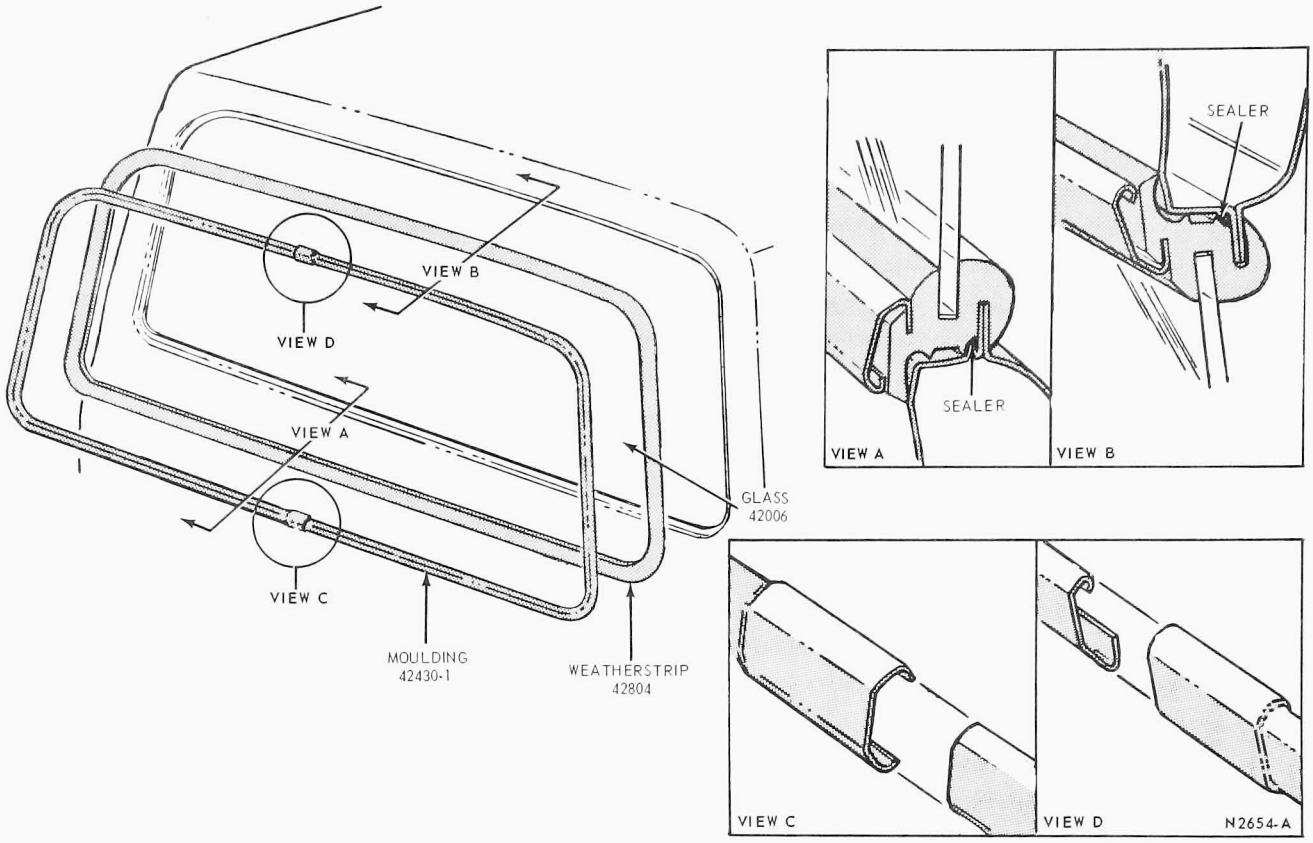

FIG. 7 Stationary Back Window Glass Installation—F-Series

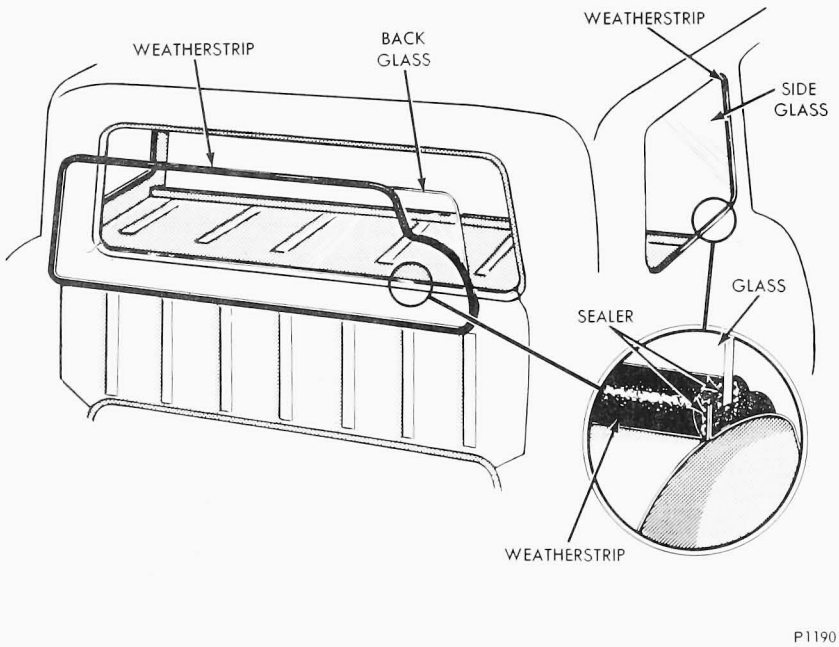

FIG. 8 Back Window Glass Installation—C-Series Shown— L-Series Typical

5. Install a draw cord all around the weatherstrip in the flange crevice. Let the draw cord overlap at the bottom center. Apply rubber lube to the weatherstrip lip.
6. Have a helper position the window assembly in the window opening and apply hand pressure on the glass. From the inside, draw the lip of the weatherstrip over the window opening lower flange with a draw cord. Alternate from side to side, moving about 12 inches at a time, until the window is in place.
7. Water test the installation for leaks, and seal with additional caulk and sealer if necessary.

QUARTER WINDOW GLASS

BRONCO

The following procedure is for replacement of the long roof side window glass.

When removing or replacing the glass, a helper must be employed to work outside the vehicle.

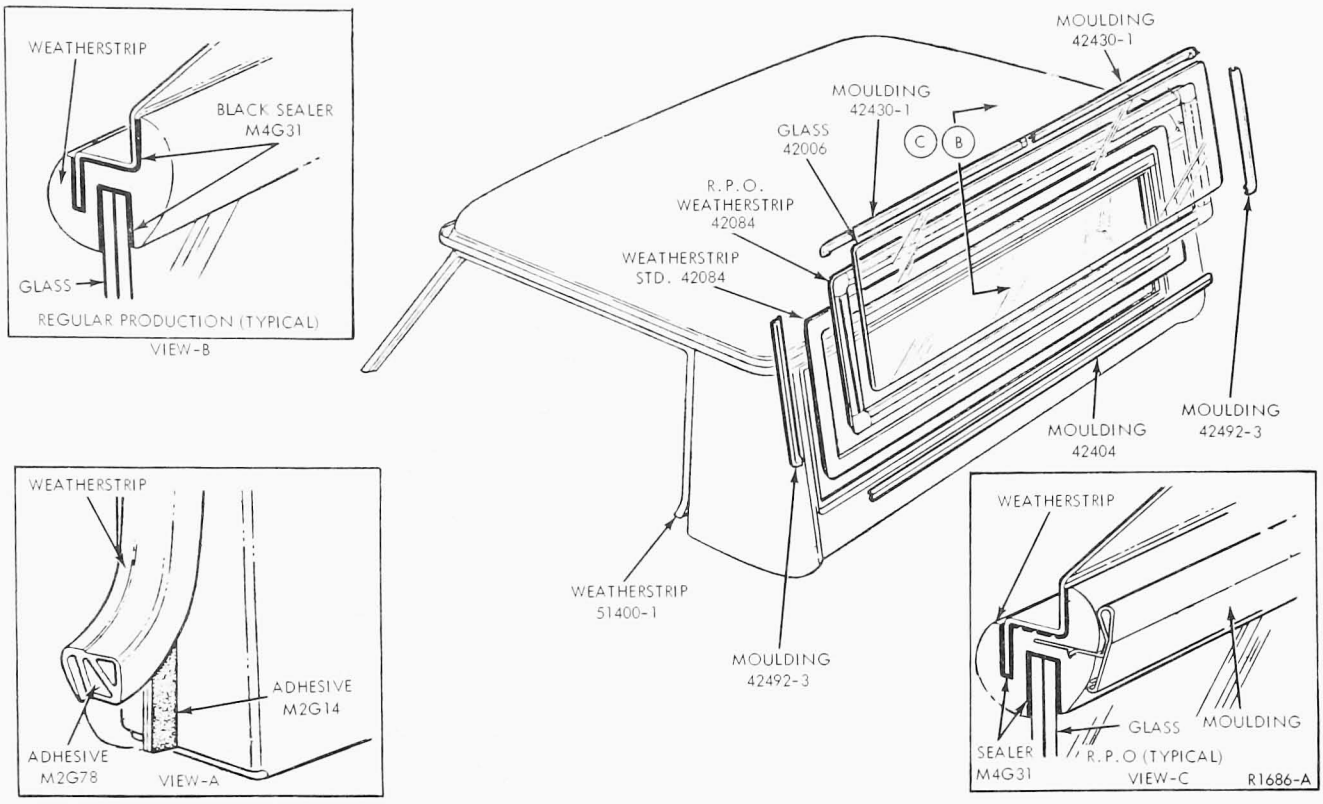

FIG. 9 Back Window Glass Installation—Bronco

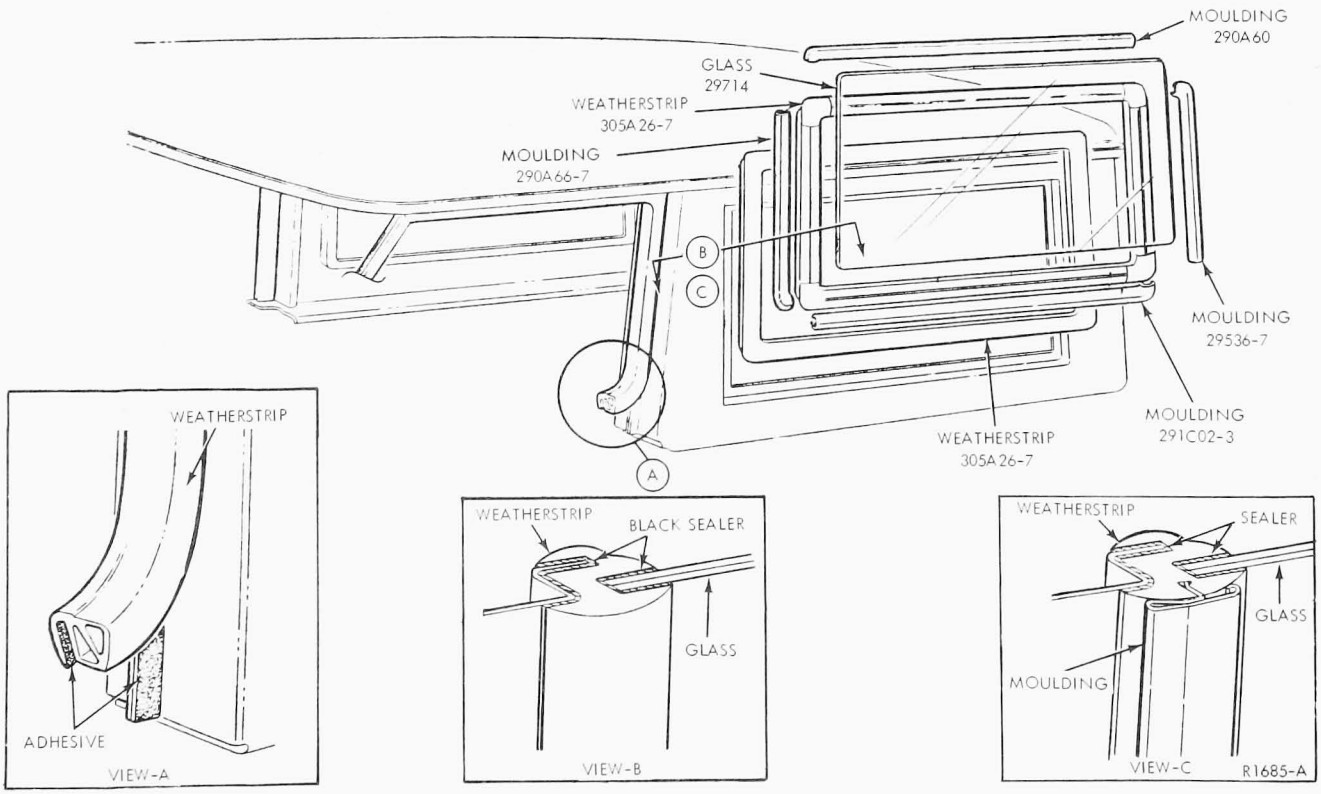

FIG. 10 Quarter Window Installation—Bronco

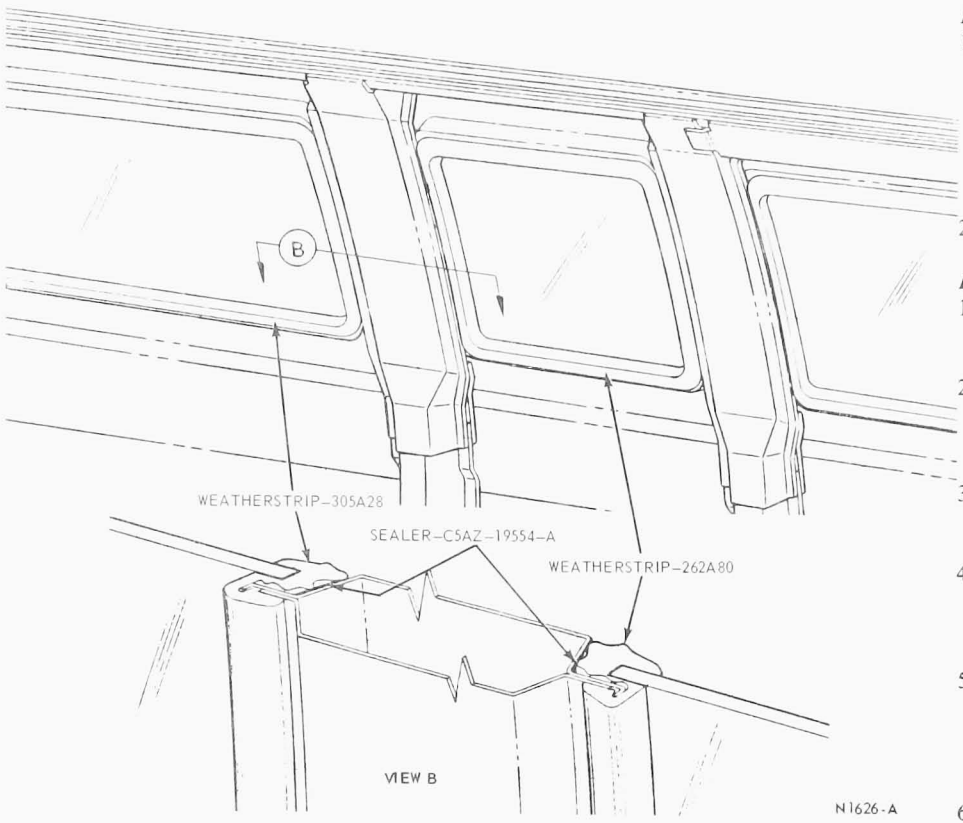

FIG. 11 Body Side and Rear Stationary Window Installation—Econoline

Removal

1. Working from inside, start at one corner and work across the top of the glass, pulling the weatherstrip down and pushing the glass and weatherstrip outward until the helper can grasp the glass and lift it from the glass opening.
2. Remove the weatherstrip from the glass (Fig. 10).

Installation

1. Clean the weatherstrip with cleaning solvent to remove all old sealer and cement.
2. Clean the glass opening flange on the weatherstrip, check the flange for wavy areas, and repair as necessary.
3. Apply sealer in the glass crevice of the weatherstrip and install it on the glass.
4. Run a bead of sealer around the opening flange crevice and in the inner flange crevice of the weatherstrip. See Fig. 10.
5. Install a draw cord all around the weatherstrip in the flange crevice. Let the draw cord overlap at the bottom center. Apply rubber lube to the weatherstrip lip.
6. Have a helper position the window assembly in the window opening and

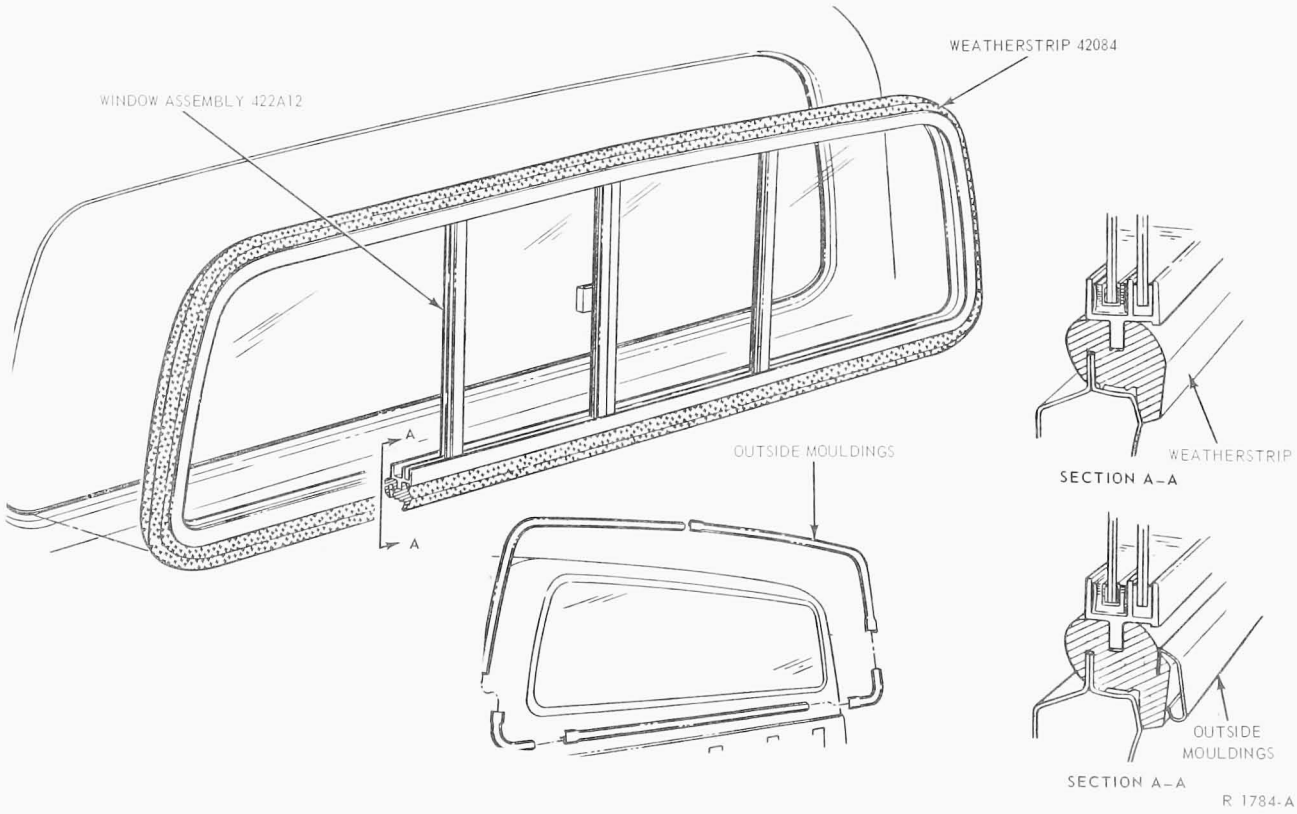

FIG. 12 Movable Back Window—F-100 through F-750, 6000 and 7000

apply hand pressure on the glass. From the inside, draw the lip of the weatherstrip over the window opening lower flange with a draw cord. Alternate from side to side, moving about 12 inches at a time, until the window is in place.

7. Water test the installation for leaks, and seal with additional caulk and sealer if necessary.

BODY SIDE AND REAR WINDOW GLASS

ECONOLINE

1. Loosen the weatherstrip around the inside and outside of the window opening.
2. From the inside of the vehicle, push the glass and weatherstrip from the window opening.
3. Remove the weatherstrip from the glass.
4. Clean the weatherstrip and body opening to remove all old sealer.
5. Apply sealer (C5AZ-19554-A) in the glass groove of the weatherstrip (Fig. 11).
6. Apply sealer (C5AZ-19554-A) around the entire perimeter of the window opening.
7. Position the weatherstrip to the window glass. Install a draw cord in the pinch weld opening of the weatherstrip. Overlap the cord about 18 inches at the lower center of the glass and tape the ends of the cord to the inside of the glass.
8. Position the window glass and weatherstrip to the body opening.
9. With an assistant applying hand pressure from the outside, pull the draw cord to pull the lip of the weatherstrip over the window opening flange. Draw the weatherstrip over the lower flange, each side flange, and then over the upper flange.
10. Clean the glass, weatherstrip, and surrounding area to remove all excess sealer.
11. Test for water leaks.

MOVABLE BACK WINDOW

F-100 THROUGH F-750, 6000 AND 7000

Removal

1. Remove the outside moulding from the weatherstrip, (if so equipped).
2. Push the back window and weatherstrip out of the window opening from inside the cab.
3. Remove the weatherstrip from the window and place the movable windows in the open position.
4. From the bottom of the window frame, remove the screw retaining each division bar. Also, remove the two screws retaining the anchor plate in the window track and remove the plate.
5. Spread the window frame and work the movable glass out of its track, and remove it from the frame.
6. If the stationary glass is to be replaced, remove the division bar top retaining screw and remove the division bar.
7. Spread the window frame just enough to permit the stationary glass to be worked out of the frame.

Installation

1. If the stationary glass is to be replaced, apply Lubricant (19558) to the window weatherstrip and track. Spread the frame slightly and slide the glass into place, in the frame. Do not allow the weatherstrip to bunch.
2. Position the division bar in the frame and install the top retaining screw.
3. Spread the frame slightly and install the movable glass in its track.
4. Position the anchor plate in the window track ad install the two retaining screws.
5. Install the division bar lower retaining screws.
6. Position the weatherstrip to the window frame.
7. Install a draw cord all around the weatherstrip in the flange crevice, allowing the cord to overlap at the bottom center of the glass.
8. Apply sealer to the back window opening as shown in Fig. 12.
9. Position the glass and weatherstrip to the window opening. With an assistant applying hand pressure from outside the cab, pull the weatherstrip lip over the window opening flange with a draw cord. Pull the weatherstrip over the lower flange, pulling one end of the cord at a time. Then, pull the seal over the side flanges and upper flange. Install the outside mouldings (if so equipped).

Doors, Hood and Tailgate

GROUP 44

PART 44-01	PAGE	PART 44-21	PAGE
Doors, Hood and Tailgate—General Service	44-01-01	Hood and Hinges	44-21-01
PART 44-06		**PART 44-31**	
Doors, Hinges, Checks and Weatherstrips	44-06-01	Hood Latch	44-31-01
PART 44-08		**PART 44-86**	
Sliding Door	44-08-01	Tailgate—Bronco and Pick-up	44-86-01
PART 44-11		**PART 44-92**	
Door Latches and Locks	44-11-01	Liftgates, Hinges and Weatherstrip—Bronco	44-92-01

PART 44-01 Doors, Hood and Tailgate-General Service

GENERAL INFORMATION

DOOR AND WEATHERSTRIP LUBRICANT

SILICON LUBRICANT COAZ-19553-A (JELLY) AND COAZ-19533-C (SPRAY)

This lubricant is to be used on the door and window weatherstrips. It is recommended that silicon lubricant be applied to the upper weatherstrips at every regular lubrication period. Its use makes the doors easier to close, avoids weatherstrip squeaks, retards excess weatherstrip wear from chafing between the door glass upper frame and the weatherstrip. Also, it helps to retain door window alignment by reducing friction between the glass frame and the rubber weatherstrip.

DOOR, HOOD AND TAILGATE HINGES—LUBRICANT

POLYETHYLENE GREASE C4AZ-19584-B

This lubricant is used to lubricate door hinges. Apply an even coat to all movable hinge surfaces when a binding condition occurs (Fig. 1).

LOCK CYLINDER LUBRICANT

LOCK LUBRICANT B4A-19587-A

This lubricant is used to eliminate sticking or binding of all key lock cylinders.

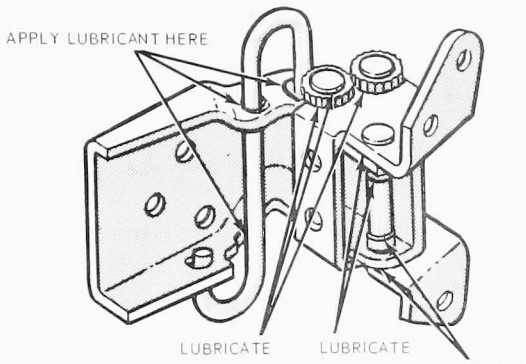

UPPER F-SERIES
SHOWN – LOWER TYPICAL

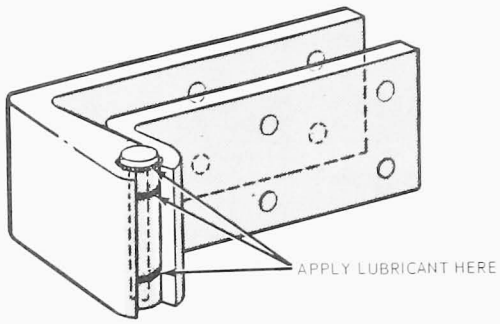

TYPICAL DOOR HINGE
BRONCO, ECONOLINE AND L-SERIES

N1897-B

FIG. 1 Door Hinge Lubrication—Typical

PART 44-06 Doors, Hinges, Checks and Weatherstrips

COMPONENT INDEX Applies to Models as Indicated	All Models	Bronco	Econoline	F-Series	L-Series	C-Series	W-Series
ADJUSTMENTS							
Door Alignment		06-01	06-01	06-02	06-01	06-01	
Hinged Cargo Door Alignment			06-02				
REMOVAL AND INSTALLATION							
Door		06-04	06-04	06-04	06-04	06-04	06-05
Hinge		06-04		06-04	06-04		06-05

A page number indicates that the item is for the vehicle(s) listed at the head of the column.
N/A indicates that the item is not applicable to the vehicle(s) listed.

ADJUSTMENTS

DOOR ALIGNMENT

BRONCO AND C-SERIES

The door hinges provide sufficient adjustment to correct most misalignment conditions. The elongated holes where the hinges attach to the pillars provide in and out movement of the door to obtain flush fits with the cowl side panel (Fig. 1). On Bronco models, fore and aft movement of the door can be achieved by the insertion or removal of shims between the door hinges and the door pillar. **Do not try to correct door misalignment by adjusting the striker.**

The bolt holes where the doors attach to the hinges are enlarged (Fig. 1). This permits a circular movement of the door to obtain proper spacing all around it.

1. Determine which hinge bolts must be loosened to move the door in the desired direction.
2. Loosen the hinge bolts enough to permit movement of the door with a padded pry bar.

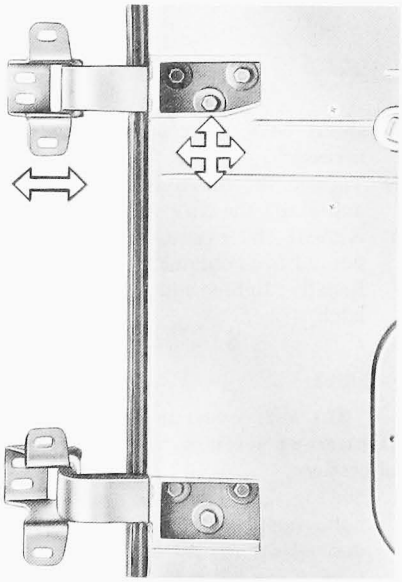

FIG. 1 Door Hinge Adjustment—Typical Except W and F-Series

3. Move the door the distance estimated to be necessary.
4. Tighten the hinge bolts, and check the door fit.
5. Repeat the operation until the desired fit is obtained.

L-SERIES

The door hinge attachments to the door and pillar provide a means for adjusting the door position in the door opening. Elongated bolt holes in the door provide the in-out adjustment. Enlarged square bolt holes in the door pillar (Fig. 2) provide circular adjustment of the door. This adjustment gives the proper up-down and fore-aft position. To reach the door pillar bolts, it is necessary to remove the cowl side panel and hood latch from the cab.

ECONOLINE

The door hinge attachment to the door and body pillar provides a means for adjusting the door in the body opening. This is accomplished by enlarged hinge bolt holes in the door and pillar. A floating hinge reinforcement plate, threaded to accept the hinge bolts,

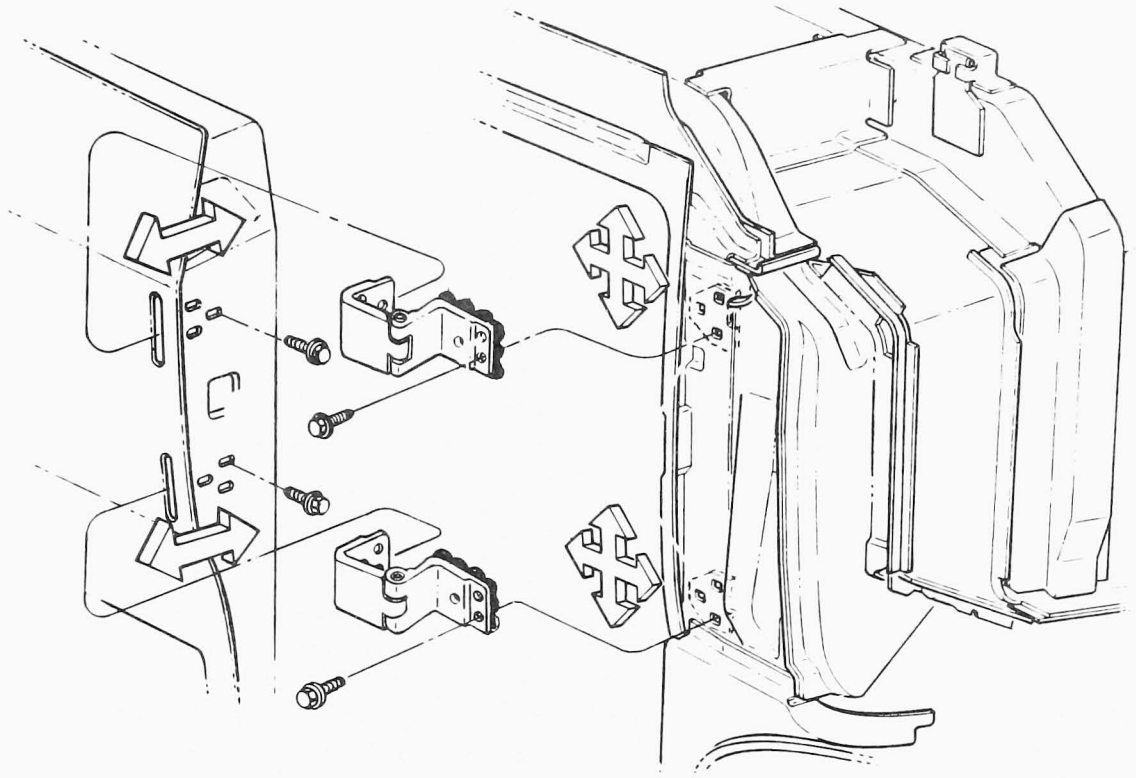

N1898-A

FIG. 2 Door Hinge—L-Series

is used to attach the upper hinge to the pillar (Fig. 3). The lower hinge is attached to the pillar by threaded holes in the hinge. The hinges are attached to the door in the same way.

The upper hinge can be adjusted up or down and in or out by loosening the hinge attaching screws and moving the hinge. Fore and aft movement of the hinge is accomplished by adding or removing shims between the hinge and the pillar (Fig. 3).

The lower hinge can be adjusted up or down and fore or aft by loosening the hinge-to-pillar attaching screws and moving the hinge. In or out movement of the lower hinge is provided at the hinge-to-door attachment.

1. Loosen or remove the door latch striker to prevent interference during door alignment.
2. Loosen the hinge attaching bolts enough to permit movement of the door with a padded pry bar.
3. Move the door the distance estimated to be necessary to obtain a proper fit.
4. If it is necessary to move the door forward or rearward, add or remove shims behind the upper hinge as necessary.
5. Tighten the hinge attaching bolts, and check the door fit.
6. Repeat the operation until the desired fit is obtained.
7. Install or tighten and adjust the door latch striker.

F-SERIES

Do not cover up a poor door alignment with a latch striker adjustment.

1. See Fig. 4, to determine which hinge bolts must be loosened to move the door in the desired direction.
2. Loosen the hinge bolts just enough to permit movement of the door with a padded pry bar.
3. Move the door the distance estimated to be necessary. Tighten the hinge bolts and check the door fit, to be sure there is no bind or interference with the adjacent panel.
4. Repeat the operation until the desired fit is obtained, and check the striker plate alignment for proper door closing.
5. Repeat the operation until the desired fit is obtained.

HINGED—CARGO DOOR ALIGNMENT

ECONOLINE

The door hinge attachment to the door and body provide a means for adjusting the doors in the body opening. Up or down and in or out adjustment is accomplished by enlarged holes at the hinge-to-door attachment (Fig. 5). Side to side movement of the doors is provided by adding or removing shims between the hinge and the body except on the front side cargo door. **The hinges of the front side cargo door should not be shimmed.**

The cargo doors should be adjusted to obtain a proper fit. After the doors have been adjusted, tighten the hinge attaching bolts securely, and adjust the latch mechanisms if required.

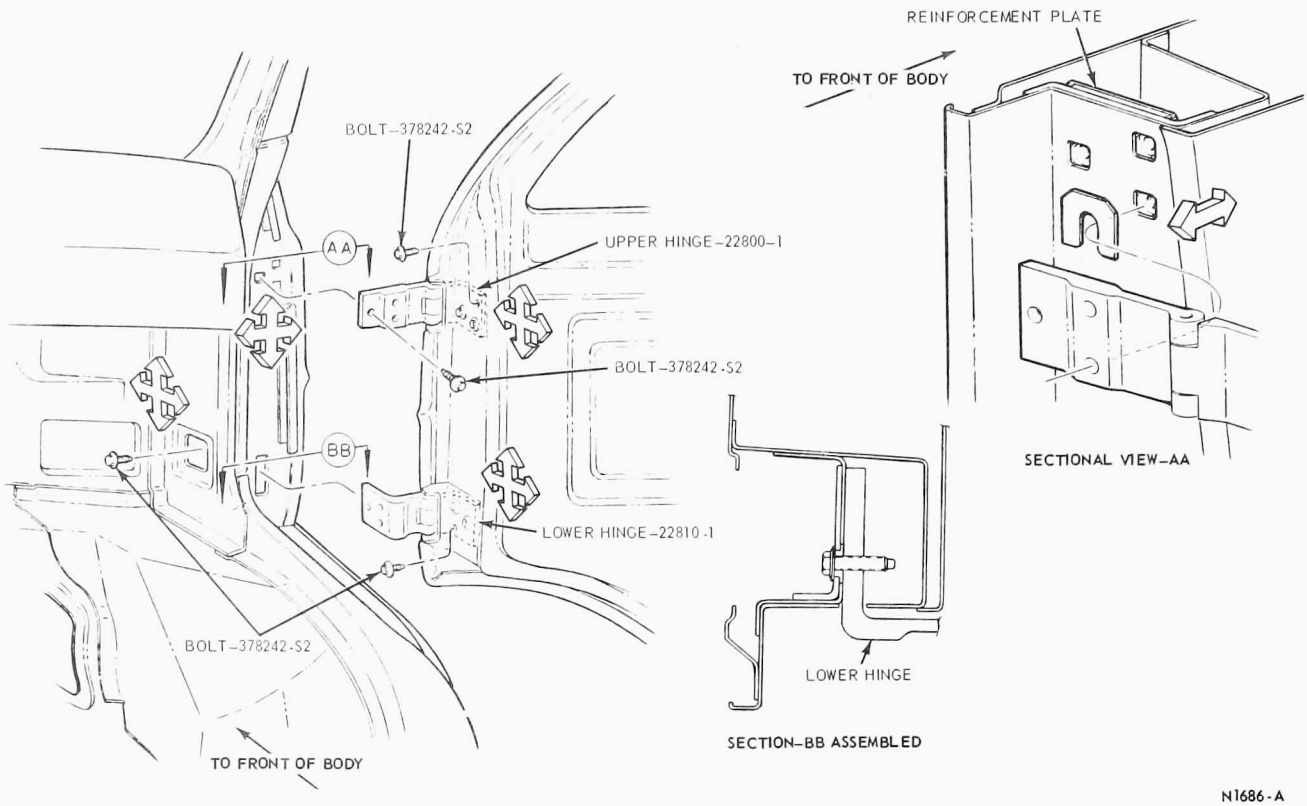

FIG. 3 Front Door Adjustment—Econoline

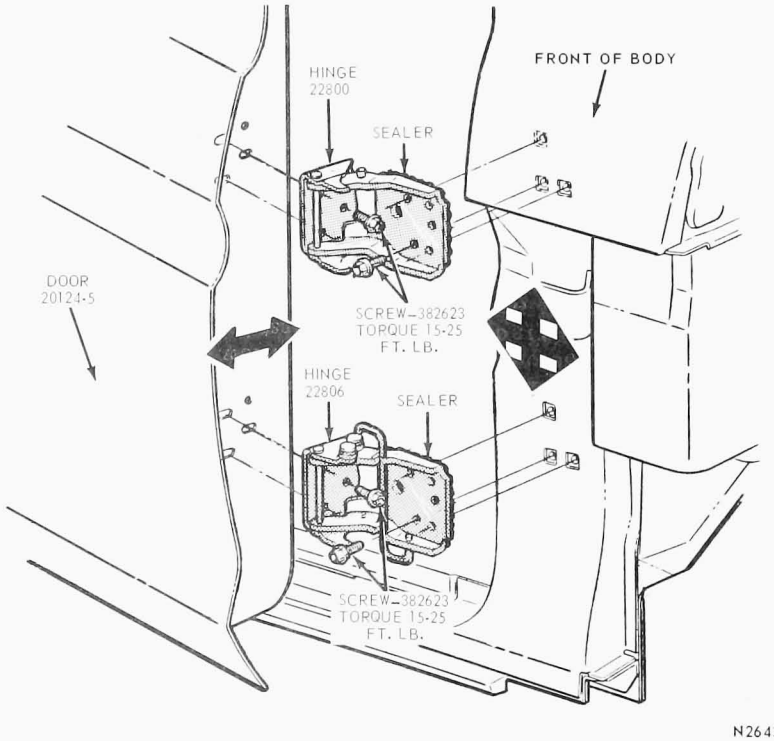

FIG. 4 Door Hinge Adjustment—F-Series

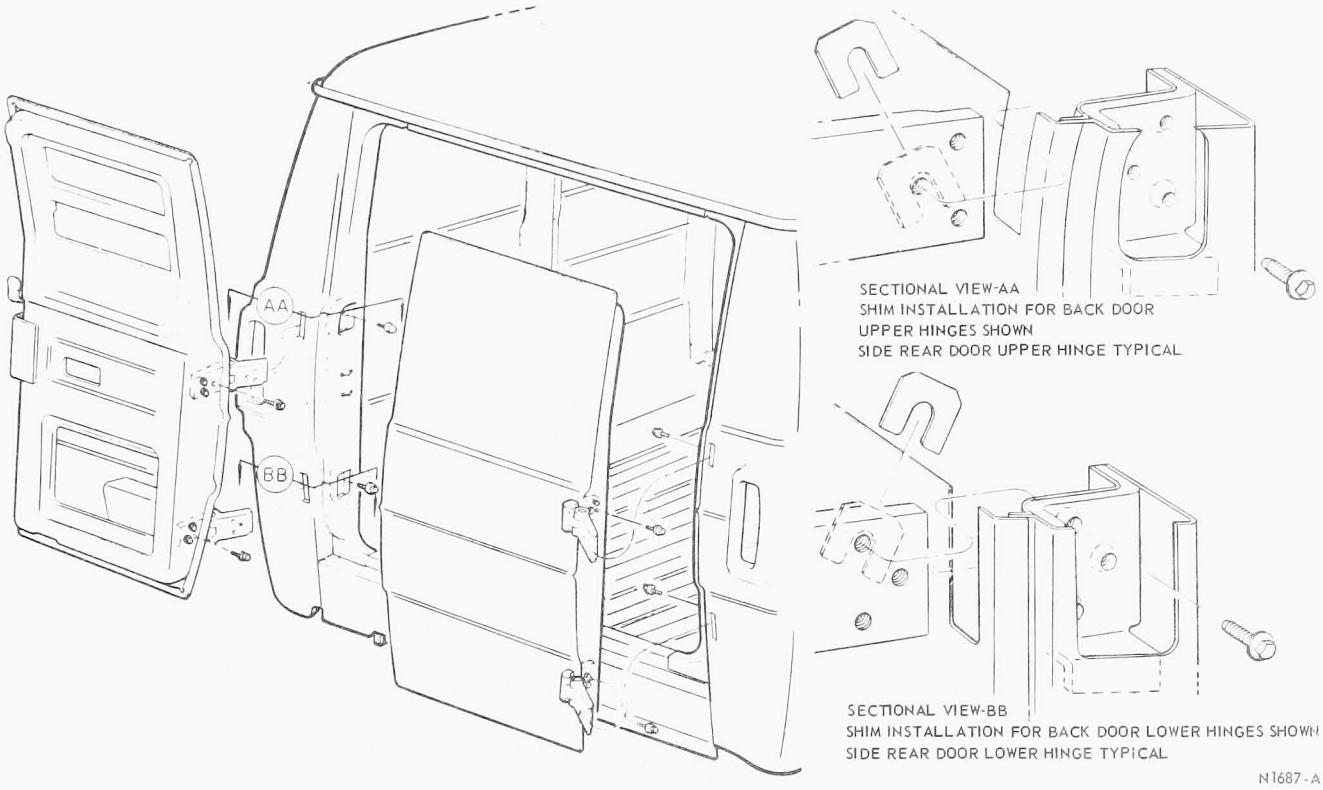

FIG. 5 Cargo and Back Door Alignment—Econoline

REMOVAL AND INSTALLATION

DOORS

Except W-Series

1. Remove all usable hardware, trim, and glass parts.
2. Remove the upper and lower hinge access hole cover plates (if so equipped).
3. Remove the door to lower hinge retaining bolts.
4. Support the door, and remove the door to upper hinge retaining bolts. Slide the door off the hinges.
5. If a hinge is to be replaced, remove the hinge to pillar bolts, and remove the hinge.
6. Cement the door weatherstrip in proper position on the door. Include the belt seals.
7. If a hinge has been removed, install the hinge in the pillar in approximately the same position as the removed hinge.
8. Position the door on the hinges, and install the retaining bolts snug.
9. Install the lock mechanism. Install the glass mechanism, glass, and vent window assembly. Make all necessary adjustments as these assemblies are installed.
10. Adjust the door, and tighten all hinge bolts securely. To provide a good weatherstrip seal, the upper front edge of the door must be 3/16 inch inboard of the upper part of the pillar from the belt line to a point near the top of the door. Adjust the striker plate.
11. If the truck is so equipped, install the water shield. The top edge should be cemented to the inside surface of the inner panel.
12. Install the hinge access hole cover plates and the door access hole cover plate.

DOOR HINGE

Bronco, and L-Series

1. Open the door and remove the trim panel from the door.
2. Remove the attaching bolts from the upper and lower hinges and remove the door from the vehicle.
3. Remove three bolts attaching the hinge to the body pillar and remove the hinge.
4. Position the new hinge to the body and install the three attaching bolts snug but do not tighten.
5. Position the door to the hinges and install the three attaching bolts in each hinge. Do not tighten the hinge attaching bolts at this time.
6. Position the door in the body opening and tighten the hinge attaching bolts. Then, adjust the door latch striker.

DOOR HINGE

F-Series

1. Support the door.
2. Mark the location of the hinge on the door and body.
3. Remove the hinge-to-body attaching bolts.
4. Remove the hinge-to-door attaching bolts and remove the hinge.
5. Position the hinge to the door and body, and install the attaching bolts.

6. Adjust the door and hinges and remove the support.

DOOR AND/OR HINGE

W-SERIES

Removal

1. Mark the location of the hinge on the pillar post.
2. Support the door and remove seven screws attaching the check strap to the door.
3. Remove ten bolts and washers attaching the hinge to the pillar post and remove the door and hinge from the cab.
4. Remove the weatherstrip from the door frame.
5. Remove eleven bolts and washers attaching the hinge to the door frame and remove the hinge.

Installation

1. Position the hinge to the door and install the eleven attaching bolts and washers.
2. Apply rubber cement to the weatherstrip and door frame and position the weatherstrip in place.
3. Position the door and hinge to the body and install the attaching bolts and washers.
4. Adjust the door to fit the door opening and tighten the hinge attaching bolts.
5. Position the check strap to the door and tighten the attaching screws.

DOOR WEATHERSTRIPS

A typical door weatherstrip installation is shown in Fig. 6. Remove the weatherstrip, clean all old weatherstrip adhesive and apply new adhesive (Part Number 19552) to the retaining flanges. Then, install the weatherstrip.

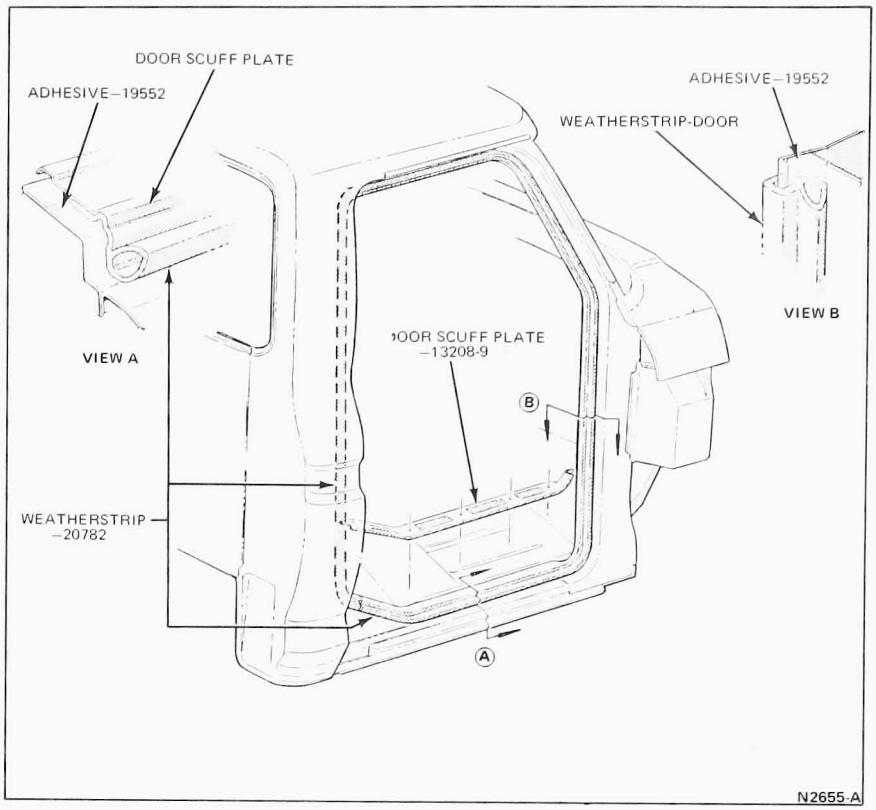

FIG. 6. Typical Door Weatherstrip Installation

PART 44-08 Sliding Door

Applies To Econoline Only

COMPONENT INDEX	Page	COMPONENT INDEX	Page
ADJUSTMENTS		DESCRIPTION AND OPERATION	08-01
Fore and Aft – Door	08-03	REMOVAL AND INSTALLATION	
Center Hinge Check	08-03	Hinge	08-06
Front Striker	08-03	Latch	
Latches	08-03	Front	08-05
Lower Check	08-03	Rear	08-06
Hinge Assembly	08-01	Lower Guide Assembly	08-05
In or Out – Door	08-01	Striker Plate	08-06
Striker – Rear Latch	08-03	Upper Bracket and Roller Assembly	08-05
Up or Down – Door	08-01	Weatherstrip	08-06

DESCRIPTION AND OPERATION

SLIDING DOOR

The door is operated by rotating the inside or outside handle (inside-rearward or outside-downward) to release the latch and sliding the door rearward to the full open position. When the door has been pushed fully rearward, the hold-open check will activate and thereby prevent the door from inadvertently closing. There are no intermediate hold-open positions. To close the door, the inside or outside handle must be activated (inside-forward or outside-upward) to release the door from the check position.

From the inside of the vehicle, the door can be locked by pushing down on the lock knob and cannot be opened unless the lock knob is in the up position. Locking or unlocking the door from the outside can be accomplished with the key only. Since the floor pan sheet metal design incorporates an integral side step in vehicles equipped with the sliding door, no movable auxiliary side step is required.

ADJUSTMENTS

SLIDING DOOR—IN OR OUT

UPPER ROLLER ASSEMBLY

To adjust the upper edge of the door, loosen the upper roller retaining nut and move the roller **in or out,** to obtain a flush fit with the body sheet metal at the top edge of the door (Figs. 1 and 2).

LOWER-GUIDE ASSEMBLY

Support the door assembly so that **no up or down** movement can be made to the door when performing the **in or out** adjustment.

To adjust the lower front edge of the door, loosen the retaining screws on the guide assembly and move the guide assembly **forward,** to obtain a snug fit to the body and **rearward** to move it away from the body, at the B pillar post (Fig. 1).

SLIDING DOOR—UP OR DOWN

UPPER ROLLER AND LOWER GUIDE ASSEMBLY

To move the front edge of the door up or down, loosen the three lower guide attaching screws (Fig. 3), then rotate the guide at the lower attaching screw to obtain the desired door **up or down** position.

If further adjustment is required to obtain the desired fit, loosen the upper roller bracket assembly attaching screws and adjust the bracket so that the bottom edge of the roller assembly is approximately 1/16 inch from the bottom flange of the upper track.

HINGE ASSEMBLY

To move the rear edge of the door **up or down,** remove the door trim panel and/or plug buttons (if so equipped) (Fig. 7). With the door in the open position, loosen the hinge assembly attaching screws (Fig. 1) and move the

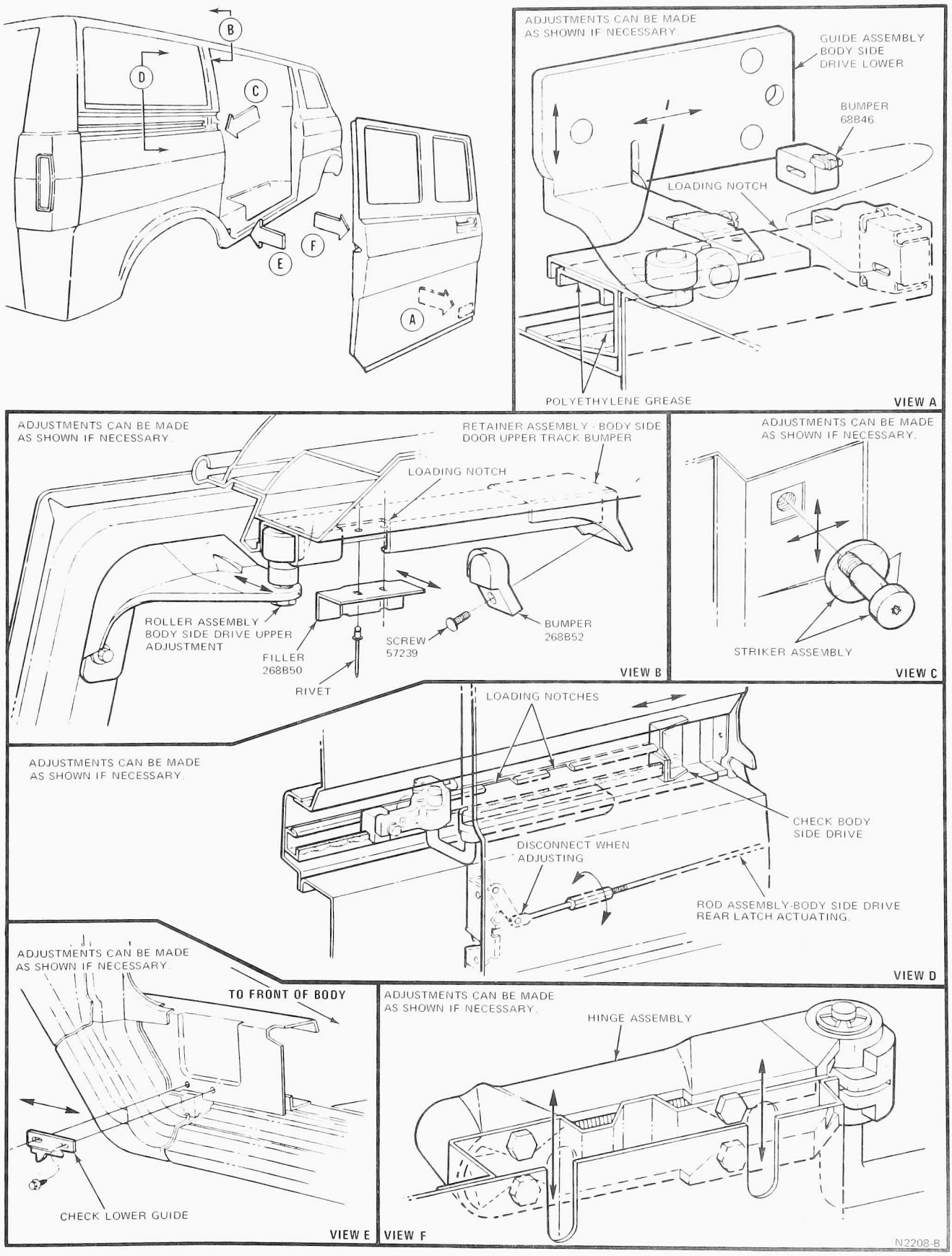

FIG. 1 Sliding Door Adjustments—Econoline

hinge assembly **up or down** to obtain the desired door position.

STRIKER—REAR LATCH

The rear latch striker assembly can be adjusted **up or down** and **in or out** . Loosen and adjust the striker, to obtain proper adjustment with the rear latch assembly (Fig. 1).

SLIDING DOOR—FORE AND AFT

CENTER HINGE CHECK AND FRONT STRIKER

To gain access to the hinge check, remove the interior stationary quarter glass garnish moulding. See Part 45-11 for garnish moulding removal. This will expose the nuts retaining the center track shield (five nuts short wheelbase vehicle) and (six nuts long wheelbase vehicle). Remove the nuts from inside the vehicle and the remaining two screws holding the center track shield from outside the vehicle. Then, remove the center track shield (Figs. 1 and 2).

Loosen the three bolts at the hinge check. **These bolts must be kept loose when making the fore and aft adjustment.** Then remove the B pillar post trim panel (nine screws). Loosen the (two) striker bolts and remove the striker (Fig. 2). Then, fit the door to the opening and adjust the door check (Fig. 2), so that it is fully engaged with the upper hinge lever and the check bumper is firmly depressed with the hinge casting.

Install the front striker assembly and add or remove shims to obtain the proper operation of the front latch assembly.

LOWER CHECK

The lower check holds the sliding door assembly in the full open position (Fig. 2). Loosen the two screws and push the door so that the lower guide roller is firmly against the overslam bumper. Adjust the check so that it is engaged with the edge of the hold-open stop and tighten the attaching screws.

SLIDING DOOR—LATCHES

Remove the sliding door trim panel. For trim panel removal, see Group 45.

The front and rear latch assembly adjustments are made with the rear latch actuating rod assembly (Figs. 5 and 6). Set the front latch in the latched position (one click of the latch mechanism) and the rear latch to the secondary position (one click of the latch mechanism). Then, disconnect the retainer at the rear latch assembly (Fig. 6) and adjust the sleeve and actuating rod to match the pivot arm on the latch. Connect the retainer to the rear latch assembly and check the door for proper latching.

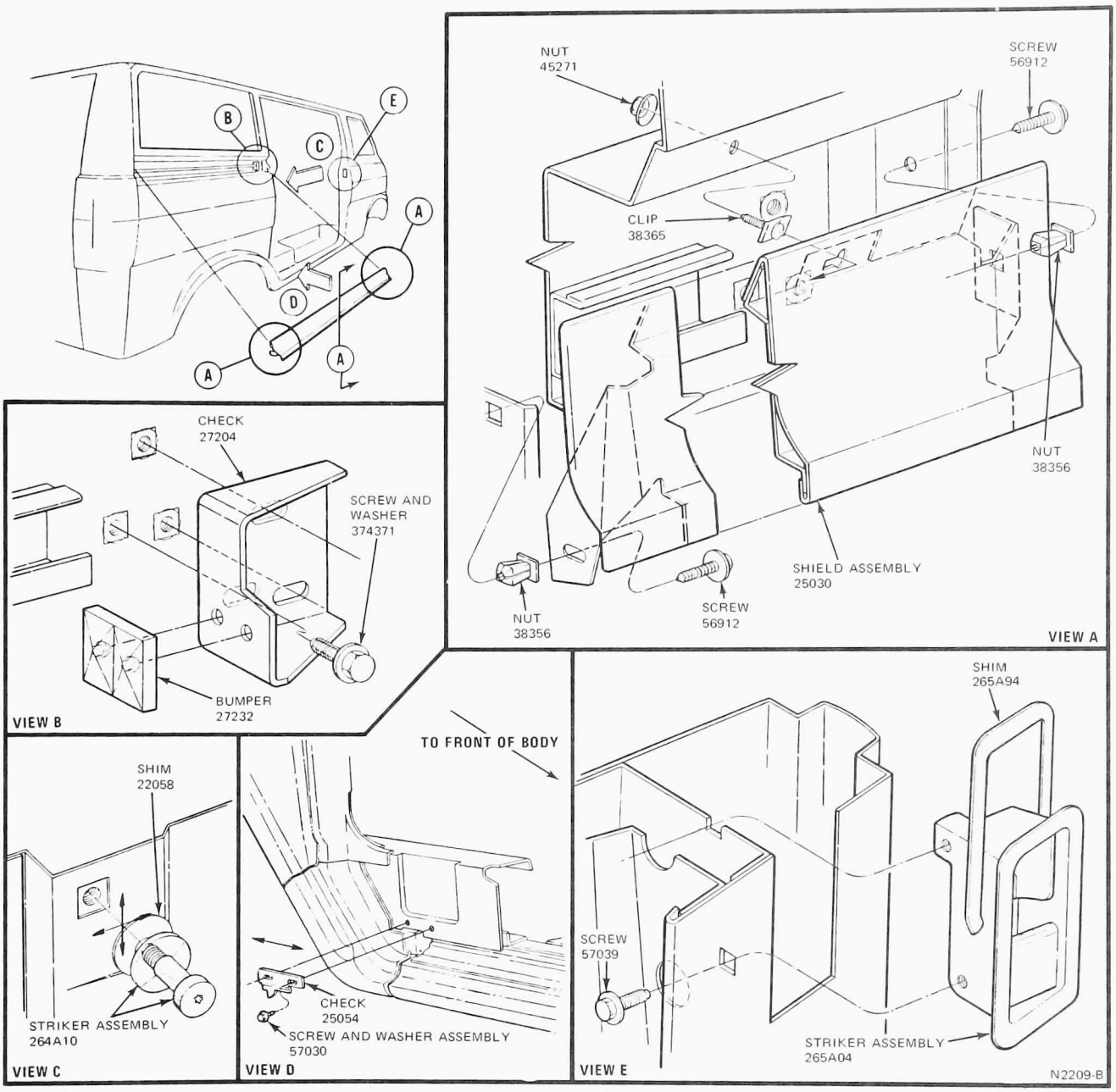

FIG. 2 Sliding Door Adjustments—Econoline

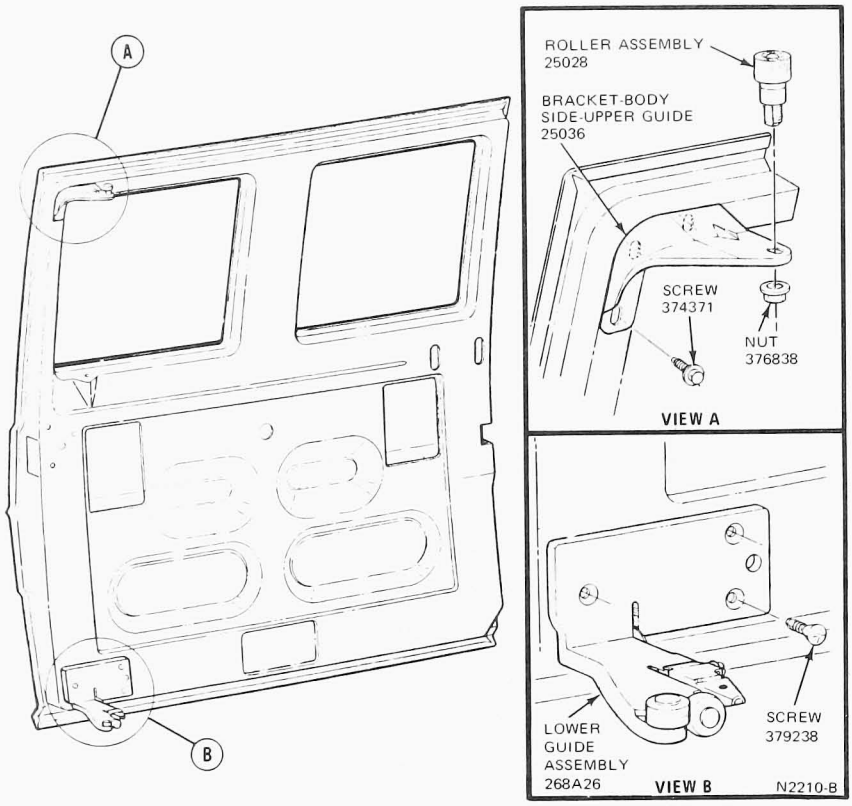

FIG. 3 Sliding Door—Guides and Rollers— Econoline

REMOVAL AND INSTALLATION

UPPER BRACKET AND ROLLER ASSEMBLY

1. Remove the upper garnish moulding, open and support the door.
2. Mark the location of the upper bracket assembly to the door (Fig. 3).
3. Remove the screws retaining the bracket and roller assembly and remove the assembly from the door, through the opening at the front of the upper track (Fig. 1).
4. If a new bracket is being installed, transfer the roller assembly to the new bracket.
5. Position the bracket and roller assembly to the door and install the three retaining screws (Figs. 1 and 3).
6. See Adjustment procedures outlined in this Section.

LOWER GUIDE ASSEMBLY

1. Open and support the door.
2. Remove the lower guide check screws and remove the check.
3. Slide the door forward on the support, to gain access to the lower guide attaching screws.
4. Mark the location of the lower guide bracket to the door (Fig. 1). and remove the guide attaching screws. **To gain access to the stop actuating rod retainer assembly (Figs. 3 and 5), rotate the guide assembly 90 degrees.** Then, disconnect the stop actuating rod from the stop and remove the guide assembly.
5. Connect the rod to the new lower guide stop arm and secure the retainer.
6. Position the guide assembly to the door and install the retaining screws.
7. Rotate the inside door handle forward to insure proper releasing action of the stop.
8. Install the lower guide check to the body and adjust the check as described under (Adjustments).

DOOR LATCH—FRONT

1. Note the position of the inside door handle before removing the trim panel (if so equipped).
2. **Do not remove the outside door handle screw.** Remove the outside door handle retainer and remove the handle and serrated shaft as an assembly (Fig. 4) from the door.
3. Remove the sleeve attaching screws and remove the sleeve (Fig. 4) from the latch.
4. Remove the rear latch actuating rod assembly from the rear latch (Fig. 6).
5. Remove the door lock rod from the lock cylinder and disengage it from the latch lever arm (Fig. 5).
6. Remove the stop actuating rod from the front latch.
7. Remove the three front latch retaining screws and disconnect the rear latch actuating rod from the latch.
8. Remove the front latch assembly through the access hole in the door.
9. Position the new latch assembly in the access hole opening and connect the rear latch actuating rod to the front latch.
10. Position the latch to the door and install the three retaining screws.
11. Connect the stop actuating rod to

the front latch.
12. Position the push button lock rod through the latch lever and connect the lock rod to the lock cylinder.
13. Position the sleeve to the latch assembly and install the retaining screws (Fig. 4).
14. Insert the outside handle assembly into the latch and install the handle retaining clip.
15. Connect the rear latch actuating rod to the rear latch assembly. **The front latch must be in the full latched position and the rear latch must be in the secondary position before connecting the rear latch actuating rod to the rear latch assembly.**
16. Check for proper latching operation before installing the door trim panel, escutcheon and inside door handle.

DOOR LATCH—REAR

1. Remove the door trim panel. (See Group 45).
2. Disconnect the actuating rod and retainer from the rear door latch arm (Fig. 6).
3. Remove the three latch retaining screws and remove the latch from the door.
4. Position the new latch assembly into the door and install the three retaining screws.
5. Connect the actuating rod and retainer to the door latch arm. **The front latch must be in the full latched position and the rear latch must be in the secondary position before connecting the actuating rod and retainer to the door latch arm.**
6. Check the latch operation and then, install the door trim panel. Refer to Adjustments if necessary.

DOOR HINGE ASSEMBLY

1. Open and support the door assembly.
2. Remove the center track shield as outlined in (Adjustments).
3. Remove the door trim panel and/or access hole covers (if so equipped).
4. Mark the position of the hinge assembly to the door and remove the four retaining screws from the hinge.
5. Slide the hinge assembly to a position in line with the loading notches located in the center track (Fig. 1) and remove the hinge assembly. A dissembled view is shown in Fig. 8.
6. Install the new hinge assembly through the loading notches in the center track and position the hinge to the door.
7. Install the hinge retaining screws and check the operation of the door.
8. Then, install the trim panel and/or access hole covers.
9. Install the center track shield.

WEATHERSTRIPS

1. Remove the weatherstrip from the door (Fig. 7).
2. Remove all the old weatherstrip adhesive
3. Apply adhesive to the cleaned area.
4. Install the weatherstrip (cut to length and butt the ends together).

STRIKER PLATE—FRONT DOOR

1. Remove the front roof rail moulding screws (Four) and position the moulding tip on the visor.
2. Remove the B pillar trim panel screws (nine).
3. Remove the striker bolts (two) and transfer the shim(s) to the new striker.
4. Position the striker and install the two attachiing bolts (snug) then, adjust as necessary.
5. Install the B pillar trim panel (nine screws).
6. Install the roof rail moulding and support assembly (four screws).

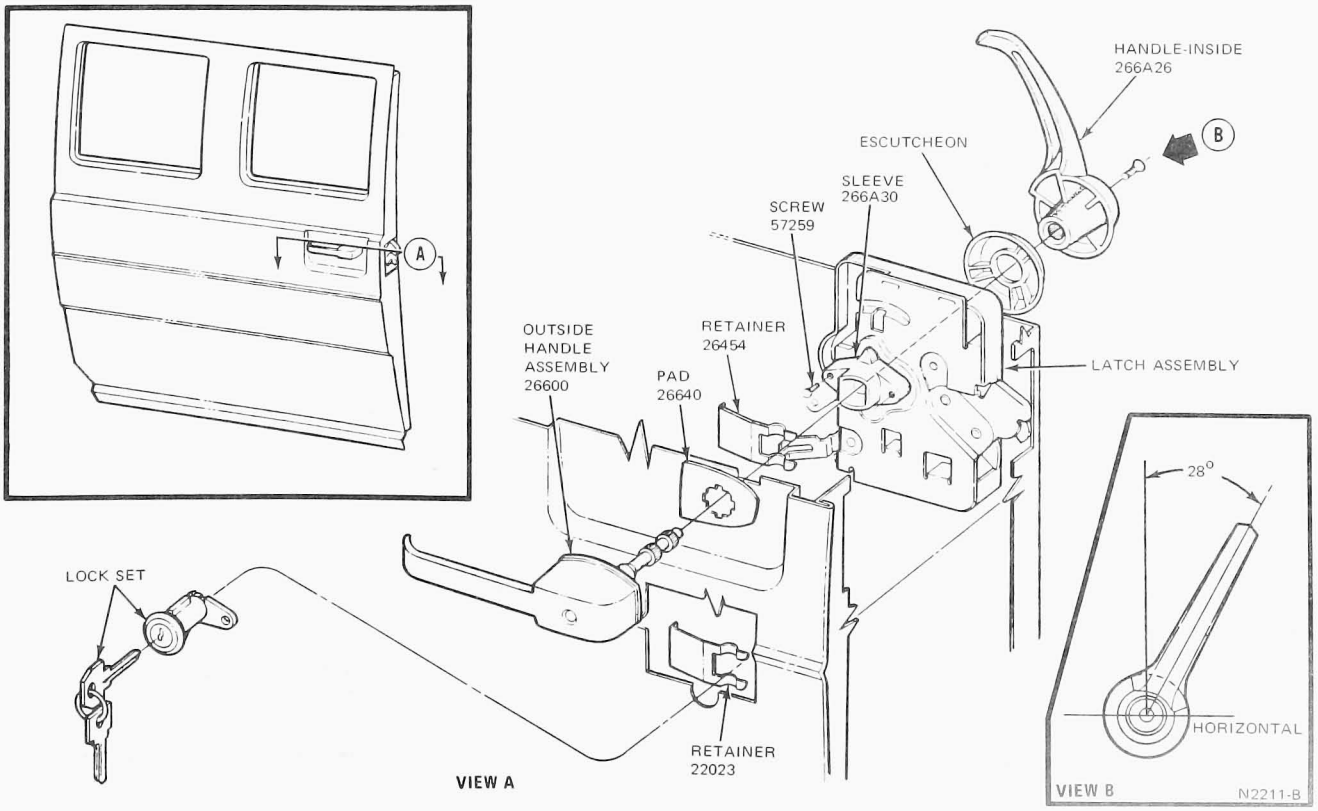

FIG. 4 Sliding Door—Lock and Latch—Econoline

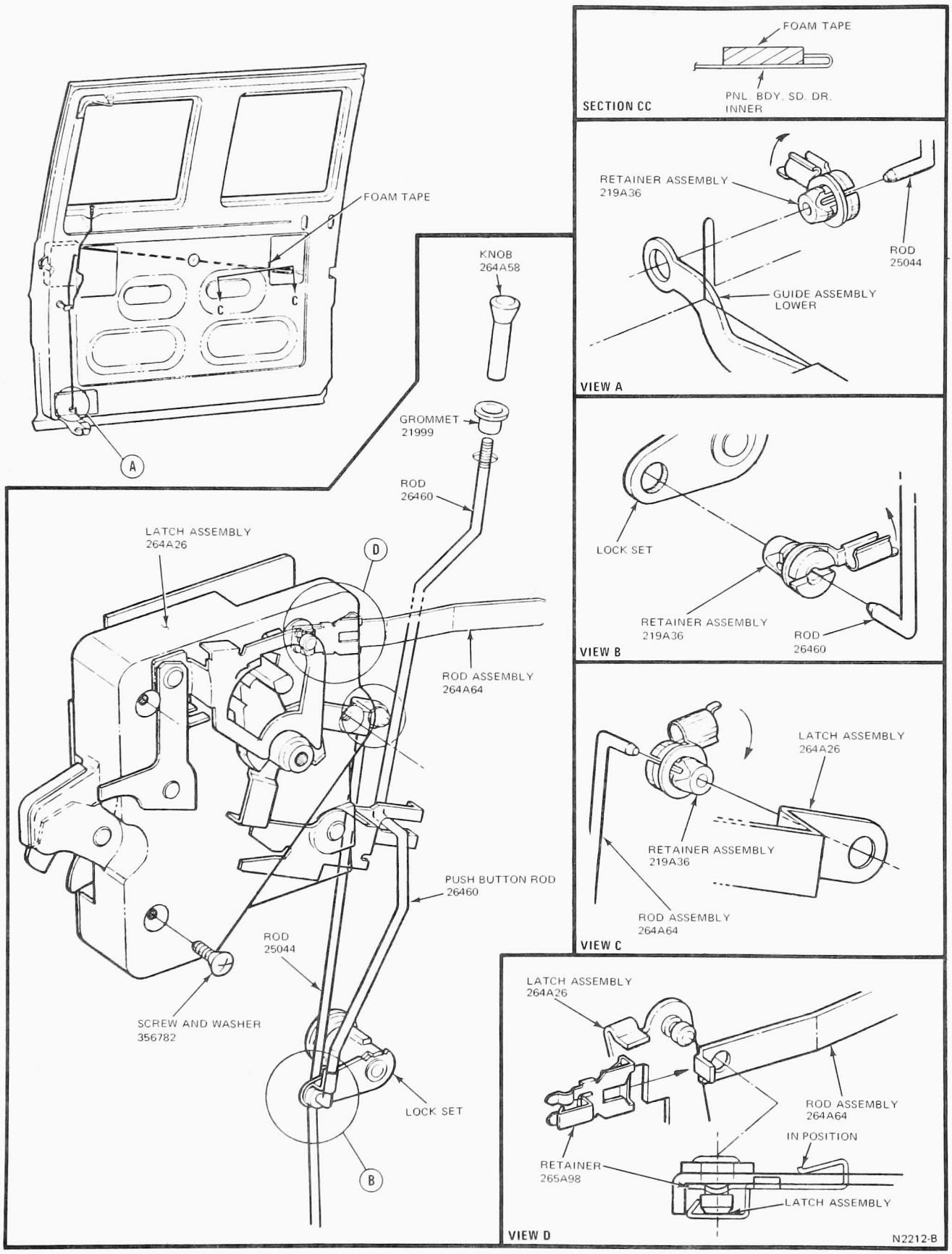

FIG. 5 Sliding Door—Latch and Rods—Econoline

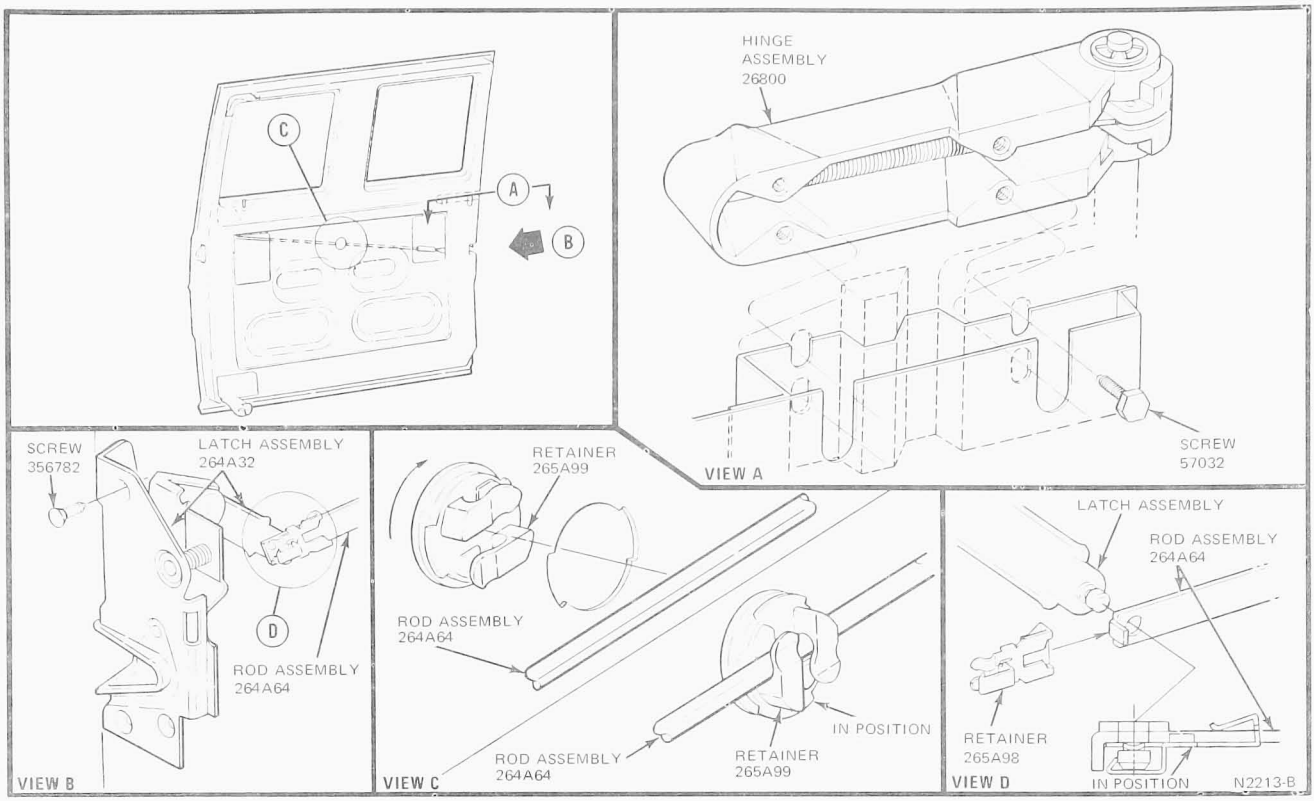

FIG. 6 Sliding Door—Hinge, Latch and Rods— Econoline

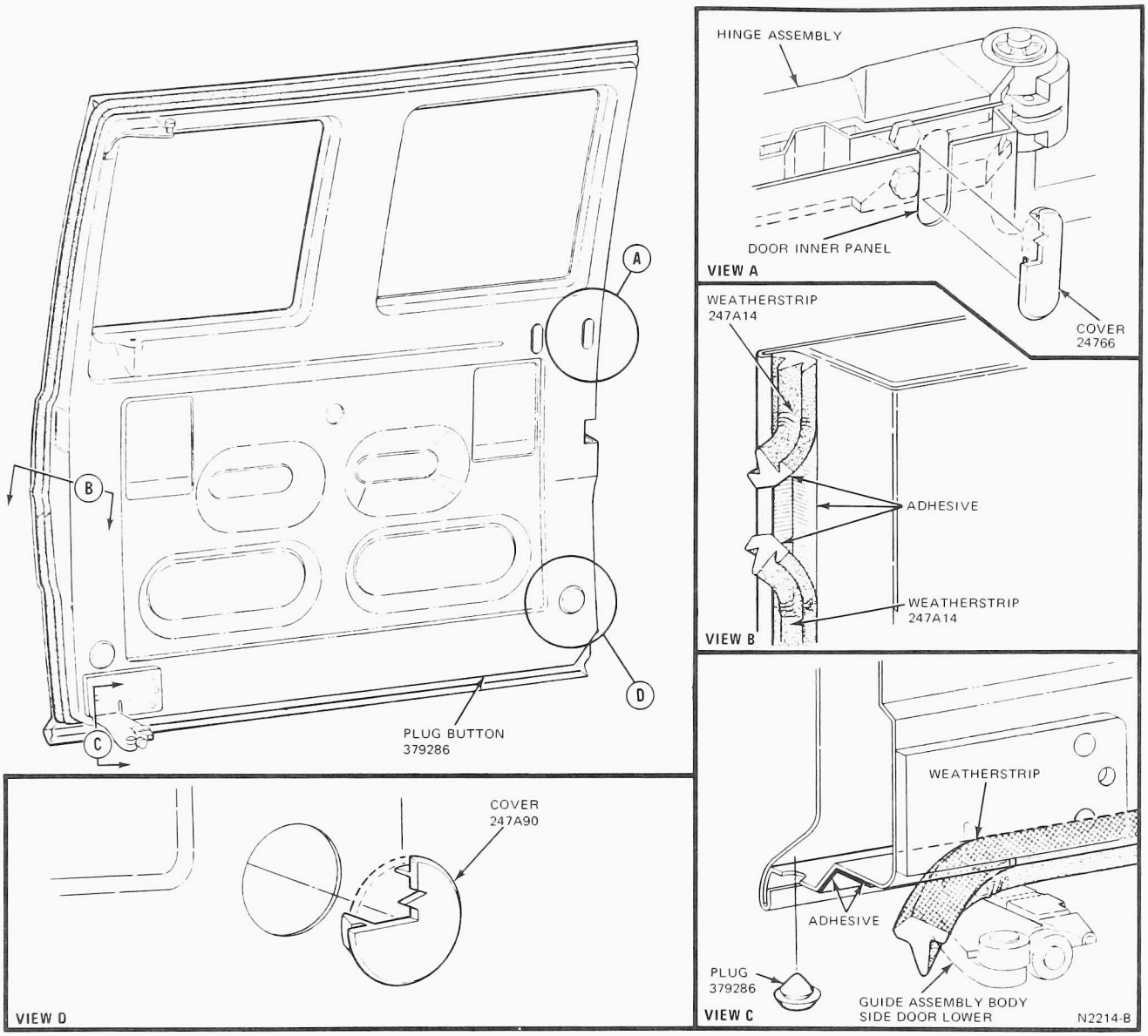

FIG. 7 Sliding Door—Weatherstrips and Access Hole Covers—Econoline

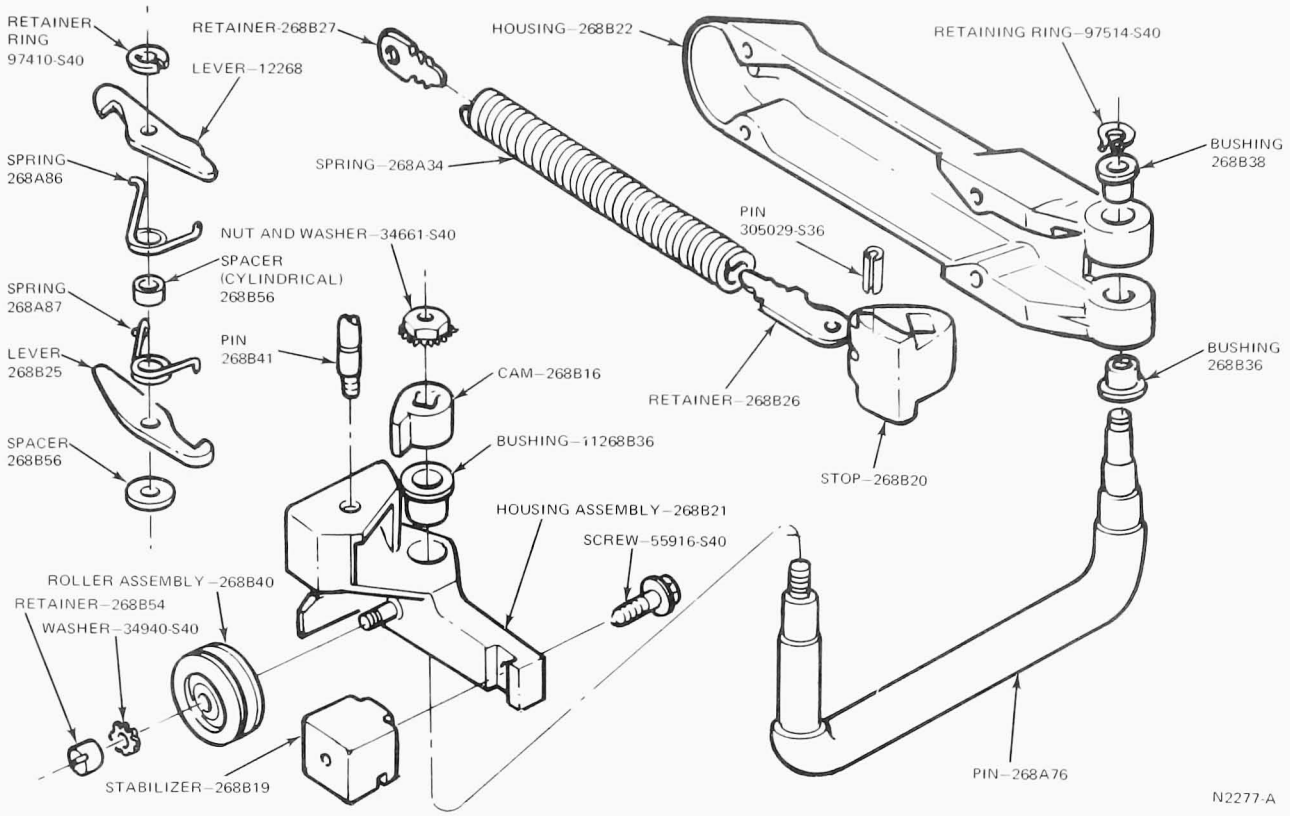

FIG. 8 Hinge Disassembled

PART 44-11 Door Latches and Locks

COMPONENT INDEX Applies to Models as Indicated	All Models	Bronco	Econoline	F-Series	L-Series	C-Series	W-Series
ADJUSTMENTS - Door Latch Striker							
REMOVAL AND INSTALLATION							
Handle–Door Inside		11-05	11-05	11-05	11-05	11-05	11-05
Door Outside		11-07	11-07	11-06	11-06	11-06	11-06
Latch–Door		11-02	11-02	11-02	11-02	11-02	11-02
Lock Cylinder	11-04						
Remote Control–Door Latch		11-04	11-04	11-04	11-04	11-04	11-04

A page number indicates that the item for the vehicle(s) listed at the head of the column.
N/A indicates that the item is not applicable to the vehicle(s) listed.

ADJUSTMENTS

LATCH STRIKER ADJUSTMENT

Use tool No. T70P-2100-A where required.

The striker pin can be adjusted laterally and vertically as well as fore and aft. The latch striker should not be adjusted to correct door sag. The latch striker should be shimmed to get the clearance shown in Figs. 1 through 3, between the latch striker and the latch. To check this clearance, clean the latch jaws and the striker area, and then apply a thin layer of dark grease to the latch striker. As the door is closed and opened, a measurable pattern will result. Move the striker assembly laterally to provide a flush fit at the door and the body.

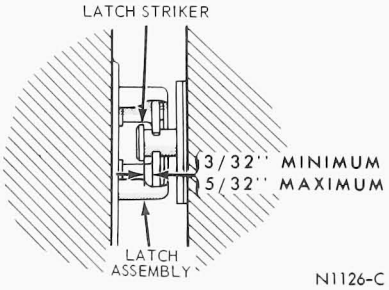

FIG. 3 Door Latch Striker Adjustment—Bronco

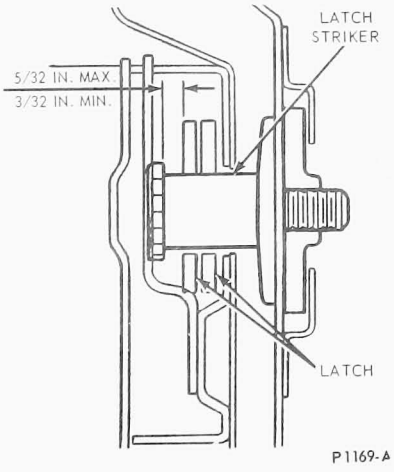

FIG. 1 Latch Striker Adjustment—Typical

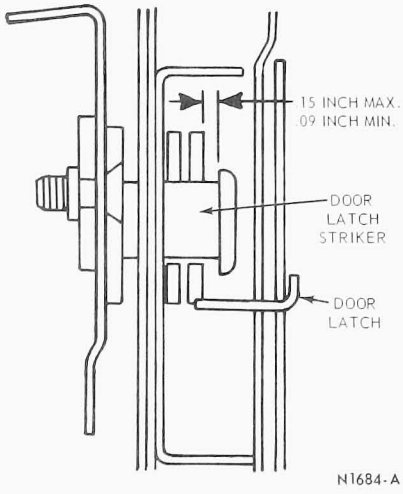

FIG. 2 Door Latch Striker Adjustment—Econoline

REMOVAL AND INSTALLATION

DOOR LATCH

L-W-AND C-SERIES

Removal

1. Remove the door trim panel and/or access hole cover attaching screws and remove the trim panel and/or the access hole cover.
2. Disconnect the remote control link and the push button rod (Figs. 5 through 9) from the latch assembly.
3. Remove three screws attaching the latch to the door and remove the latch assembly.

Installation

1. Lubricate the latch assembly with Polyethelyne grease (Part Number 19584).
2. Position the latch assembly to the door and install the three attaching screws.
3. Connect the push botton rod and the control link to the latch assembly.
4. Check the operation of the latch and install the trim panel and/or access hole cover.

F-100 THROUGH F-750

Removal

1. Remove the trim panel and watershield from the door.
2. Disconnect the rods from the latch assembly (Fig 4).
3. Remove the latch assembly attaching screws and remove the latch from the door.

Installation

1. Install the rod retaining clips in the new latch assembly.
2. Position the latch in the door and install the latch attaching screws.
3. Connect the rods to the latch assembly and check the operation of the latch.
4. Install the watershield and trim panel on the door.

FRONT DOOR LATCH

ECONOLINE

Removal

1. Remove the access cover from the door inner panel.
2. Disconnect the remote control link and the push button rod (Fig. 10) from the latch assembly.
3. Remove three screws attaching the latch to the door and remove the latch assembly.
4. Remove the link and rod retainers from the latch assembly.

Installation

1. Install the rod and link retainers on the latch assembly.
2. Lubricate the latch assembly with Polyethelyne grease (19584).
3. Position the latch to the door and install the three attaching screws.
4. Connect the push button rod and the remote control link to the latch assembly.
5. Check the operation of the latch and install the door inner panel.

DOOR LATCH

BRONCO

Removal

1. Raise the window all the way up.
2. Remove the door inside handles.

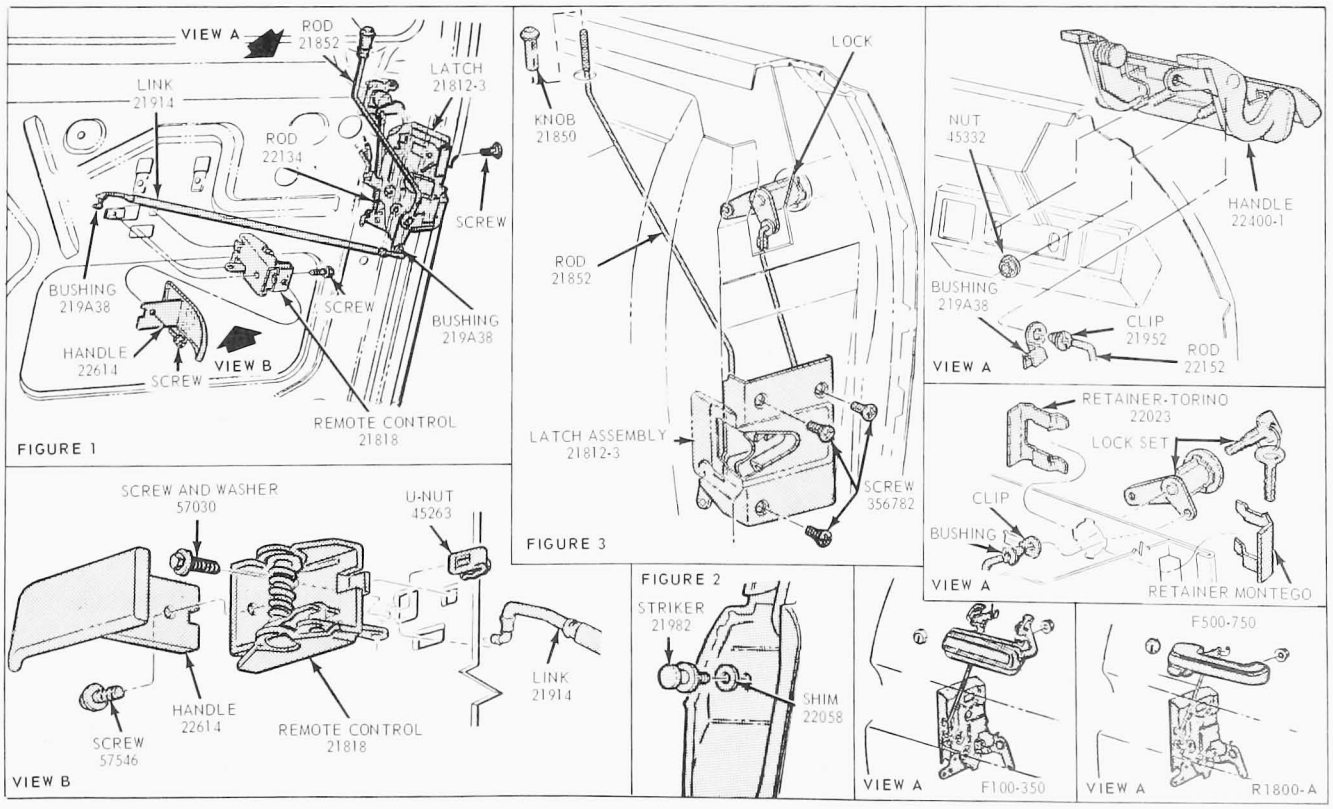

FIG. 4 Door Latch Installation—F-Series

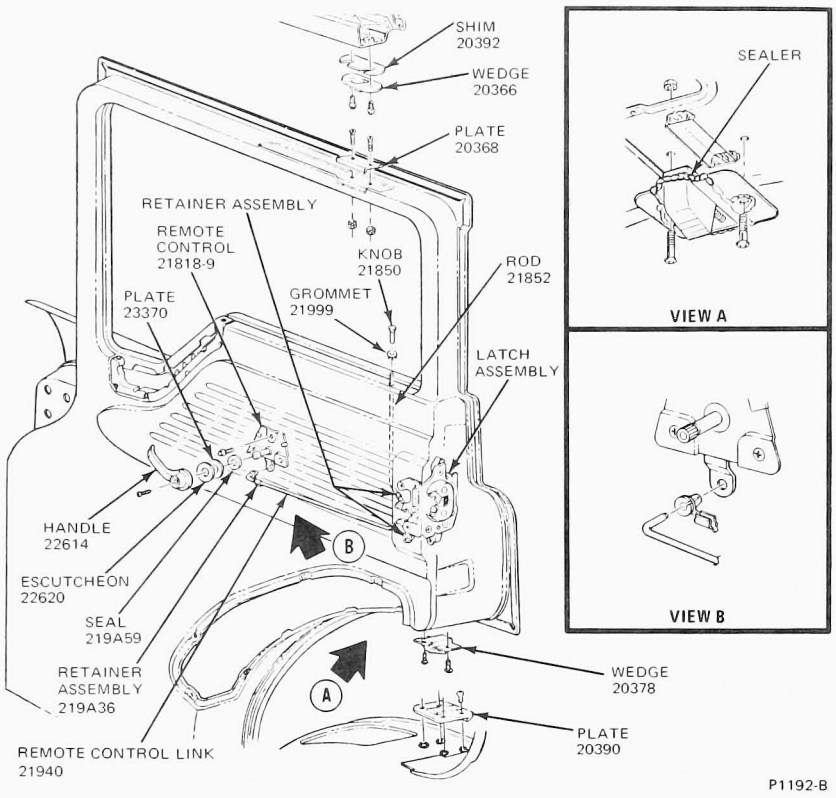

FIG. 5 Door Latch Installation—C-Series

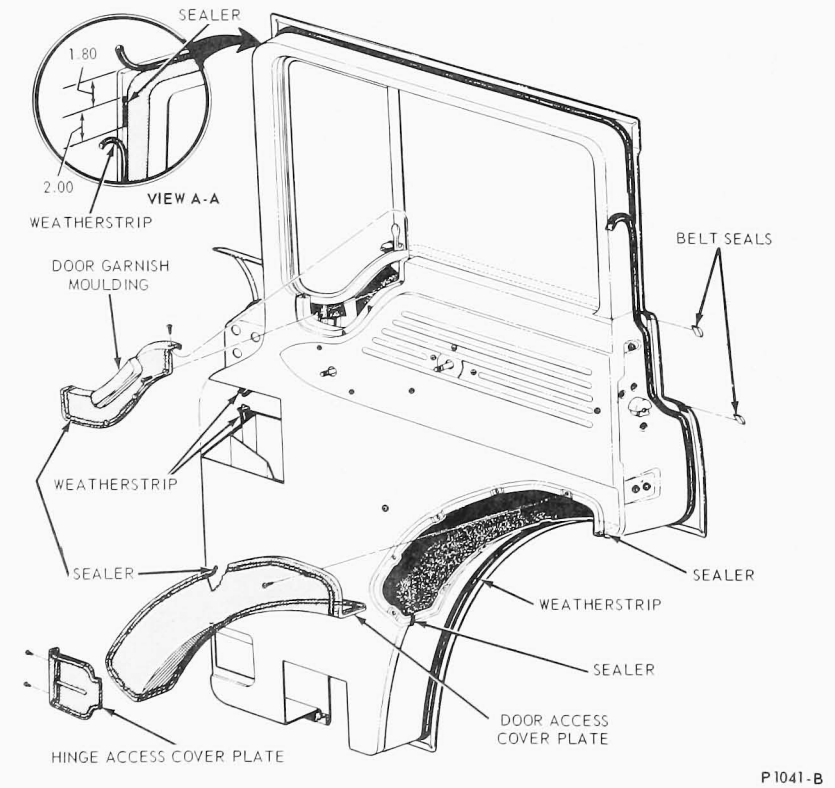

FIG. 6 Door Latch Access Hole Covers—C-Series

3. Remove the seven screws that secure the access cover plate to the door inside panel. Remove the access cover plate and the water shield.
4. Remove the two door glass rear run attaching screws and remove the rear run (Group 42).
5. Remove the retainers that secure the door latch control rod and the door latch actuating rod to the door latch assembly (Fig. 11). Disconnect the rods from the door latch assembly.
6. Remove the three screws that secure the door latch assembly to the door lock post. Remove the door latch from the door through the access hole opening.

Installation

1. Position the door latch assembly against the inner side of the door lock post.
2. Secure the door latch assembly to the door lock post with three screws.
3. Position the door latch control rod and the door latch actuating rod on the door latch assembly and secure the rods with the retainers.
4. Install the door glass rear run in the door.
5. Cement the water shield to the inside surface of the inner door panel.
6. Position the access cover plate and secure it with seven screws.
7. Install the door inside handles.

DOOR LATCH—CARGO FRONT SIDE OR RIGHT REAR DOOR

ECONOLINE

Removal

1. Remove the trim panel from the door, if so equipped.
2. Disconnect the lock cylinder rod from the door latch.
3. **SIDE DOOR ONLY: Disconnect the push button rod and the remote control link from the latch.**
4. Remove three screws attaching the latch to the door, and remove the latch from the door.
5. Transfer the rod retainers to the new latch.

Installation

1. Position the latch assembly in the door and install the three attaching screws.
2. **SIDE DOOR ONLY:** Connect the push button rod and the remote control link to the latch.
3. Connect the lock cylinder rod to the door latch.
4. Install the door trim panel, if so equipped.

DOOR LATCH AND/OR REMOTE CONTROL—CARGO REAR SIDE OR LEFT REAR DOOR

ECONOLINE

Removal

1. Remove the inside handle from the remote control shaft.
2. Disconnect the lower latch rod from the remote control (Fig. 12).
3. Remove three screws attaching the lower latch guide to the bottom of the door (Fig. 12). Remove the lower latch assembly from the door.
4. Remove three screws attaching the remote control to the door.
5. Remove three screws attaching the upper latch guide to the top of the door (Fig. 12). Remove the upper latch assembly and remote control from the door.
6. Disconnect the upper latch assembly from the remote control.

Installation

1. Assemble the upper latch assembly to the remote control (Fig. 12).
2. Position the upper latch assembly and remote control to the door. Install three screws attaching the upper latch guide to the top of the door.
3. Position the lower latch assembly in the door and connect the lower latch rod to the remote control.
4. Install three screws attaching the lower latch guide to the door.
5. Install three screws attaching the remote control to the door.
6. Install the inside handle on the remote control shaft.
7. Adjust the door for a snug fit against the weatherstrip. This is done by loosening the latch guide attaching screws and moving the latch assembly inboard or outboard as required. Then, tighten the latch guide attaching screws.

REMOTE CONTROL

F-100 THROUGH F-750

1. Remove the door trim panel and watershield.
2. Disconnect the latch remote control rod from the remote control (Fig. 4).
3. Remove the screw attaching the remote control to the door inner panel, and remove the remote control.
4. Transfer the rod clip to the new remote control, if the remote control is to be replaced.
5. Position the remote control to the door inner panel and connect the rod to the remote control.
6. Install the remote control attaching screw.
7. Check the remote control and latch operation.
8. Install the watershield and door trim panel.

ALL EXCEPT F-100 THROUGH F-750

1. Raise the window all the way up.
2. Remove the inside door handle.
3. Remove the access hole cover and/or trim panel and pull away the water shield.
4. Remove the remote control retaining screw(s) (Figs. 5 through 13).
5. Swing the remote control down to the access hole and disconnect the remote control rod from the remote control.
6. Insert the remote control assembly through the access hole and connect the remote control rod to the remote control assembly.
7. Position the remote control and install the retaining screw(s).
8. Install the water shield. The top edge should be cemented to the inner surface of the inner panel.
9. Install the access hole cover plate and/or trim panel.
10. Install the inside door handle.

LOCK CYLINDER

When a lock cylinder is replaced, both door lock cylinders and the ignition lock cylinder should be replaced in a set. This will avoid carrying an extra key which will fit only one lock. If a key is to be replaced, the new key code number is stamped on a metal tag attached to the key.

1. Roll the window to the up position.
2. Remove the access hole cover and/or trim panel and pull away the water shield.
3. Disconnect the lock actuating rod from the lock control link clip.
4. Slide the lock cylinder retainer away from the lock cylinder (Figs. 4 through 16).
5. Remove the lock cylinder.
6. Insert the lock cylinder in the door and connect the lock cylinder retainer.
7. Connect the lock actuating rod to the lock control link clip.
8. Install the water shield. Cement the top edge of the water shield to the top inner surface of the inner panel.
9. Install the access hole cover and/or trim panel.

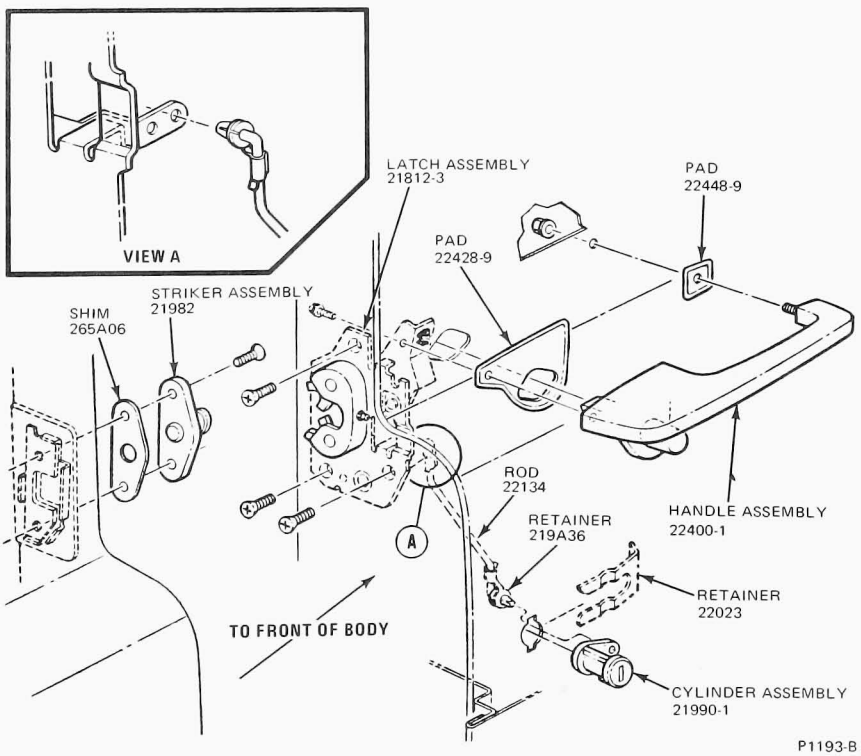

FIG. 7 Door Latch Mechanism—C-Series

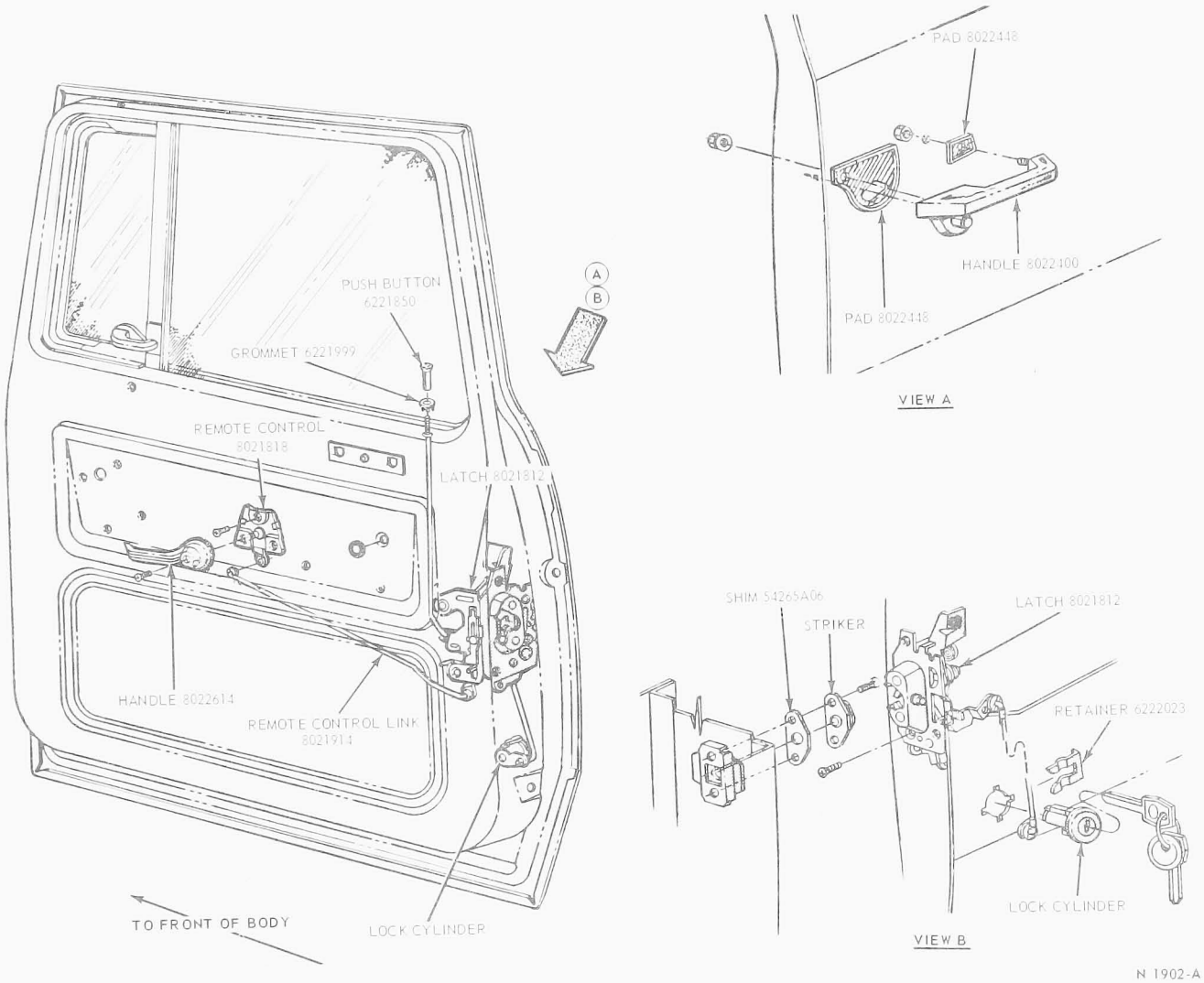

FIG. 8 Door Latch Mechanism—L-Series

DOOR INSIDE HANDLE—CARGO FRONT SIDE DOOR

ECONOLINE

Removal

1. Remove the trim panel from the door, if so equipped (Group 45).
2. Disconnect the rod at the door inside handle bellcrank.
3. Remove three screws attaching the inside handle bracket to the door inner panel and remove the handle.
4. Remove the mounting bracket from the inside handle.

Installation

1. Install the mounting bracket on the inside handle.
2. Position the handle and bracket assembly to the door inner panel and install the three attaching screws.
3. Connect the rod to the inside handle bellcrank.
4. Install the trim panel on the door, if so equipped.

DOOR INSIDE HANDLE

ALL EXCEPT F-100 THROUGH F-750

Removal

To remove the window regulator handle and/or the inside door handle, remove the set screw(s) that secure the handle(s) to the serrated shaft(s) protruding from the inside door panel.

Installation

1. With the window in the down position, install the window regulator handle on the serrated shaft of the regulator assembly so that the handle points in a forward direction with the center line of the handle approximately 75 degrees above the horizontal line of the body. Install the set screw to secure the handle to the serrated shaft.
2. Install the door handle on the serrated shaft of the remote control assembly so that the handle points in a foward direction with the center line of the handle approximately 75 degrees above the horizontal line of the body. Install the set screw to secure the handle to the serrated shaft.

F-100 THROUGH F-750

To remove the door inside handle,

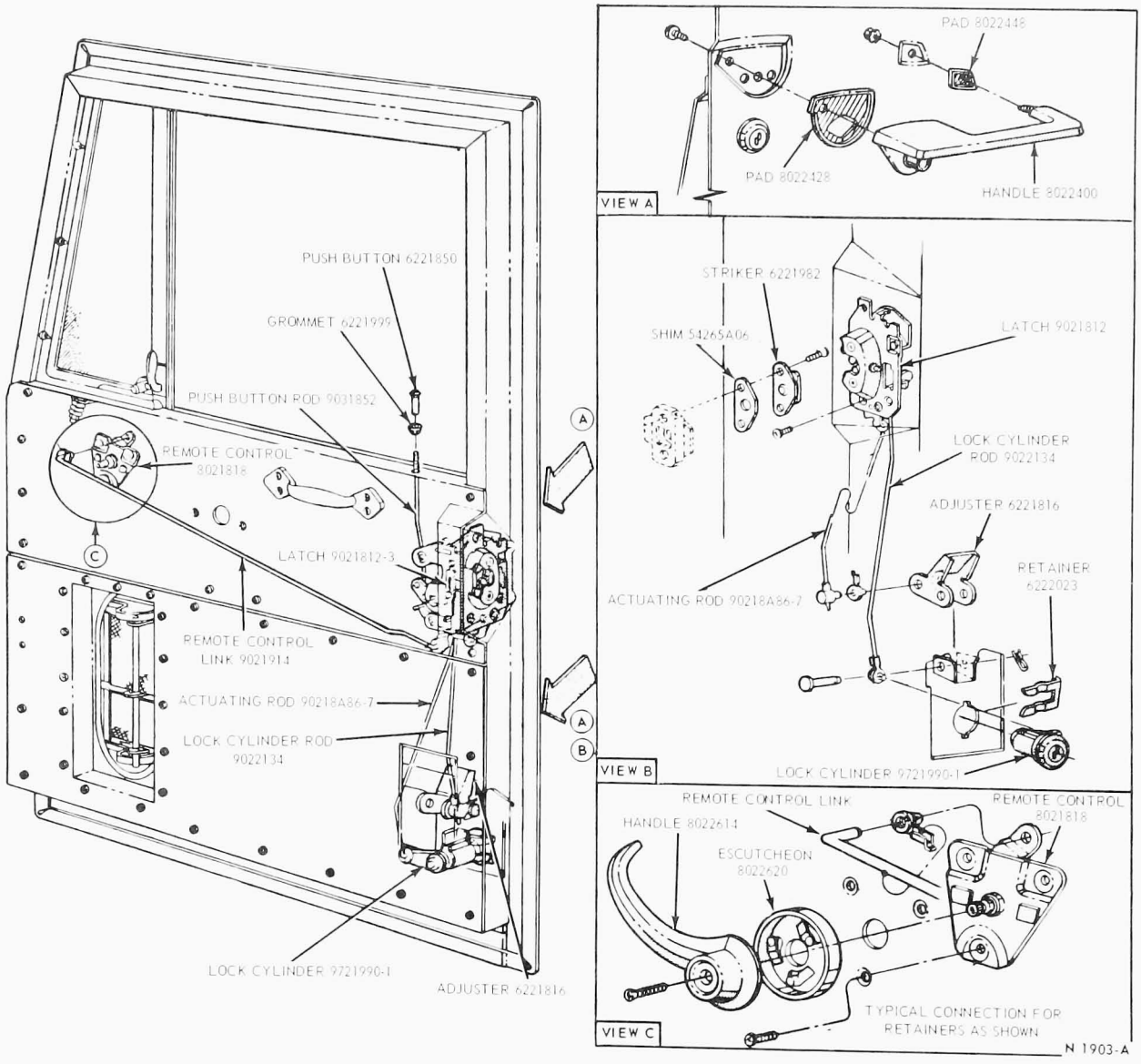

FIG. 9 Door Latch Mechanism—W-Series

remove one screw and remove the handle (Fig. 4).

DOOR OUTSIDE HANDLE

W-SERIES

1. Remove the door check strap and the lower inner panel from the door.
2. Remove two screws and nuts attaching the outside handle to the door and remove the handle and pad.
3. Remove the lock cylinder from the outside handle and install the cylinder in a new handle if the handle is to be replaced.
4. Position the handle and pad to the door and the door latch remote control.
5. Install the two outside handle attaching screws and nuts.
6. Position the lower inner panel and check strap to the door and install the attaching screws.

F-100 THROUGH F-750

1. Remove the door trim panel and watershield (Group 45).
2. Disconnect the door latch actuator rod from the door outside handle (Fig. 4).
3. Remove two nuts retaining the handle to the door. Remove the handle and pad from the door.
4. Transfer the actuator rod clip and the pad to the new handle, if the handle is to be replaced.
5. Insert the handle into the door and install the two retaining nuts.
6. Connect the door latch actuator rod to the door latch (Fig. 4).
7. Check the door latch operation and then, install the door trim panel.

L-W-AND C-SERIES

1. Remove the trim panel and/or access hole cover plate.
2. Remove the retaining screw at the weatherstrip flange and the retaining nut inside the door at the front of the handle (Fig. 15).
3. Pull the handle from the door, and remove the two pads.
4. Position the pads to the door (add sealer) and install the retaining nut and retaining screw at the weatherstrip flange.

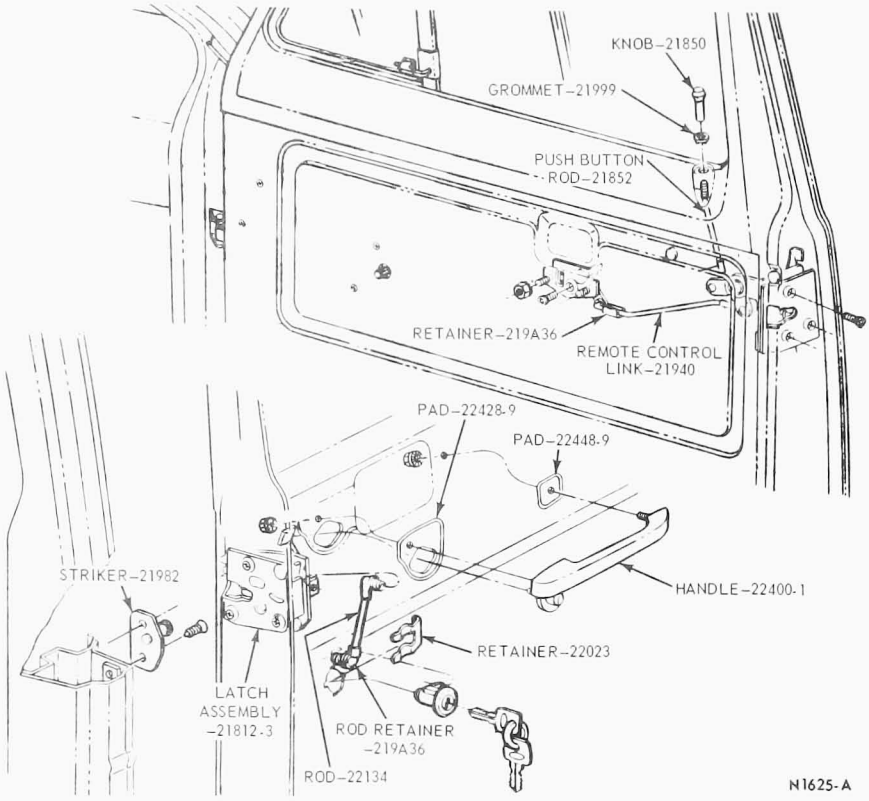

FIG. 10 Door Latch Installation—Econoline

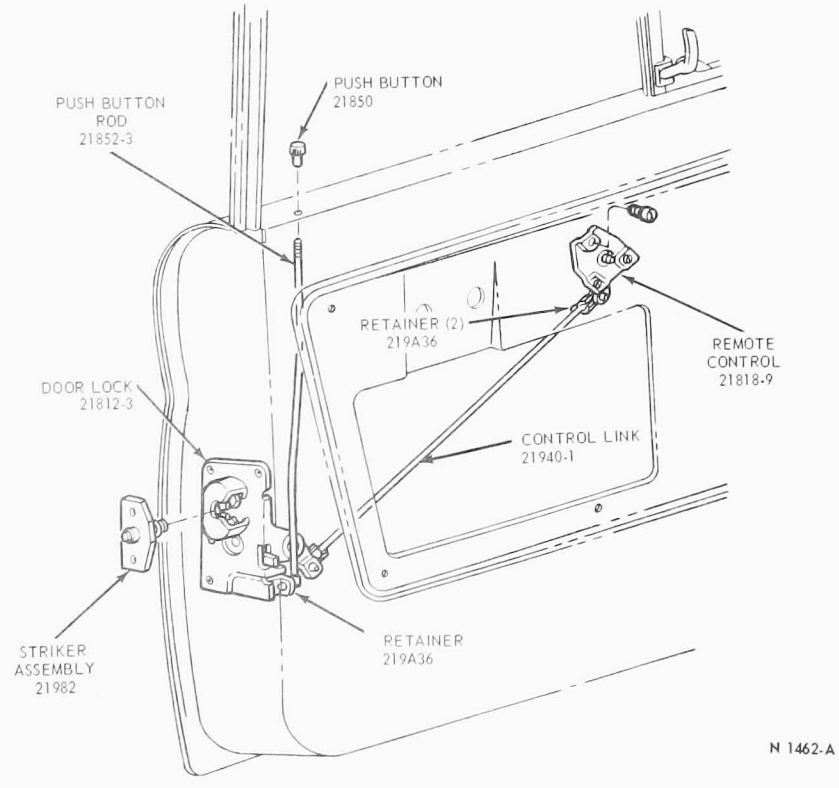

FIG. 11 Door Latch and Remote Control Installation— Bronco

5. Install the water shield if so equipped. The top edge should be cemented to the inner surface of the inner panel.
6. Install the access hole cover plate and/or trim panel.

DOOR OUTSIDE HANDLE—CARGO FRONT SIDE OR RIGHT REAR DOOR

ECONOLINE

Removal

1. Remove the trim panel from the door, if so equipped.
2. Remove two nuts retaining the outside handle to the door. Remove the handle and pads from the door (Fig. 16).

Installation

1. Position the two pads and the outside handle to the door, and install the two retaining nuts.
2. Check the operation of the latch, and install the trim panel, if so equipped.

DOOR OUTSIDE HANDLE

BRONCO

Removal

1. Remove the inside door handles, door access cover plate, and water shield.
2. Remove the retainer from the door lock control rod. Disconnect the rod from the outer door handle (Fig. 14).
3. Remove the retaining nut and lock washer that secure the front of the outside handle to the door panel.
4. Remove the screw and lock washer that secure the rear of the outside handle to the door from the weatherstrip flange.
5. Pull the outside door handle from the door, and remove the two door handle pads.

Installation

1. Position the door pads and the outside door handle (Fig. 14) on the door. When placing door pads on the door outer panel, make sure that the contour of the pads align with the contour of the handle mating surfaces.
2. Secure the front of the outside handle with a lock washer and retaining nut. Secure the rear end of the handle with the lock washer and screw.
3. Position the door lock control rod on the door handle and secure the rod with the retainer.
4. Install the water shield, door access cover, and the inside door handles.

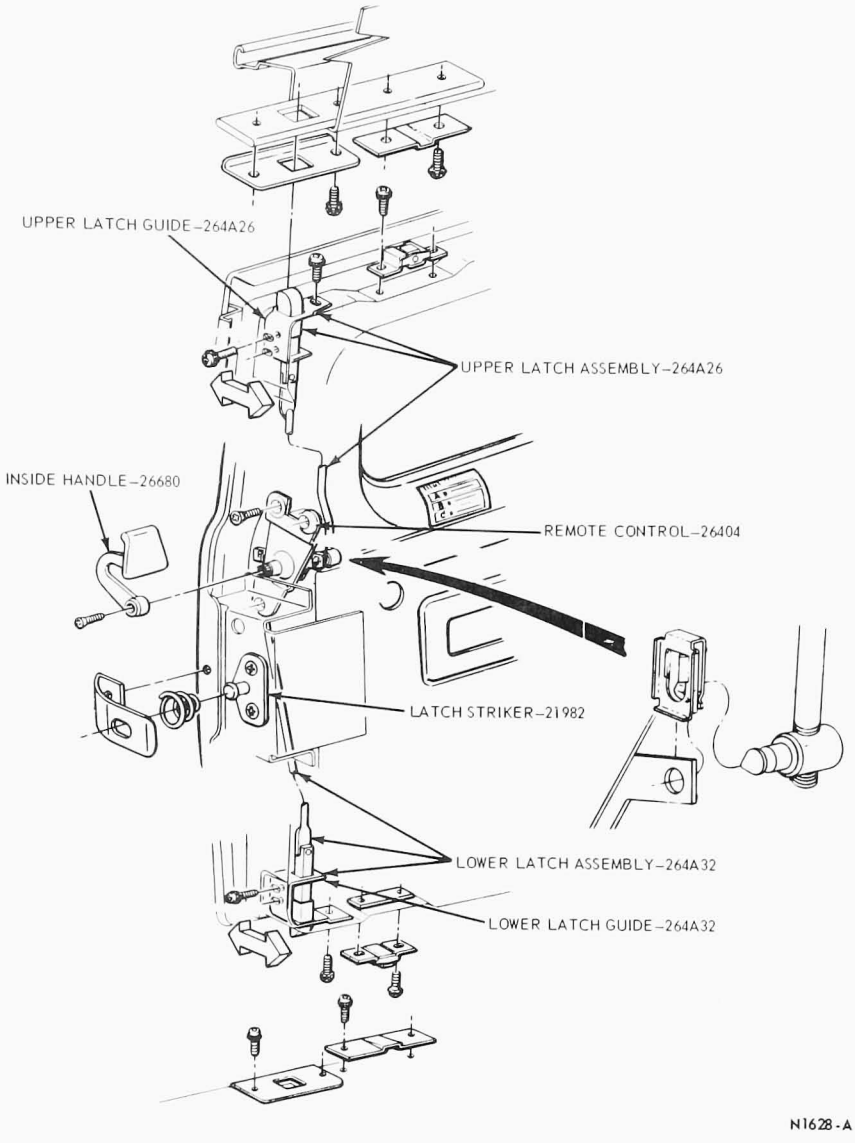

FIG. 12 Door Latch Installation—Cargo Rear Side or Left Rear Door—Econoline

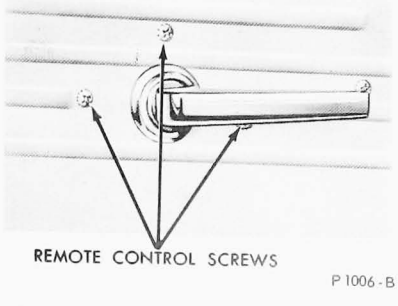

FIG. 13 Latch—Remote Control

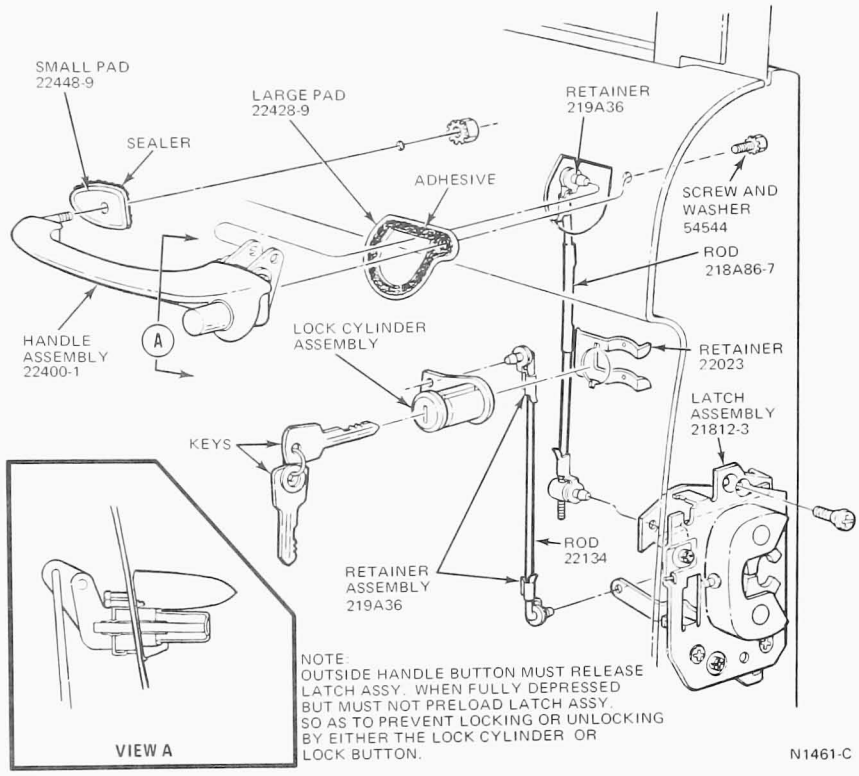

FIG. 14 Door Outside Handle and Locking Mechanism—Bronco

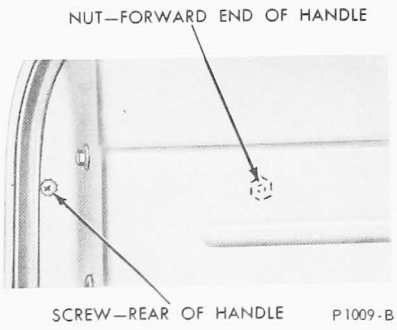

FIG. 15 Typical Door Outside Handle Removal

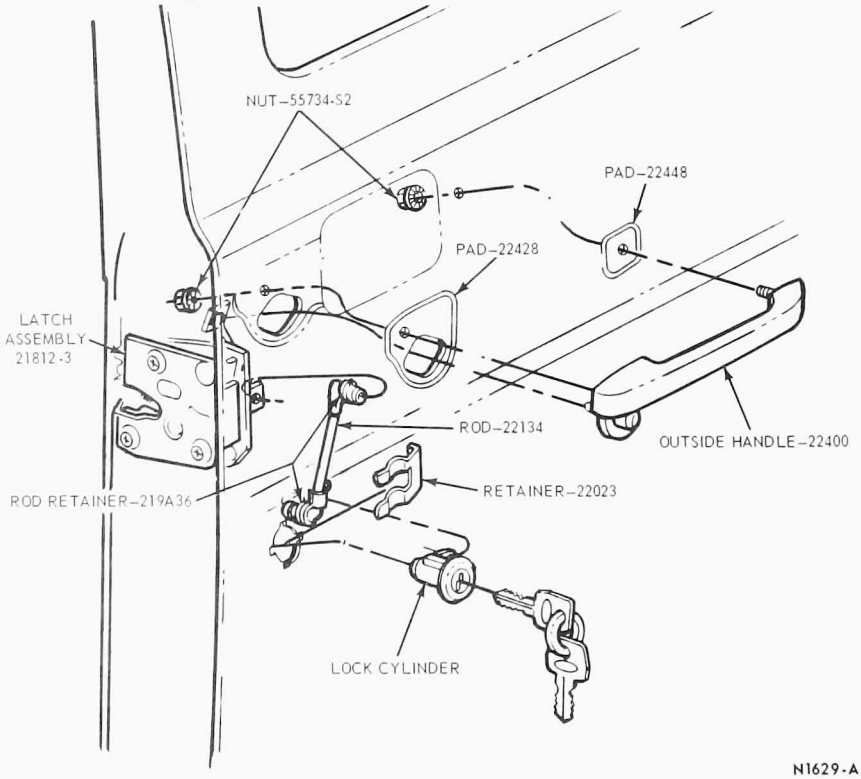

FIG. 16 Door Outside Handle and Locking Mechanism—Econoline

PART 44-21 Hood and Hinges

COMPONENT INDEX Applies to Models as Indicated	All Models	Bronco	Econoline	F-Series	L-Series	C-Series	W-Series	B-Series	P-Series
ADJUSTMENTS									
Hood			21-02	21-01			N/A	21-01	N/A
REMOVAL AND INSTALLATION									
Hinge-Hood			21-03	21-03			N/A	21-03	N/A
Hood		21-02	21-02	21-02	21-03		N/A	21-02	N/A

A page number indicates that the item is for the vehicle(s) listed at the head of the column.
N/A indicates that the item is not applicable to the vehicle(s) listed.

ADJUSTMENTS

F-AND B-SERIES

1. Open the hood and mark the hinge and latch assembly locations.
2. Loosen the hinge to fender apron attaching bolts until they are just snug (Fig. 1).
3. Adjust the hood up or down as required to obtain a flush fit between the hood and the top of the cowl panel. Then, tighten the hinge to fender apron attaching bolts.
4. Loosen the three hood latch assembly attaching screws.
5. Loosen the hinge to hood attaching bolts until they are just snug. Move the hood forward or rearward and from side to side as required for a proper hood fit. Then, tighten the hinge-to-hood attaching bolts and hood latch attaching screws.

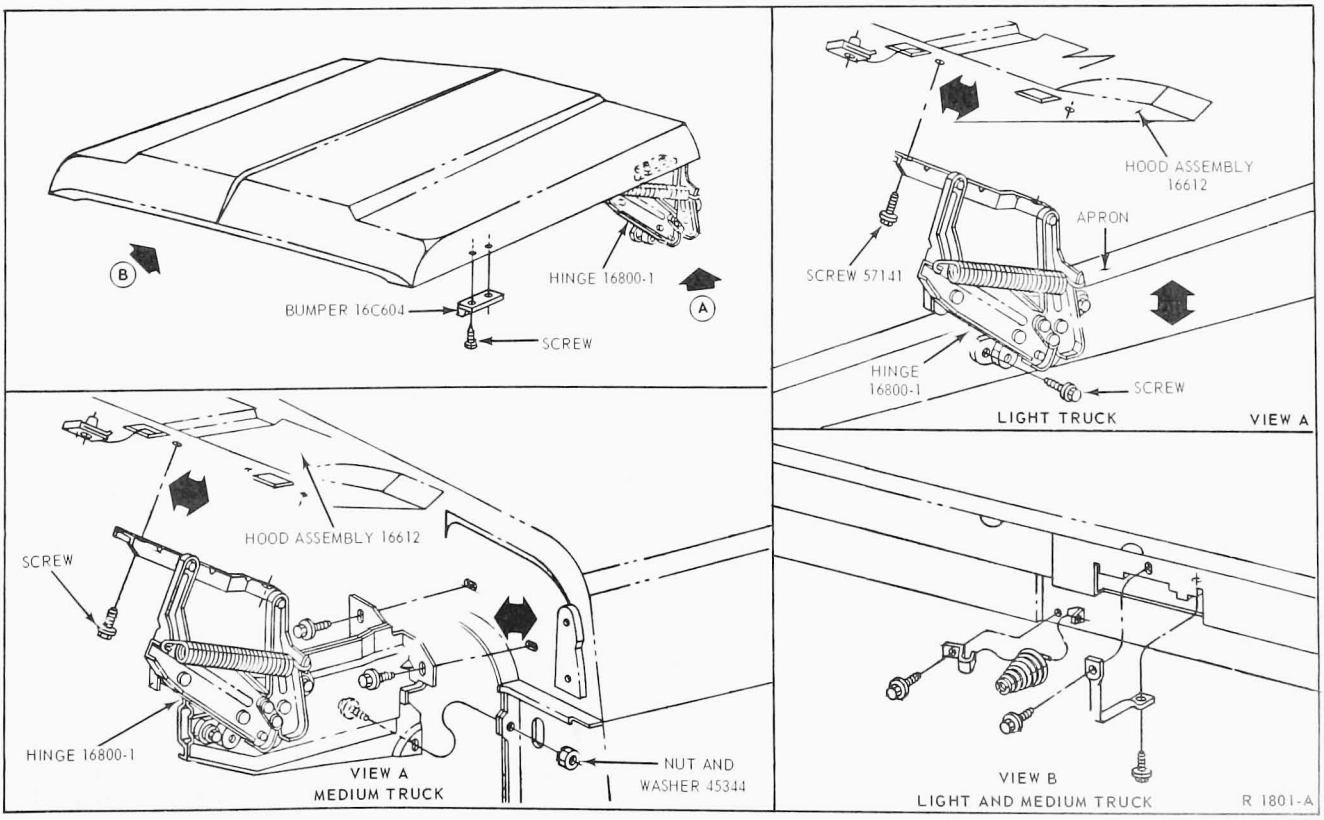

FIG. 1 Hood Hinge and Striker Installation—F-and B-Series

ECONOLINE

The hood can be adjusted fore-and-aft and up-and-down to obtain the proper clearance. To adjust the hood, loosen the hood-to-hinge attaching screws until they are just snug. Then, reposition the hood as required, and tighten the attaching screws. After the hood has been adjusted, check the hood latch and striker adjustment. Adjust the hood latch and striker if required (Fig. 2).

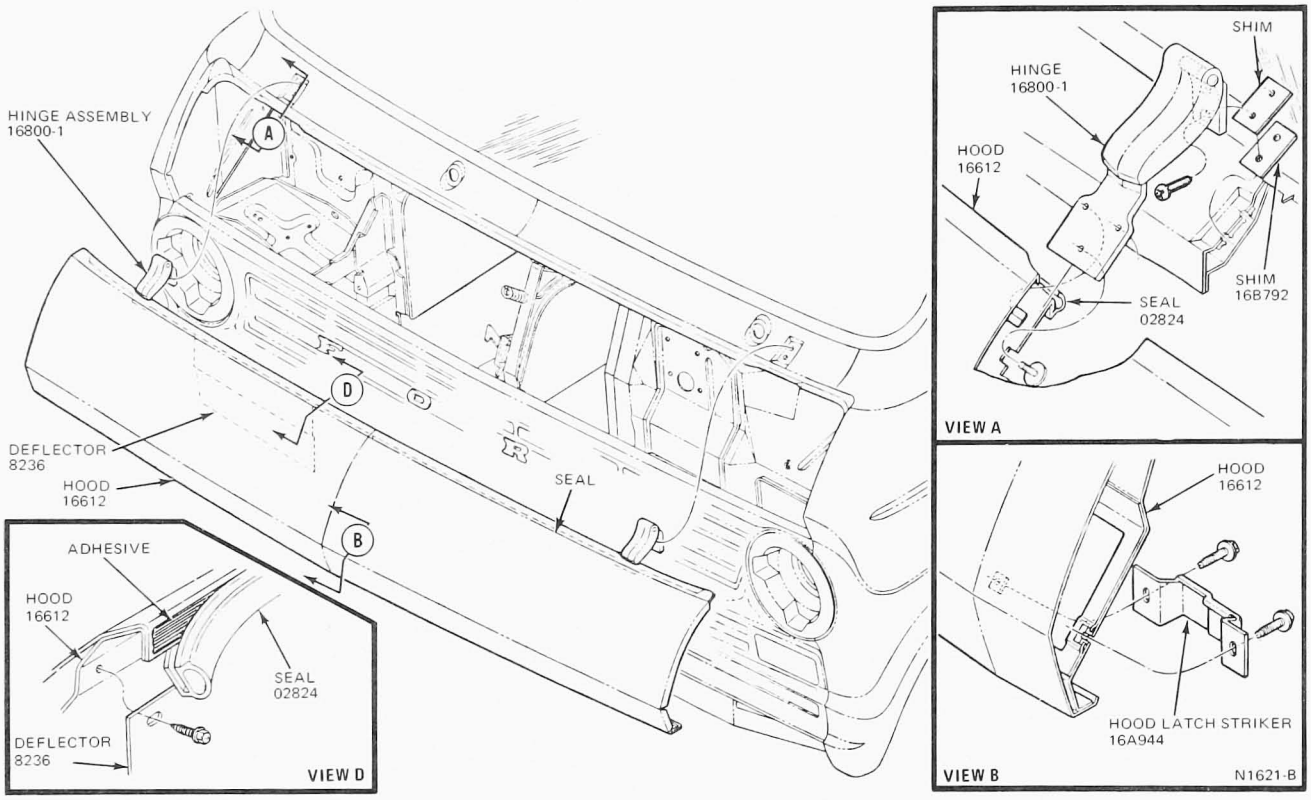

FIG. 2 Econoline Hood Installation

REMOVAL AND INSTALLATION

HOOD

F-AND B-SERIES

1. Remove the hood hinge bolts and with the aid of a helper, lift the hood off the hinges.
2. If the hood is to be replaced, transfer the hood latch components and ornaments to the new hood.
3. With the aid of a helper, position the hood on the hinges and install the hinge bolts just snug.
4. Adjust the hood for a proper fit by shifting the hood on the hinges, and tighten the hinge bolts (Fig. 1).
5. Adjust the hood latch for proper alignment.

ECONOLINE

Removal

1. Open the hood and prop the hood in the open position (Fig. 2).
2. Cover the cowl area to prevent paint damage.
3. Remove three screws attaching each hood hinge to the hood and remove the hood from the vehicle.
4. Remove the hood latch striker from the hood.

Installation

1. Position the hood to the hood hinges and install the attaching screws.
2. Adjust the hood (Adjustments) and tighten the hood-to-hinge attaching screws.
3. Install the hood latch striker on the hood and adjust the hood latch.

BRONCO

Removal

1. Unlatch and raise the hood and, with the aid of a helper holding the hood, remove the four screws that secure the left and right hood hinges to the cowl. Remove the hood.
2. Transfer the hood latching components and the windshield hold-down retainer to the new hood.

Installation

1. With the aid of a helper, position the hood on the cowl and attach each hinge with two screws. Tighten the screws just snug.
2. Adjust the hood for fore and aft fit by shifting the hood on the hinges. Tighten the hinge screws after fitting the hood.

L-SERIES

Removal

1. Tilt the hood assembly forward.
2. Remove the bolts securing the hood hinges to the hood. Support the hood assembly.
3. Disconnect the hood check cable by removing the clevis pin at each attaching point on the hood (Fig. 3).
4. Disconnect the hood wiring harness at the quick disconnect on the cowl.
5. Remove the hood from the vehicle.

Installation

1. Position the hood to the hood hinges and install the attaching bolts (1 each side).
2. Position the hood check cable to each attaching point and install the clevis pin.
3. Connect the wiring harness at the cowl.

HOOD—BUTTERFLY TYPE

L-SERIES

To remove the butterfly type hood, remove the screws retaining the piano type hinge to the hood panel (Fig. 4), and remove the hood from the vehicle.

HOOD HINGE

F-AND B-SERIES

1. Open the hood and prop it in the open position with a suitable prop.
2. Mark the locations of the hinges and remove the spring from both hinges.
3. Remove two screws attaching each hinge to the hood and remove the hood from the vehicle. Do not let the hood slide down and damage the cowl top.
4. Remove the hinge attaching bolts and remove the hinge from the vehicle.
5. Position the new hinges to the vehicle and install the attaching bolts snug.
6. Position the hood to the hinges and install the four attaching screws snug.
7. Remove the prop supporting the hood in the open position.
8. Close the hood and adjust the hood as outlined in Adjustments.

ECONOLINE

Removal

1. Open the hood and prop it in the open position.
2. Cover the cowl area to prevent paint damage.
3. Remove two hinge-to-body attaching screws (Fig. 2).
4. Remove three hinge-to-hood attaching screws and remove the hinge.

Installation

1. Position the hinge to the hood and install the three attaching screws snug.
2. Position the hinge and shim to the body and install the two attaching screws snug.
3. Adjust the hood (Adjustments) and tighten the five hinge attaching screws.
4. Remove the protective cover and close the hood.

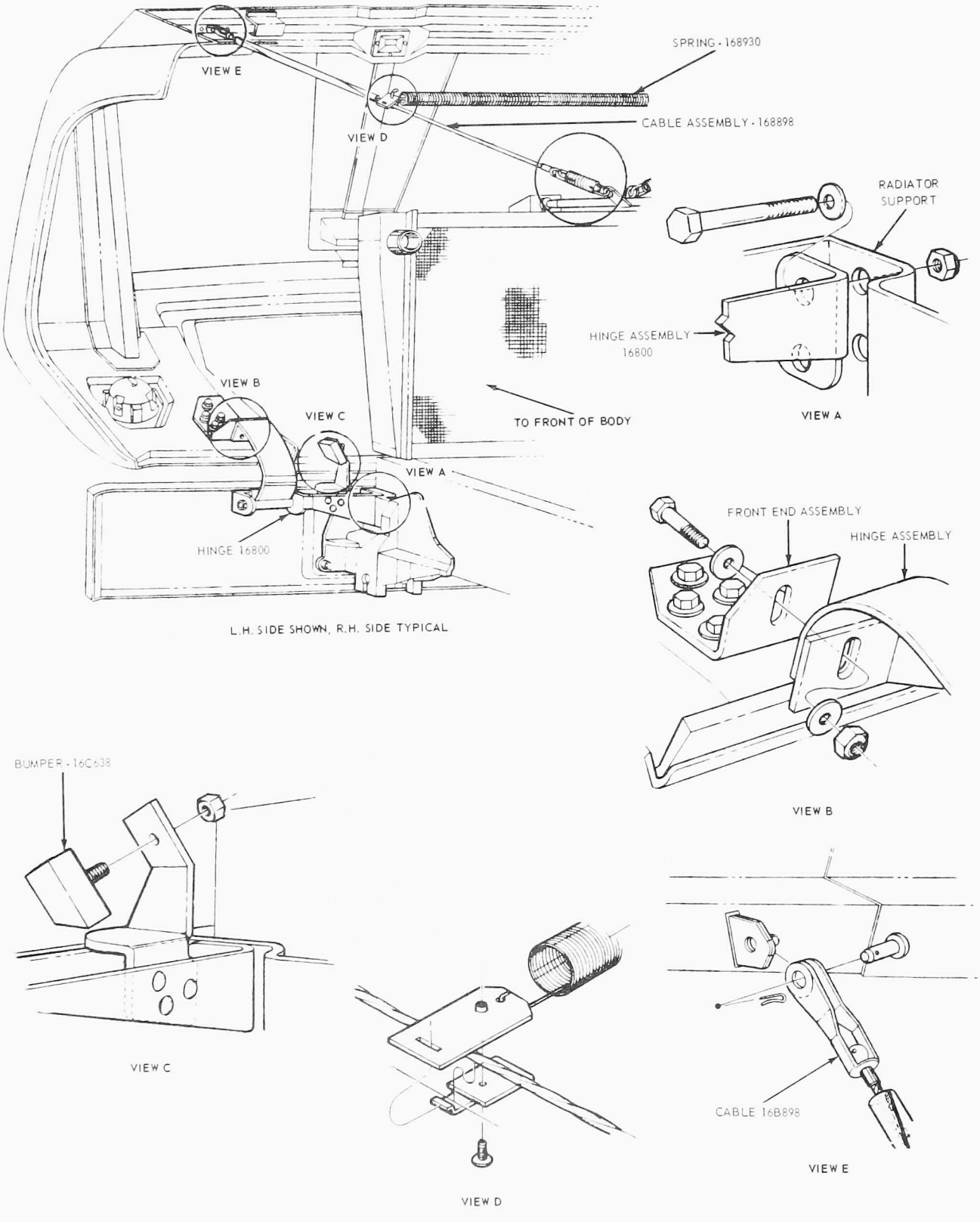

FIG. 3 Hood Assembly—L, LN and LT-Series

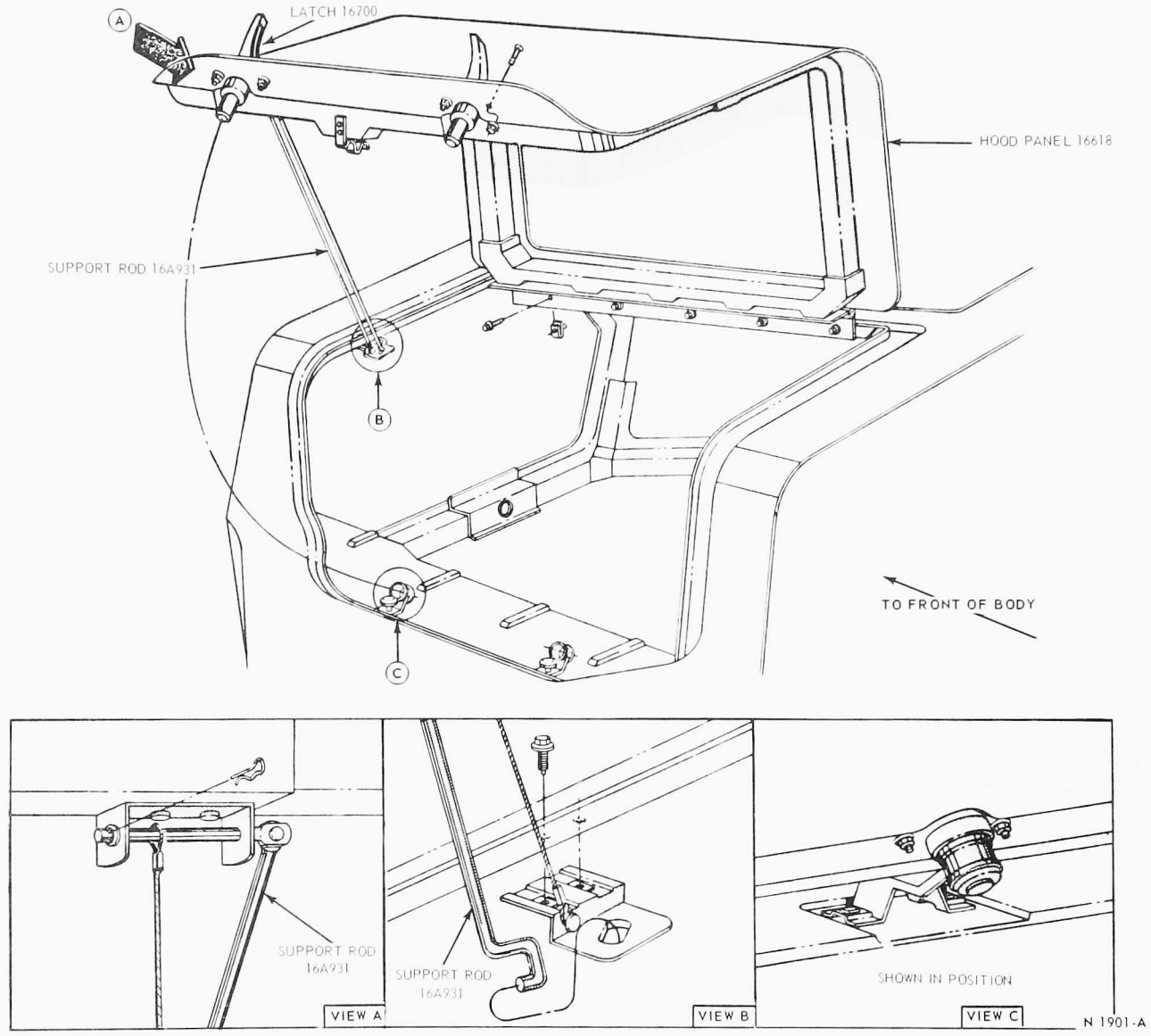

FIG. 4 Butterfly Type Hood—L-, LN-, and LT- Series

PART 44-31 Hood Latch

COMPONENT INDEX Applies To Models As Indicated	All Models	Bronco	Econoline	F-Series	L-Series	C-Series	W-Series	B-Series
ADJUSTMENTS Latch-Hood			31-01	31-01	31-01	N/A	N/A	31-01
REMOVAL AND INSTALLATION Hook–Hood Latch		31-03		31-04	N/A	N/A	N/A	31-04
Latch–Hood		31-04		31-04	31-04	N/A	N/A	31-04

A page number indicates that the item is for the vehicle(s) listed at the head of the column.
N/A indicates that the item is not applicable to the vehicle(s) listed.

ADJUSTMENTS

HOOD LATCH ADJUSTMENT

L-SERIES

The hood latch adjustment on L-Series vehicles provides a means of increasing or decreasing hood latch tension. To increase latch tension, turn the head of the latch clockwise (Fig. 1). Counterclockwise rotation decreases latch tension.

ECONOLINE

Before adjusting the hood latch mechanism, make certain that the hood is properly aligned. The hood latch assembly can be moved fore-and-aft to position the latch the proper distance from the striker (Fig. 2) for a snug hood fit. The latch striker can be adjusted up-and-down to obtain full depth hook engagement of the hood latch hook (Fig. 3) to assure positive hood retention.

1. Check for excessive hood free play to determine if the hood latch should be moved foreward or rearward. If free play is present when the hood is latched, the latch should be moved rearward. If the hood will not latch, the latch should be moved forward.
2. Loosen the hood latch attaching screw and washer assemblies and move the latch assembly forward or rearward as required to obtain a snug hood fit when the hood is latched (Fig. 2). Tighten the screw and washer assemblies and check the latch adjustment. Repeat this procedure as required to obtain positive hood latch engagement with a minimum of free play.
3. Check the hood latch hook to be sure it makes full hook engagement with the hood latch striker.
4. If the hook does not make full depth engagement, loosen the striker attaching screw and washer assemblies (Fig. 3) and reposition the striker to obtain full hook engagement. Then, tighten the screw and washer assemblies, and check the operation of the hood latch.

F-AND B-SERIES

Before adjusting the hood latch, make certain that the hood is properly aligned. The hood latch can be moved from side-to-side to obtain alignment with the hood latch hook. The hood latch hook can be adjusted up and down to obtain a snug hood fit (Figs. 4, 5 and 6).

1. Loosen the hood latch attaching screws just enough to move the latch.
2. Move the latch from side-to-side until it is aligned with the hood latch hook. Then, tighten the latch attaching screws.
3. Loosen the hood latch hook attaching screws just enough to move the latch hook.
4. Raise or lower the hood latch hook as required to obtain positive hood latch-to-hook engagement with a minimum of free play. Tighten the hood latch hook attaching screws. Check the hood latch to be sure it makes full engagement with the hood latch hook. If the hood latch does not make full engagement with the hood latch hook, loosen the hood latch hook attaching screws and reposition the hook to obtain full engagement. Then, tighten the attaching screws.

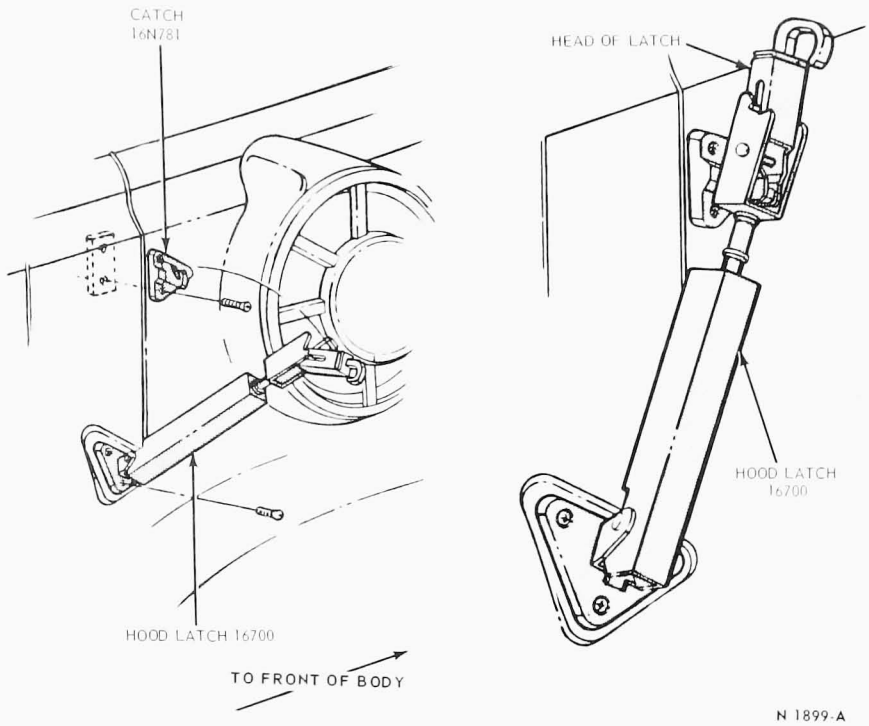

FIG. 1 Hood Latch Installation—L-Series

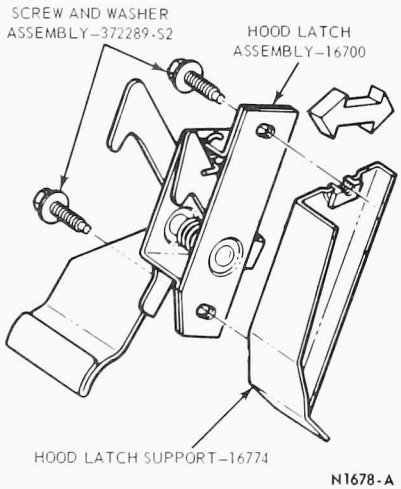

FIG. 2 Econoline Hood Latch Adjustment

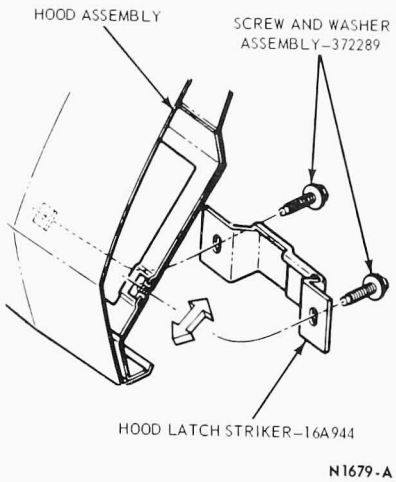

FIG. 3 Econoline Hood Latch Striker Adjustment

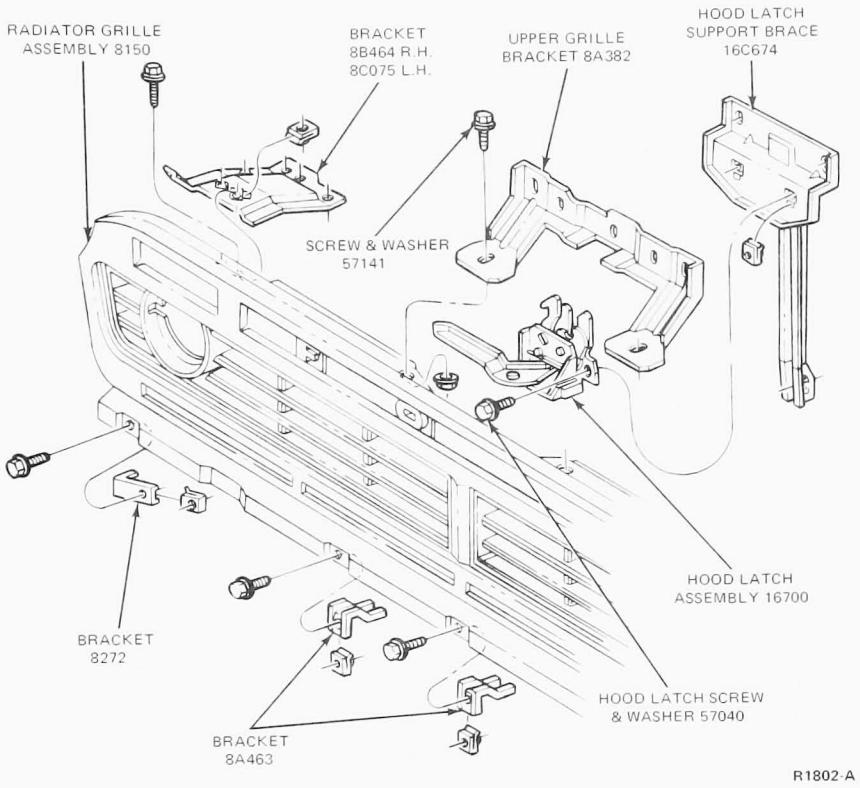

FIG. 4 Hood Latch Installation—F-100 through F-350

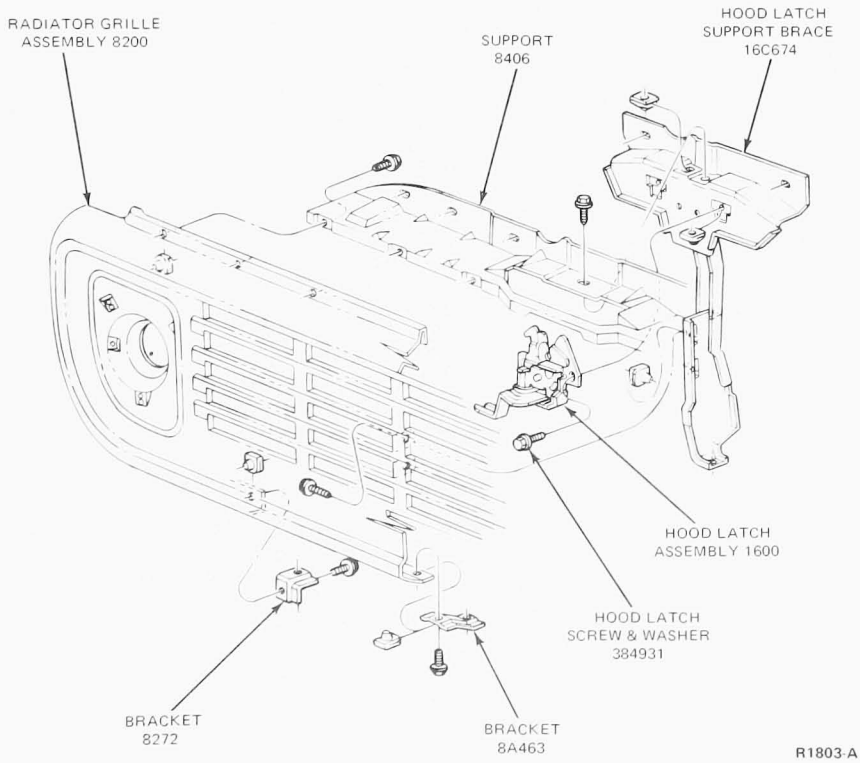

FIG. 5 Hood Latch Installation—F-500 Through F-750 and B-500 Through B-750 Series

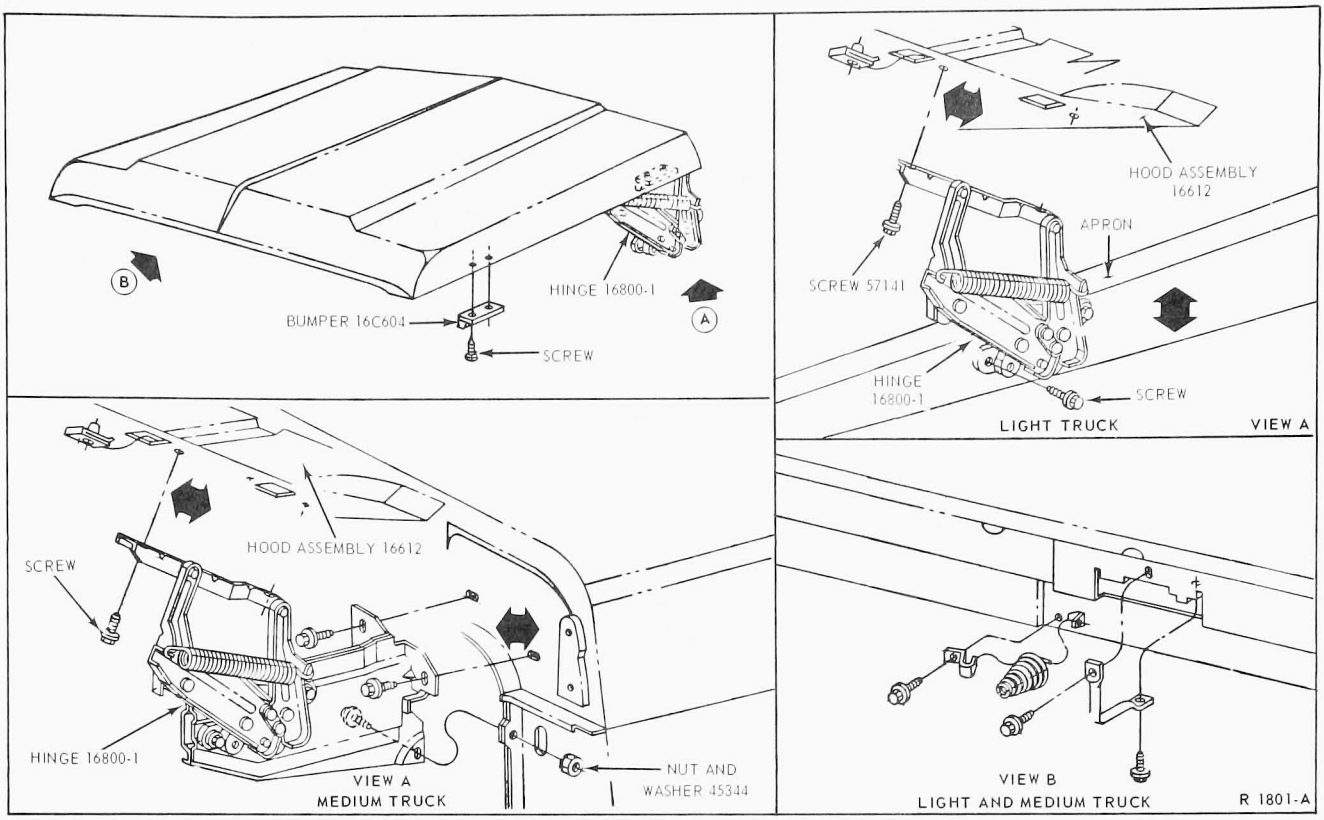

FIG. 6 Hood Latch Striker Installation—F-and B-Series

REMOVAL AND INSTALLATION

HOOD LATCH

F- AND B- SERIES

1. Open the hood and remove the hood latch attaching screws and remove the latch assembly from the hood.
2. Position the latch assembly to the hood and install the attaching screws snug but do not tighten.
3. Adjust the latch assembly for positive engagement with the hood latch hook and tighten the latch attaching screws.

L-SERIES

To remove the hood latch assembly, remove the six screws which retain the latch assembly to the hood and the cowl side panel (Fig. 1). Then remove the latch.

BRONCO

Removal

1. Unlatch and raise the hood. Secure the hood in the open position with the hood support rod.
2. Remove the four screws that secure the hood latch assembly to the latch bracket of the grille (Fig. 7). Remove the latch from the opening between the grille and radiator.
3. Remove the four jay nuts from the latch.

Installation

1. Position the four jay nuts on the latch.
2. Position the latch assembly on the underside of the latch bracket.
3. Secure the latch to the bracket with four screws. Do not tighten the screws.
4. Disengage the hood support rod from the hood and lower the hood to the latch. Shift the latch until the hood catch is centered with the latch opening. Tighten the screws securing the latch to its bracket and close the hood.

HOOD LATCH HOOK OR AUXILIARY CATCH STRIKER

F-500 THROUGH 750, 6000, 7000 AND B-SERIES

1. Remove two screws attaching the hood latch hook to radiator support and the grille upper support (Fig. 6) and remove the hook.
2. Position the hook to the grille upper support and the radiator support and install the two screws loose.
3. Adjust the hood latch mechanism as necessary for positive engagement of the hood latch and tighten the attaching screws.

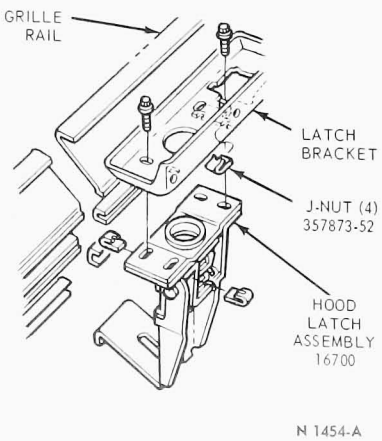

FIG. 7 Bronco Hood Latch Installation

PART 44-86 Tailgate—Bronco and Pickup

COMPONENT INDEX	Page	COMPONENT INDEX	Page
REMOVAL AND INSTALLATION		Latch – Tailgate	86-02
Bracket – Tailgate Latch	86-01	Latch – Tailgate-on Body	86-01
Handle – Latch Release	86-02	Tailgate	86-02

REMOVAL AND INSTALLATION

TAILGATE-ON-BODY LATCH

STYLESIDE PICK-UP

1. Open the tailgate and remove two latch attaching screws and remove the latch (Fig. 1).
2. Position the latch to the body and install the two attaching screws snug.
3. Adjust the latch and tighten the screws securely.

TAILGATE SUPPORT, HANDLE AND LATCH BRACKET

STYLESIDE PICK-UP

Removal

1. Open the tailgate and disconnect the tailgate support arm from the latch bracket assembly as shown in Fig. 1. Then, remove the two upper arm attaching screws.
2. Remove three tailgate handle screws, disconnect the handle release links and remove the handle assembly.
3. Remove three latch bracket-to-tailgate attaching screws and remove the latch bracket assembly.

Installation

1. Position the latch bracket to the tailgate, connect the link to the latch

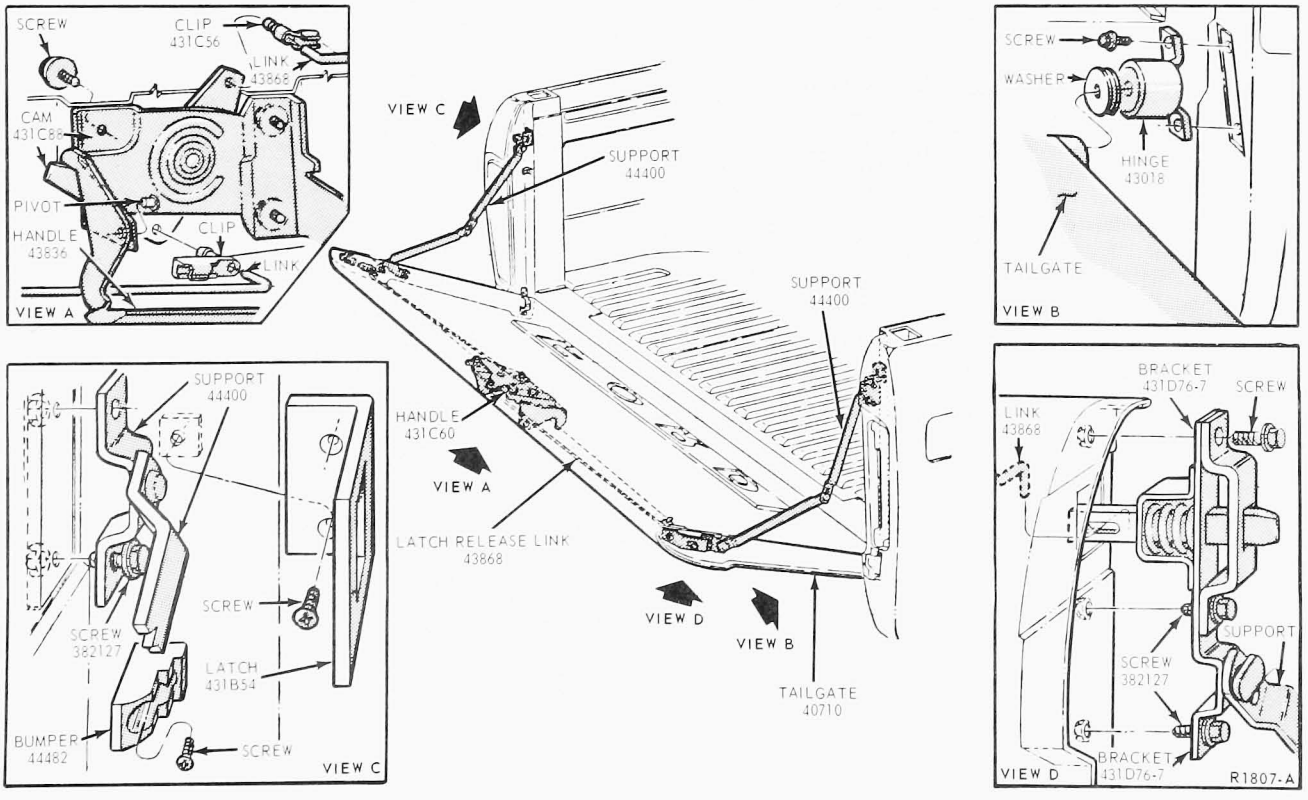

FIG. 1 Tailgate Installation—Styleside Pick-Up

bracket and install the attaching screws.
2. Position the tailgate handle to the tailgate. Connect the links to the center handle assembly and install the handle attaching screws.
3. Connect the tailgate support arm assembly to the latch bracket and install the two upper arm attaching screws.

TAILGATE

Open and support the tailgate assembly and remove the hinge attaching screws on each side of the tailgate (Fig. 1). Then, carefully raise the lower portion of the tailgate upward and disengage it from the tailgate latch brackets. If a new tailgate is being installed, transfer all mouldings, latches, hinges, brackets, links, clips and washers to the new tailgate.

BRONCO

Removal

1. Unlatch the tailgate handle and lower the tailgate (Fig. 2). Disconnect the left and right support assemblies at the tailgate.
2. Disconnect the license plate light wire at the connector. Pull the lead wire from the tailgate body rail.
3. Remove the four screw and washer assemblies that secure the left and right hinge assemblies (Fig. 2) to the body.
4. Remove the tailgate and the hinge assemblies.

Installation

1. Position the hinge assemblies on the tailgate and then position the tailgate on the body (Fig. 2).
2. Secure each hinge assembly to the body (Fig. 2) with two screw and washer assemblies.
3. Connect the support assemblies to the tailgate.
4. Position the license plate light lead in the tailgate body rail and connect the lead to its connector.

TAILGATE LATCH RELEASE HANDLE AND MOUNTING PLATE

BRONCO

Removal

1. Remove the two screw and washer assemblies that secure the release handle mounting plate assembly to the inner panel of the tailgate (Fig. 2).
2. Remove the four screw and washer assemblies that secure the release handle mounting plate assembly to the outer panel of the tailgate.
3. Pull the mounting plate assembly down and away from the outer panel, and remove the two hairpin clips and plain washers that secure the latch release links to the release lever.
4. Disconnect the links from the release lever and remove the mounting plate assembly from the tailgate.
5. Remove the nut assembly and washers that secure the release handle to the release lever bolt. Remove the release handle.

Installation

1. Position the release handle in the mounting plate assembly and attach it to the release lever with the latch release lever bolt, nut assembly, and washers.
2. Hold the mounting plate assembly close to the outer panel opening of the tailgate and position the release links on the release lever. Secure each release link with a plain washer and hairpin clip.
3. Slip the mounting plate assembly into the tailgate panel opening and secure it to the outer panel with four screw and washer assemblies.
4. Secure the mounting plate assembly to the inner panel with two screw and washer assemblies.

TAILGATE LATCH ASSEMBLY

BRONCO

Removal

1. Remove the tailgate handle assembly as described above.
2. Remove the two screw and washer assemblies that secure the latch assembly to the tailgate.
3. Remove the latch and link assembly from the tailgate.

Installation

1. Position the latch assembly on the link. Feed the latch and link assembly into the end of the tailgate and secure the latch assembly and bracket with two screw and washer assemblies. **The tapered side of the latch bolt must face forward.**
2. Install the tailgate handle as described above.

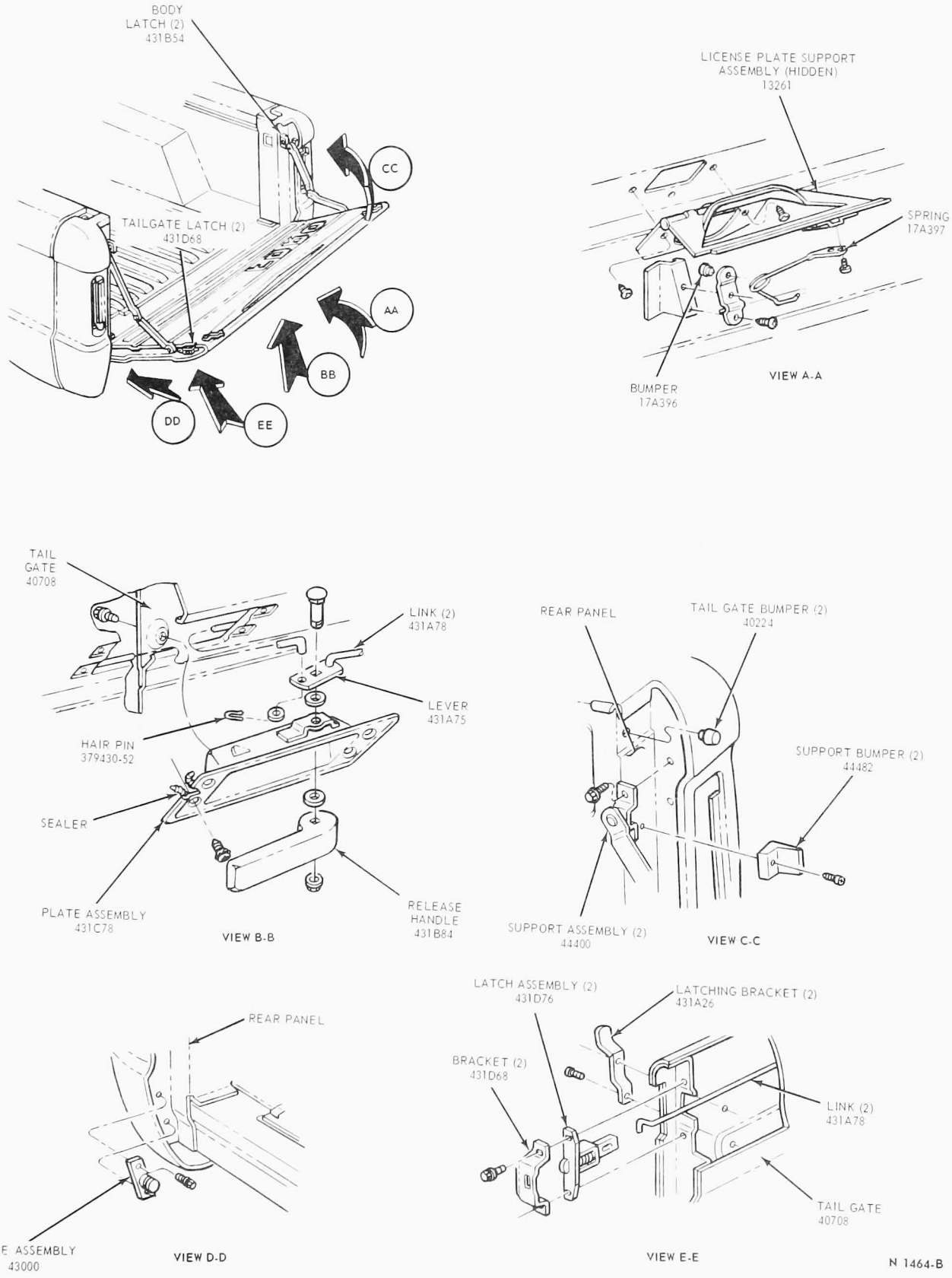

FIG. 2 Tailgate Installation—Bronco

PART 44-92 Liftgate, Hinges and Weatherstrip

Applies Only To Bronco

REMOVAL AND INSTALLATION

LIFTGATE

Removal

1. Unlatch the liftgate (Fig. 1), with the handle, and raise the liftgate. Using a helper to support the liftgate, remove the four screws that attach the left and right prop assemblies to the liftgate.
2. Remove the eight screws, lock washers, and nuts that secure the lift gate to the gate hinge (Fig. 1).
3. Remove the liftgate and sealer strip.

Installation

1. When replacing the liftgate assembly, transfer the glass, handle assembly, locking mechanism, and weatherstrip to the new liftgate.
2. Position the liftgate hinge on the mating body surface (Fig. 1), and secure it with eight screws, lock washers, and nuts.
3. Position the left and right prop assemblies (Fig. 1), on the liftgate and secure each prop assembly with two screws.

LIFTGATE HANDLE ASSEMBLY

Removal

1. Remove the two screws that secure the access plate (Fig. 1), on the liftgate, remove the access plate cover and disconnect the latch rods.
2. Hold the liftgate handle assembly in the unlatched position, and remove the two screws and nuts that secure the handle assembly to the liftgate.
3. Pull the handle assembly from the liftgate and remove the liftgate handle pad.

Installation

1. Position the handle pad and the handle assembly on the liftgate.
2. Turn the handle to the unlatched position. While holding the handle assembly and the pad in position, install the two screws and nuts securing the pad and the handle assembly to the liftgate and connect the latch rods.
3. Position the access plate on the liftgate and secure it with two screws.

LIFTGATE LOCK CYLINDER

Removal

1. Remove the liftgate handle from the liftgate.
2. Remove the spring retaining pin from the liftgate handle and remove the spring and washers (Fig. 1).
3. Remove the collar from the handle.
4. Depress the lock cylinder retaining pin, and remove the lock cylinder from the handle.

Installation

1. Insert the lock cylinder into the handle. Be sure the lock cylinder retaining pin is engaged in the pin hole.
2. Position the collar, spring, and washers on the handle, and install the spring retaining pin (Fig. 1).
3. Install the handle in the liftgate.

LIFTGATE LATCH BOLT ASSEMBLY

Removal

1. Open the liftgate and support the gate on the prop assemblies.
2. Remove the inside cover plate at the outside handle (Fig. 1).
3. Disconnect the latch actuating rod from the lock bracket (Fig. 1).
4. Remove the cover plate at the latch bolt.
5. Remove two screws attaching the latch bolt bracket to the liftgate, and remove the latch bolt assembly and actuating rod from the liftgate.
6. Remove the pin and remove the rod from the latch bolt (Fig. 1).

Installation

1. Position the actuating rod to the latch bolt assembly and install the pin (Fig. 1).
2. Position the latch bolt assembly and rod in the liftgate, and install the two latch bolt assembly attaching screws.
3. Install the latch bolt cover plate.
4. Connect the latch actuating rod to the lock bracket (Fig. 1).
5. Install the outside handle cover plate.

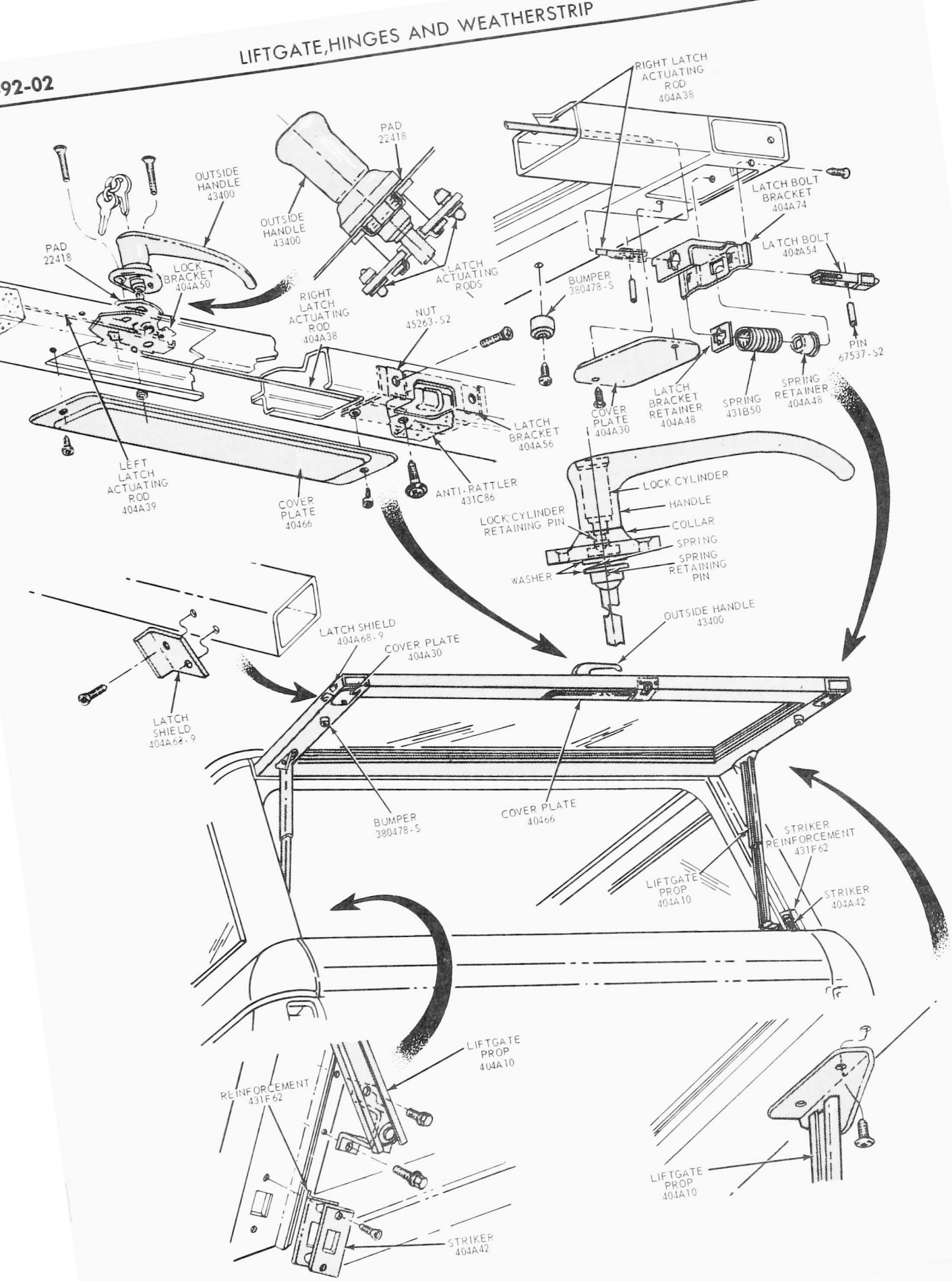

FIG. 1 Liftgate and Components

Interior Trim

GROUP 45

PART 45-01	PAGE	PART 45-26	PAGE
Interior Trim – General Service	45-01-01	Carpets and Floor Mats	45-26-01
PART 45-03		**PART 45-41**	
Door Trim Panels	45-03-01	Headlining	45-41-01
PART 45-11			
Quarter Trim Panels	45-11-01		
PART 45-16		**PART 45-61**	
Mouldings	45-16-01	Instrument Panel Pad	45-61-01

PART 45-01 Interior Trim—General Service

CLEANING AND INSPECTION

1. Vacuum and/or whisk broom upholstery, trim and floor covering.
2. Remove any spots on upholstery using;
   a. Ford Automotive Fabric Spot Lifter (19526) or
   b. Ford Spot Remover (19521) or
   c. Both

   Use each product per label instructions.
3. Shampoo upholstery and carpeting using Ford Kar Kleen (19525) as directed on label.

PART 45-03 Door Trim Panels

REMOVAL AND INSTALLATION

DOOR-TRIM PANEL

BRONCO

Since all of the interior trim panels are retained to the body panels with screws, spring clips and/or metal strips, the removal and installation procedures are obvious. Access to some of these panels, however, requires prior removal of other parts. The pertinent removal procedures are outlined as follows:

To remove the door trim panels, refer to Figure 1. The armrest, inside door handle and window regulator handle must be removed. Then, remove the trim panel retaining screws, spring clips, retainers and the trim panel.

ECONOLINE

Removal

1. Remove the arm rest retaining screws and remove the arm rest from the door inner panel (Fig. 2).
2. Remove the four retaining screws from the door inside shroud and remove the shroud.
3. Remove the screws retaining the door trim panel and remove the trim panel.

Installation

1. Position the door trim panel to the trim panel retainers and install the retaining screws.
2. Position the door inside shroud to the door and install the retaining screws.
3. Install the arm rest to the door inside panel.

L-C AND W-SERIES

Removal

1. Remove the retaining screws and arm rest assembly if so equipped.
2. On models so equipped, remove the trim moulding assembly from the metal panel by unsnapping the retainers (Fig. 3). If equipped with a trim panel assembly, the trim panel will come off when the moulding is removed.
3. Remove the retaining screws and

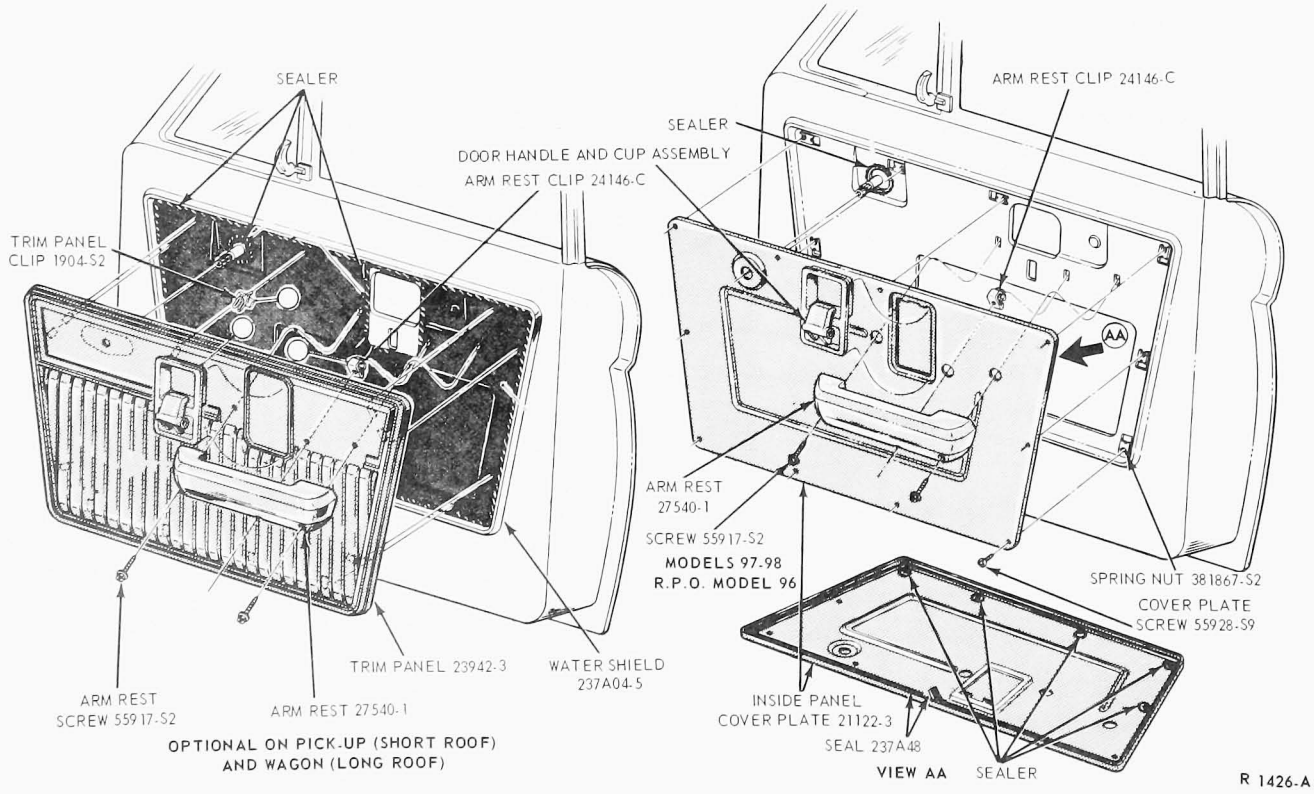

FIG. 1 Bronco Door Trim Panel Installation

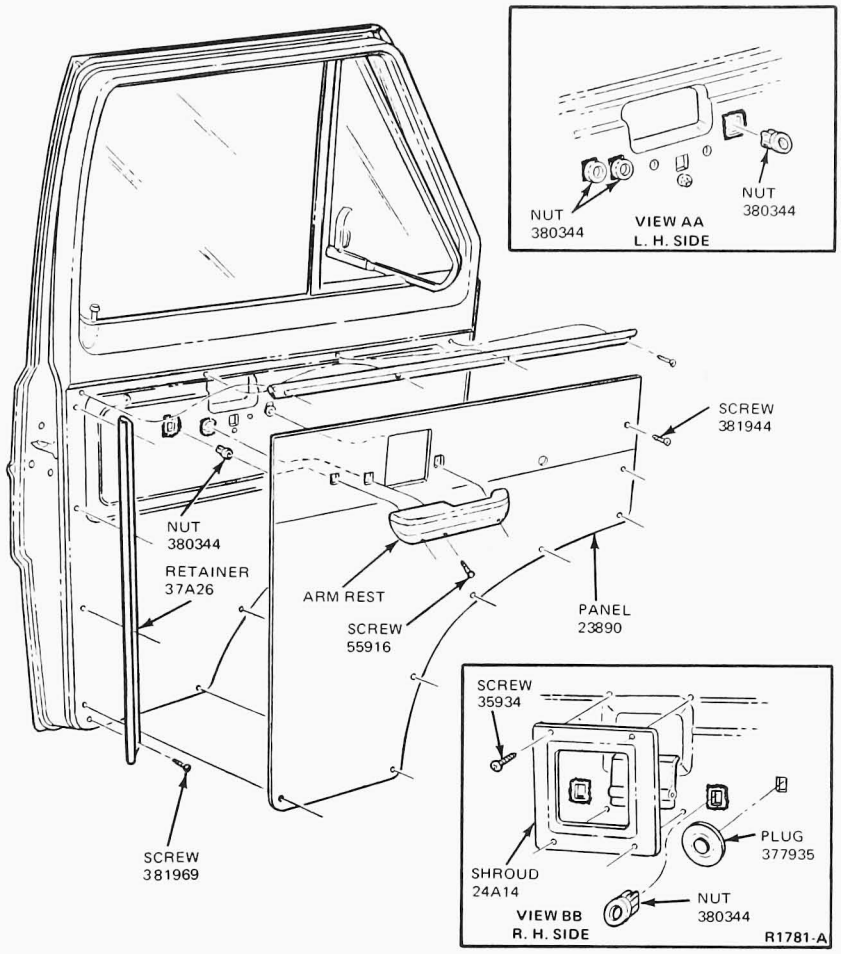

FIG. 2 Econoline Door Trim Panel Installation

remove the metal panel from the door (Fig. 3).

Installation

1. Make sure that the spring nuts are properly positioned around the metal panel opening in the door. Position the sealer to the perimeter of the metal panel, install the panel to the door, and secure with the retaining screws (Fig. 3).
2. On models equipped with a trim moulding assembly, position the moulding to the metal panel and snap it into place. If the door is also equipped with a trim panel assembly, position the trim panel to the metal panel first; and, then, secure the trim panel in place by installing the trim moulding (Fig. 3).
3. If so equipped, install the arm rest assembly and retaining screws.

F-SERIES

The door trim panel installation is shown in Fig. 6. To remove the trim panel, remove the finger tip plate screws. Remove the window regulator and door remote handle. Then, unsnap the 8 retainer clips around the perimeter of the trim panel. The clips are located as follows: three along the top and bottom and one at each end (Fig. 6).

SLIDING DOOR TRIM PANEL

ECONOLINE

Remove the retaining screws and remove the panel (Figs. 4 and 5).

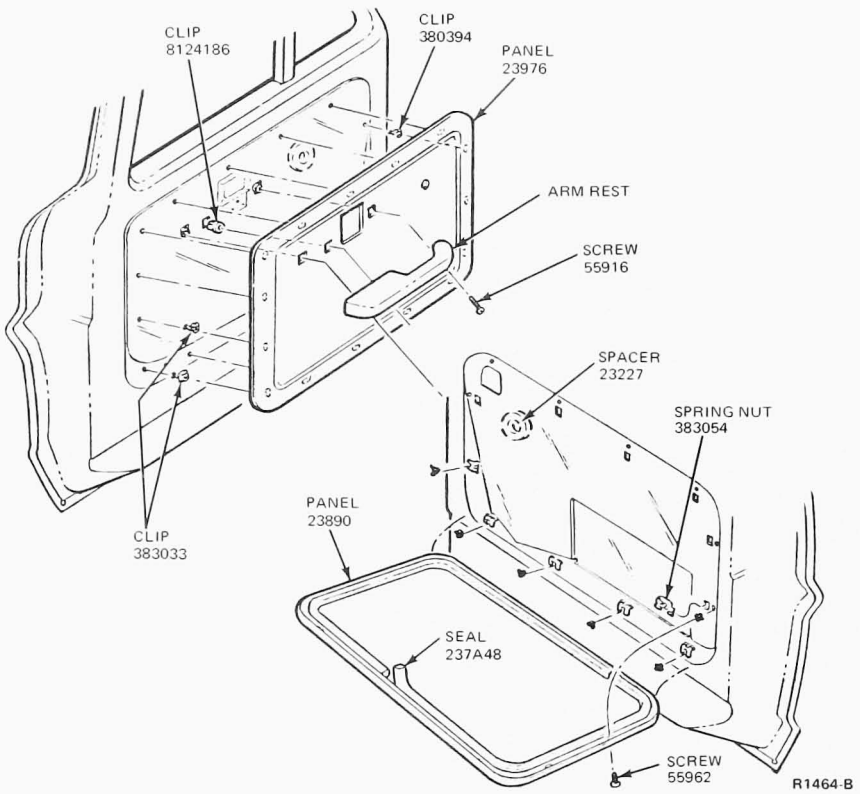

FIG. 3 Door Trim Panel Installation—Except Bronco and Econoline—Typical

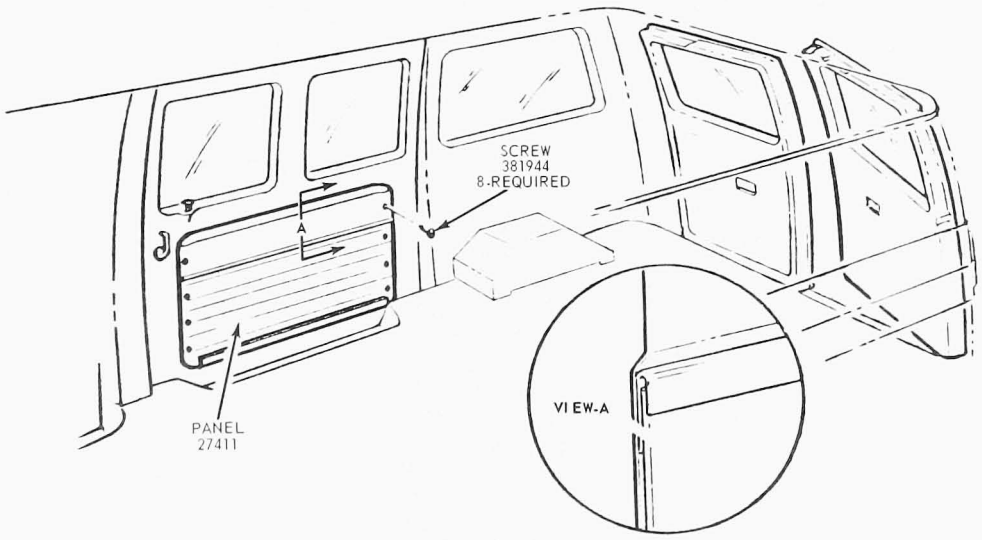

FIG. 4 Sliding Cargo Door—Trim Panel—Econoline

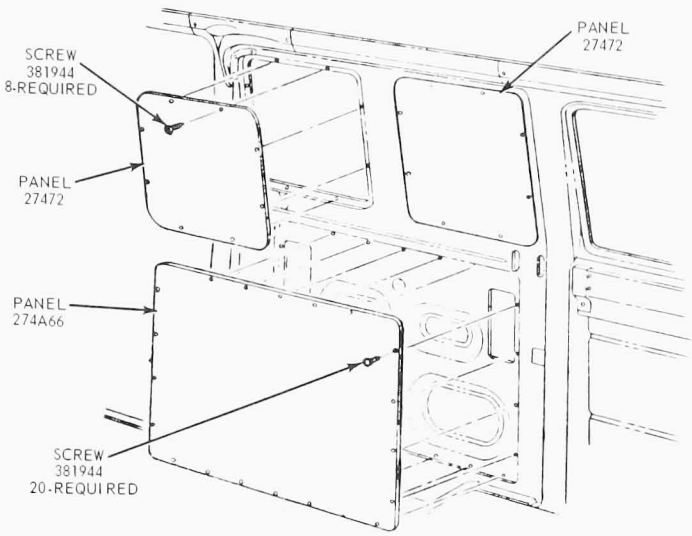

FIG. 5 Sliding Cargo Door—Trim Panels—Econoline

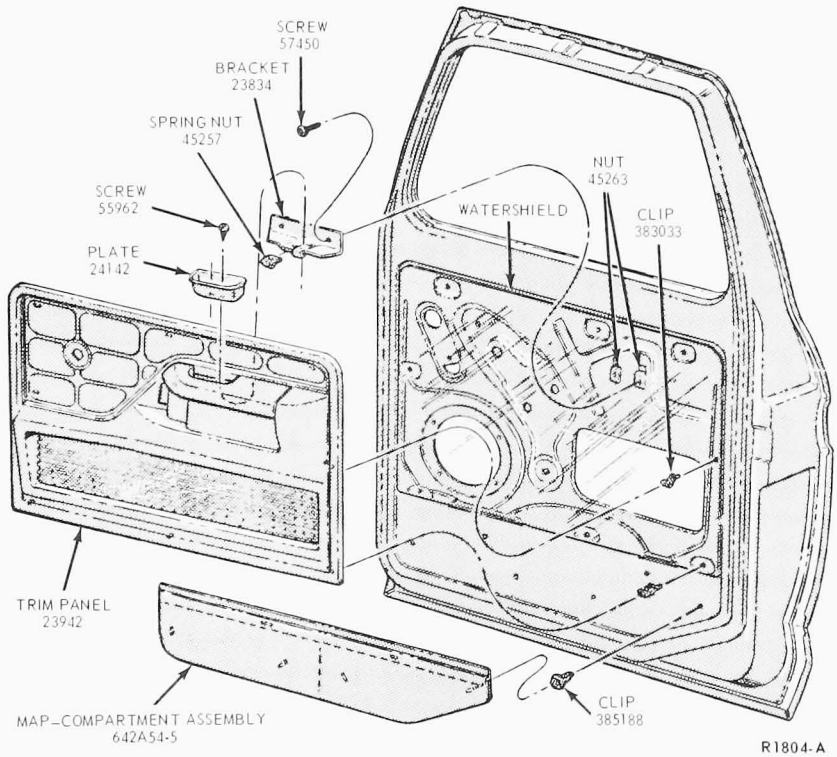

FIG. 6 Door Trim Panel Installation—F-Series

PART 45-11 Quarter Trim Panels

Applies To Econoline Only

REMOVAL AND INSTALLATION

QUARTER TRIM PANEL

ECONOLINE

Since all of the interior trim panels are retained to the body panels with screws and/or metal strips, the Removal and Installation procedures are obvious. Access to some of these panels, however, requires prior removal of other parts. The pertinent removal procedures are outlined as follows:

Before removing the left side trim panel, slide the driver's seat forward.

Before removing the right side trim panel, remove the right seat assembly from the vehicle (Group 41).

BACK WINDOW TRIM—UPPER PANEL

Econoline

Remove the two retaining screws, and remove the dome light glass and lens.

SIDE TRIM PANELS

Front and center—trim panel, left side. Remove the center passenger seat.

Rear left side—Remove the rear passenger seat.

Right rear side—Remove the rear passenger seat and the spare wheel and tire (For Seat Removal, See Group 41).

PART 45-16 Mouldings

Applies To Econoline Only

REMOVAL AND INSTALLATION

MOULDINGS

ECONOLINE

The installation of the fiberglass interior mouldings are shown in Fig. 1. In most instances, one moulding overlaps another moulding. If this condition is found, it will be necessary to loosen or remove the overlapping moulding before removal of the desired moulding. Also, the window latch retaining screws must be removed (if so equipped) to replace the window moulding.

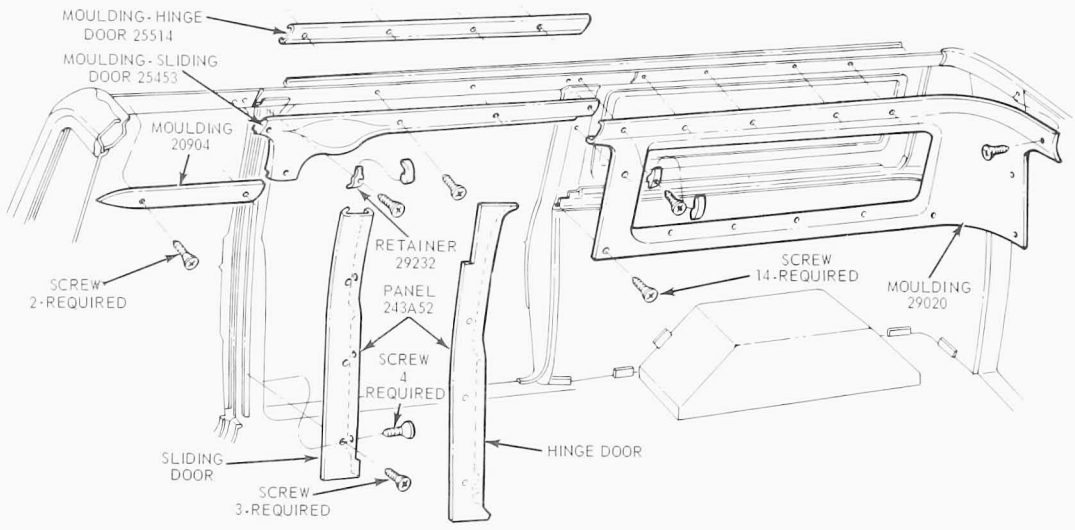

FIG. 1 Interior Fiberglass Mouldings—Econoline

PART 45-26 Carpets and Floor Mats

REMOVAL AND INSTALLATION

CARPETS AND FLOOR MATS

On vehicles equipped with a floor shift, remove the gear shift lever boot and retainer assembly before removing the mat or carpet, (if so equipped).

Remove all mat or carpet retaining screws. Remove the right and left door sill scuff plates and remove the mat or carpet.

PART 45-41 Headlining

REMOVAL AND INSTALLATION

ECONOLINE

1. Remove the trim panel retaining screws located at the inside centerline of the vehicle.
2. Unsnap the trim panel retainers. Unscrew the screws retaining the forward trim panel section to the roof inner panel.
3. Bow each trim panel section downward at the center of the vehicle and remove the trim panel from the retaining clips.
4. Position each trim panel section in the retaining clips. Snap the trim panel retainers in place. Install the screws that retain the trim panel forward section to the roof inner panel.
5. Install the retaining screws at the centerline of the vehicle.

BRONCO

Removal

The roof headlining is divided into two panels, front and rear. The two panels join at the headlining front support to which they are held by a retainer that extends across the width of the panels. The rear panel is also held to the headlining rear support by two screws. Both panels are retained by screws around their perimeters (Fig. 1).

To remove either panel, first remove the headlining retainer (4 screws).

To remove the front panel, remove seven retaining screws (3 at each side rail and 1 at the windshield header).

To remove the rear panel, first remove the panel-to-rear support screws at right and left center of the panel; and then remove the fourteen perimeter retaining screws (4 along each side rail and 6 across the rear window header).

Installation

1. Position the rear trim panel (Model 98) to the vehicle and install the retaining screws.
2. Position the front trim panel to the vehicle and install the retaining screws.
3. Fasten the roof moulding in position with the retaining screws.

F-SERIES

The headlining is held to the roof panel with trim mouldings as shown in Fig. 2. To remove headlining, remove 12

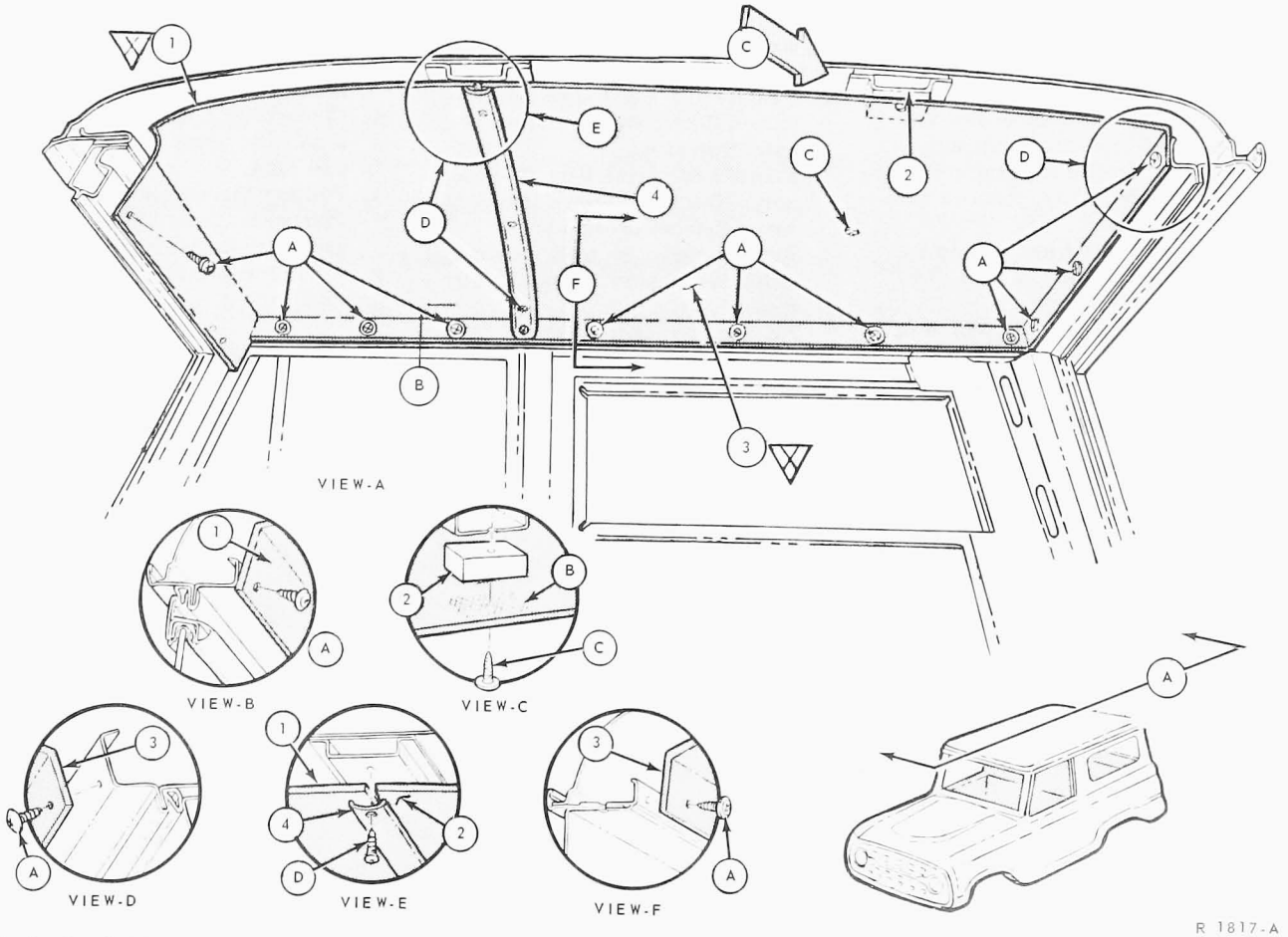

FIG. 1 Roof Trim Panel Installation—Bronco

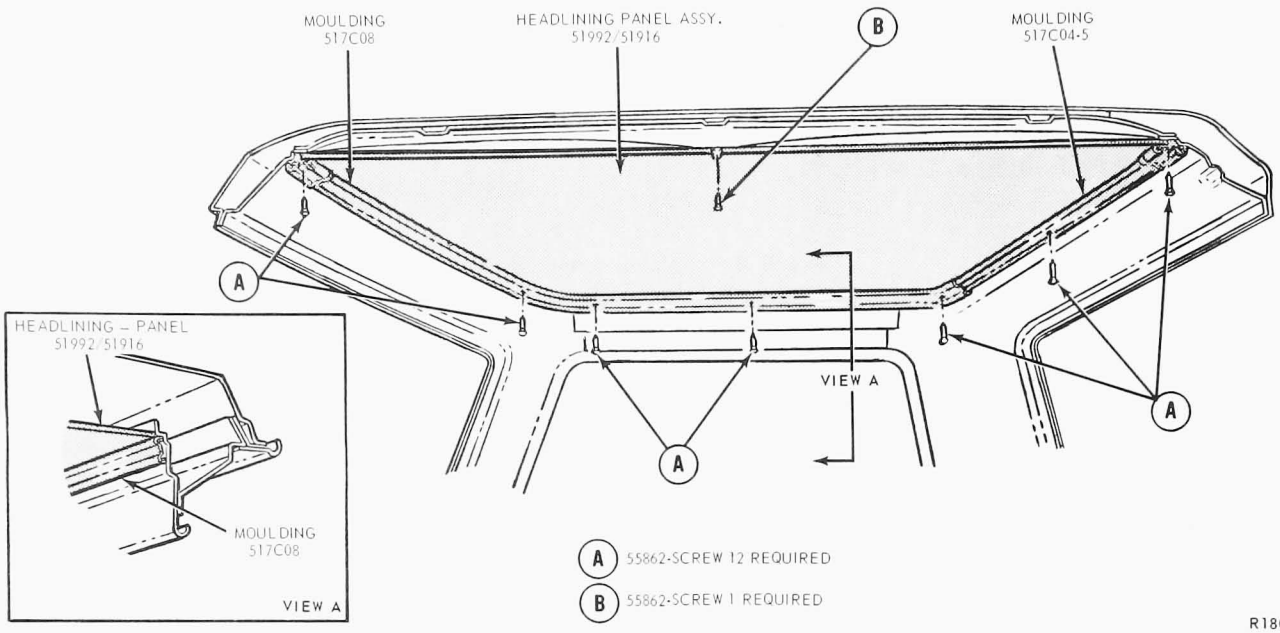

FIG. 2 Roof Trim Panel Installation—F-Series

moulding attaching screws and remove the mouldings and headlining.

L-SERIES

1. Remove the coat hook and rear corner trim moulding.
2. Unsnap or remove screws and remove the roof trim mouldings.
3. Remove the roof trim panel retaining screws and remove the roof trim panel.
4. Position the roof trim panel to the roof and install the roof trim panel retaining screws.
5. Position and install the roof trim mouldings (Fig. 3 and 4).
6. Install the roof corner moulding and the coat hook.

C-AND W-SERIES

Removal

1. Start at one side and work across. Remove the side panel retaining screws and the side panel (Fig. 3 and 4).
2. Remove the metal strip retaining screws, the metal strip, and the roof outer trim panel.
3. Remove the dome light (C-Series only). Disconnect the dome light wires. Remove the coat hook.
4. Remove the other metal retaining strip, and remove the roof center trim panel.
5. Remove the retaining screws from the remaining side panel, and remove the side panel and the remaining roof outer trim panel.

Installation

1. Position the roof side trim panel and install the retaining screws.
2. Position the roof outer trim panel, and clinch the retaining tabs.
3. Position the center panel, and clinch the retaining tabs.
4. Connect the dome light wires, and install the dome light. Install the coat hook.
5. Position the remaining roof outer trim panel, clinch the retaining tabs, and install the other roof side panel.
6. Install the metal retaining strips.

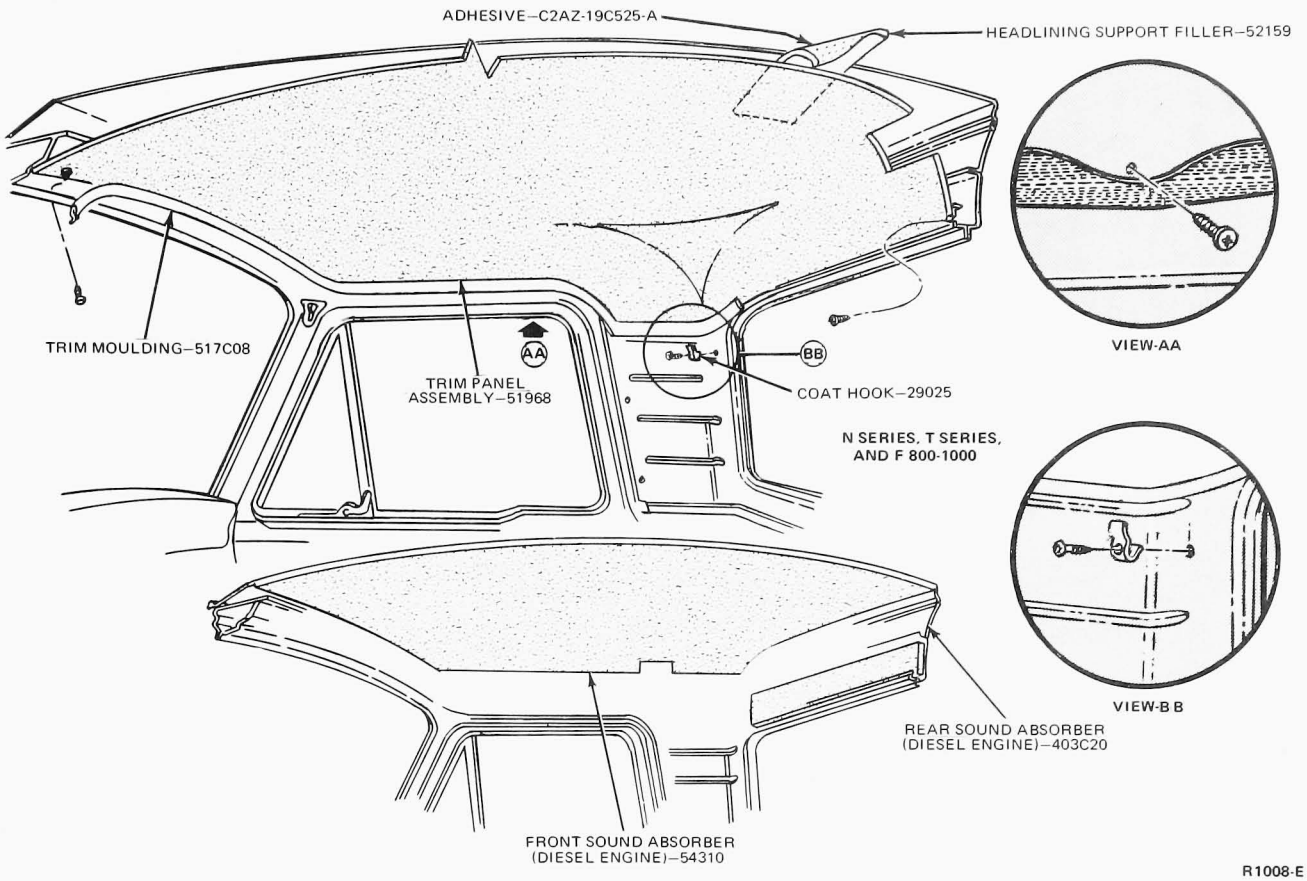

FIG. 3 Roof Trim Panel Installation—L-Series

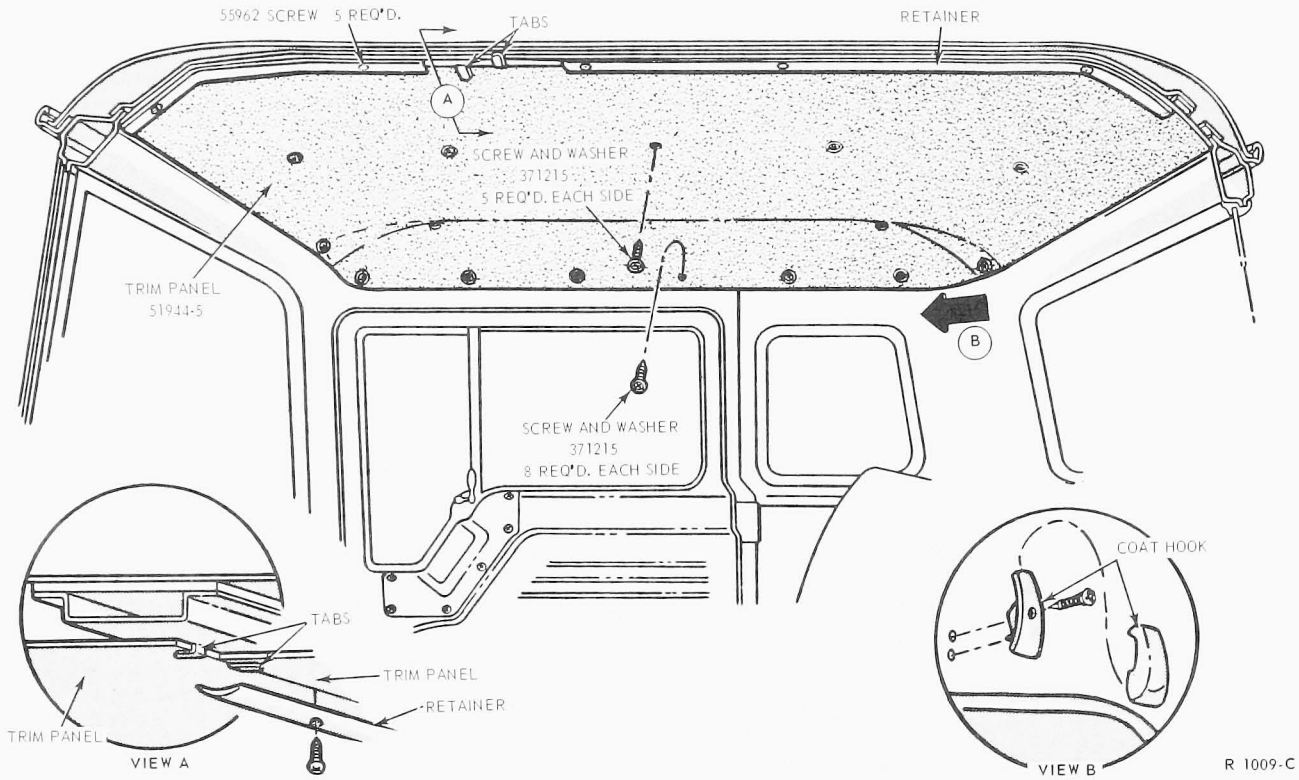

FIG. 4 Roof Trim Panel Installation—Tilt Cab

PART 45-61 Instrument Panel Pad

COMPONENT INDEX Applies to Models as Indicated	Bronco	Econoline	F-Series	L-Series	C-Series
REMOVAL AND INSTALLATION	61-02	61-01	61-02	61-03	61-02

A page number indicates that the item is for the vehicle(s) listed at the head of the column.
N/A indicates that the item is not applicable to the vehicle(s) listed.

REMOVAL AND INSTALLATION

INSTRUMENT PANEL PAD

ECONOLINE

Removal

1. Open the hood, disconnect the battery cables and remove the battery to gain access to the heater attaching bolts.
2. Drain the cooling system into a container and save.
3. Remove the heater hose cover at the heater case (two screws).
4. Disconnect the wires at the heater resistor, heater motor and the auxiliary solenoid (if so equipped).
5. Remove the heater hoses from the heater assembly.
6. Remove the three heater-to-dash attaching bolts and pull the heater away from the dash panel to gain access to the heater control cable.
7. Disconnect the heater control cable, remove the heater assembly and place it on the bench.
8. Remove the instrument panel pad retaining nuts (six), and remove the pad (Fig. 1).

Installation

1. Position the pad to the instrument panel and install the pad retaining nuts (six).
2. Position the heater assembly to the dash board, connect and adjust the heater control cable and install the heater-to-dash attaching bolts (three).

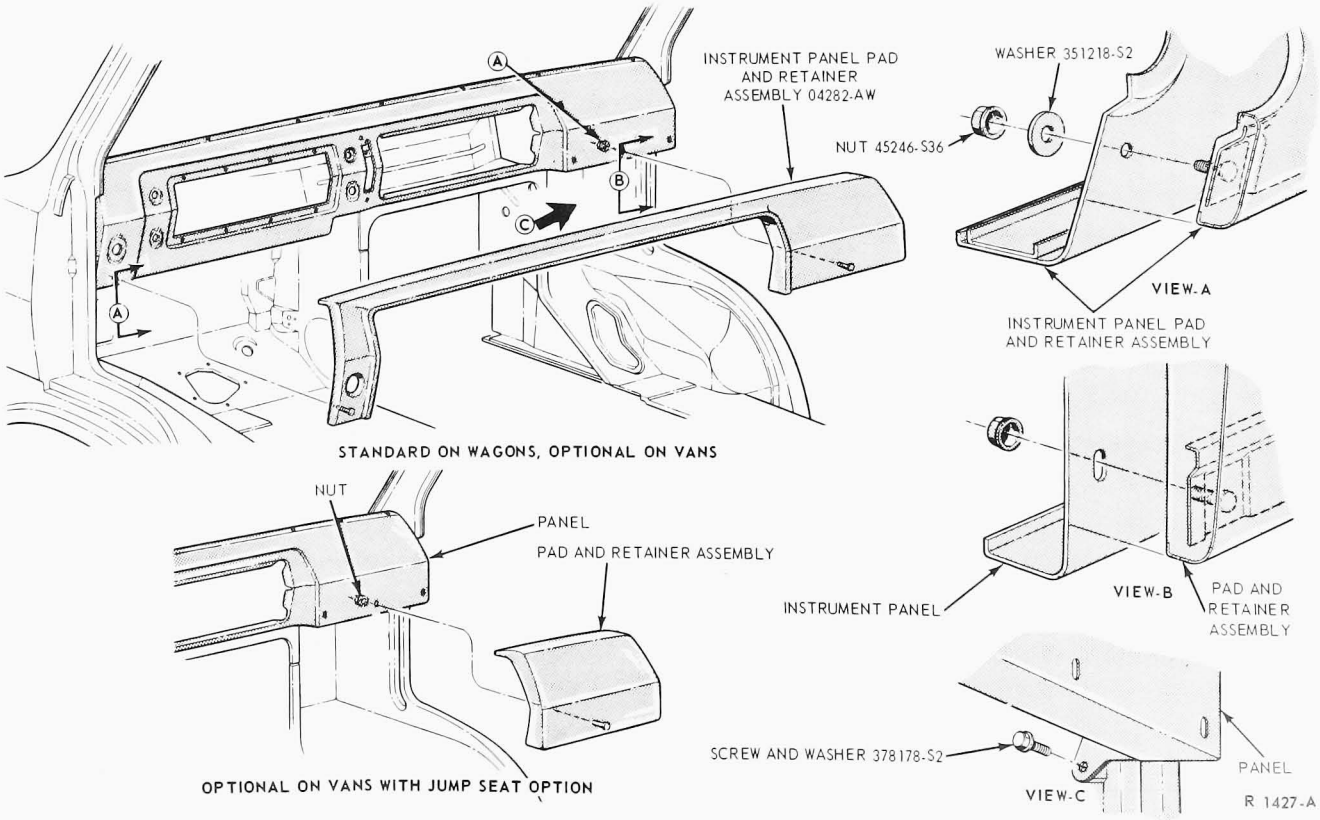

FIG. 1 Instrument Panel Pad Installation— Econoline

3. Install the heater hoses to the heater assembly.
4. Connect the wires to the heater resistor, heater motor and the auxiliary solenoid (if so equipped).
5. Install the heater hose cover to the heater case (two screws).
6. Fill the cooling system.
7. Install the battery and connect the cables.

BRONCO

If necessary to replace the instrument panel pad, remove the two windshield-to-body retaining latch knobs and the nine screws which retain the pad assembly to the instrument panel. Then, remove the pad.

F-100 THROUGH F-350

The instrument panel pad is attached to the instrument panel with ten nuts at 5 locations as shown in Fig. 2. To remove the pad, it is necessary to remove the instrument cluster (Group 33) center, right hand, left hand. A/C registers (if so equipped) and the glove box liner to gain access to the ten retaining nuts.

F-500 THROUGH F-750

Removal

1. Disconnect the negative battery ground cable.
2. After removing the retaining screw, pull the instrument cluster away from the instrument panel.
3. Remove the windshield defroster covers.
4. Remove the 14 attaching nuts and remove the pad and retainer assembly (Fig. 3).

Installation

1. Install the new pad and retainer assembly to the instrument panel with the pad studs entering the corresponding holes in the panel, and install the 14 retaining nuts (Fig. 3).
2. Install the windshield defroster covers.
3. Install the instrument cluster and connect the battery cable.

C-SERIES

Removal

1. Disconnect the negative battery ground cable.
2. After removing the retaining screws, pull the instrument cluster away from the instrument panel. If the vehicle has a radio, remove the speaker grille and the speaker.
3. Remove the 7 retaining screws and the windshield lower garnish moulding (Fig. 4).
4. Unsnap the left moulding (3 clips), the right moulding (7 clips), and remove the instrument panel pad.

Installation

1. Thoroughly clean the instrument panel area to be covered.
2. If the truck has a radio, position the cover on the instrument panel and, working from underneath, locate the speaker retaining screw holes on the cover. Remove the cover.
3. Using the screw hole markings as a guide, position the grille on the cover and mark the necessary grille opening on the cover. Cut out the opening.

Position the cover temporarily, marking the cover and the instrument panel at several locations for centering the cover.

4. Using a wide brush, apply Part No. 19C525 cement to the edges of the instrument panel and instrument panel pad. This cement is very fast drying, and the cover must be exactly positioned immediately after application of the cement.
5. Press the cover into position on the instrument panel.
6. If equipped with a radio, install the speaker and grille using three-inch screws.
7. Install the instrument cluster and then follow the appropriate procedure below to finish the installation.

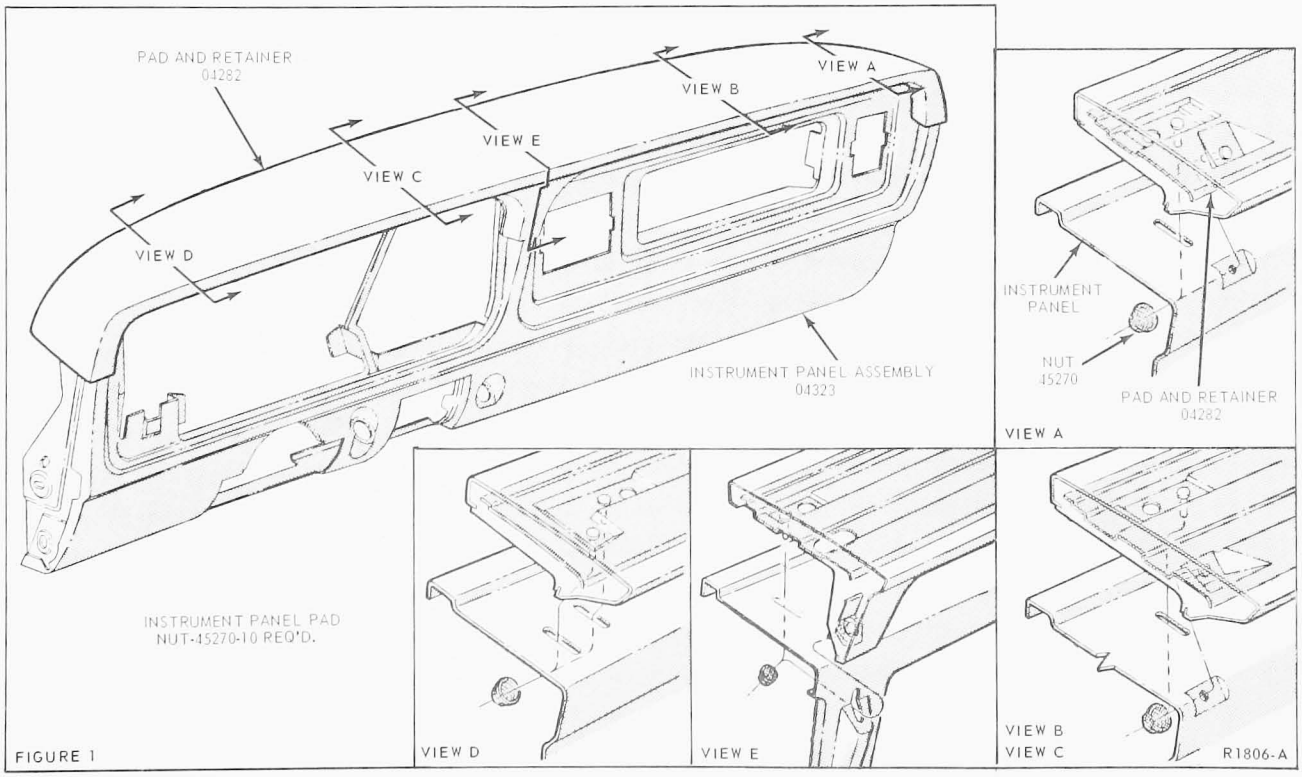

FIG. 2 Instrument Panel Pad Installation—F-100 Through F-350

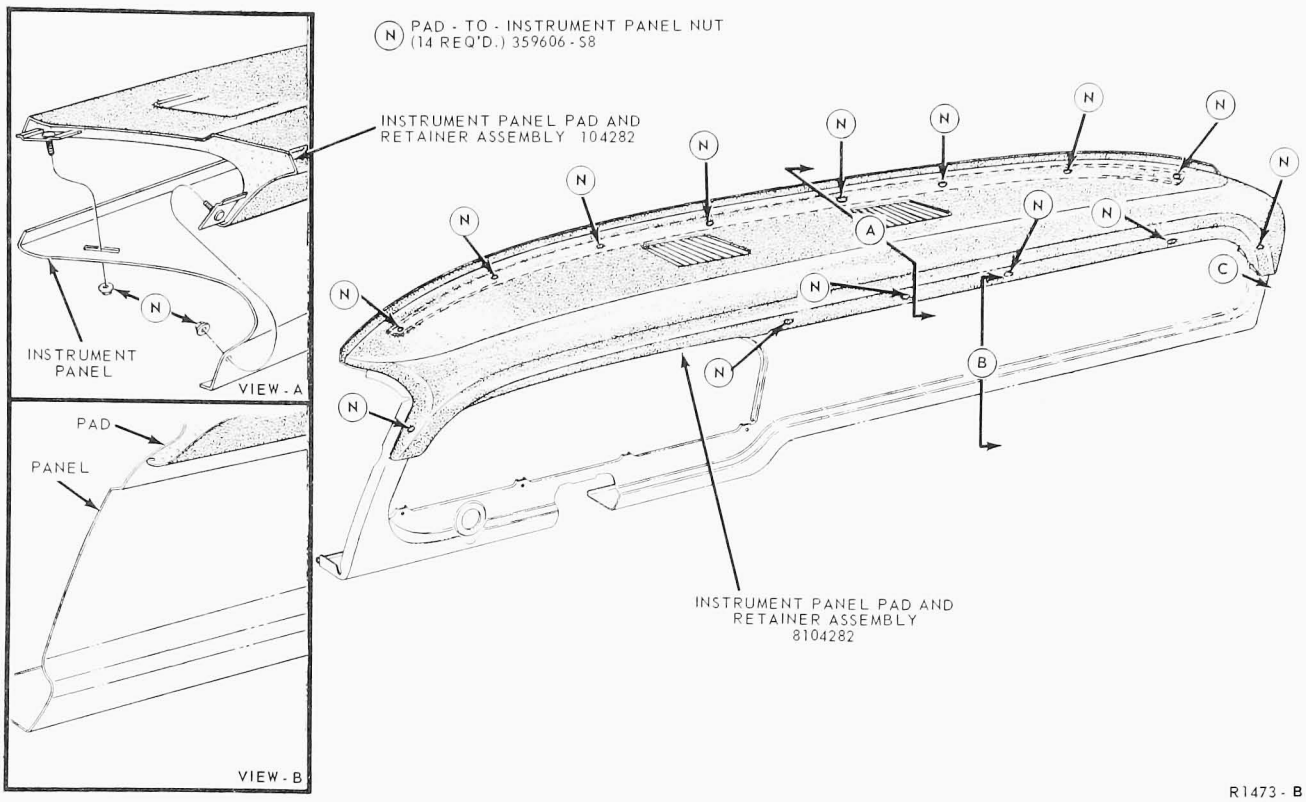

FIG. 3 Instrument Panel Pad and Retainer Assembly—F-500 Through F-750

8. Position the five windshield lower garnish moulding supports along the forward edge of the cover (Fig. 4), position the garnish moulding on the supports and secure with the seven retaining screws.
9. Position the retaining clips evenly in the safety cover lower mouldings, and locate the clip holes on the edge of the cover.
10. After drilling 1/8-inch holes through the cover and the instrument panel, snap the lower mouldings in place: right moulding (7 clips), left moulding (3 clips).
11. Connect the battery.

L-SERIES

The instrument panel and pad arrangement is installed as three different components: the right pad and retainer assembly on the right portion of the instrument panel; the right cluster opening pad and retainer assembly to the right of the cluster opening; and the left finish panel to the left of the cluster opening. Remove and install any one of these components as illustrated in Figure 5.

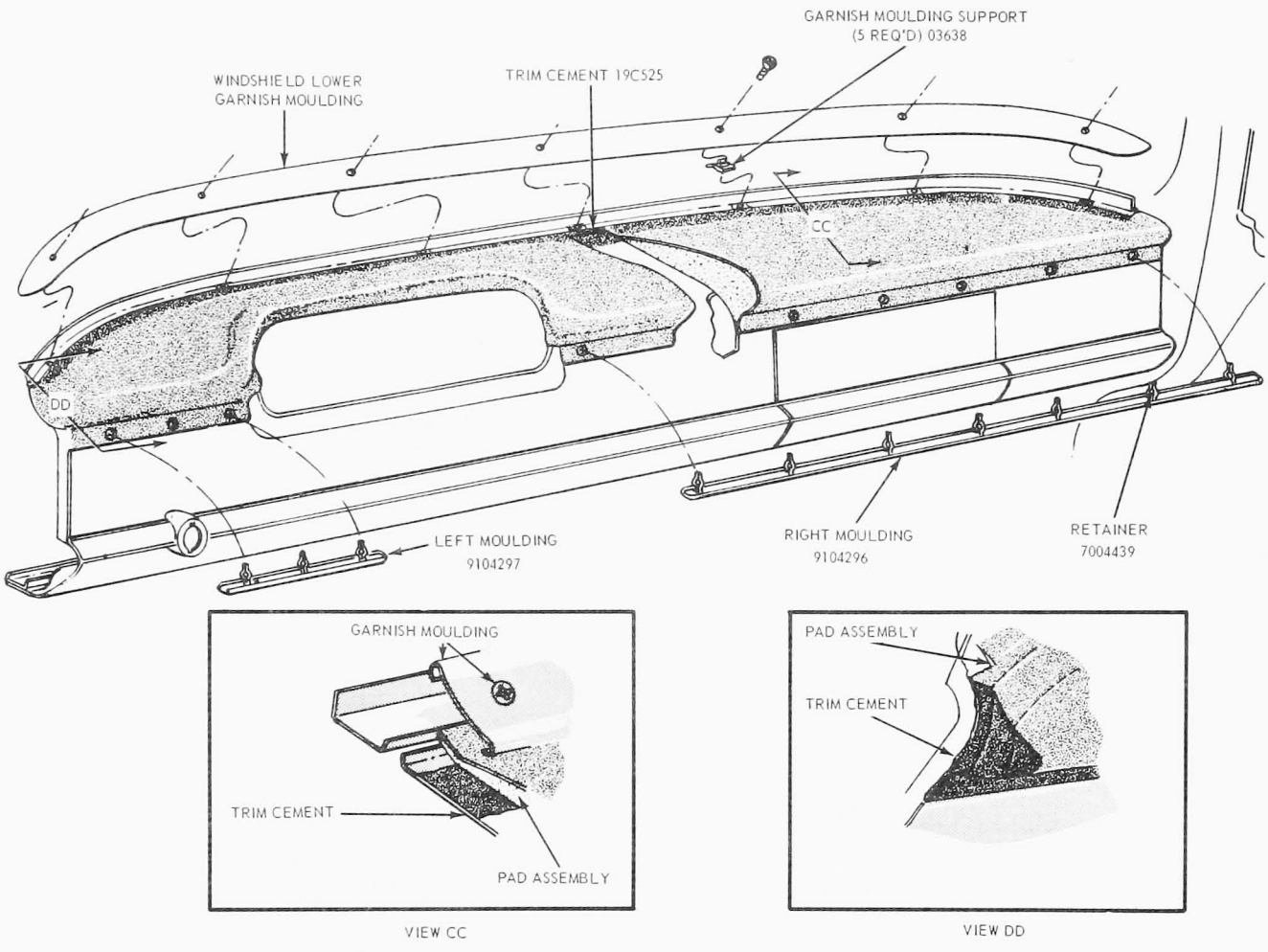

FIG. 4 Instrument Panel Pad Installation—C-Series

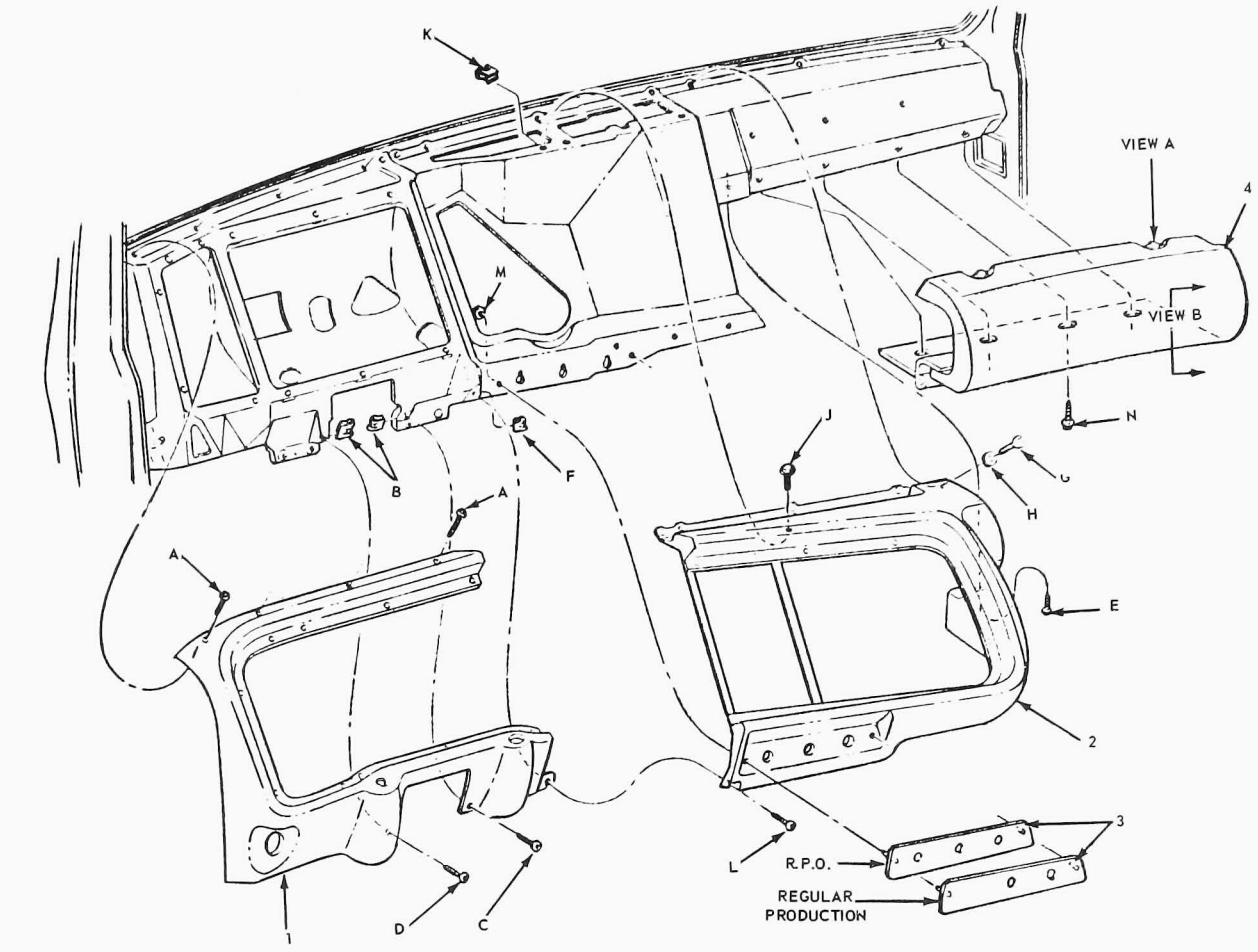

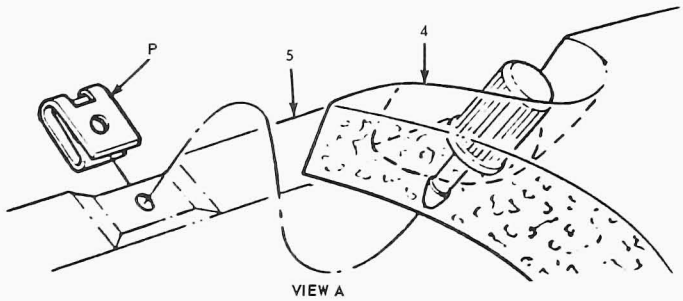

VIEW A

RETAINER TO PANEL ASSEMBLY
FOR PAD AND RETAINER ASSEMBLY LOCK



VIEW B

PAD AND RETAINER ASSEMBLY
HINGE TO PANEL ASSEMBLY

1 - (80045091) PANEL - INSTRUMENT PANEL CLUSTER OPENING FINISH L.H.
- A - (57241-S2) SCREW - 4 REQD.
- B - (384262-S2) NUT - SPRING - 2 REQD.
- C - (57441-S2) SCREW - 1 REQD.
- D - (57443-S2) SCREW - 1 REQD.

2 - (90045084) PAD & RETAINER ASSY. - INSTRUMENT PANEL CLUSTER OPENING.
- E - (57259-S2) SCREW - 1 REQD.
- F - (384262-S2) NUT - SPRING - 2 REQD.
- G - (57358-S2) SCREW - 1 REQD.
- H - (34877-S2) WASHER - FINISHING #8 - 1 REQD.
- J - (57259-S2) SCREW - 1 REQD.
- K - (384262-S2) NUT - SPRING - 1 REQD.
- L - (57441-S2) SCREW - 1 REQD.

3 - (10A860-KW) REG. PROD.
(10A860-JW) R.P.O.
PLATE - INSTRUMENT CLUSTER CONTROL MOUNTING (LINE HAUL).
- M - (374566-S36) NUT - 2 REQD.

4 - (9004282-DW) REG. PROD.
(9004282-CW) R.P.O. A/C
PAD & RETAINER ASSY. - INSTRUMENT PANEL R.H.
- N - (57175-S2) SCREW & WASHER ASSY. - 4 REQD.
- P - (383332-S) RECEPTACLE - STUD.

5 - INSTRUMENT PANEL ASSEMBLY

R1519-A

FIG. 5 Instrument Panel Pad Installation—Typical L-Series

TOPS

GROUP 46

PART 46-50 Pick-up Box Cover

COMPONENT INDEX	Page	COMPONENT INDEX	Page
ADJUSTMENTS		REMOVAL AND INSTALLATION	
Liftgate Latch Striker	50-02	Cover Assembly	50-03
		Screen	50-03
DESCRIPTION	50-01	Window Glass	50-03

DESCRIPTION

The pickup box cover (Fig. 1) is designed for F—100 through F—350 trucks with eight foot boxes and 133 and 140 inch wheel bases. The box covers come in standard and deluxe models. Features of the standard model include fiberglass construction, tinted glass in side and rear windows, clear glass in the front window, a T-handle liftgate latch with lock and textured white paint. In addition, deluxe model features include sliding side windows with screens, bright moldings around side and rear windows, a roof vent, a dome light and two-tone paint.

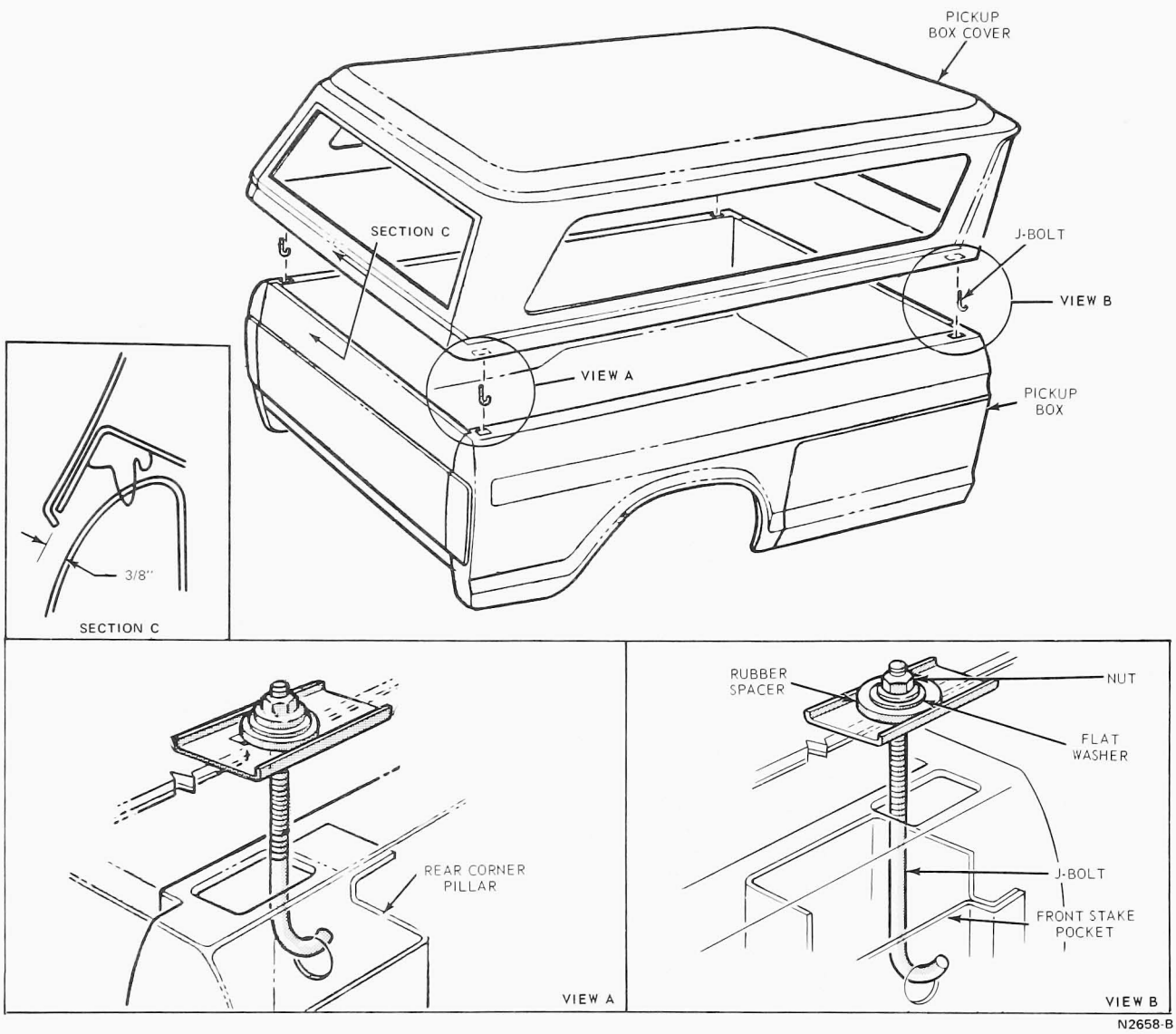

FIG. 1 Pickup Box Cover

ADJUSTMENTS

LIFTGATE LATCH STRIKER

The striker-latch relationship may change after installing or removing the cover causing a poor weatherseal or latch misalignment. To adjust the strikers:

1. Outline the strikers on the body with a pencil to record the existing position.
2. Loosen the attaching screws and adjust the strikers forward (to correct loss of seal) or rearward (to gain latch engagement) as required.
3. When strikers are properly positioned, tighten the attaching screws (7 to 11 ft-lb).

REMOVAL AND INSTALLATION

PICKUP BOX COVER

Removal

1. Disconnect the electrical wiring (two-way connector) at the left front corner of the Pickup Box (Deluxe Model only).
2. Remove the nuts, rubber spacers and flat washers from all four J-bolts (Fig. 1).
3. Unhook the J-bolts from the holes in the corner stake pockets and remove them through the cover mounting holes.
4. Remove the Pickup Box Cover from the truck.

Installation

1. Clean the top surfaces of the Pickup Box side and front panels and tailgate to remove any abrasive materials which may have collected.
2. With the liftgate closed, position the Pickup Box Cover on the Pickup Box so the cover is centrally located side to side and the bottom edge of the liftgate is no less than 5/16 inch away from the tailgate.
3. Insert the four J-bolts down through the cover mounting holes and hook them into the holes in the walls of the corner stake pockets (Fig. 1).
4. Assemble a rubber spacer, flat washer and nut (in that order) on each J-bolt. Tighten the nuts sufficiently to compress each spacer 3/16 inch.
5. Connect the electrical wiring (two-way connector) at the left front corner of the Pickup Box (Deluxe Model only).

SLIDING SIDE WINDOW ASSEMBLY

Removal

1. Remove the entire weatherstrip, window and frame assembly from the Pickup Box Cover (Fig. 2).
2. Place the window assembly on a work bench and remove the mouldings.
3. Remove the weatherstrip.
4. Place a knife between the stationary glass and its frame and cut the double-backed adhesive tape to separate the window from the frame.
5. With the stationary glass removed, the sliding glass can be removed by flexing the frame sufficiently to remove the glass.
6. Service the handle by removing the one attaching screw. The latch housing and latch housing retainers are cemented to the glass. Remove by using a knife and separating the subject part and the glass. **When removing the latch housing, note the position of the flange to ensure proper positioning during subsequent reinstallation.**
7. The glass opening cover is secured to the glass with adhesive and a retaining flange that is snapped in the glass hole. To remove the cover, taking care not to break the glass, carefully chip away the retaining flange using a screwdriver and hammer. Then, with a knife, cut the adhesive bond between the glass and the cover. **When removing the glass opening cover, note the position of the flange to ensure proper positioning during subsequent reinstallation.**
8. The vertical side glass weatherstrip retainer is attached to th glass with double-backed adhesive tape. To remove the weatherstrip retainer, insert a knife between the retainer and the glass and cut the double-backed adhesive tape. The vertical weatherstrips are retained in grooves of the retainer and will freely slide from the ends of the grooves.

Installation

Installation of the sliding window components can generally be accomplished in the reverse order of removal, however, some special procedure will be necessary.

1. When installing the vertical side glass weatherstrip retainer, clean the glass and retainer mating surfaces with alcohol or wax and grease remover to ensure that they are free from dirt, grease, etc. Then, with the surface clean, apply Double-Backed adhesive tape to the back side of the retainer and install it to the glass as shown in Fig. 3. **Ensure that the tape does not extend beyond the edges of the retainer.**
2. To install the glass opening cover, use structural two-part epoxy adhesive to cement the cover to the glass paying particular attention to the position of the raised portion of the flange as shown in Fig. 4. Then, snap the glass latch opening plate (Fig. 4) into the cover with a daub of ESB-M2G198-A adhesive.
3. To install the latch housing and/or latch housing retainers, use structural two part epoxy adhesive to cement the subject parts to the glass surface paying particular attention to the position of the raised portion of the latch housing flange as shown in Fig. 4.
4. When installing the stationary glass to the frame, clean the mating surfaces of the glass and frame with alcohol or wax and grease remover to ensure they are free of dirt, grease, etc. Then, with the surfaces clean, apply double-backed adhesive tape to the outside front half of the window frame and install the stationary glass as shown in Fig. 3. **Ensure that the tape does not extend beyond the edges of the frame and the glass is located on the frame so that the distance from the edge of the glass to the edge of frame is constant.**
5. Installation of the window mouldings (Deluxe Model) requires the drawcord method; refer to Group 43 for techniques of a typical installation.
6. Apply a bead of sealer to the periphery of the window opening (on the Pickup Box Cover) as shown in Fig. 2.
7. To install any of the window and weatherstrip assemblies into the pickup box cover, use the drawcord installation method outlined for Windshields in Group 43.

SLIDING WINDOW SCREEN

Removal

With the window fully open, slide the screen forward and lift out.

Installation

With the window fully open, slide the screen rearward while feeding the screen clips into the groove in the screen frame (Fig. 5).

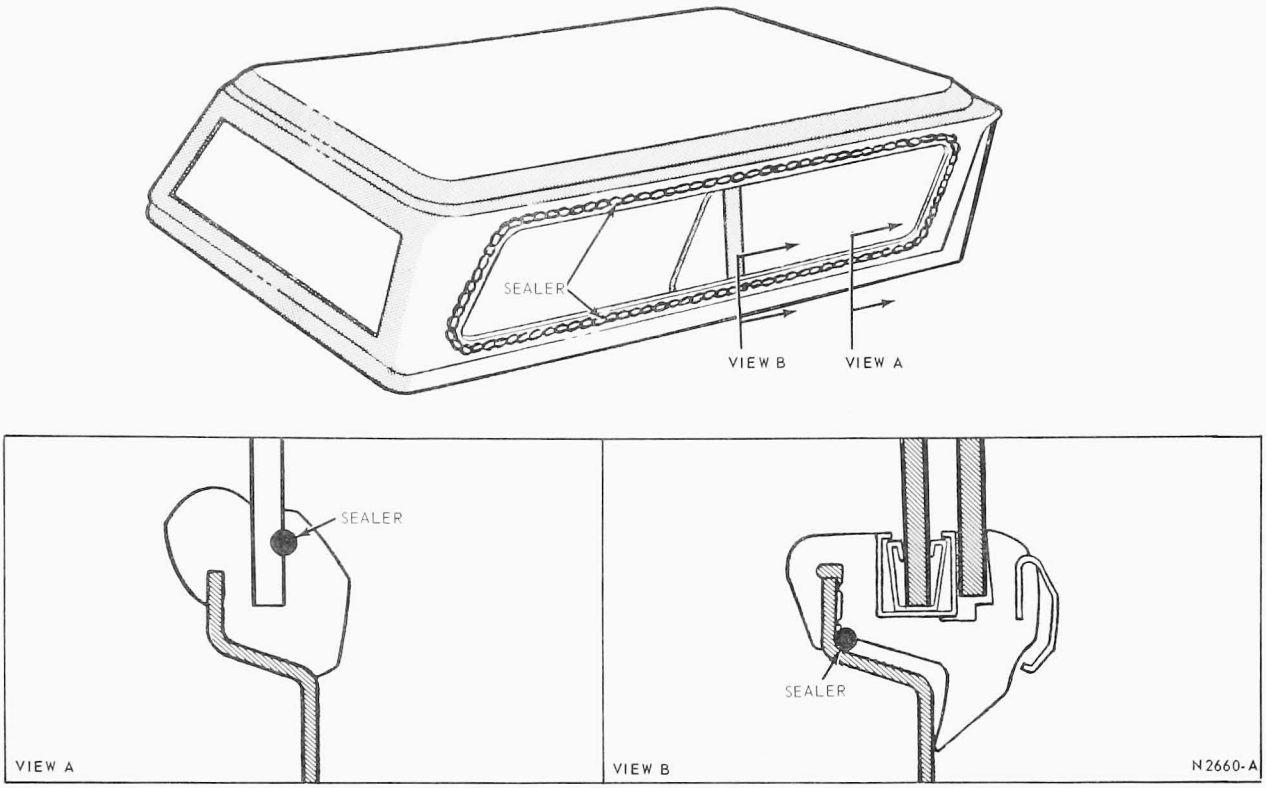

FIG. 2 Side Glass Installation

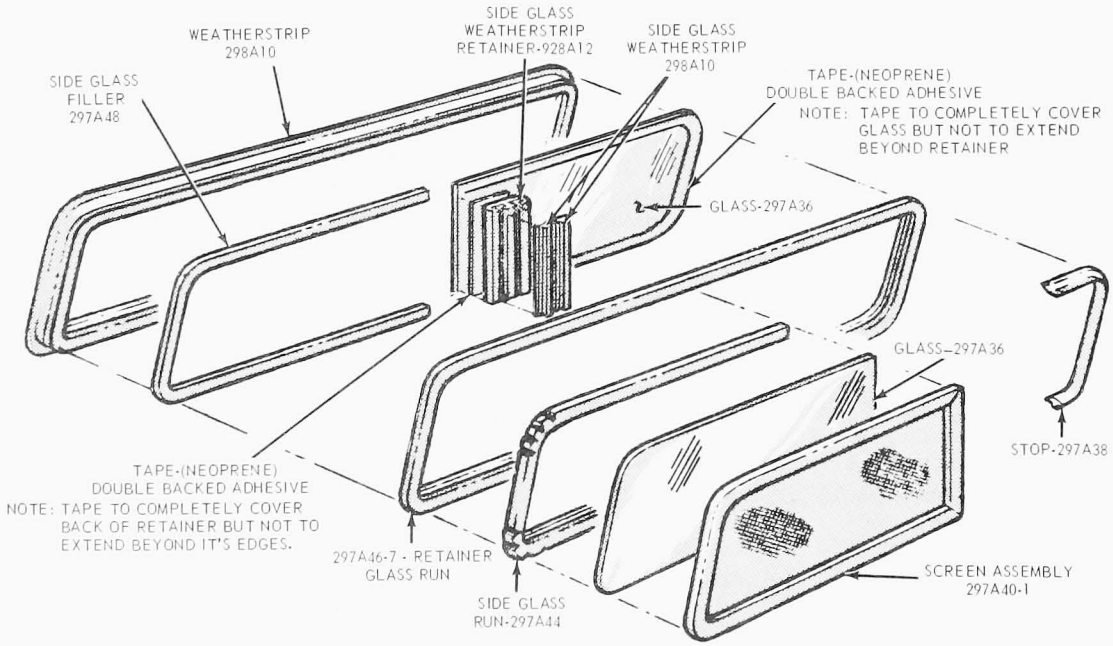

FIG. 3 Pickup Box Cover Side Glass—Disassembled

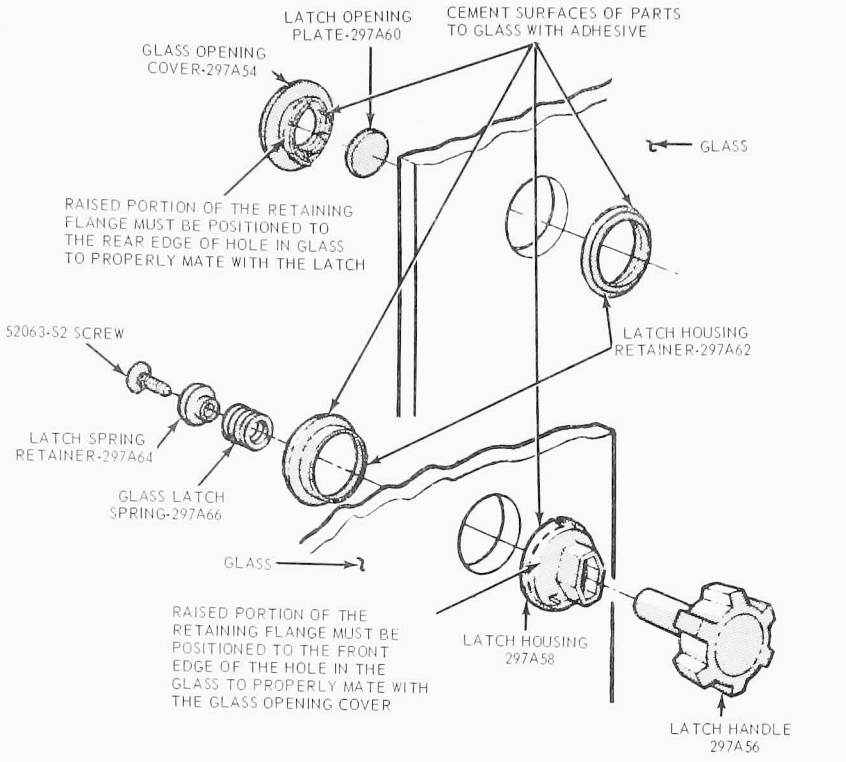

FIG. 4 Sliding Window Handle and Cover

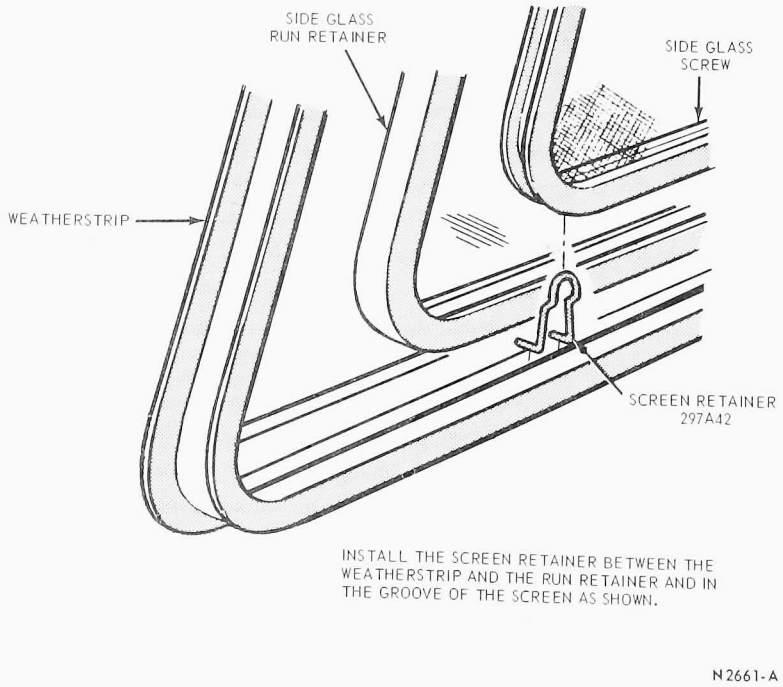

FIG. 5 Sliding Window Screen Installation

Body Shell, Exterior Trim, Frame and Underbody

GROUP 47

PART 47-01	PAGE	PART 47-34	PAGE
Body shell, Exterior Trim, Frame and Underbody – General Service	47-01-01	C-Series	47-34-01
PART 47-30		**PART 47-40**	
F-100 Through F-350	47-30-01	W-Series	47-40-01
PART 47-31		**PART 47-51**	
F- and B-500 Through 750, 6000 and 7000	47-31-01	Bronco	47-51-01
PART 47-32		**PART 47-52**	
L-Series	47-32-01	Econoline and Club Wagon	47-52-01

PART 47-01 Body Shell, Exterior Trim, Frame and Underbody - General Service

GENERAL INFORMATION

TYPE OF SEALERS AND APPLICATION

Since many sealers are used in the assembly of the truck, the following all-purpose sealers have been selected for service use. The method and points of application are shown in each applicable group.

CAULKING CORD—19560

This sealer has a plastic base with an asbestos filler, is heavy bodied and is commonly known as perma-gum. It is used on spotweld holes, around mounding clips, and between two surfaces not sealed by a gasket. Apply the sealer with a putty knife.

TRIM CEMENT—19C525

This cement is recommended for body panel plastic water shield and on some soft trim installations. It is also useful for repair or replacement of other vinyl and rubber trim.

RUBBER CEMENT—19552

This quick-drying, strong, adhesive cement is designed to cement weatherstripping to doors, bodies, cowl ventilators, and the surrounding metal. Windows and windshields that are set in rubber, can be effectively sealed against leakage by flowing cement into affected areas.

Clean all grease, dirt, and old sealer from the surfaces to be cemented. Wash the surfaces thoroughly with a rag moistened with a suitable commercial cleaner. For best results, apply a medium coat of cement to both surfaces, allow it to dry until tacky, and then press both surfaces firmly together.

BODY SEALER 19562 (WHITE and/or BLACK)

This sealer does not run, is fast drying, and remains semi-elastic. The sealer can be used for seam sealing in such areas as the floor pan, wheelhouse, dash panel, running board, door openings, and drip rails. It can also be used to seal outside moulding clip holes, and for windshield and back window installation.

DIAGNOSIS AND TESTING

DUST AND WATER LEAKS

Remember, that the forward motion of the truck creates a slight vacuum within the body, particularly if a window or ventilator is partially open. Any unsealed crevice or small opening in the lower section of the body will permit air to be drawn into the body. If dust is present in the air, it will follow

Under certain conditions, water can enter the body at any point where dirt or dust can enter. Any consideration of water leakage must take into account all points covered under dust leaks.

To determine the exact location of a dust leak, remove the following trim from the cab; the cowl trim panel, the kick pads, and the floor mats.

Removal of the trim will reveal the location of most leaks. Seal these leaks, and road test the truck on a dusty road to make sure that all leaks are sealed. The entrance of dust is usually indicated by a pointed shaft of dust or silt at the point of entrance. After the road test, check for indications of a dust pattern around the door openings, cowl panel, and cowl side panel.

Sometimes leaks can be located by putting bright lights under the truck, with the above components removed, and checking the interior of the body at joints and weld lines. The light will show through where leaks exist.

FLOOR PAN PLUGS AND GROMMETS

Many plugs and grommets are used in the floor pan and dash panel. The floor pan plugs seal the various body bolt access holes.

If any plugs are missing or damaged, a dust or water leak may result. Such leakage may also occur around grommets used on the dash panel. When dust or water leaks are evident, these plugs and grommets should be checked for proper installation.

DRAIN HOLES

Drain holes are located on the underside of each door along the weld line of the inner and outer panels. If these holes become clogged with mud or road tars, water will collect inside the panels and rust the sheet metal from the inside. A sound of sloshing water in a door is an indication of this condition.

Check the drain holes regularly. Clean the drain holes of dirt and foreign material with a punch or screwdriver.

RATTLE ELIMINATION

Most rattles are caused by a loose bolt or screw. Foreign objects such as nuts, bolts or small pieces of body deadener in the door wells, pillars, and quarter panels are often the source of rattles. Door wells can be checked by carefully striking the underside of the door with a rubber mallet. The impact made by the mallet will indicate if loose objects are in the door well.

All bolts and screws should be tightened periodically. In the event that tightening the bolts and screws, located on such assemblies as the doors does not eliminate the rattles, the trouble is probably caused by **misalignment.** If this is the case, follow the adjustment and alignment procedures for these assemblies.

Rattles and squeaks are sometimes caused by weatherstripping and anti-squeak material that has slipped out of position. Apply additional cement or other adhesive, and install the material in the proper location to eliminate this difficulty.

ADJUSTMENTS

CHECKING BODY FOR MISALIGNMENT

To align or square up a body, take two opposite diagonal measurements between pillars. Use a measuring tram for these measurements. Take the measurements between reference points such as crease lines or weld joints which are diagonally opposite each other on the two pillars being measured. Since all measurements should be made from the bare metal, remove all interior trim from the checking points.

In some cases, it is difficult to obtain proper body alignment when repairing a body that is damaged on both sides. In these cases, horizontal and vertical measurements can be taken from a body of the same body style. Once these basic dimensions are taken and established on the damaged body, alignment can be made by diagonal measurements taken from points on the two pillars.

Do not attempt to correct any serious misalignment with one jacking operation. This is particularly true if other sections of the body also require aligning. Align each section proportionately until the proper dimensions are obtained.

Door openings are checked in the same manner as the body. Horizontal, vertical, and diagonal checking points are established on all four sides of the door opening that is being measured.

FRAME INSPECTION

ALL MODELS EXCEPT ECONOLINE

Frame misalignment can affect front

wheel alignment and can cause improper operation and/or abnormal wear of chassis parts.

Before checking frame alignment, inspect the frame for damage and loose parts. Inspect all frame members for cracks, twists, or bends. Check all welded connections for cracks. Inspect all rivets, bolts, and body support brackets for looseness. Make all necessary repairs or replacements.

DIAGONAL OR X FRAME CHECKING METHOD

ALL MODELS EXCEPT ECONOLINE

Frame alignment can be checked without removing the truck body from the frame by using the diagonal or X checking method.

1. Place the truck on a clean level floor and set the parking brake.
2. Select several points along one frame side member and very carefully transfer these points with a plumb bob to the floor. If desired, paper can be taped on the floor along both sides of the truck below the frame. Mark the points on the floor as accurately as possible.
3. Locate the corresponding points along the opposite frame side member, and very carefully transfer these points to the floor in the same manner.
4. Move the truck away from the marks on the floor, and measure between diagonal points. Both corresponding measurements should be equal within 1/4 inch. Measure diagonally between all points on the floor.
5. Measure between corresponding points parallel to the frame side members. These measurements should be within 1/4 inch of each other.

The squareness of the frame side member web and the lower flanges at the spring hangers should be within 1/16 inch. The squareness of the side member web at the steering gear mounting location should be within 1/16 inch. The web and flange should be square at all other points within 1/8 inch.

Any point on one side member should be within 1/8 inch ahead, behind, above, or below the corresponding point on the opposite side member. The frame should not be bowed more than 1/8 inch for each 100 inches of frame length. The overall width of the frame should not vary more than 1/8 inch.

FRAME REPAIR

ALL MODELS EXCEPT ECONOLINE

Drilling Precautions

Do not drill holes in the frame flanges, since this tends to reduce the frame strength.

Welding Precautions

Disconnect the negative battery ground cable before using electric welding equipment.

All frame welding should be done with electric welding equipment, and the heat should be kept in a small area to prevent change in hardness of the metal. **Do not apply heat to or weld 50,000, 80,000 and 110,000 psi frames.**

When a reinforcement is welded to a side member, run the welds lengthwise along the reinforcement.

Frame Straightening

Frame misalignment can be corrected by straightening the out-of-line parts or by replacing the crossmembers, braces, or brackets if they are badly damaged.

To prevent internal stresses in the metal, frame straightening should be limited to parts which are not severely bent. **If heat is needed to straighten a frame member, keep the temperature below 1200 degrees F (a dull red glow). Excessive heat may weaken the metal in the frame members and cause permanent damage. Do not apply heat to 50,000, 80,000 and 110,000 psi frames.**

Frame Reinforcing

After a bent frame member has been straightened, inspect the member closely for cracks. If any cracks show, the frame member should be reinforced or replaced. If the frame is a 50,000, 80,000 or 110,000 psi frame, **no repair method is approved.**

Reinforcements can be made from channel, angle, or flat stock. The reinforcement stock should be of the same material and the same thickness as the frame member being reinforced.

To insure sound repair, the crack should be prepared before the reinforcement is welded to a cracked frame member. **Do not weld 50,000, 80,000 and 110,000 psi frames. The only frame that welding is permissible on is the 36,000 psi frame.** To prevent the crack from spreading, drill a 1/8 inch hole at the root of the crack. Grind out the crack to form a slot which will allow the weld to penetrate to the surface of the reinforcement.

The proper location of the reinforcement depends upon the location of the crack. If the crack is at the bottom of the channel, the reinforcement should be welded to the channel bottom. If the crack extends along the side of the channel, an additional reinforcement should be welded to the side.

Frame Member Replacement

If a damaged frame member is to be replaced, new bolts, grade 8 fasteners and rivets required for replacement of parts, should be of the same specifications as the original bolts or rivets. In cases where it is necessary to substitute a bolt for a rivet, use the next larger size bolt.

PART 47-30 F-100 Through F-350

COMPONENT INDEX	Page	COMPONENT INDEX	Page
REMOVAL AND INSTALLATION		Fender	
Body Mounts	30-02	Front	30-01
Body Sealer	30-01	Rear	30-01
Bumper	30-01	Grille	30-01
Exterior Mouldings	30-01	SPARE TIRE CARRIER	
		Side Mounted	30-04
		Slide Out	30-04

REMOVAL AND INSTALLATION

RADIATOR GRILLE

F-100 THROUGH F-350

The radiator grille assembly consists of the grille outer shell and two grille inserts. Each insert is attached to the outer shell with eight screws which can be removed from the the front of the vehicle.

The grille outer shell installation is shown in Fig. 1.

1. To remove the outer shell, remove four screws attaching each end of the grille to the fender.
2. Remove the lower retaining screws along the lower edge of the grille.
3. Remove the grille outer support bracket-to-radiator support bolts at each end of the grille.
4. Remove the upper mounting bracket-to-grille bolts.
5. Disconnect the parking light wires and remove the grille.
6. Tansfer all U-nuts, clips, mounting brackets etc. to a new grille if the grille is to be replaced. Then, position the grille.
7. Connect the parking light wires.
8. Install the upper mounting bracket-to-grille bolts.
9. Install the grille outer support bracket-to-radiator support bolts at each end of the grille.
10. Install the lower retaining screws along the lower edge of the grille.
11. Install the four screws attaching each end of the grille to the fender.

FRONT FENDER

Removal

1. Clean all dirt from the fender attaching screws, bolts and nuts.
2. Remove the grille and headlight assemblies from the vehicle.
3. Remove the screws attaching the front of the fender to the radiator support.
4. Remove one screw attaching the rear lower end of the fender to the lower corner of the cab and remove one pin retaining the seal to the lower corner of the cab (Fig. 2).
5. Remove one screw from inside the cab attaching the top rear corner of the fender to the cowl.
6. Remove the screws attaching the top edge of the fender to the fender apron and radiator support and remove the fender from the vehicle.
7. Remove the pins attaching the seal (Fig. 2) to the fender and remove the seal from the fender.
8. Remove the nuts and retainers from the fender.

Installation

1. Position the nuts and retainers on the fender.
2. Position the seal to the fender and install the attaching pins.
3. Apply sealer to the upper edge of the apron.
4. Position the fender to the apron and install the screws loose.
5. Install one screw from the inside of the cab loose, attaching the top rear corner of the fender to the cowl.
6. Install a pin retaining the seal to the lower corner of the cab, and install the screw loose, attaching the rear lower end of the fender to the lower corner of the cab.
7. Install the screws loose, attaching the front of the fender to the radiator support.
8. Adjust the fender position and tighten all mounting screws.
9. Install the grille and headlight assemblies.

REAR FENDER—PICK-UP

1. Clean the dirt from the fender retaining bolts and nuts with a wire brush.
2. Remove the fender brace to fender nut and bolt.
3. Remove the fender to body nuts and/or bolts, and remove the fender.
4. Clean the body in the fender attaching area.
5. Position the new fender, and start all of the attaching bolts and nuts to assure bolt hole alignment.
6. Tighten all of the fender retaining nuts and bolts.

FRONT BUMPER

The two methods of front bumper installation for all light truck models are shown in Fig. 3. On models with the bumper bolted directly to the frame, remove the bumper bolts and lift the

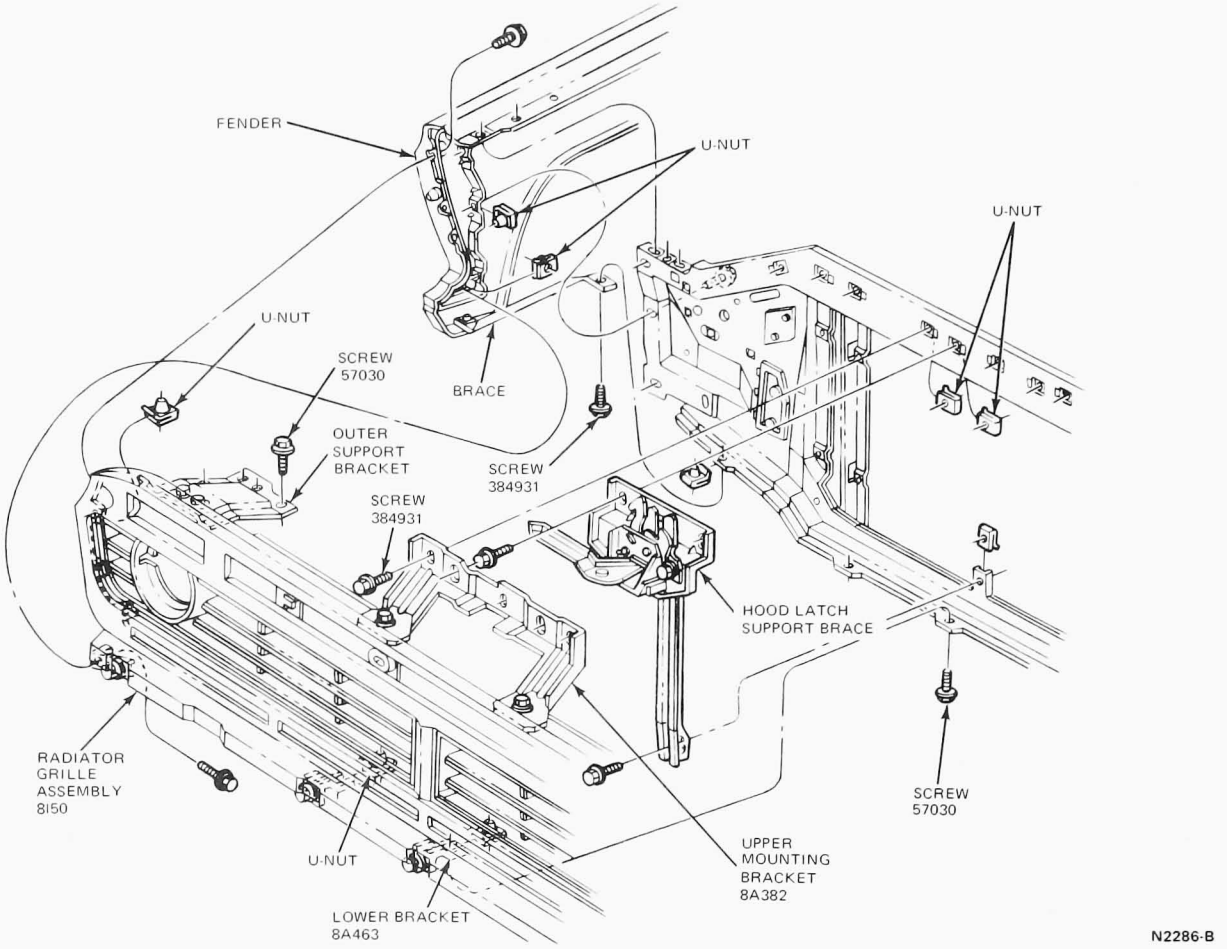

FIG. 1 Grille, Hood Latch and Related Parts—F-100 Through F-350

bumper from the frame. On models with bumper brackets (Fig. 3), remove the bumper bracket to frame attaching bolts and remove the bumper and brackets. Then, remove the brackets from the bumper.

EXTERIOR MOULDINGS

Before removing the exterior mouldings, determine by the type of retainer used if it is necessary to remove an interior trim panel (Fig. 4 through 6). If a weld stud is distorted or broken off, it should be replaced with a screw (379560-S101).

BODY SEALER

The body sealer locations are shown in Fig. 9. The sealer types and application procedures are given in General Information of Part 47-01. The test procedure for locating dust and water leaks is given in Diagnosis and Testing of Part 47-01.

BODY MOUNTS

Removal

1. Loosen the attaching bolt leaving a minimum of four threads in the retainer.
2. Using a long solid bar or drift and a large hammer, strike the head of the attaching bolt sharply downward to separate the **swedged** or **flare** portion of the lower retainer from the upper retainer. Holding the lower retainer nut, remove the attaching bolt, lower retainer and absorber (Fig. 7). Note: On vehicles with a frame mounted **midship** auxiliary fuel tank or a **in cab** fuel tank, it will be necessary to either loosen or remove the fuel tank to provide tool clearance when removing the rear cab mounts. Refer to Part 24-50 for removal and installation procedures.
3. Loosen all cab mount attaching bolts before raising the cab. Leave the bolts loosely in place in the mounts not being replaced.
4. Raise the body section enough to remove the upper absorber and retainer assembly.
5. Discard all parts removed.

Installation

1. Position the new upper absober and retainer assembly. Be sure the pilot section of the rubber absorber is positioned correctly in the frame crossmember or bracket.
2. Lower the body section onto the new upper absorber and retainer. Use a drift to align the holes in the sheet metal and the mount.
3. Insert the proper attaching bolt (Fig. 7).
4. Position a new lower absorber and lower retainer assembly on the attaching bolt and tighten until snug.
5. Holding the lower retainer assembly with a suitable wrench, tighten the attaching bolt to 40 lb. ft. for the front end sheet metal mounts or 50 lb. ft. for the front and rear cab mounts.

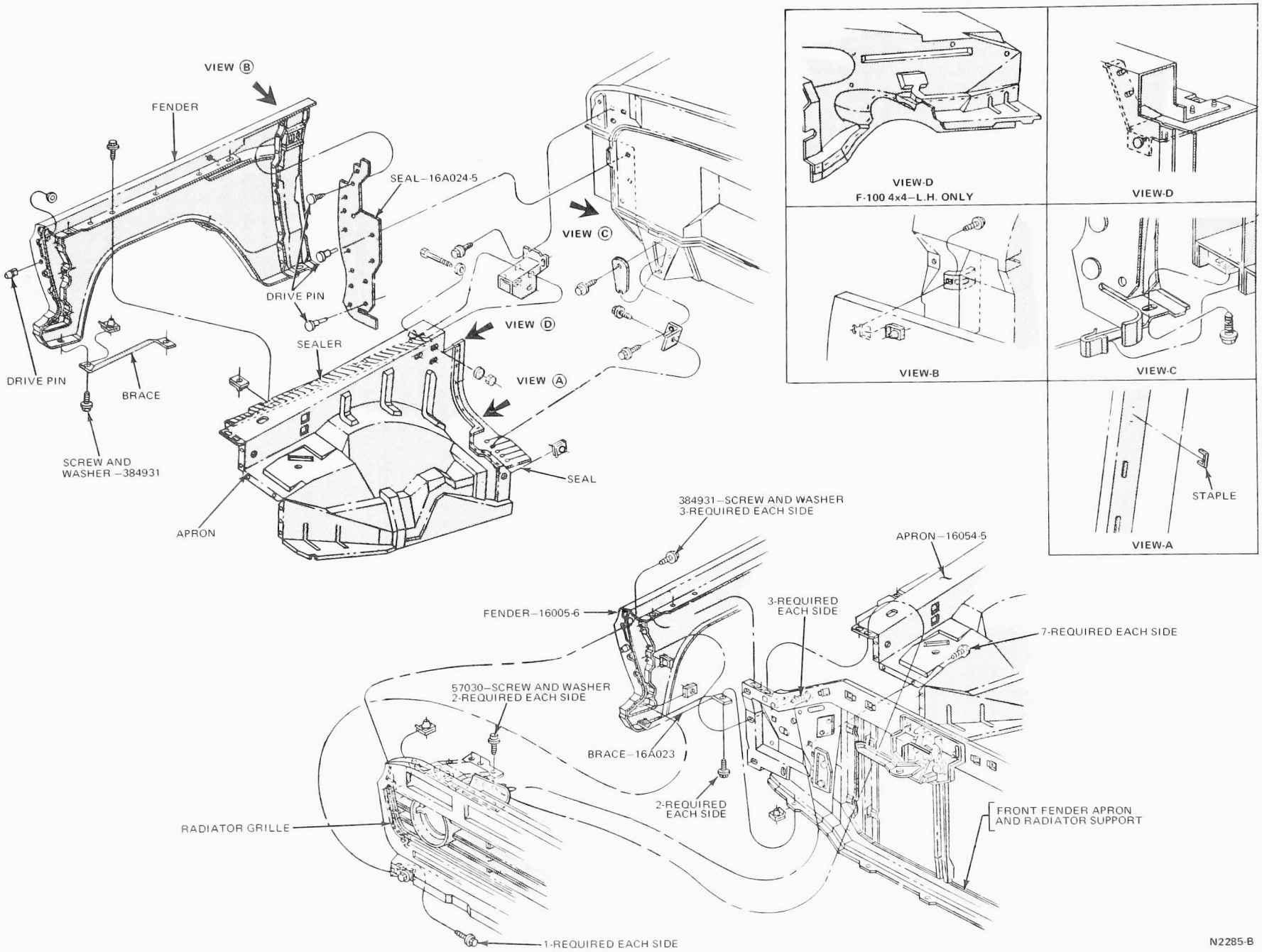

FIG. 2 Front Fender Installation

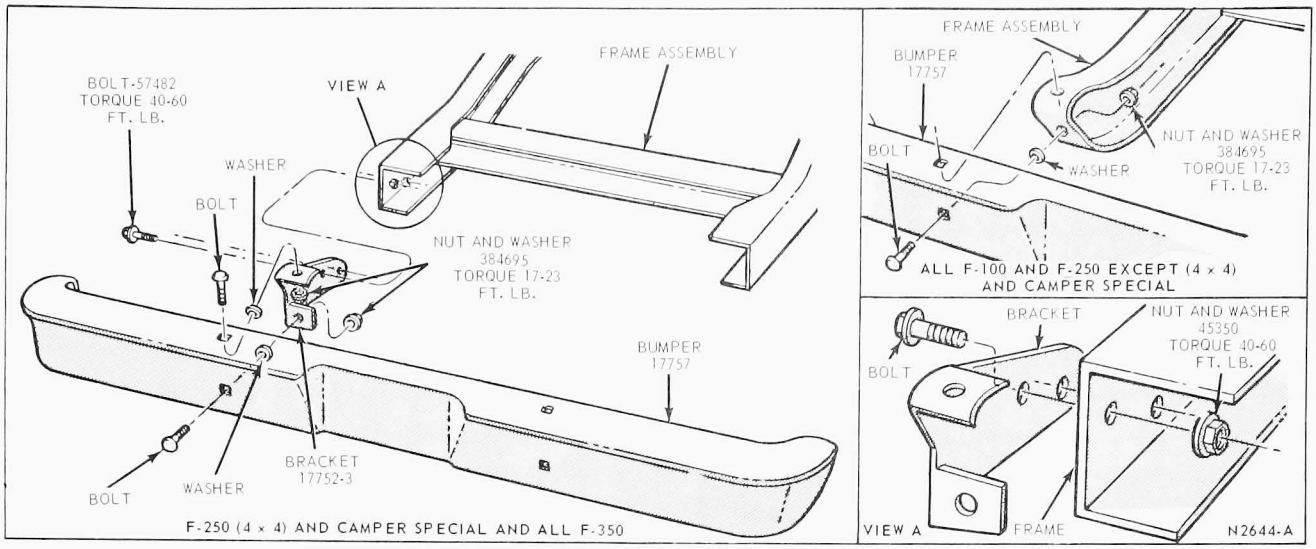

FIG. 3 Front Bumper Installation

6. Tighten all other mounts that were loosened to the appropriate torque.
7. On trucks equipped with a midship auxiliary tank it is necessary to cut the left rear cab attaching bolt 1/2 inch from the lower retainer nut to provide adequate clearance between the bolt and the fuel tank. Retorque the bolt after cutting. This operation is only necessary when the left rear cab mount is replaced.
8. If the fuel tank was loosened or removed, reinstall the fuel tank in the original position.

SLIDE-OUT SPARE TIRE CARRIER

F-100 AND F-250

Removal

1. Rotate the lock pin, aligning the tang on the pin with the slot in the channel assembly and the release handle. Remove the lock pin (Fig. 8).
2. Pull down on the release handle by pulling it down and outward to unlock the carrier channel assembly from the latch bracket assembly.
3. The channel assembly and spare tire assembly is now held by the latch bracket assembly tangs.
4. Grasp the release handle and lift the carrier and spare tire upward to take the weight off of the latch bracket assembly. Pull the latch bracket outward to release latch from channel assembly and carefully lower the spare tire and channel assembly to the ground.
5. Grasp the **hand-hold** area of the channel assembly and, lifting slightly, pull both the spare tire and channel assembly outward until the channel assembly contacts the builtin stop of the support assembly.
6. Remove the spare tire and wheel from the channel assembly.

Installation

Before installing the spare tire and wheel assembly into the slide-out carrier, refer to Fig. 8 for spacer requirements and adjustment procedures.

1. Place spare tire assembly in position on channel assembly.
2. Lifting the channel assembly and spare tire, slightly, push both back under the vehicle until the channel assembly hits the stop and is positioned correctly on the support assembly. Note: The latch bracket assembly must be lined up with the slot in the channel assembly and the support assembly.
3. Lift the spare tire assembly and channel assembly upward. The latch bracket assembly should slide freely through the slot of the channel and support assembly until the latch bracket assembly snaps into position and now supports the spare tire assembly and channel assembly.
4. Push the release handle downward (rotating inward) until it is in the **locked** position.
5. Install the lock pin in position and lock the release handle to the channel assembly (Fig. 8).

SIDE-MOUNTED SPARE TIRE CARRIER

F-100 THROUGH F-350

Removal

The side-mounted spare tire carrier is enclosed with a removable cover panel assembly. The cover panel assembly is held in position by two **torsion-bar** type wire latches and two **hook-type** hinges and hinge brackets.

1. Release the front and rear latches (item #3 Fig. 9), by lifting the latch handle out of the locked position in the lower panel inner flange. Push the latches inward and at the same time, pull downard and outward which releases the panel at the top.
2. Swing the panel assembly (item #1) outward and remove both front and rear hooks (hinge) from the front and rear hinge brackets (item #5 and #2) and remove the panel assembly.
3. Release the wing nut safety latch (swing the latch upward) and remove the wing nut (item #7).
4. Lower the retainer plate assembly (item #6) to the ground. Note:**The plate assembly is utilized as an assist ramp for removal and installation of the spare tire.**
5. Remove the wing nut bolt (item #5) from the inner support assembly (item #4) and grasping the lower part of the spare tire, pull it away from the support assembly (item #4) allowing the spare tire assembly to slide down the retainer plate assembly as an assist ramp (item #6).

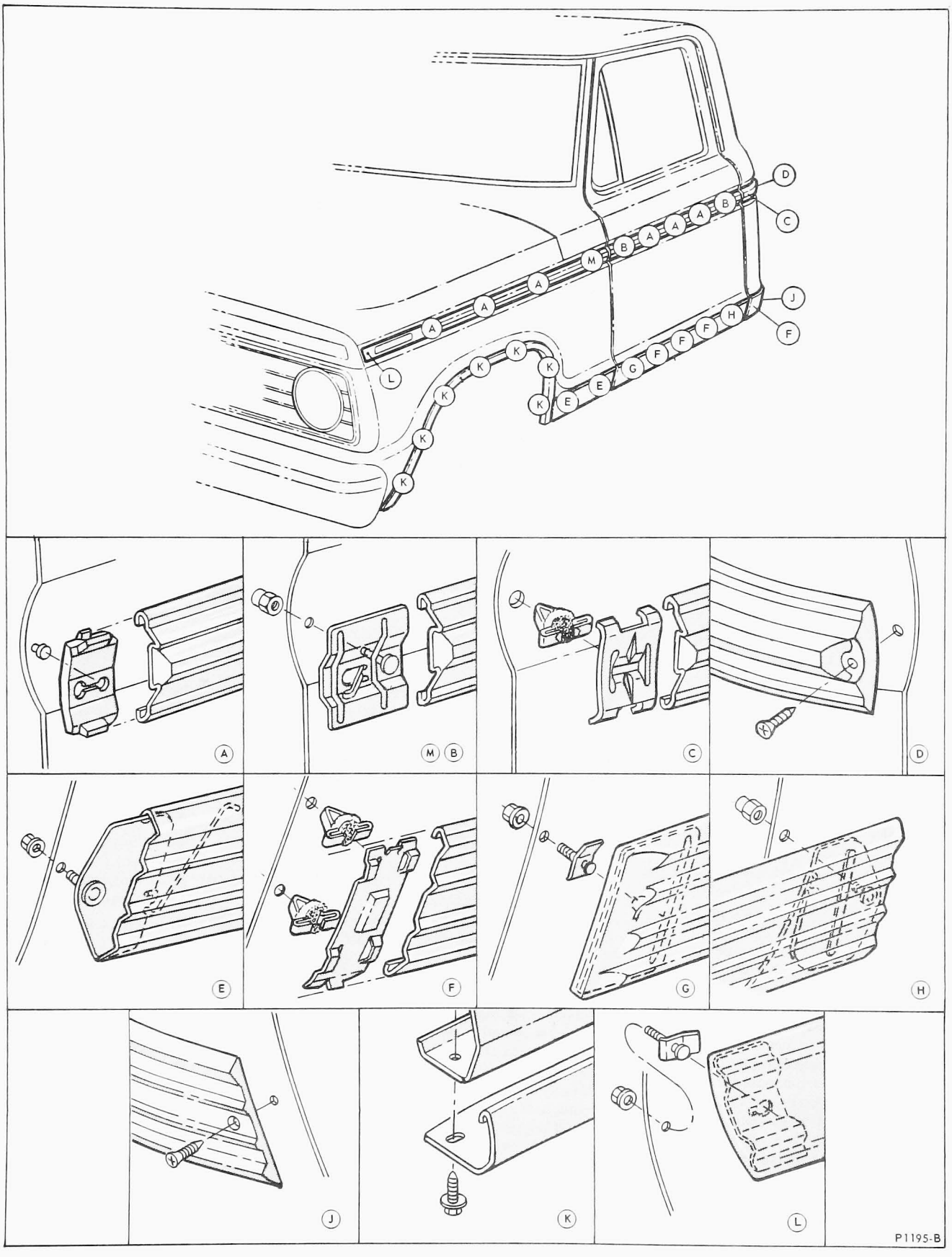

FIG. 4 Cab Exterior Mouldings—Ranger

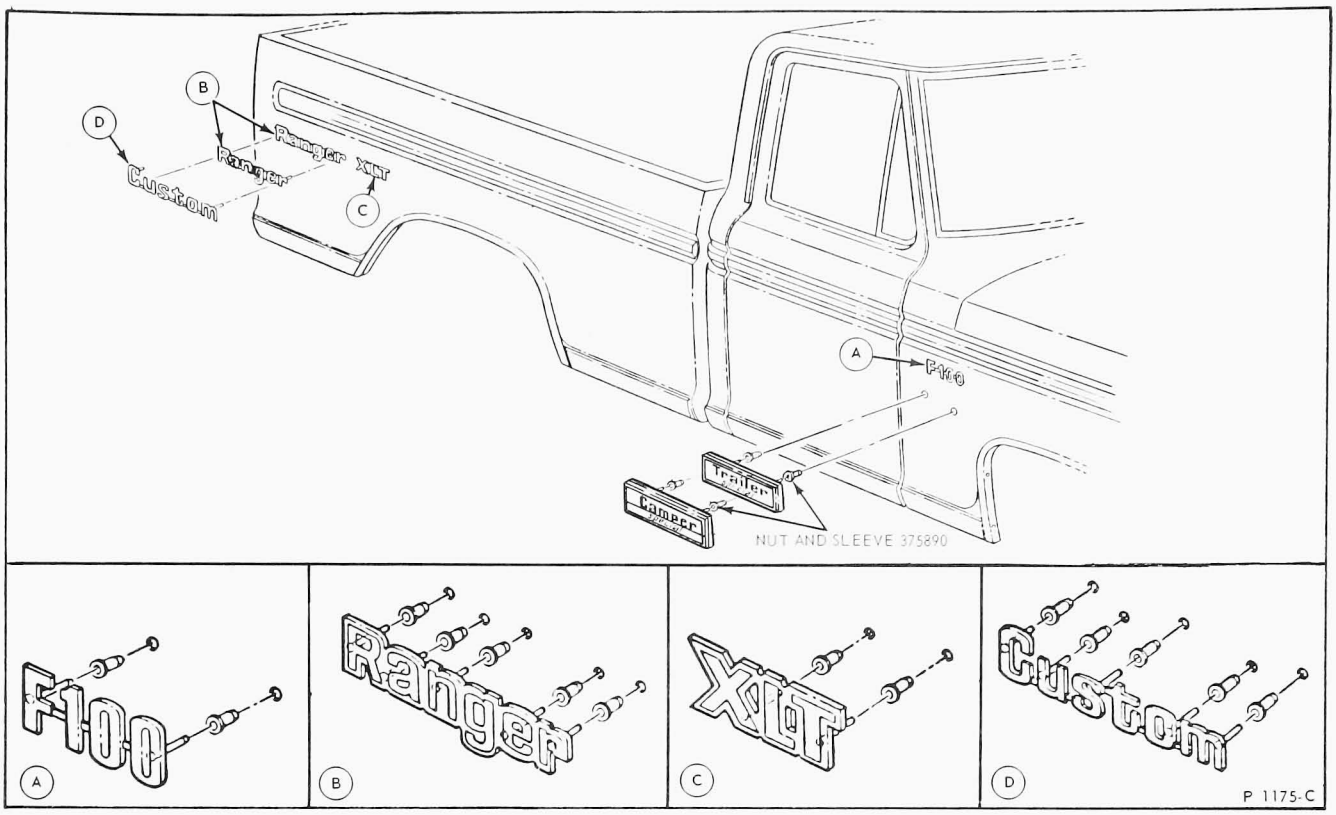

FIG. 5 Cab Exterior Mouldings

Installation

Note: On vehicles not originally equipped with a spare tire, the carrier will have a shipping bolt and nut installed (item 10 and 12) which must be removed and discarded before installing a spare tire at a latter date. See Fig. 9.

1. Position the spare tire on the retainer plate assembly (item #6 Fig. 9) and roll or slide the spare tire up into the storage compartment with the lower part of the spare tire resting on the retainer assembly.
2. Lifting up on the retainer assembly will push the spare tire into position allowing it to rest on the inner support assembly (item #4). Install the wing nut bolt (item #5) on the support assembly. Push the outer retainer plate against the spare and insert the wing nut bolt through the hole in the retainer as shown in Fig. 9.
3. Install the wing nut and tighten securely. Rotate the safety latch downward into position against the wing nut.
4. Positioning the front and rear hooks (hinges) into the front and rear hinge brackets (item #5 and #2), swing the cover panel upward into position in the opening of the pick-up box side panel. Hold panel in this position.
5. Push the front and rear latch handles inward past the lower panel flange and, lifting each latch handle upward to clear the upturned flange, pull each latch handle outward and allow the latch handle to drop into the **locked** position in the panel lower flange.

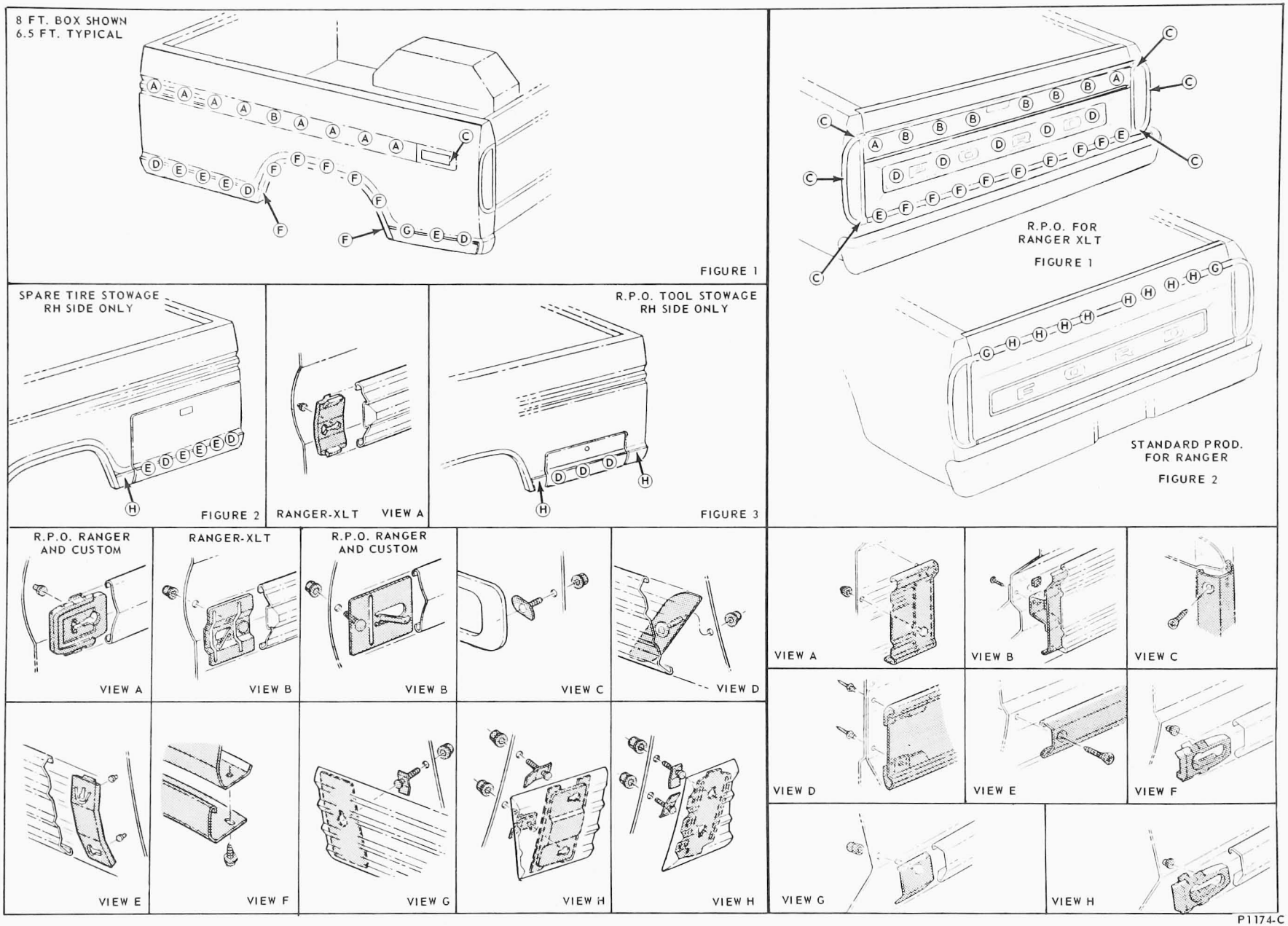

FIG. 6 Body Side Mouldings

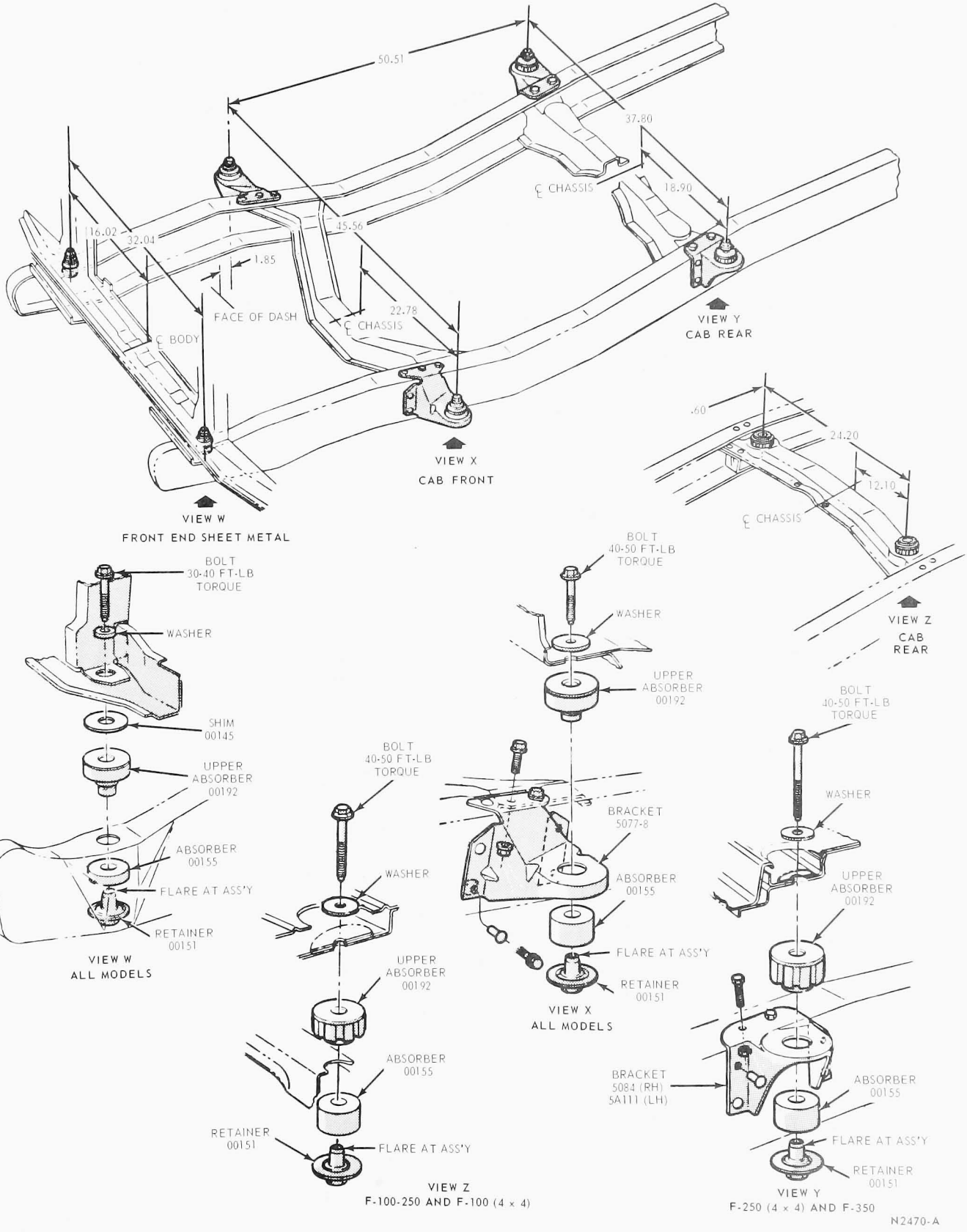

FIG. 7 Body Mounts

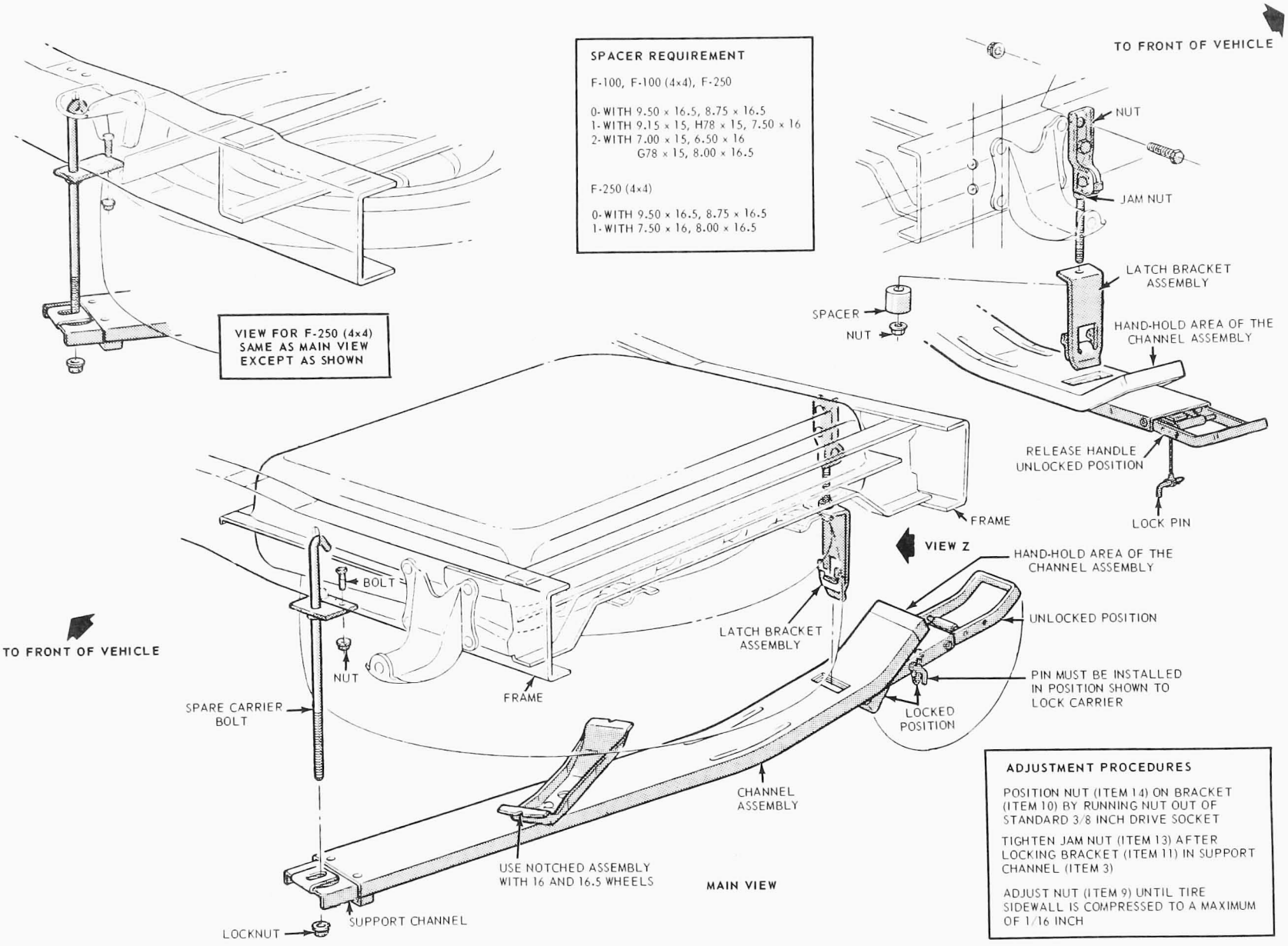

FIG. 8 Slide-Out Spare Tire Carrier—F-100 and F-250

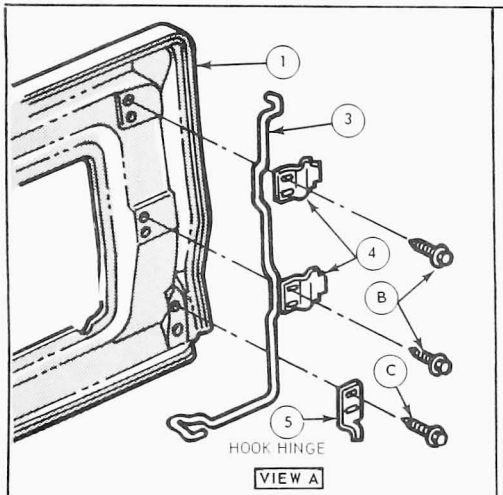

VIEW A

1. SPARE WHEEL CARRIER-ACCESS COVER PANEL ASSEMBLY.
2. ACCESS COVER PANEL ASSEMBLY-HOOK BRACKET.
3. LATCH-ACCESS COVER PANEL RETAINING.
4. LATCH BRACKETS.
5. HOOK (HINGE)-ACCESS COVER PANEL.

(A,B,C)-ATTACHING SCREWS.

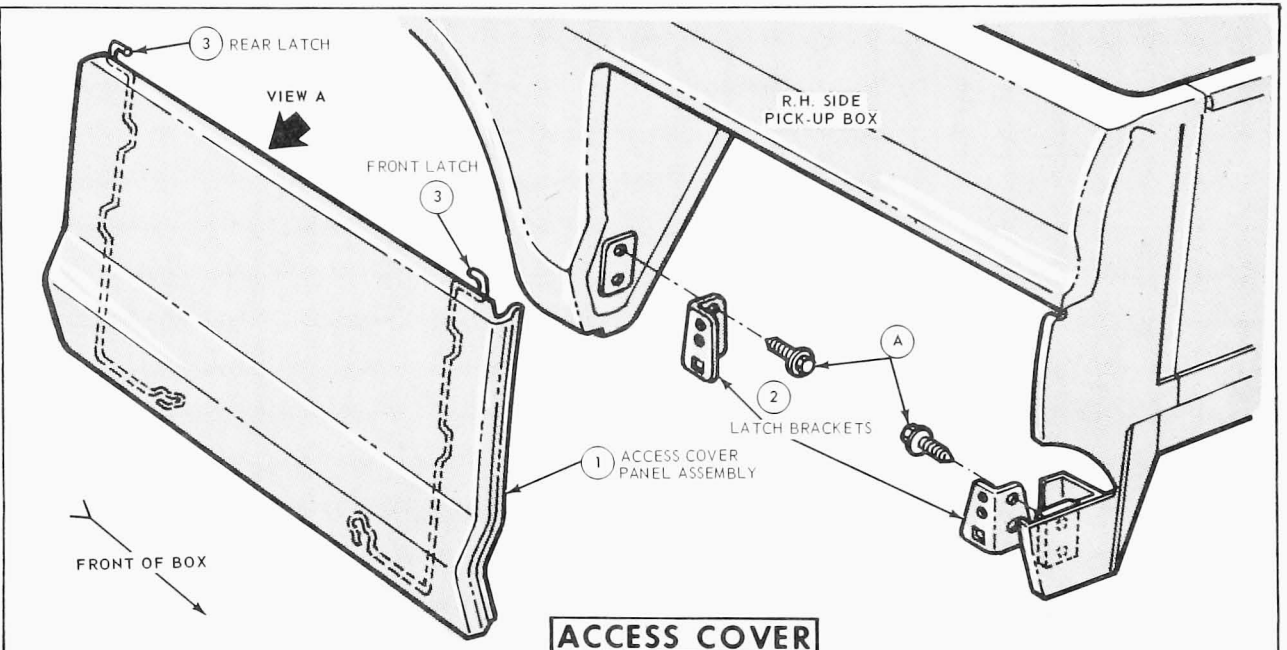

ACCESS COVER

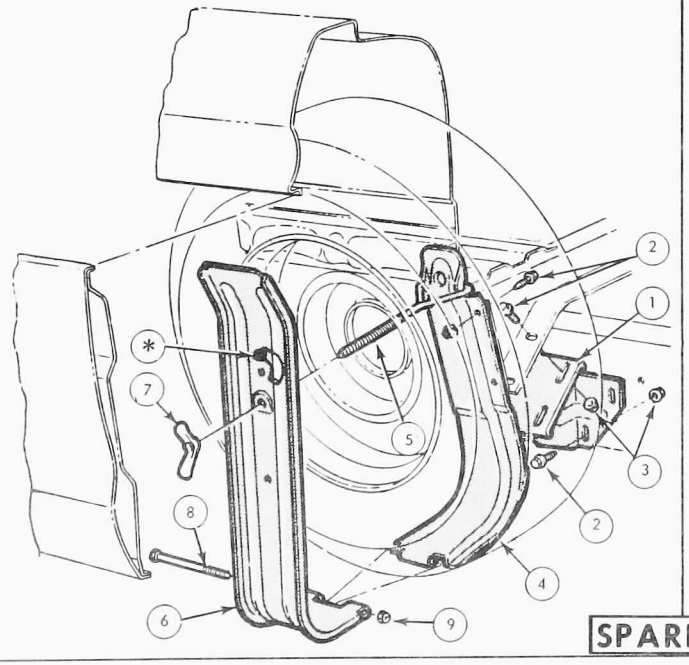

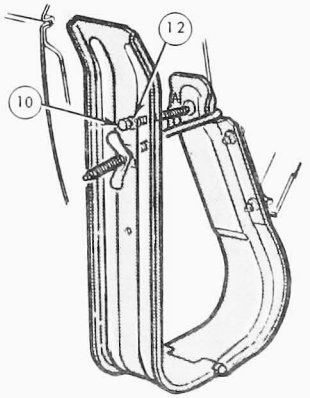

VIEW WITH SPARE TIRE CARRIER ONLY

SPARE TIRE

ITEM NO.	PART NUMBER	TORQUE FT. LBS.	PART NAME
1	1A376-A		BRACKET ASSY.
2	56339		BOLT
3	382802	26-32	NUT
4	1469		SUPPORT ASSY.
5	1447		BOLT
6	1424		PLATE
7	1A384	5-10	WING NUT
8	300990		BOLT
9	385072	26-32	NUT
10	385075		BOLT
11	44729		WASHER
12	33799	26-32	NUT

* WING NUT - LATCH

N 2656-A

FIG. 9 Side-Mounted Spare Tire Carrier F-100 Through F-350

PART 47-31 F-and B-500 THROUGH 750, 6000 and 7000

COMPONENT INDEX	Page	COMPONENT INDEX	Page
REMOVAL AND INSTALLATION		REMOVAL AND INSTALLATION - Cont.	
Body Sealer	31-3	Fender – Front	31-3
Bumper – Front	31-3	Grille	31-1

REMOVAL AND INSTALLATION

RADIATOR GRILLE

Removal

1. Remove 3 screws attaching each end of the grille to the front fender (Fig. 1).
2. Remove 6 screws attaching upper support to radiator support.
3. Remove hood latch support lower 2 screws.
4. Remove lower center bracket attaching screw.
5. Remove the outer lower bracket-to-radiator support screw (1 each side).
6. Disconnect headlight wires and remove grille.
7. Transfer the hood latch support, upper support, headlights and mounting brackets to new grille if the grille is to be replaced.

Installation

1. Position the grille to the front of the vehicle and connect the headlight plugs to the headlamps.
2. Install the outer lower bracket-to-radiator support screw (one on each side).
3. Install the lower center bracket attaching screw.
4. Install the hood latch lower support screws (two).
5. Install six screws attaching the upper support to the radiator support.
6. Install three screws attaching each end of the grille to the front fender(s).

FRONT FENDER

Removal

1. Clean all dirt from the fender attaching screws, bolts and nuts.
2. Remove the grille and headlight assemblies from the vehicle.
3. Remove five screws attaching the top edge of the fender apron to the fender (Fig. 2).
4. Remove the four screws attaching the rear of the fender to the cab.
5. Remove three screws attaching the front of the fender to the radiator support (Fig. 2) and remove the fender from the vehicle.
6. Remove three screws and nuts attaching the extension brace to the fender and extension, and remove the brace.
7. Remove three extension attaching screws and nuts and remove the rear lower extension from the fender.
8. Remove nine seal pins and remove the seal from the fender (Fig. 2).
9. Remove the rear filler (Fig. 2) from the rear edge of the fender.
10. Remove all nuts and retainers from the fender.

Installation

1. Position the nuts and retainers on the fender.
2. Position the rear filler (Fig. 2) to the fender and install the attaching screws, washers, and nuts.
3. Position the seal to the fender and install the attaching pins.
4. Apply sealer to the upper edge of the lower rear extension (Fig. 2) and position the extension to the fender. Then, install the three attaching bolts and nuts.
5. Position the extension brace to the fender and extension and install the three attaching screws and nuts.
6. Apply sealer to the fender apron (Fig. 2), and position the fender to the vehicle and over the fender apron and install the fender to fender apron attaching screws loose.
7. Position the front of the fender to the radiator support and install the three attaching screws loose.
8. Install the four screws that attach the rear of the fender to the cab.
9. Install the radiator grille and headlight assemblies on the vehicle.
10. Align the fender to the body and tighten all the fender attaching screws.

FRONT BUMPER

Remove the bolts attaching the bumper to the frame and remove the bumper from the vehicle. To install the bumper, position the bumper to the frame and install the attaching bolts.

BODY SEALER

The sealer types and application procedures are given in General Information of Part 47-01. The test procedure for locating dust and water leaks is given in Diagnosis and Testing of Part 47-01.

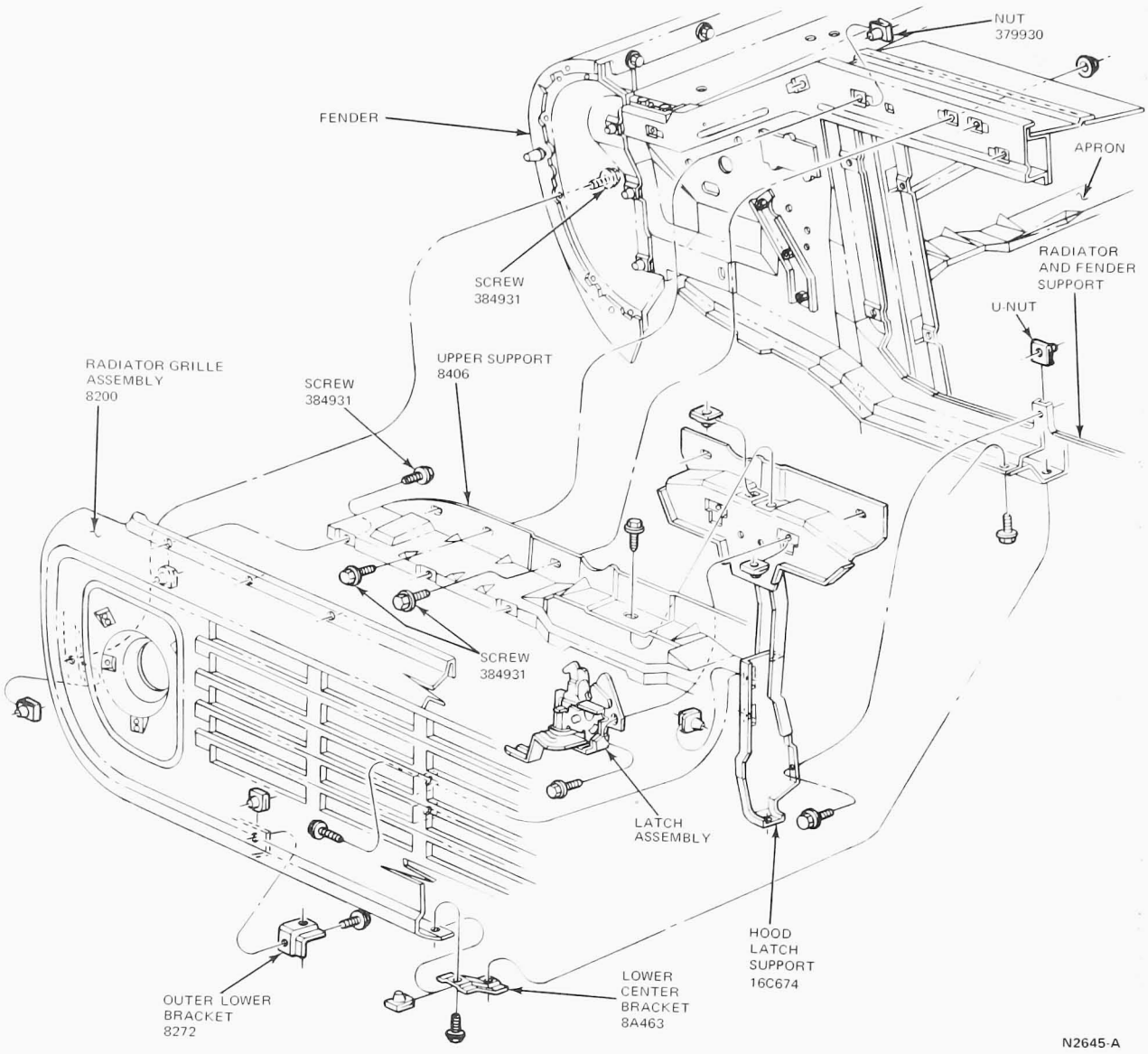

FIG. 1 Radiator Grille Installation—F-and B-500 through 750

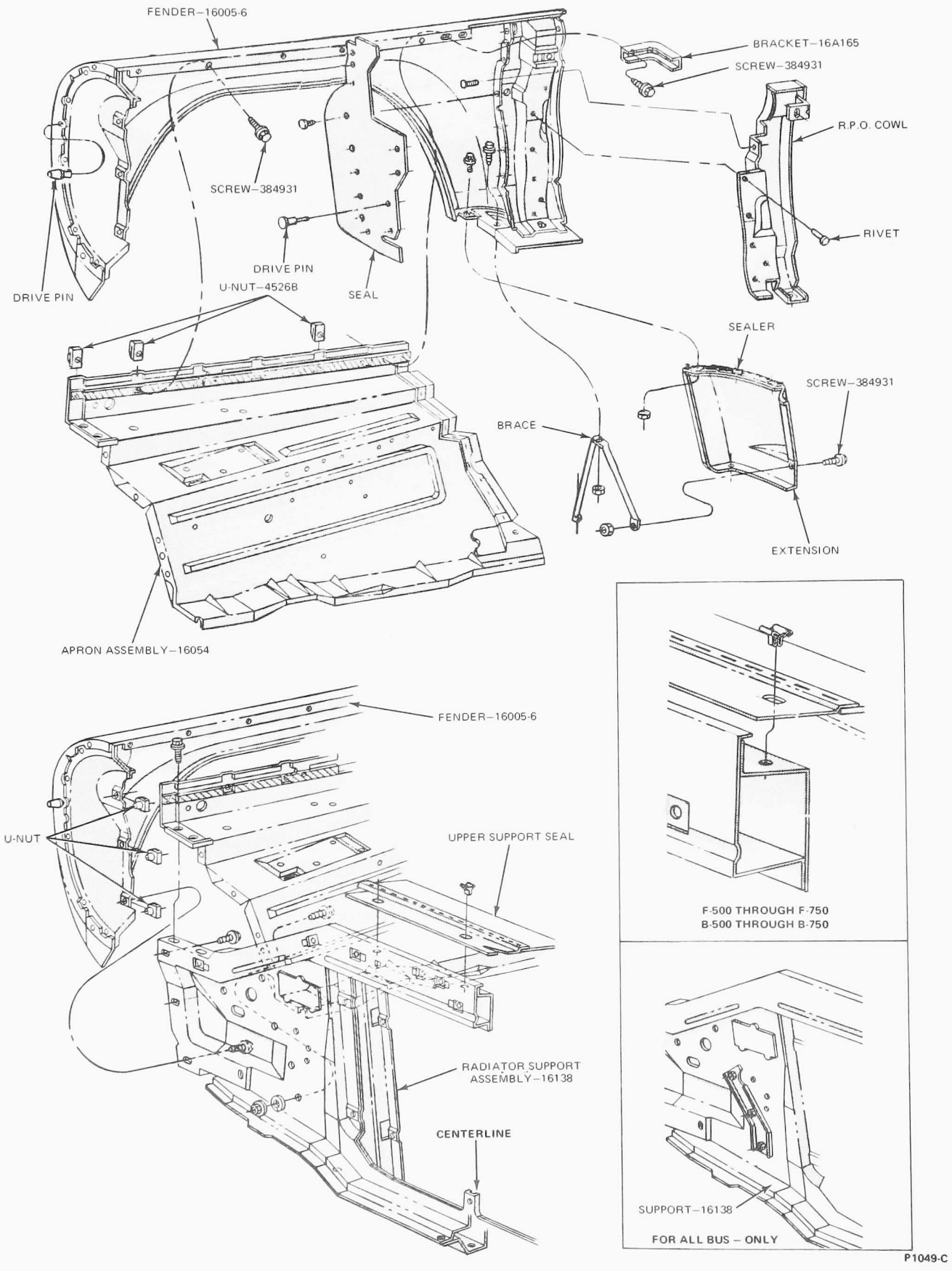

FIG. 2 Front Fender Installation

PART 47-32 L-Series

COMPONENT INDEX	Page	COMPONENT INDEX	Page
MAJOR REPAIR OPERATIONS		REMOVAL AND INSTALLATION	
Fiberglass Repair	32-06	Body Sealer	32-03
Painting	32-06	Bumper – Front	32-01
Repair Procedure	32-06	Exterior Trim	32-03
Safety Precautions	32-06	Grille	32-01
		Running Board	32-01

REMOVAL AND INSTALLATION

RADIATOR GRILLE

Remove the six screws from the outside of the grille which retain the grille to the hood assembly (Fig. 1). Then, remove seven retaining screws and washers from the inside of the hood assembly and remove the grille.

FRONT BUMPER

Remove the bolts attaching the bumper to the bumper brackets and remove the bumper from the vehicle. To install the bumper, position the bumper to the bumper brackets and install the attaching bolts.

RUNNING BOARD

Removal

1. Remove the four screws retaining the upper running board to the lower running board and to the fender (Fig. 2).
2. Remove the two screws retaining the

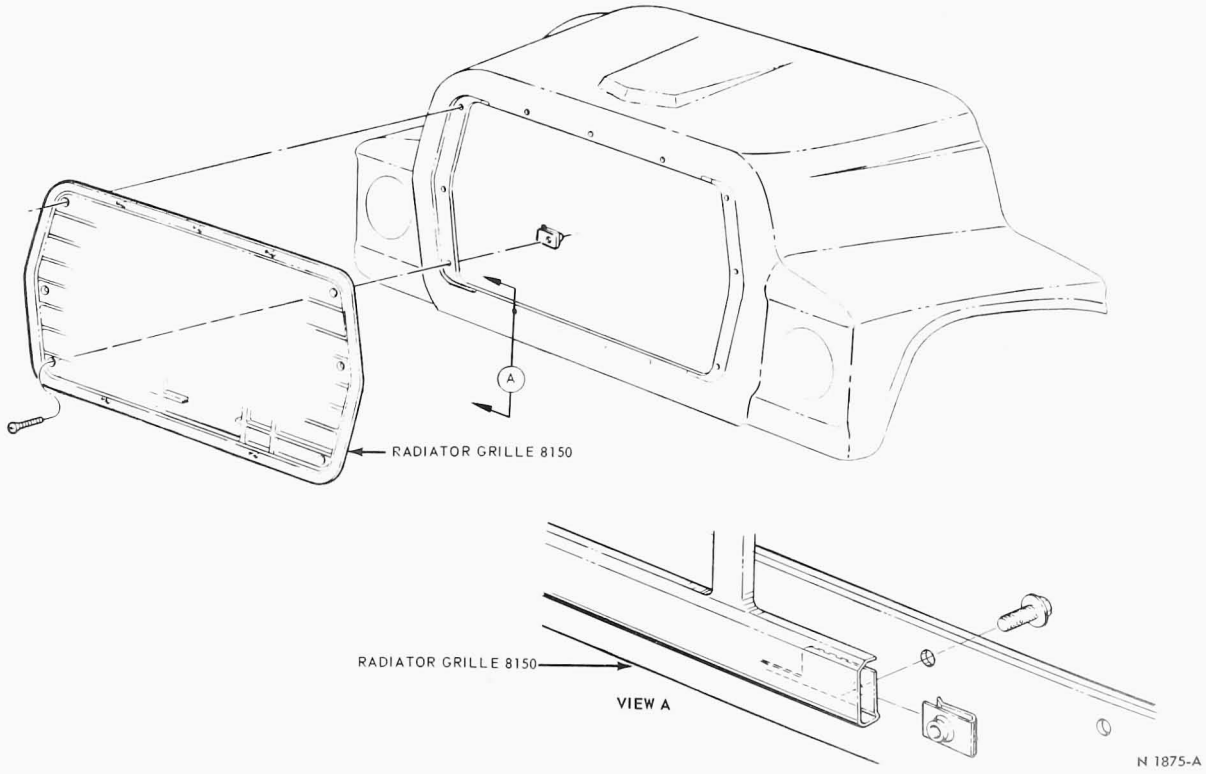

FIG. 1 Radiator Grille Installation—L, LN and LT-Series

upper running board to the running board front supports. Then, remove the upper running board.

3. Remove the screws retaining the lower running board to the running board rear support.
4. Remove the screw retaining the running board to the running board brace and remove the lower running board.
5. Remove the screws retaining the two front support brackets and the rear support bracket to the frame side rail and remove the brackets.

Installation

1. Position the two front support brackets and the rear bracket-to-frame side rail and install the retaining screws.
2. Install the lower running board by installing the retaining screws which secure it to the rear support bracket and brace (Fig. 2).
3. Position the upper running board to the front support bracket and install the retaining screws. Also install the screws retaining the running board to the fender and lower running board.

EXTERIOR TRIM

Before removing the exterior mouldings, determine by the type of retainer used if it is necessary to remove an interior trim panel (Fig. 3). If a weld stud is distorted or broken off, it should be replaced with a screw (379560-S101).

BODY SEALER

The sealer types and application procedures are given in General Information of Part 47-01. The test procedures for locating dust and water leaks is given in Diagnosis and Testing of Part 47-01.

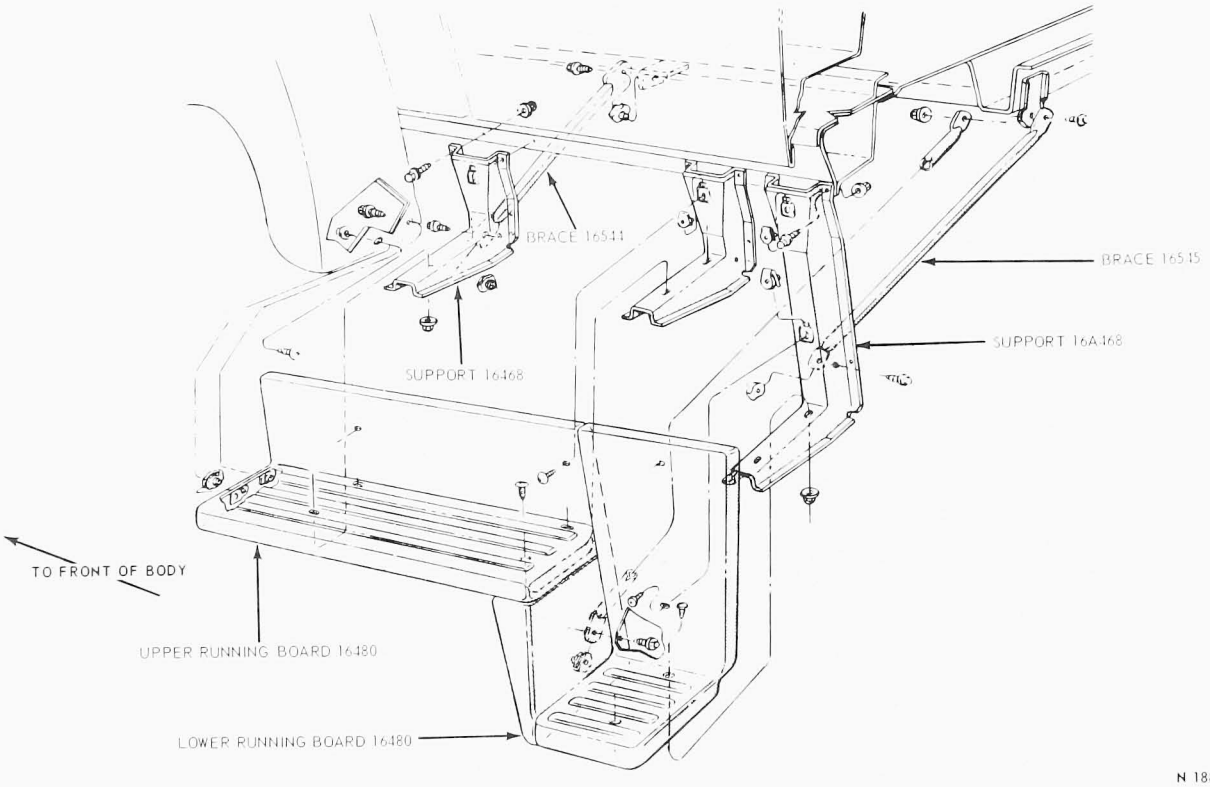

FIG. 2 Running Board Assembly—L-Series

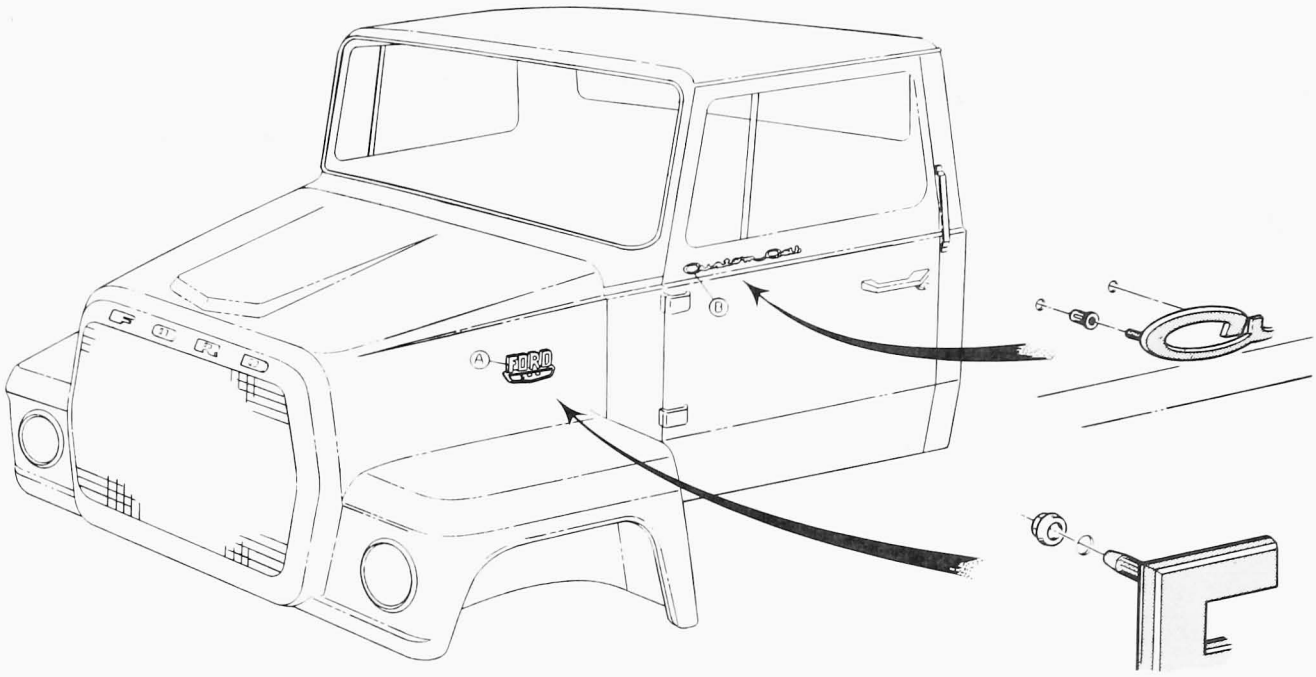

N 1880-A

FIG. 3 L-Series Exterior Trim

MAJOR REPAIR OPERATIONS

FIBERGLASS REPAIR

SAFETY PRECAUTIONS

Always use rubber gloves or the special hand cream supplied with epoxy resin repair kits. REMOVE ANY RESIN FROM THE HANDS AS SOON AS POSSIBLE AND PARTICULARLY BEFORE THE MIXTURE STARTS TO GEL. Any resin that adheres to the hands may be removed with lacquer thinner followed by a thorough washing with soap and water.

Use a respirator when grinding the fiberglass surface and use a vacuum attachment when operating a belt sander.

Always work in a well ventilated area in order to avoid possible toxic fumes that may result from using resin mixtures. Exercise care so as not to get any resin on clothing.

Keep all materials, utensils and the work area clean and dry as resin repairs involve chemical reactions. Any dirt, foreign material or moisture may upset the chemical reaction and result in an unsatisfactory repair.

REPAIR PROCEDURE

Grind or sand away all loose or broken material at the damaged area. Scuff sand the surface approximately one inch around the area to provide a good bonding surface. Be sure that the surface to be repaired is clean, dry, oil and paint free.

For cracks, form a shallow V along the crack with a file or grinder. Fill the area with a good quality polyester or epoxy body repair compound. Follow the manfacturer's directions with regard to mixing procedures. Allow the compound to harden and then sand smooth. If the surface is not level or smooth, use an additional filling and sand to a final smooth finish.

For larger broken areas use fiberglass cloth (five layers) impregnated with the resin, to cover the area. Overlap the damaged portion by one or two inches. When the material has hardened, file or grind and sand smooth. If low spots exist, fill them with resin mixture to which has been added short fibers cut from the fiberglass cloth. Add enough of the cloth to form a putty like resin mixture.

PAINTING

After the desired repaired surface has been obtained, prime and paint the surface in the normal manner.

PART 47-34 C-Series

COMPONENT INDEX	Page
ADJUSTMENTS	
Lock Assembly	34-2
DESCRIPTION AND OPERATION	
Lock Assembly	34-1
Tilt Cab Mechanism	34-1
REMOVAL AND INSTALLATION	
Body Sealer	34-4

COMPONENT INDEX	Page
REMOVAL AND INSTALLATION - Cont.	
Exterior Trim	34-4
Hinge Pin and/or Bushing	34-3
Lock Assembly	34-3
Lock Cam	34-3
Lock Cam Hook	34-3
Safety Latch	34-3
Sleeper Cab	34-4
Tilt Assist Spring	34-3

DESCRIPTION AND OPERATION

TILT CAB MECHANISM

The C-Series cab is hinged at the front and will tilt forward approximately 45 degrees, permitting easy access to the engine and other chassis components. A double lock is provided at the rear of the cab. The handle release operates the main part of the lock, while the lock cam hook and the safety latch are each operated by a control rod.

Before tilting the cab, make sure that no loose articles are lying around in the cab. If the truck is equipped with a grille guard, this guard must be tilted before the cab is tilted. To tilt the cab, pull up on the operating arm, pull out on the lower control rod to release the safety latch (Fig. 1). Hold the cab and let it rise slowly.

The oil and water can be checked and/or added through the large access plate behind the right seat back (Fig. 2).

The cab hinges are mounted toward the forward end of the frame side rails. The hinges are composed of an upper half, a lower half, a large hinge pin, a hinge pin bushing, and a bushing cap. All linkages and controls are pivoted in the centerline of the hinge pins. Therefore, the hand brake mechanism, steering column, accelerator linkage, and shifter linkage all have pivot points or universal joints in the centerline of the cab pivot pins.

If the entire cab must be removed, as in case of an accident, remove the tilt assist springs, disconnect every pivot point which falls in the centerline of the hinge pins, remove the support arm and remove the two pivot pin bushing caps. Also disconnect the heater hoses, the cables, and the electrical wiring. Lift the cab off the chassis.

The tilt assist springs are of the coil type and are loaded at all times, even when the cab is tilted up. Therefore, to avoid injury, the spring removal procedure given in Removal and Installation should be strictly followed.

LOCK

The complete lock mechanism (Fig. 1) consists of a release handle, operating arm, lock cam, cam hook, hood striker, safety latch, and the hook release levers with control rods.

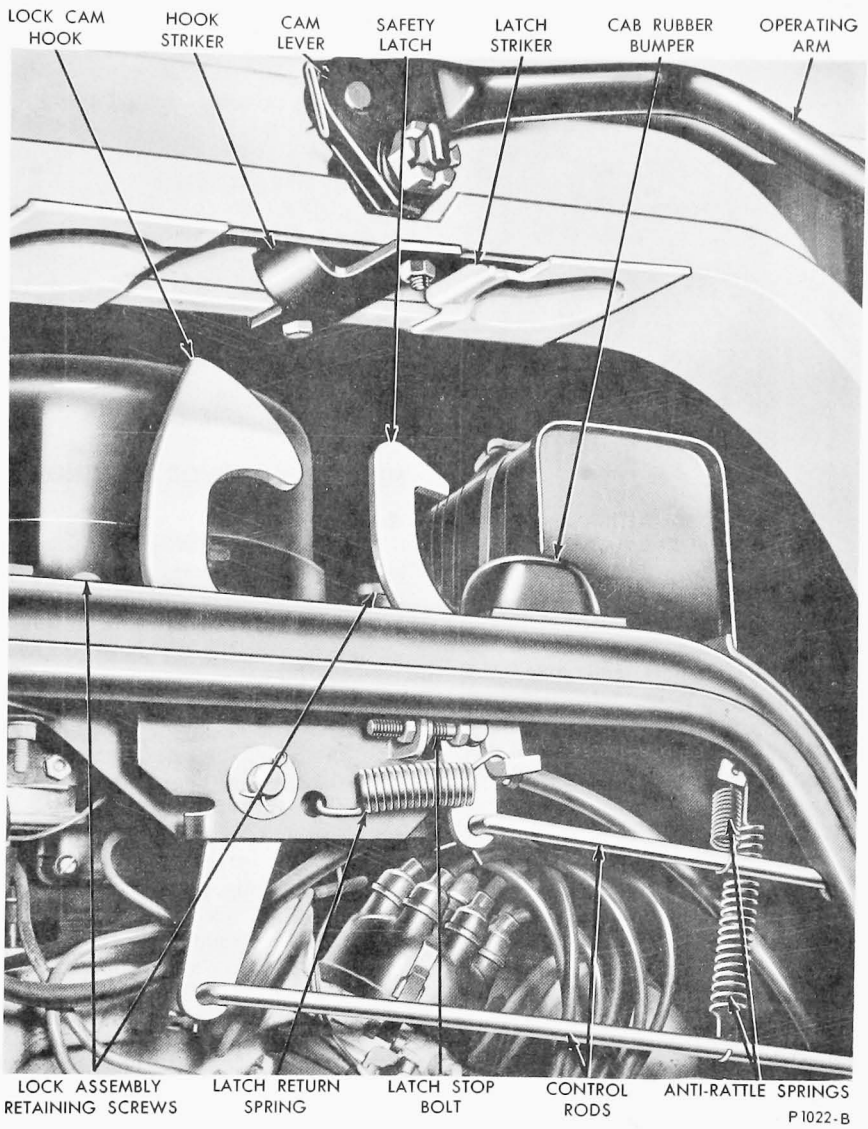

FIG. 1 C-Series Cab Mechanism

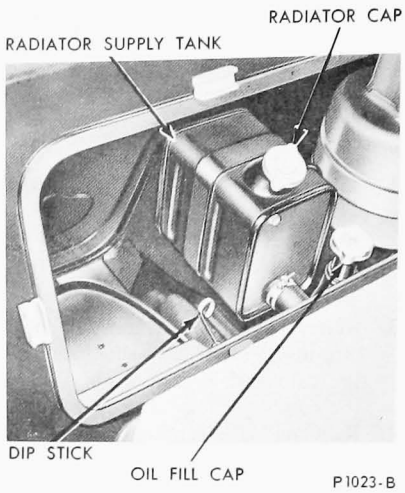

FIG. 2 Oil and Water Check Points

ADJUSTMENTS

LOCK ASSEMBLY

The cam hook and the secondary latch should both contact their individual strikers about 1/4 inch down from the top of the hook when the cab is lowered. Adjust the safety latch stop bolt to obtain proper contact of the safety latch to safety latch striker.

REMOVAL AND INSTALLATION

LOCK CAM

Removal

1. Tilt the cab and tie it down at a good working level.
2. Remove the clevis pin retaining the operating arm in the cam lever (Fig. 3).
3. Remove the forward cam nut, cotter pin, nut, and large washer, and pull the cam and lever assembly out of the cab.
4. Remove the rearward cam nut cotter pin, the nut, washer, cam lever, and large spacer.

Installation

1. On the rearward end of the cam (flattened end), install the large spacer and the cam lever. With the cam straight up, the lever should be pointing up and to the right at approximately a 45 degree angle.
2. Install the washer, nut, and cotter pin to hold the cam lever on the cam.
3. Position the cam in the cab, and install the large washer, nut, and cotter pin.
4. Connect the operating arm to the cam lever with the clevis pin.

LOCK ASSEMBLY

Removal

1. Remove the cab left-side bumper.
2. Remove each control rod cotter pin and washer, disconnect the safety latch and the cam hook control rods.
3. Remove the cotter pin and washer from the safety latch clevis pin out of the forward side of the radiator support.
4. Remove the two bolts and nuts retaining the lock assembly to the cab rear support, and remove the lock assembly (Fig. 3).
5. Remove the cam hook and the safety latch.

Installation

1. Install the cam hook and the safety latch with the release levers and return springs (see the two following procedures).

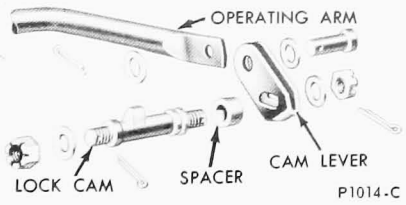

FIG. 3 C-Series Cab Lock Cam

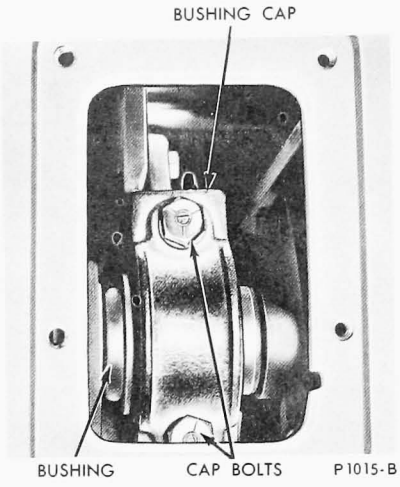

FIG. 4 Cab Hinge Pin Bushing Removal

2. Position the lock assembly in the radiator support, and install the retaining bolts and nuts.
3. Push the safety latch clevis pin through the forward side of the radiator support and install the washer and cotter pin.
4. Connect the safety latch and the cam hook control rods, and install the washer and cotter pin in each rod. Check the lock assembly operation. Adjust the lock assembly, if necessary.
5. Install the cab left-side bumper.

LOCK CAM HOOK

1. Remove the cam hook control rod cotter pin and washer.
2. Drop the cam hook down and disconnect the return spring from the small clevis pin.
3. Install the small clevis pin in the new hook with the hole end of the clevis pointing rearward.
4. Start the hook into position, and connect the hook return spring to the small clevis pin.
5. Start the large clevis pin through the forward side of the lock assembly, and then install two washers, the cam hook, one washer, the cam hook release lever, and one more washer on the clevis pin. Insert the clevis pin through the rearward side of the lock assembly, and install one washer and the clevis cotter pin.
6. Check the operation of the lock assembly, and adjust it if necessary.

SAFETY LATCH

1. Remove the lock assembly from the cab rear support.
2. Disconnect the latch return spring and the cam hook return spring.
3. Remove the safety latch clevis pin from the lock assembly, and remove the safety latch.
4. Install the clevis pin in the safety latch and the latch release lever, then insert the clevis pin through the lock assembly just far enough to hold it on the forward side.
5. Connect the cam hook return spring and the safety latch return spring.
6. Install the lock assembly in the radiator support.

HINGE PIN AND/OR BUSHING

Removal

The hinge pin bushing cap, bushing, and hinge pin are accessible from above through an access hole in the floor pan.

1. Because of the extreme upward pressure of the tilt assist springs when the cab is down, the cab must be strapped down before the hinge pin cap is removed. Measure the distance between one of the hinge to cab bolts and one of the bumper lower bolts. Drill holes, shape a piece of strap iron, and install the strap iron between these two bolts.
2. If the left hinge pin is to be removed, remove the steering shaft universal joint. If the right hinge pin is to be removed, move the transmission cross-shaft lever out of the way.
3. Make sure the cab is firmly locked down at the rear. Roll back the floor mat, and remove the small access hole cover, on the toe board (Fig. 4).
4. Remove the cap retaining bolts and the cap.
5. From underneath, remove the hinge pin retaining nut, and knock the hinge pin out of the bushing with a brass drift.

Installation

1. Lubricate the inside of the hinge pin bushing with Lubriplate, position the bushing in the hinge, and drive the hinge pin through the hinge and bushing.
2. Install the hinge pin retaining nut loosely.
3. Position the bushing cap, and install the cap retaining nuts.
4. Tighten the hinge pin retaining nut, and install the cotter pin.
5. Remove the strap iron hold down.
6. Install the access hole cover, and position the floor mats.

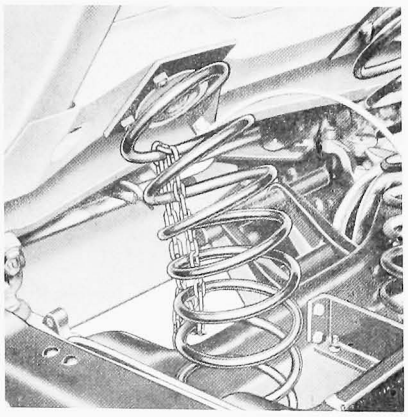

P1016-B

FIG. 5 Assist Spring Chained Down

TILT ASSIST SPRING

The tilt assist springs are loaded even when the cab is tilted up. Follow this procedure carefully to save time and avoid a possible mishap.

Removal

1. Raise the cab. Have a helper hold the cab part way down, and place a chain between the first full coil at the top and the third coil from the bottom. Take all the slack out of the chain, and fasten the links together with a bolt and nut (Fig. 5).
2. Raise the cab and lock the support arm.
3. Inside the cab, roll back the floor mat and remove the upper spring saddle retaining nut (Fig. 6).
4. From underneath, remove the lower spring saddle retaining nut.
5. Remove the upper and lower spring saddles and saddle bolts. Remove the spring. It is not necessary to remove the support plate above the spring unless it is damaged. It acts as a floor pan reinforcement only.
6. If the spring which was removed is not to be used, it will be necessary to compress it in a press to remove the chain. Use Tool T54T-1175-E (rear wheel grease retainer replacer) in the top of the spring because it provides a good bearing recess for the press ram. Use a good sized board (on top of a steel block) below the spring. Drive a nail in the board to keep the spring from slipping sidewise. Place the spring over the nail and compress the spring carefully. Stand to the side of the press in case the spring slips out. When the chain is slack, remove it, and release the spring slowly.

Installation

1. If the spring to be installed is not strapped down, it must be compressed and chained on one side before it is possible to install it.

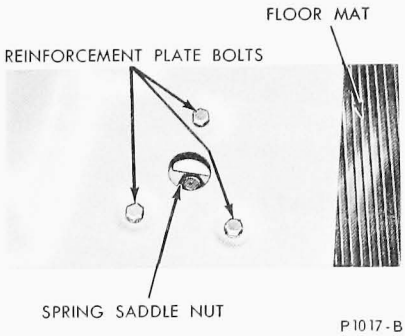

FIG. 6 Upper Spring Saddle Retaining Nut

In the press, place the spring over the nail in the board, place Tool T54T-1175-E in the top of the spring, and compress the spring until the measurement between the top of the first full coil and the bottom of the third full coil from the bottom is 9 inches (Fig. 7). Place the chain around these particular coils, take up all the slack, and fasten the links with a bolt and nut. The chain must be fastened in the above-mentioned coils or the spring will not bend properly when released. Also, the chain will interfere with the crossmember if fastened on any coil lower than the third from the bottom. Release the press slowly. Fig. 8 shows the spring tied down and ready for installation.

2. Position the tied down spring in the chassis, install the lower spring saddle and bolt, and run the nut on about three threads.
3. Install the upper spring saddle and bolt, and tighten the nut until all the slack is taken up.
4. Tighten the lower spring saddle bolt securely, and tighten the upper bolt.
5. Have a helper lower the cab about half-way, and remove the chain from the spring.

SLEEPER CAB

Removal

1. Disconnect the air hose retainer springs.
2. Remove the right and left upper ladder sections.
3. Remove the cab roof trim panels. Remove the sleeping compartment safety straps from the roof panel and remove the mattress and package tray trim panels. Using the upper ladder retainer bolt holes, attach suitable rope to the sleeping compartment to use as a lifting sling and attach a chain fall to the sling.
4. Remove the sleeping compartment-to-cab retaining bolts (Fig. 9).
5. With the aid of an assistant and the use of the chain fall, remove the sleeping compartment from the truck.

Installation

1. Apply sealer around the cab body opening (Fig. 9) and the seal surface of the sleeping compartment.
2. Position the upper back panel seal assembly on the truck cab.
3. With the aid of an assistant and a chain fall, position the sleeping compartment assembly on the truck. Be sure that the sleeping compartment-to-cab seal is properly positioned.
4. Remove the chain fall and sling.
5. Install the sleeping compartment-to-cab retaining bolts.
6. Install the cab roof trim panels, package tray trim panels, sleeping compartment mattress and the sleeping compartment safety straps.

BUMPER

Remove the bolts attaching the bumper to the bumper arms and remove the bumper from the vehicle. To install the bumper, position the bumper to the bumper arms and install the attaching bolts. Tighten the attaching bolts and nuts to 50-70 ft-lb (7/16 inch) and 75-105 ft-lb (1/2 inch) torque.

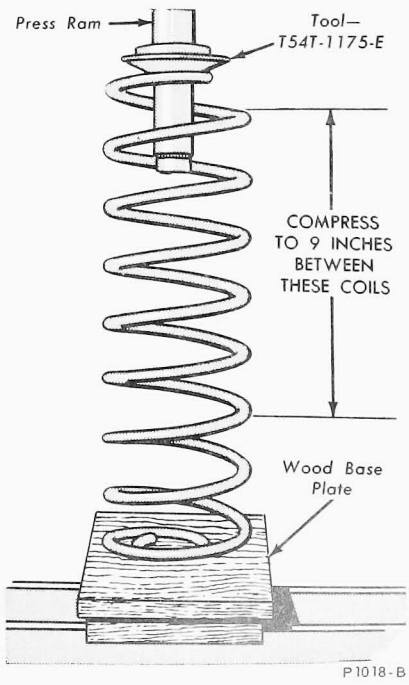

FIG. 7 Free Spring Mounted in Press

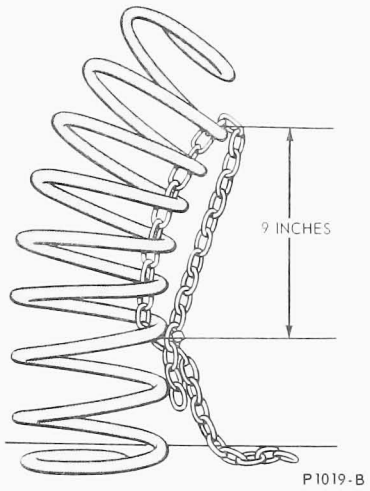

FIG. 8 Assist Spring Ready for Installation

EXTERIOR TRIM

The exterior trim installation and methods of trim attachment are shown in Fig. 10. When removing the exterior trim pieces, use care not to damage the vehicle exterior finish.

BODY SEALER

The sealer types are application procedures are given in General Information of Part 47-01. The test procedure for locating dust and water leaks is given in Diagnosis and Testing of Part 47-01.

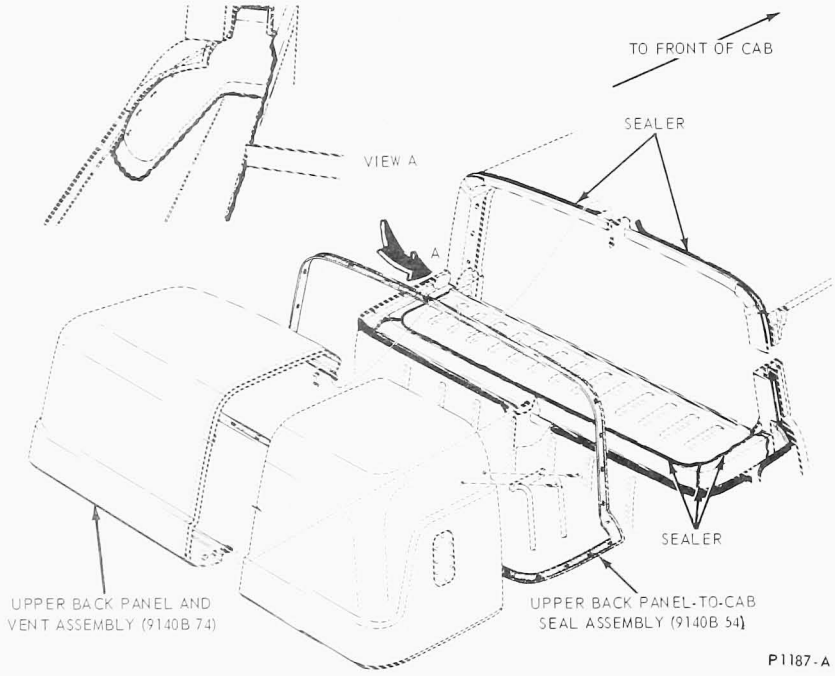

FIG. 9 Sleeper Cab Installation

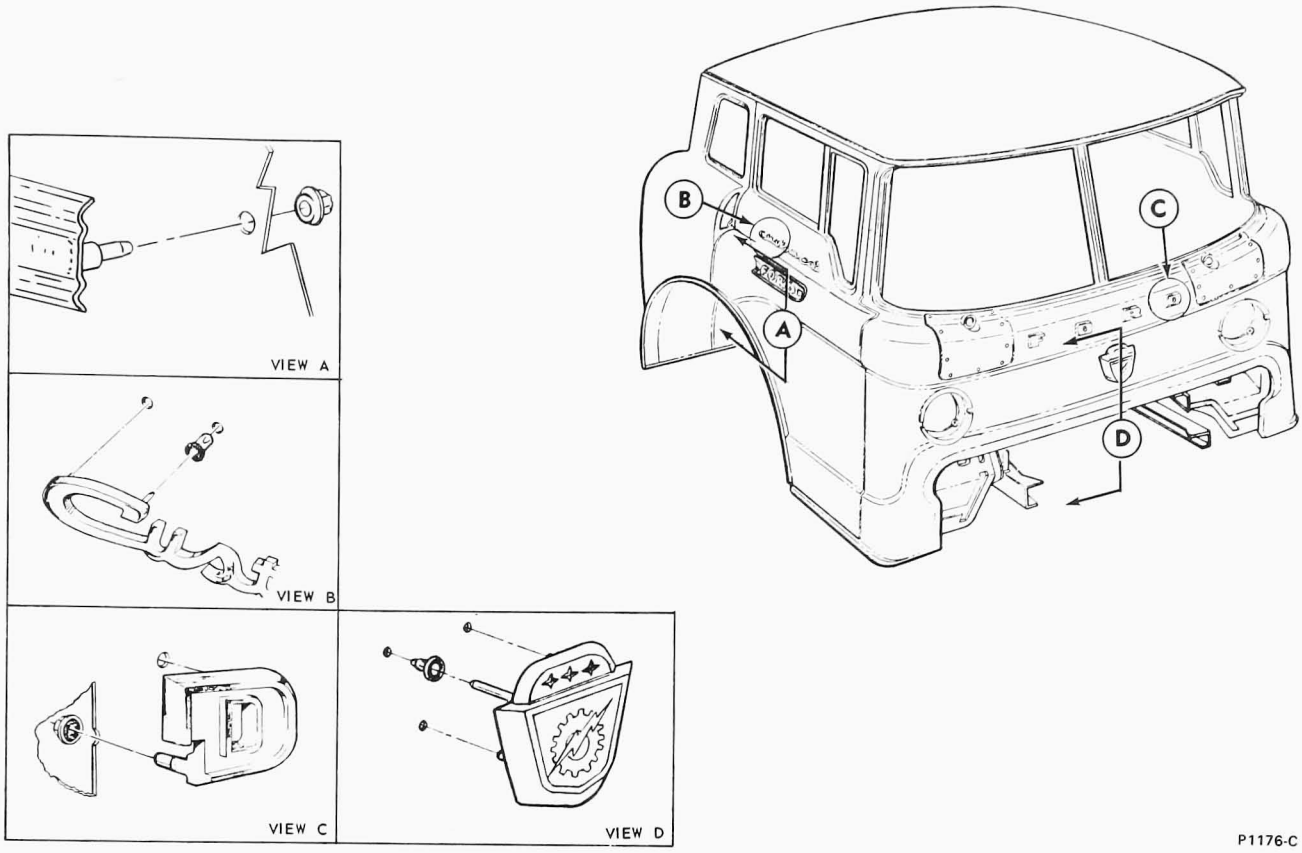

FIG. 10 C-Series Exterior Trim

PART 47-40 W-Series

COMPONENT INDEX	Page
ADJUSTMENTS	
Bleeding-Cab Tilt Hydraulic System	40-1
Checking Hydraulic System Fluid Level	40-1
Free-Fall Rate Adjustment	40-1
DESCRIPTION AND OPERATION	
Cab Tilt Mechanism	40-1
Tilting Instructions	40-1

COMPONENT INDEX	Page
REMOVAL AND INSTALLATION	
Body Sealer	40-4
Bumper-Front	40-2
Exterior Trim	40-4
Grille	40-2
Latch–Cab	40-2
Lower	40-4
Upper	40-2
Tilt Cylinder-Cab	40-2

DESCRIPTION AND OPERATION

CAB TILT MECHANISM

DESCRIPTION

The W-Series cab is raised and lowered with a hydraulic cylinder which is actuated by a hand operated pump. The pump is located on the right side behind the cab. The pump is a three piece assembly consisting of the pump body, a reservoir, and a control valve.

Two safety features are incorporated in the tilt mechanism hydraulic system. One is an orifice that controls the fluid flow through the system, and controls the free-fall rate of the cab. The second safety feature is velocity fuses which are located in the hydraulic cylinder. These fuses are similar to a ball check valve and will isolate one section of the system and stop movement of the cab in the event of a hose failure.

The cab is locked down and released by two hydraulic latches.

OPERATION

There are two tilt positions for the cab; the first is 50 degrees and the second is 80 degrees. A stop pin in the control arm assembly will stop the cab from going farther than 50 degrees. With the 50 degrees stop pin removed, the cab can then be tilted the full 80 degrees. Whenever the cab is tilted 80 degrees, the radiator lower front grille must be removed to prevent damage to the grille.

After the cab has been partially raised by hydraulic action, it will pass an overcenter position. When this point is passed, no further pumping action is necessary since the weight of the cab will provide the force for further tilting. A valve in the pump will keep the rate of movement under control for safe operation.

Reversing the pump control lever (which is integral with the pump) and operating the hydraulic pump will lift the cab toward the drive position. Once again when the over-center position is reached, the weight of the cab will complete the lowering operation.

CAB TILTING INSTRUCTIONS TO LIFT CAB TO THE 50 DEGREE TILT POSITION

1. Remove all loose articles from the cab.
2. Apply the parking brake; place the transmission in neutral.
3. Move the control valve lever to the lift position (lever all the way outboard against the stop). Check the air and electrical cables and hoses to be sure that they will not catch on the engine or chassis and become damaged when the cab is tilted.
4. Pump the cab up until it passes the balance point and begins to descend. The cab will stop at 50 degrees.

80-DEGREE TILT POSITION

1. Remove the lower front grille panel.
2. Tilt the cab to 50 degrees as described above.
3. Remove the 50 degree stop pin. Adjust the control valve to the down position, (lever all the way inboard against the stop). Pump the cab down slightly to free the pin. Remove the pin. Do not force the pump handle as internal damage to the pump may result.
4. Re-adjust the control valve handle to the lift position (lever all the way outboard). The cab will tilt forward to 80 degrees.

TO LOWER THE CAB

1. **Be sure the transmission shift lever is in neutral.**
2. Adjust the control valve to the down position (lever all the way inboard). Check the air and electrical cables and hoses to be sure that they will not be damaged as the cab is lowered.
3. Pump the cab until it passes the balance point and begins to descend.
4. **Replace the stop pin if tilted to 80 degrees.**

SPECIAL INSTRUCTIONS

If the cab stops during free-fall descent:

1. Adjust the control valve to the opposite position.
2. Pump a few strokes to release the hydraulic safety lock.
3. Return the control valve to its original position for cab descent.

ADJUSTMENTS

CAB FREE-FALL RATE ADJUSTMENT

The free fall rate of the tilt system is controlled by two set screws located in the control valve portion of the hydraulic pump (Fig. 1). The set screws adjust the stop positions of the control lever. This restricts or opens the valve internal ports to increase or decrease fluid flow, and thus controls the free-fall rate. The rate is preset at the factory and normally will not need adjusting. If however, the free-fall rate is too great, an adjustment should be made.

CHECKING TILT MECHANISM RESERVOIR HYDRAULIC FLUID LEVEL

Remove the filler plug and observe the fluid level. It should fill the standpipe in the reservoir. If the fluid level is low, add fluid to fill the standpipe. **Use only hydraulic fluid which meets the MIL-H-5606-B specification.**

HYDRAULIC TILT MECHANISM BLEEDING INSTRUCTIONS

The following procedure should be followed to bleed air from the tilt mechanism hydraulic system.

1. The cab must be in the down (driving) position.
2. Loosen the hydraulic hose at the left cab latch hose fitting. Slowly operate the pump until all air is bled from the hydraulic hose and only fluid comes from the fitting.
3. Tighten the hose fitting at the left cab latch.
4. Repeat Steps 2 and 3 to bleed air from the system at the right cab latch.
5. Loosen the hose fitting at the frame (rear) end of the tilt cylinder.
6. Remove the filler plug from the reservoir and fill the reservoir to the top with hydraulic fluid meeting MIL-H-5606-B specification. Do not install the filler plug.
7. Move the control valve lever to the up position and slowly operate the pump. **If the pump is operated too fast, all the air will not be removed from the system.**
8. Slowly operate the pump until there are no air bubbles in the fluid coming out around the loose cylinder fitting. Then, tighten the fitting while operating the pump.
9. Check the fluid level and add fluid until the reservoir is full to the top of the standpipe.
10. Place the control valve on the pump in the down position and loosen the vent plug on top of the tilt cylinder near the cab attachment.
11. Operate the pump slowly until there are no air bubbles in the fluid coming out around the loose vent plug. Then, tighten the plug while operating the pump. **Do not over tighten the plug. It should be tightened only to 14-16 in-lb torque.**
12. Check the fluid level and add fluid until the reservoir is full to the top of the standpipe. Then, install the reservoir filler plug.

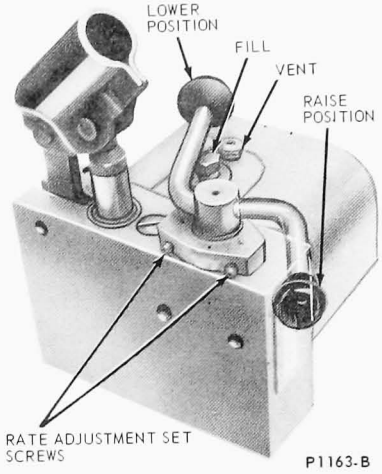

FIG. 1 Free-Fall Rate Adjustment

REMOVAL AND INSTALLATION

GRILLE

To remove the lower radiator grille it is necessary to remove the four retaining bolts. The upper radiator grille can be removed by removing the nine retaining screws from around the outer edge of the grille. Installation of the grille(s) can be accomplished by positioning the grille(s) to the vehicle and installing the retaining screws and/or bolts.

FRONT BUMPER

Removal

1. Disconnect the horn wire from the horn attached to the bumper.
2. Remove six of the eight bolts and nuts attaching the bumper to the bumper arms.
3. Remove the remaining two bolts and nuts and remove the bumper from the vehicle.
4. Remove the horn and license plate from the bumper if the bumper is to be replaced.

Installation

1. Install the horn and license plate on the front bumper.
2. Position the bumper to the vehicle and install one bolt and nut at each end of the bumper. Then, install the remaining six bolts and nuts and tighten all bolts and nuts to 75-105 ft-lb torque.
3. Connect the wire to the horn and check the operation of the horn.

CAB TILT CYLINDER

Removal

1. Remove the radiator lower grille from the front of the cab.
2. Release the cab latch and raise the cab. Then, remove the pin from the cab support arm and tilt the cab to the 80 degree position.
3. Place support stands under the top front edge of the cab. Use care to prevent damage to the cab or the paint.
4. Release the pressure from the tilt cylinder by moving the control valve

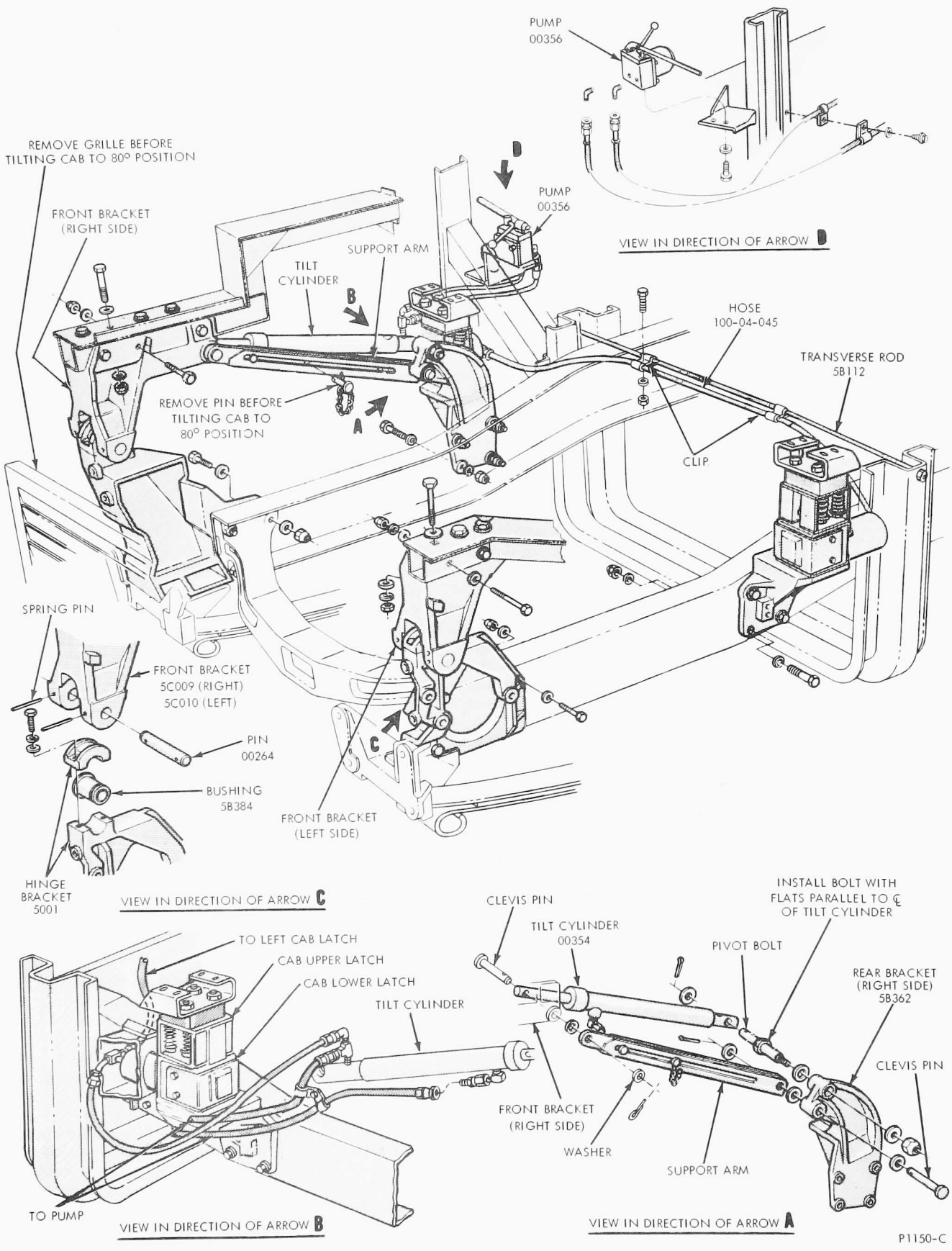

FIG. 2 Cab Tilt Mechanism—W-Series

lever to the down position.
5. Remove the cotter pin and washer from the tilt cylinder clevis pin and remove the clevis pin and washer from the front bracket (Fig. 2).
6. Remove the cotter pin and washer from the tilt cylinder pivot bolt (Fig. 2) and remove the cylinder from the pivot bolt.
7. Position a drain pan under the tilt cylinder. Disconnect the hoses from the fittings on the tilt cylinder and allow the fluid to drain from the hoses and cylinder.

Installation
1. Apply Loctite Sealer (C3AS-19554-A) to the threads of the cylinder fittings and connect the hoses to the fittings. Bleed all air from the hydraulic lines and cylinder as outlined in Adjustments.
2. Position the cylinder on the pivot bolt (Fig. 2), and install the washer and cotter pin.
3. Position the support arm, washer, and tilt cylinder to the front bracket (Fig. 2). Install the clevis pin. Position the washer on the clevis pin and install the cotter pin.
4. Raise the cab to the 50 degree tilt position and install the pin in the cab support arm. Then lower the cab and check the cylinder and hose connections for leaks.

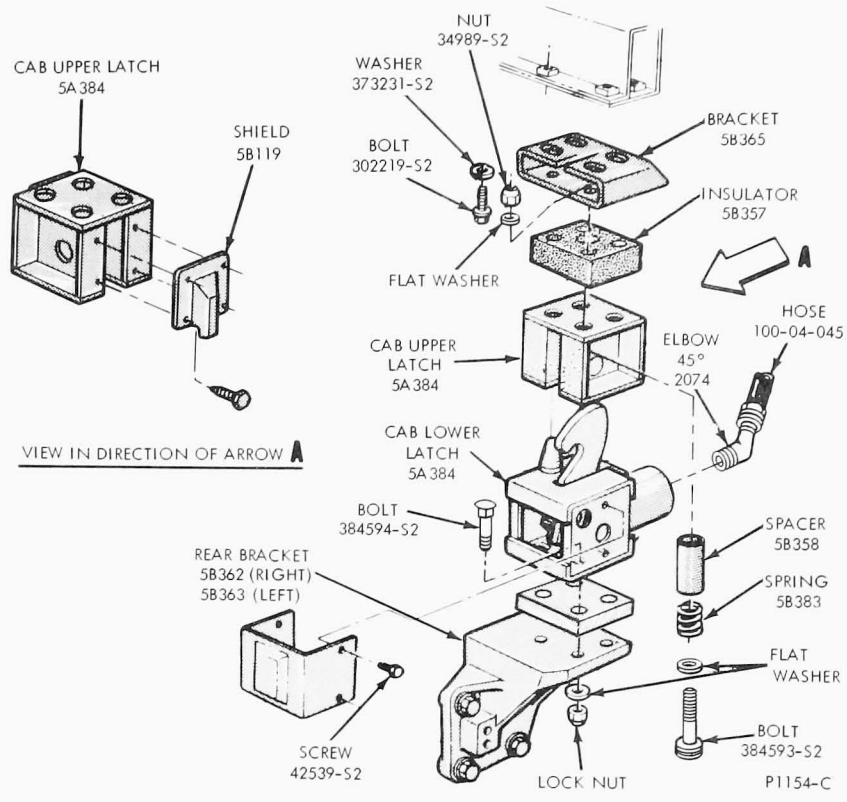

FIG. 3 Cab Latch Disassembled

CAB UPPER LATCH AND/OR INSULATOR

Removal
1. Tilt the cab.
2. Remove four bolts and washers attaching the cab upper latch, insulator, and bracket to the cab (Fig. 3) and remove as an assembly.
3. Remove four nuts, bolts, springs, washers, and bushings attaching the latch, insulator, and bracket together and separate the latch from the insulator and bracket.

Installation
1. Place the insulator and bracket on the latch and install the spacers, springs, washers, bolts, and nuts (Fig. 3) and tighten to 36-44 ft-lb torque.

Different insulators are used on the sleeper cab than on the standard cab. Be sure that the correct insulator is used if replacement is necessary.

2. Position the latch, insulators, and bracket assembly to the cab and install the four attaching bolts and washers.
3. Lower the cab and check the alignment of the upper latch with the lower latch. Align the two latches as required.

CAB LOWER LATCH

Removal
1. Tilt the cab to the 50 degree position.
2. Disconnect the hydraulic hose from the cab latch fitting.
3. Remove the dust shield from the latch.
4. Remove four nuts, bolts, and eight washers attaching the lower latch to the latch bracket (Fig. 3).
5. Remove the latch from the latch bracket.

Installation
1. Position the latch to the latch bracket and install the attaching bolts, washers, and nuts (Fig. 3).
2. Connect the hydraulic hose to the cab latch fitting. Leave the fitting 1/4 turn loose.
3. Operate the hand pump slowly to expel all air from the cab latch at the fitting.
4. Fill the pump reservoir with the specified hydraulic fluid (Adjustments Section).
5. Check the alignment of the upper latch and lower latch.
6. Install the dust shield on the latch.
7. Lubricate the latch mechanism as outlined in Adjustments.

EXTERIOR TRIM

The exterior trim installation and methods of trim attachment are shown in Fig. 4. When removing the exterior trim pieces, use care not to damage the vehicle exterior finish.

BODY SEALER LOCATIONS

The body sealer locations are shown in Figs. 5 thru 11. The sealer types and application procedures are given in General Information of Part 47-01. the test procedure for locating dust and water leaks is given in Diagnosis and Testing of Part 47-01.

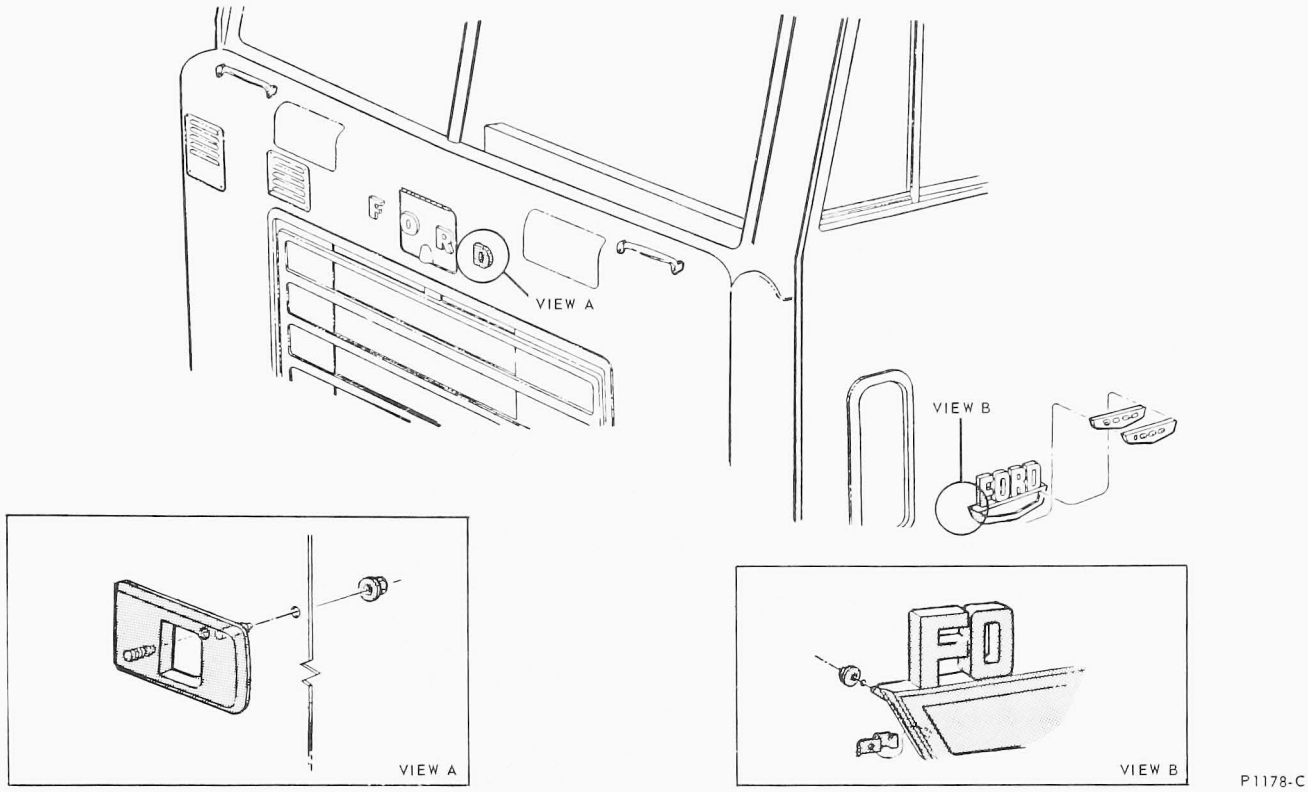

FIG. 4 W-Series Exterior Trim

PART 47-51 Bronco

COMPONENT INDEX	Page	COMPONENT INDEX	Page
REMOVAL AND INSTALLATION		Front Fender	51-2
Body Sealer	51-3	Grille	51-1
Bumper	51-3	Long Roof	51-3
Frame Dimensions	51-3	Short Roof	51-3

REMOVAL AND INSTALLATION

GRILLE

Removal

1. Unlatch and raise the hood. Secure the hood in the open position with the catch on the windshield.
2. From the front under side of the left and right front fenders, remove the eight screws that secure the grille to the front fenders (Fig. 1).
3. Disconnect the left and right headlight bulb connectors and the parking light lead connectors.
4. Remove the six screws that secure the left and right headlight rims to the grille.
5. Remove the six screws that secure the left and right headlight adjusting rings to the grille brackets. Remove both headlight assemblies and the two ring springs.
6. Remove the three bolts that secure the hood hold-down latch on the grille to the radiator support assembly top rail.
7. Remove the grille assembly.
8. Remove the four bolts that secure the hood hold-down latch to the grille bracket. Remove the latch from the grille bracket.
9. Remove the four nuts and lock washers that secure the left and right parking lights to the grille. Remove both parking light assemblies.

Installation

1. Position the parking light assemblies in the grille openings and secure each light with two lock washers and nuts.

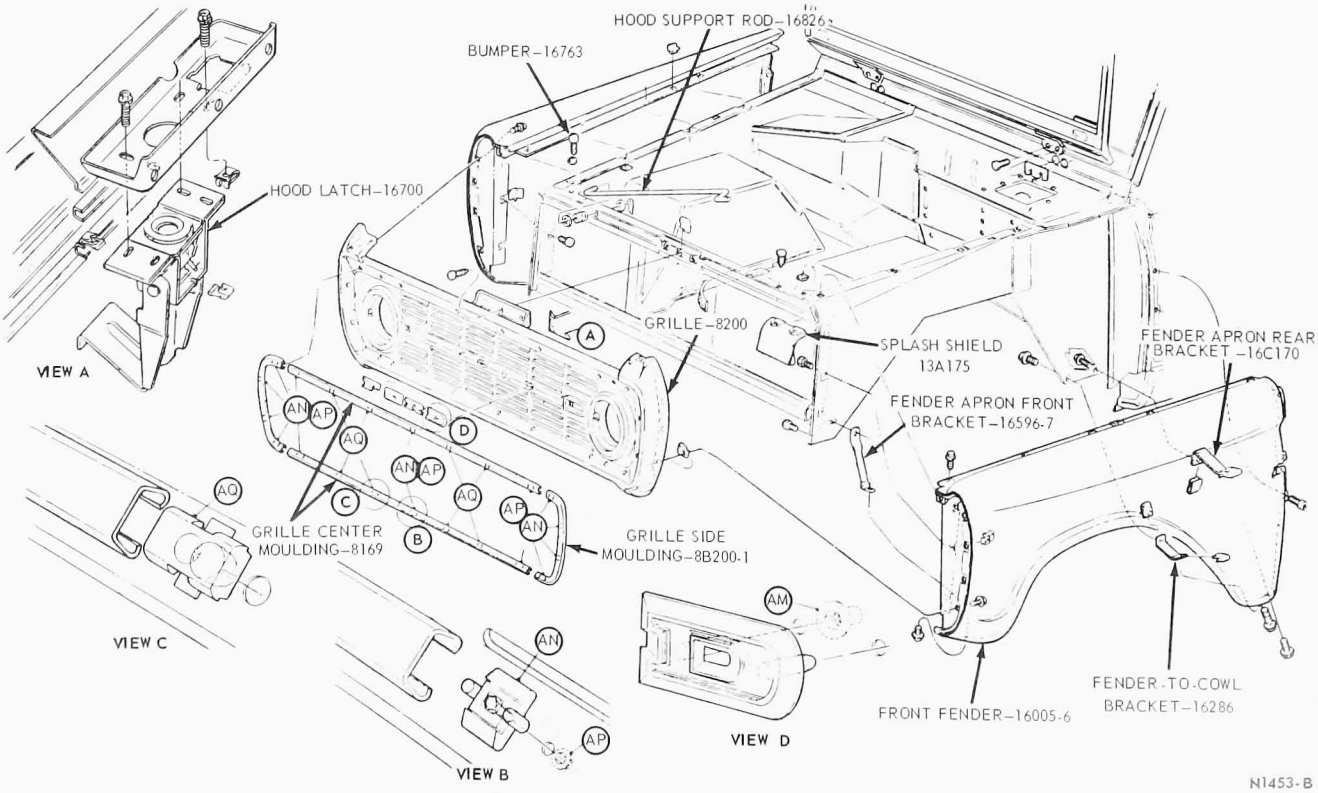

FIG. 1 Bronco grille, Fender and Hood Installation

2. Position the hood hold-down latch on the underside of the grille latch bracket and install four mounting screws.
3. Position the grille assembly and install the three bolts that secure the top center of the grille to the radiator support assembly top rail (Fig. 1).
4. Install the eight screws that secure the grille to the left and right front fenders.
5. Position the headlight assemblies and the ring springs on the headlight mounting brackets. Secure each assembly with three screws. **Before installing the headlight rims, the headlights must be adjusted.**
6. Perform the headlight adjustment procedures contained in Group 32.
7. Position the headlight rims and secure each rim with three screws.
8. Connect the headlight bulb connectors and parking light lead connectors.
9. Release the hood from the windshield catch and close the hood. The hood hold-down latch can be adjusted by loosening the latch mounting screws and shifting the latch until the hood lock catch centers in the latch opening. Tighten the latch mounting screws.

FRONT FENDER

The front fenders and related parts are shown in Fig. 1. Both front fenders and the grille can be removed as an assembly if necessary.

Removal

1. Unlatch and raise the hood. Secure the hood in the open position with the catch on the windshield.
2. From the front underside of the fender remove the four screws that secure the fender to the grille, and then remove the three screws that secure the fender to the apron and radiator support assembly.
3. Remove the screw from the fender flange that secures the front fender bracket to the fender.
4. Open the vehicle door and remove the three screws that secure the fender to the cowl hinge pillar.
5. Remove the screw from the lower fender flange that secures the rear fender bracket to the fender skirt.
6. While holding the fender in position, remove the five screws that secure the topside of the fender to the side apron. remove the fender.

Installation

1. Apply a bead of sealer on the fender mating surface of the side apron and on the front and rear mating surfaces of the fender.
2. Position the fender on the vehicle and install the five screws that secure the fender to the top of the side apron.
3. Secure the fender to the cowl hinge pillar with three screws.
4. Secure the apron and radiator support assembly with three screws and then secure the fender to the grille with four screws.
5. Secure the front and rear fender brackets to the fender with screws.
6. Release the hood from the windshield catch and close the hood.

BUMPER

Remove the bolts retaining the bumper to the bumper arms and remove the bumper from the vehicle. To install the bumper, position the bumper to the bumper arms and install the retaining bolts.

SHORT ROOF

Removal

1. Open the vehicle doors, and from inside the cab, remove the eight screws and lock washers that secure the short roof (Fig. 2) to the windshield frame retainers. Remove the retainers.
2. From inside the vehicle, remove the bolt, lock washer, and nut at the front of each side panel, and the six screws and lock washers that secure the short roof to the cargo compartment front panel and the cargo compartment front panel retainers (Fig. 2). Remove the retainers.
3. With the aid of a hoist or helpers, remove the short roof from the vehicle.

Installation

1. Before installing the short roof on the vehicle, inspect the weatherstrips attached to the windshield frame mating rail and the cargo compartment front panel mating rail (Fig. 2). Damaged weatherstrips should be replaced.
2. Apply adhesive to the roof and weatherstrip mating surface.
3. Position the short roof on the vehicle, making sure that the alignment dowels drop in the alignment dowel holes.
4. Check the alignment of the roof with the windshield frame and the cargo compartment front panel. When properly aligned, install the two bolts, lock washers, and nuts securing the short roof to the body side panels, the six screws and lock washers securing the roof to the cargo compartment front panel retainers, and the eight screws and lock washers securing the front of the roof to the windshield frame retainers. **Apply a daub of sealer (AB-19560-A) to each attaching screw or bolt hole before installation of the screws or bolts.**

LONG ROOF

Removal

1. Open the vehicle doors, and from inside, remove the eight screws and lock washers that secure the long roof (Fig. 3) to the windshield frame retainers. Remove tthe retainers.
2. From inside the cargo body, remove the bolt, lock washer, and nut at the front of each side panel, and the 12 screws and lock washers that secure the long roof to the cargo bed side rail and the side rail retainers (Fig. 3). Remove the retainers.
3. With the aid of a hoist or helpers, remove the long roof from the vehicle.

Installation

1. Before installing the long roof on the vehicle, inspect the weatherstrips attached to the mating surfaces of the roof side rails. Worn or damaged weatherstrips should be replaced. Inspect the mating cargo bed side rails. If they are bent or damaged, straighten and repair them as necessary.
2. Apply adhesive to the roof and weatherstrip mating surfaces.
3. Position the long roof on the vehicle making sure that the alignment dowels drop in the alignment dowel holes and the weatherstrips are in proper position.
4. Check the alignment of the roof with the door window frames, windshield frame, and tailgate. When properly aligned, install the two bolts, lock washers and nuts securing the front of the roof side panels to the body side panels, the 12 screws and lock washers securing the roof to the cargo bed side rail retainers, and the 8 screws and lock washers securing the front of the roof to the windshield frame retainers. **Apply a daub of sealer (AB-19560-A) to each attaching screw or bolt hole before installation of the screws or bolts.**

FRAME DIMENSIONS

The Bronco Frame Dimensions are shown in Fig. 4. The frame checking and repair procedures are given in Part 47-01.

BODY SEALER

The body sealer locations are shown

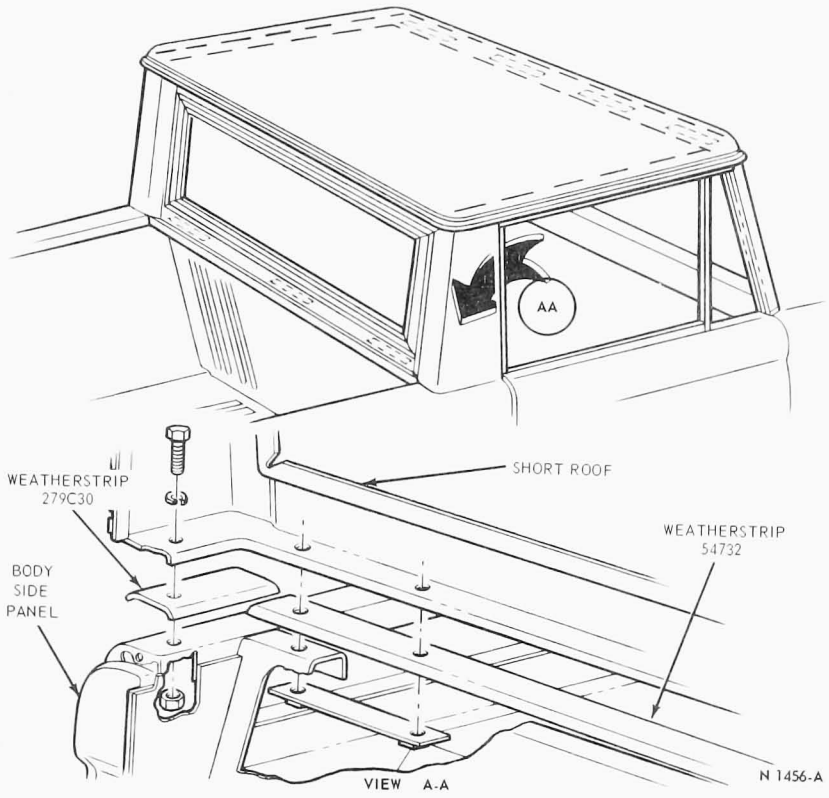

FIG. 2 Bronco Short Roof Installation

in Figs. 5 thru 10. The sealer types and application procedures are given in General Information of Part 47-01. The test procedure for locating dust and water leaks is given in Diagnosis and Testing of Part 47-01.

EXTERIOR MOULDINGS

Before removing the exterior mouldings (Fig. 5), determine by the type of retainer used if it is necessary to remove an interior trim panel. If a weld stud is distorted or broken off, it should be replaced with a screw (379560-S101).

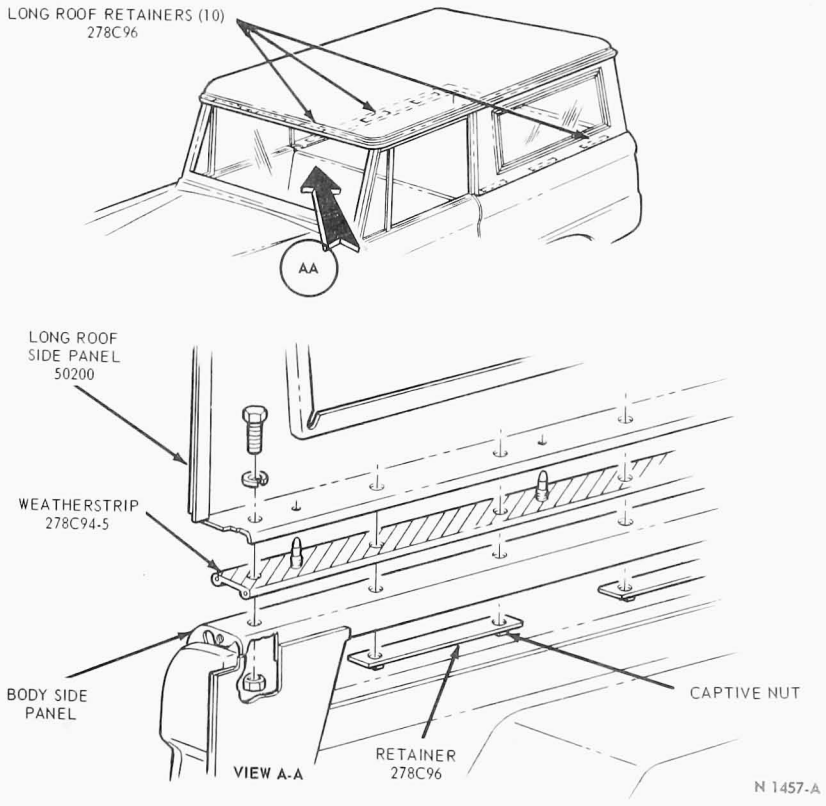

FIG. 3 Bronco Long Roof Installation

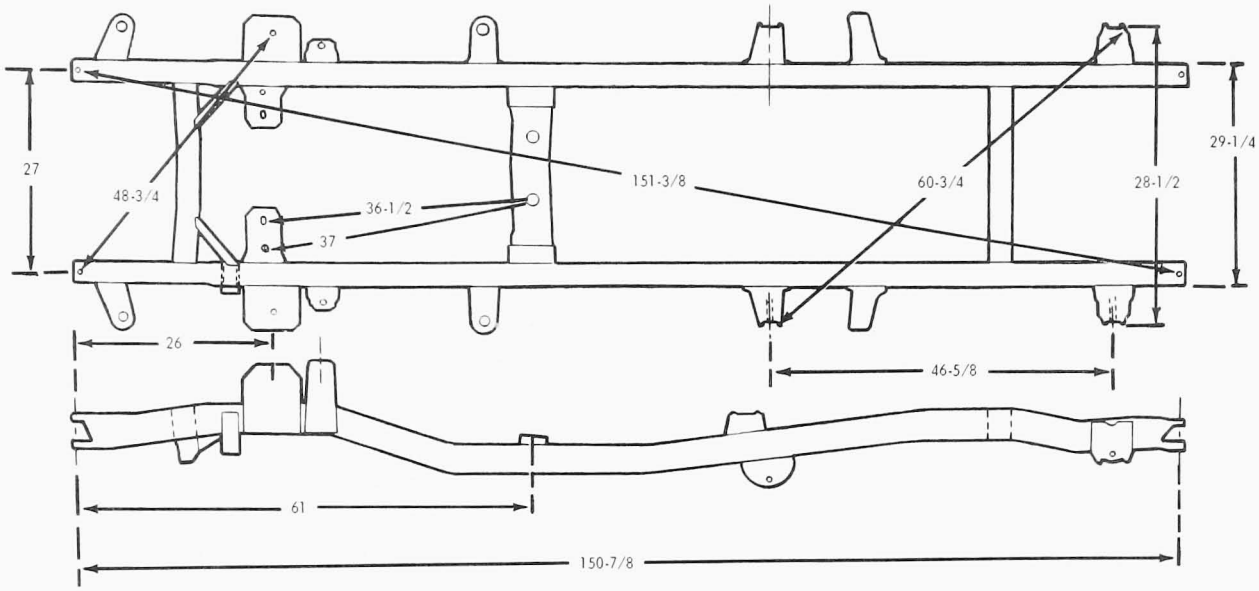

NOTE: ALL DIMENSIONS SHOWN SHOULD BE PROJECTED DOWNWARD AND MEASURED ON A LEVEL SURFACE. DIMENSIONAL VARIATIONS MUST BE IDENTICAL ON BOTH SIDES. VARIATIONS ON DIAGONAL UNDERBODY DIMENSIONS MUST ALSO BE IDENTICAL.

N 1452-A

FIG. 4 Bronco Frame Dimensions

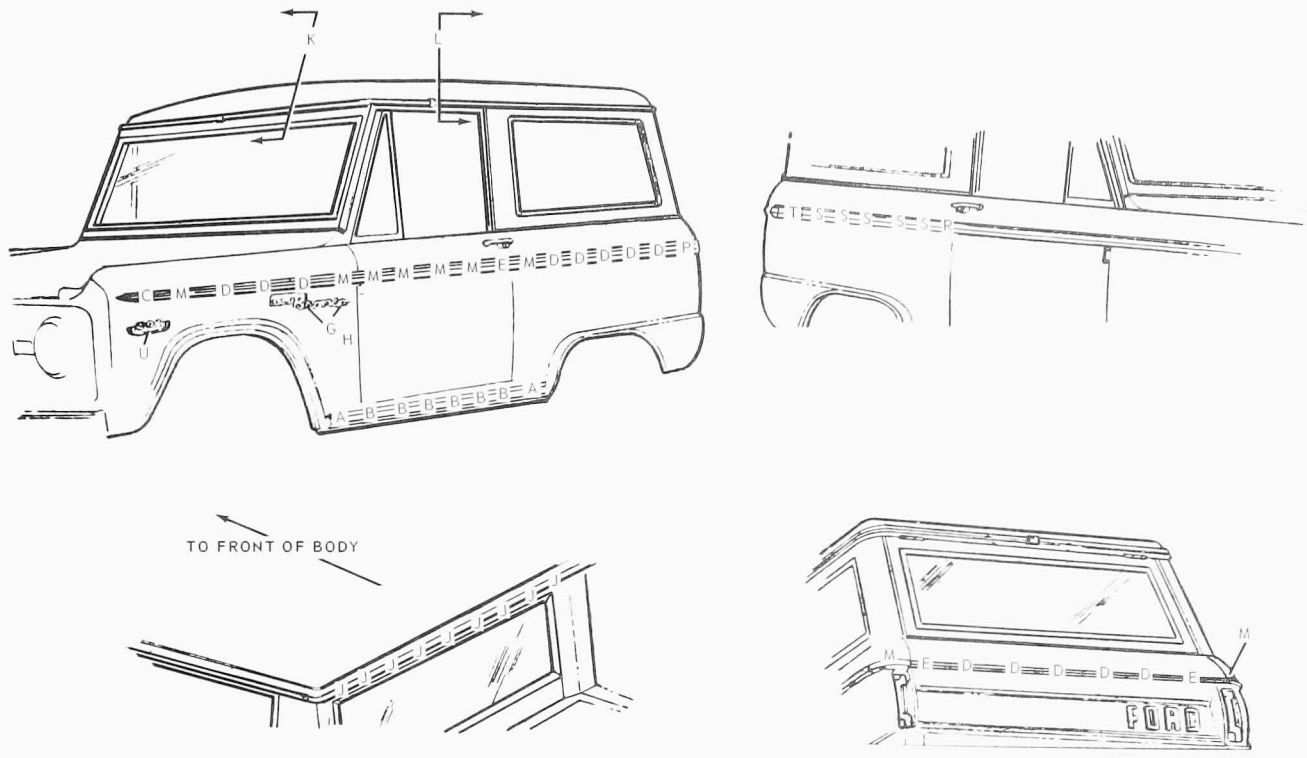

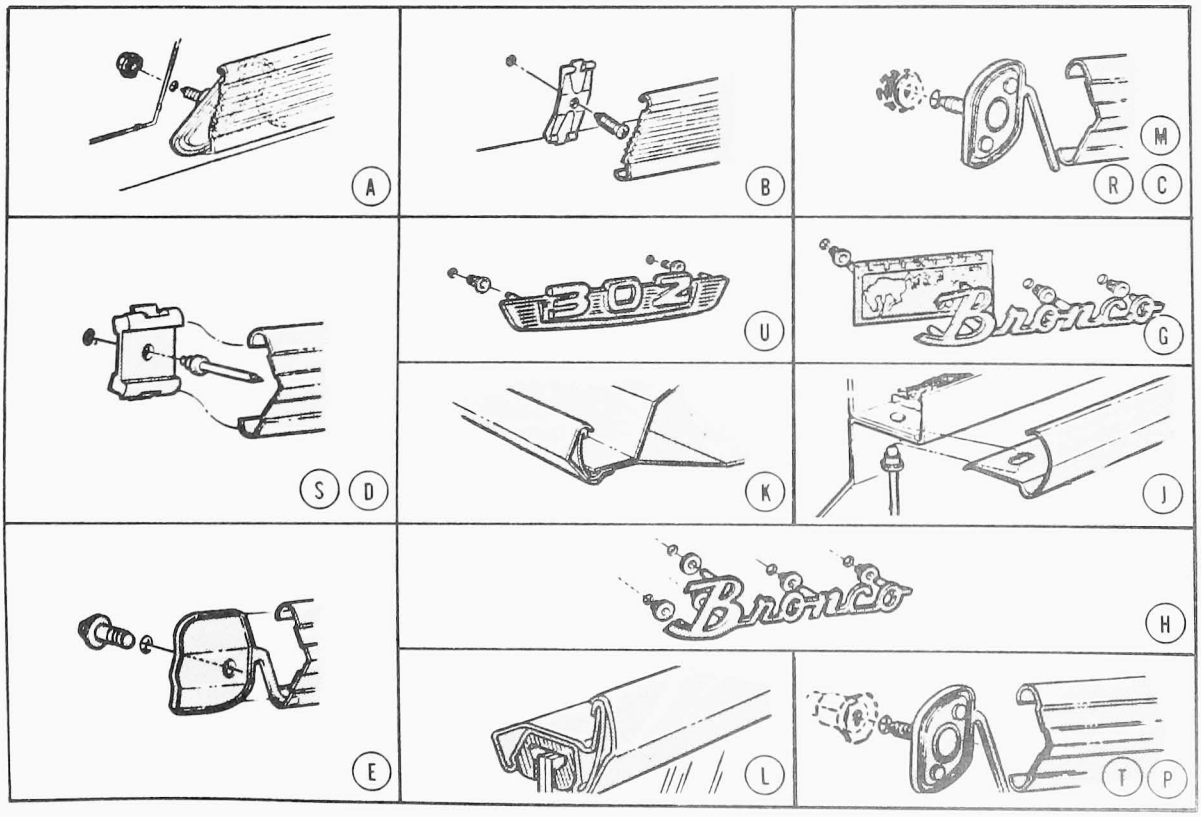

P1199-A

FIG. 5 Exterior Mouldings—Bronco

PART 47-52 Econoline and Club Wagon

COMPONENT INDEX	Page	COMPONENT INDEX	Page
ADJUSTMENTS		REMOVAL AND INSTALLATION - Cont.	
Body Alignment	52-01	Body Sealer	52-04
Checking Underbody	52-01	Bumper	52-04
REMOVAL AND INSTALLATION		Exterior Mouldings	52-04
Auxiliary Step	52-04	Grille	52-04

ADJUSTMENTS

CHECKING UNDERBODY

The dimensions of the underbody must be restored in the repair of major body damage, to provide correct front and rear wheel geometry (Fig. 1). All the dimensions are detailed to the centerline of existing holes in the underbody assembly. Once the frame and suspension members are aligned, the balance of the repair can be performed.

BODY ALIGNMENT

Servicing the Econoline unitized body should present no unusual difficulties or necessitate additional equipment other than that required for the conventional frame and body repair.

The application of heat and the use of heavy-duty jacks must be carefully controlled because of the difference in the gauge of the metal in the sub-frame of a unitized body and the stress points developed in a single welded unit construction. It is possible to pull damaged areas back into alignment with the use of light-weight jacks and hydraulic equipment without heating the metal. The Bronco body is a welded, assembled unit installed on a conventional type frame. The front fenders are removable, and when installed, require sealing at the door post pillars, front grille, and along the seams of the side aprons.

Rough out badly damaged areas before taking measurements for squaring up a body. If necessary, remove the glass from the damaged area to prevent damage. In severe cases, reinforcement brackets and other inner construction may have to be removed or cut to premit restoration of the outer shell and pillars without excessive strain on the parts. Straighten, install, and secure all such parts in place before attempting to align the body.

In cases of severe or sharp bends, it may be necessary to use heat. Any attempt to cold-straighten a severely bent bracket may cause ruptures of the welds and may also cause cracks in the bent part. Never heat the area more than a dull red.

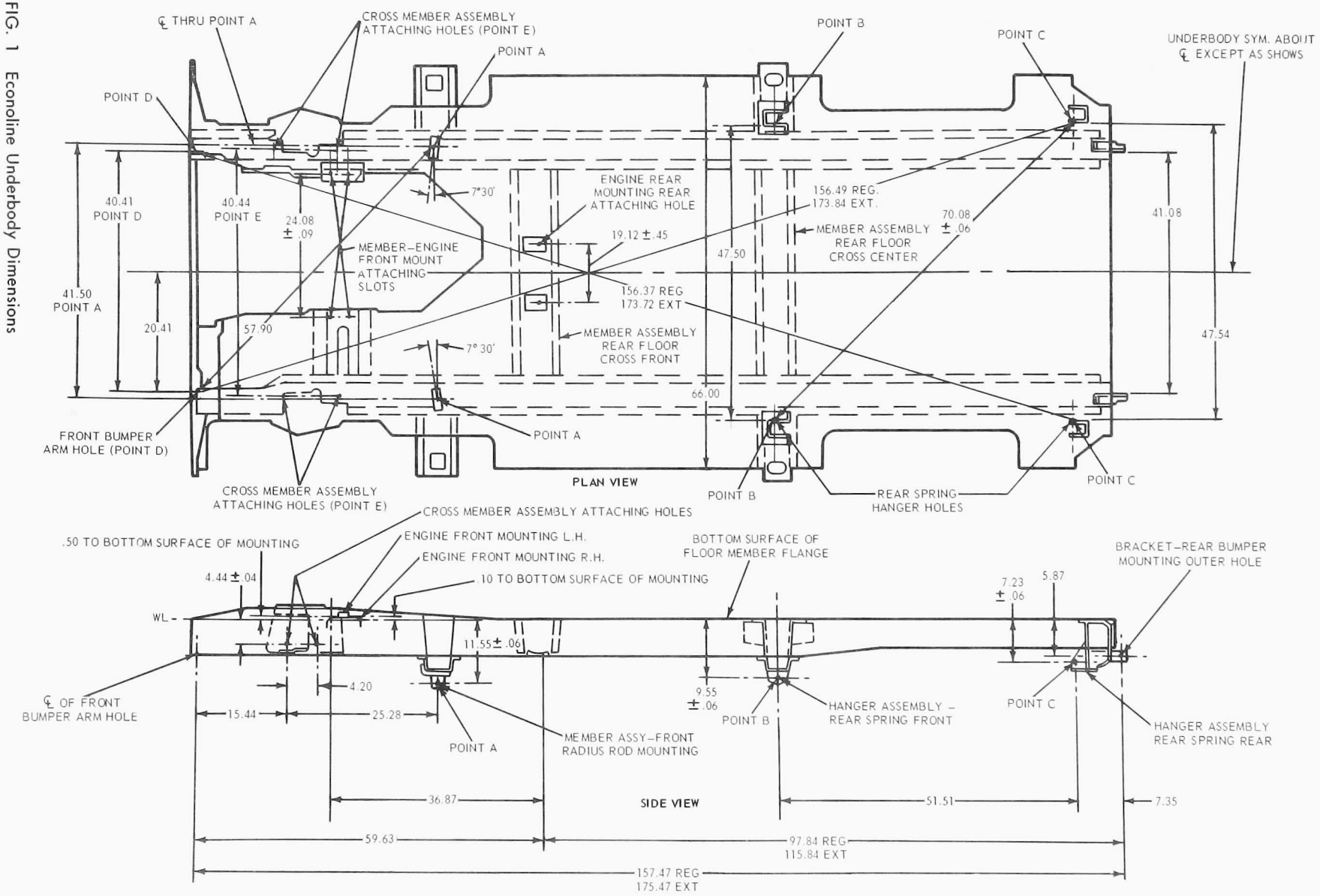

FIG. 1 Econoline Underbody Dimensions

REG – REGULAR BODY 105.5 W/B
EXT – EXTENDED BODY 123.5 W/B

ALL DIMENSIONS SHOWN ARE ±12 UNLESS OTHERWISE SHOWN AND SHOULD BE PROJECTED DOWNWARD AND MEASURED ON A LEVEL SURFACE. DIMENSIONAL VARIATIONS MUST BE IDENTICAL ON BOTH SIDES. VARIATIONS ON DIAGONAL UNDERBODY DIMENSIONS MUST ALSO BE IDENTICAL.

REMOVAL AND INSTALLATION

GRILLE

Removal

1. Remove the headlight doors, bulbs, and ring assemblies.
2. Remove five screws attaching the bottom edge of the grille to the front body member (Fig. 2).
3. Remove one screw attaching the hood latch support to the top edge of the grille.
4. Disconnect the parking light wires at the multiple connectors.
5. Remove one screw attaching each grille upper support (right and left) to the grille, and remove the grille.
6. Remove the hood support and two retainer clips from the grille (Fig. 2).
7. Remove the parking lights from the grille.
8. Remove the license plate and retainers from the grille.

Installation

1. Install the license plate and retainers, parking lights, and the hood support and retainer clips on the grille.
2. Position the grille to the vehicle and install the two upper support attaching screws (Fig. 2).
3. Install the five screws attaching the bottom of the grille to the body front member (Fig. 2).
4. Position the hood latch support to the grille and install the attaching screw.
5. Connect the parking light wires at the multiple connectors.
6. Install the headlight bulbs, doors, and ring assemblies. Then, adjust the headlights.

BUMPER

Remove the bolts retaining the bumper to the bumper arms and remove the bumper from the vehicle. To install the bumper, position the bumper to the bumper arms and install the retaining bolts.

AUXILIARY STEP

Removal

1. Disconnect the actuating lever rod from the door bracket.
2. Remove the cover from the actuating lever.
3. Remove the actuating lever rod from the actuating lever (Fig. 3).
4. Working under the vehicle, remove two screws attaching the step to the frame member (Fig. 3).
5. Remove one screw and nut attaching each end of the step to the body side flange at each end of the weatherstrip (Fig. 3).
6. Support the auxiliary step. Then, remove six screws attaching the step to the floor pan, and remove the step.

Installation

1. Lubricate the step hinge and pivot points with SAE 30 motor oil.
2. Position the auxiliary step to the vehicle, and install six screws attaching the stop to the floor pan.
3. Install two screws attaching the step to the frame member (Fig. 3).
4. Install two screws and nuts attaching the step to the body side flange.
5. Install the actuating lever rod on the actuating lever, and install the cover.
6. Connect the actuating lever rod to the door bracket (Fig. 3).

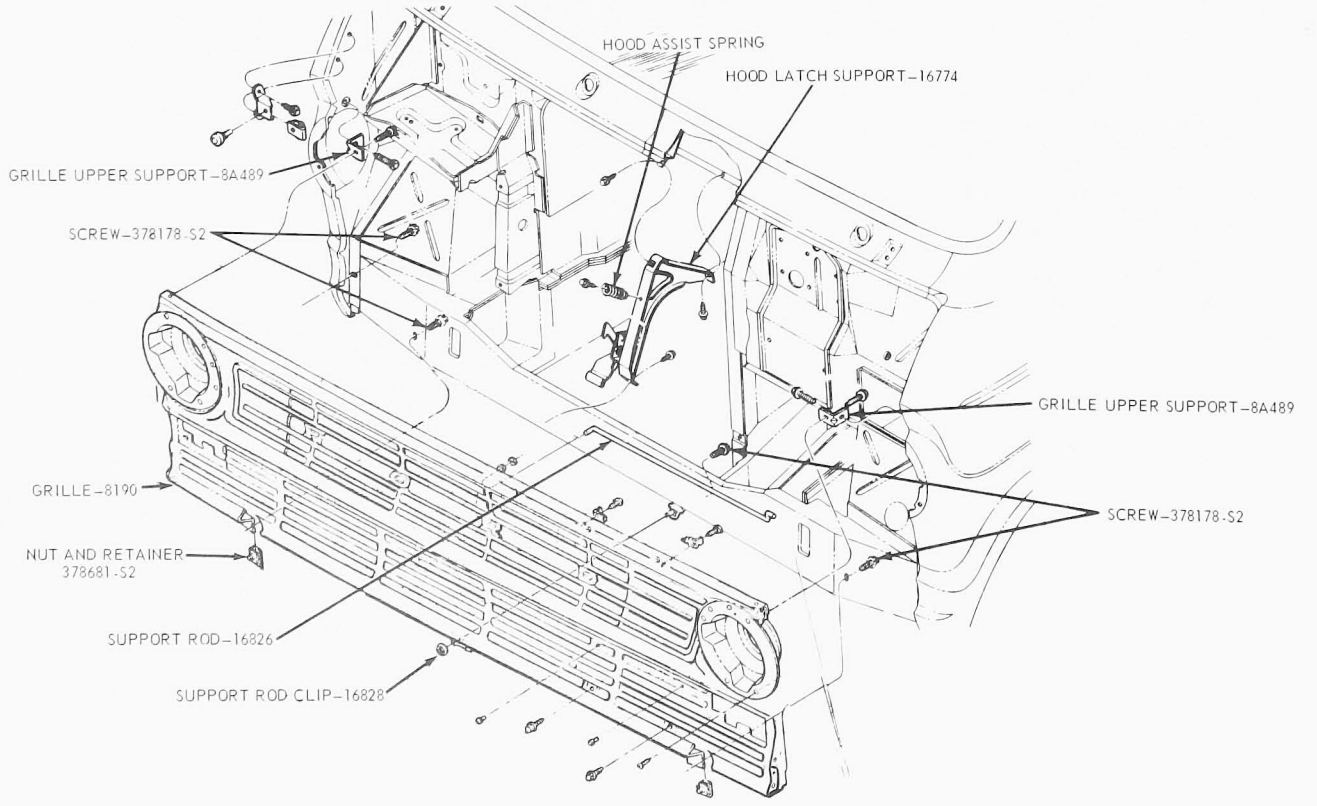

FIG. 2 Econoline Grille Installation

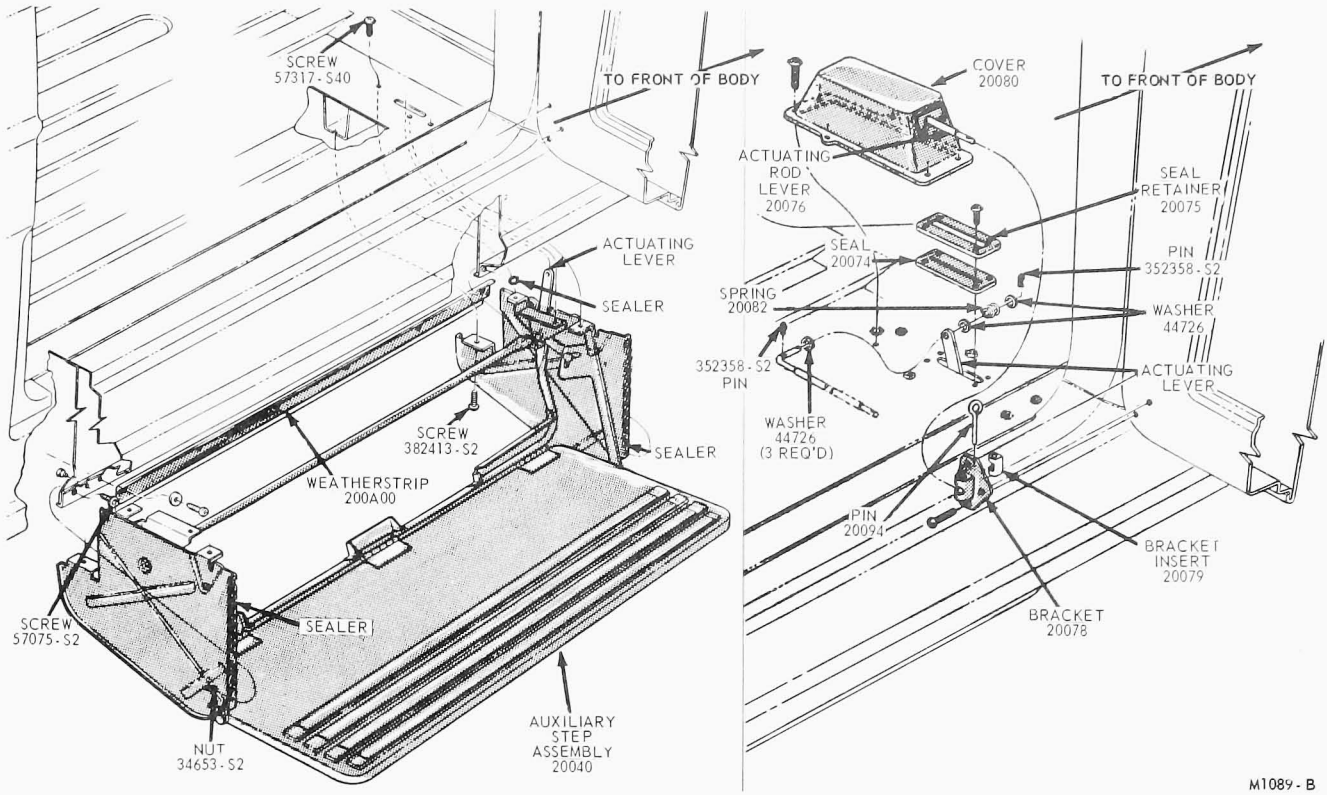

FIG. 3 Side Door Auxiliary Step Installation— Econoline

EXTERIOR MOULDINGS

Before removing the exterior mouldings, determine by the type of retainer used if it is necessary to remove an interior trim panel (Figs. 4 thru 6). If a weld stud is distorted or broken off, it should be replaced with screw (379560-S101).

BODY SEALER

The sealer types and application procedures are given in General Information of Part 47-01. The test procedure for locating dust and water leaks is given in Diagnosis and Testing of Part 47-01.

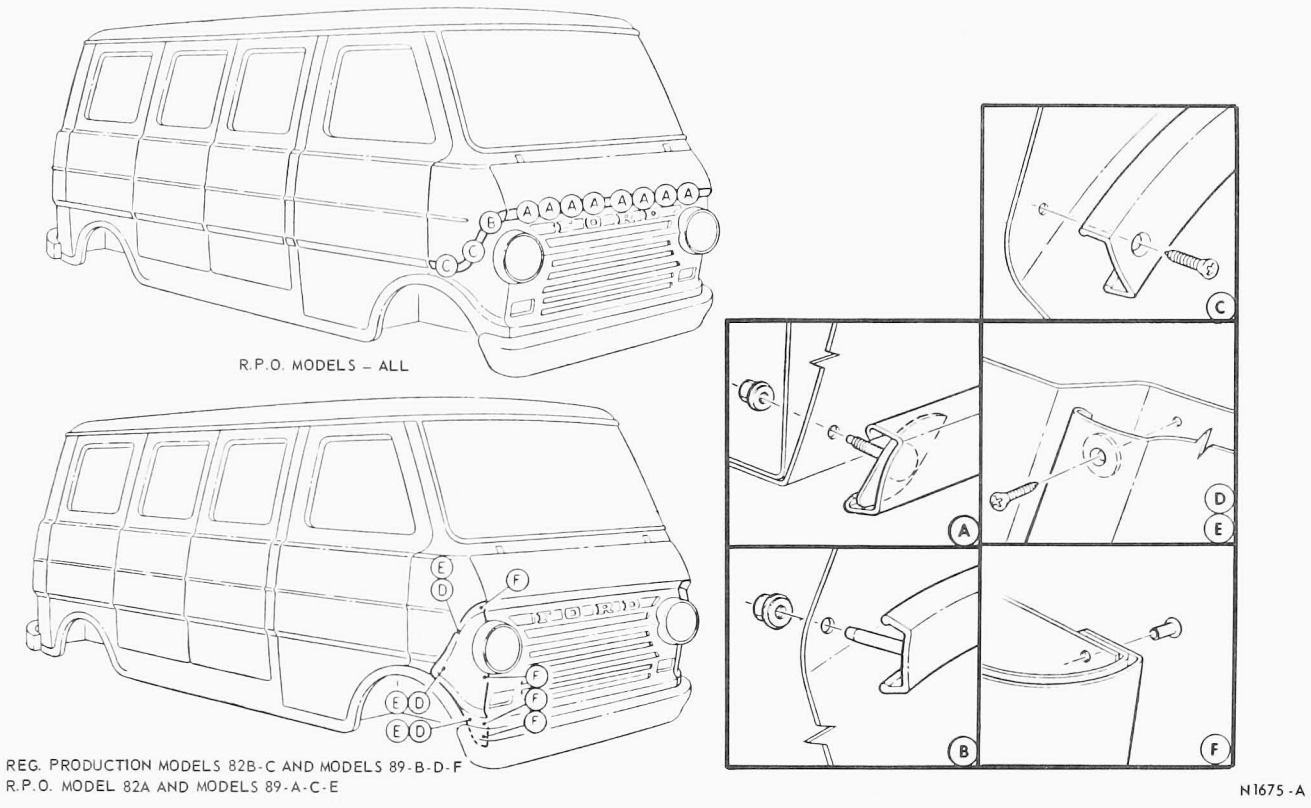

FIG. 4 Econoline Exterior Front Mouldings

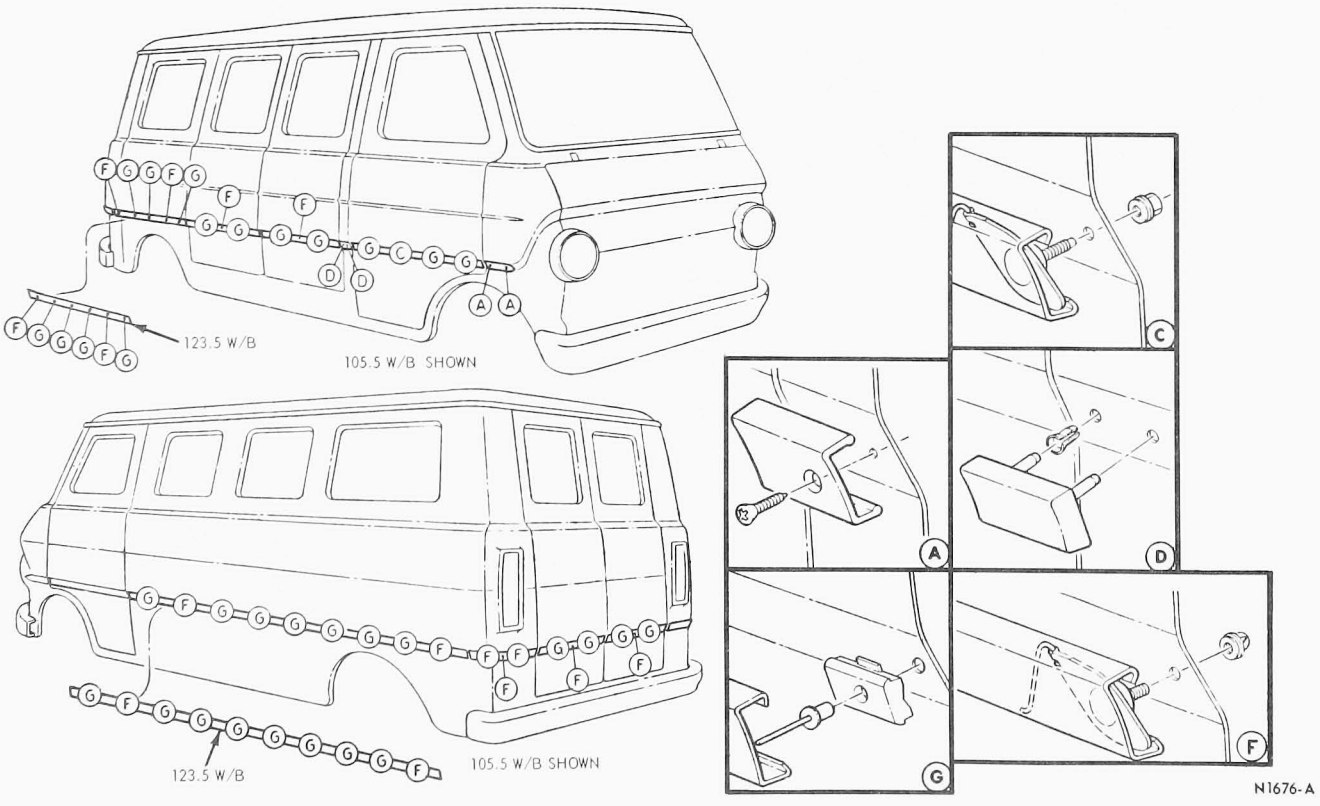

FIG. 5 Econoline Side and Rear Mouldings

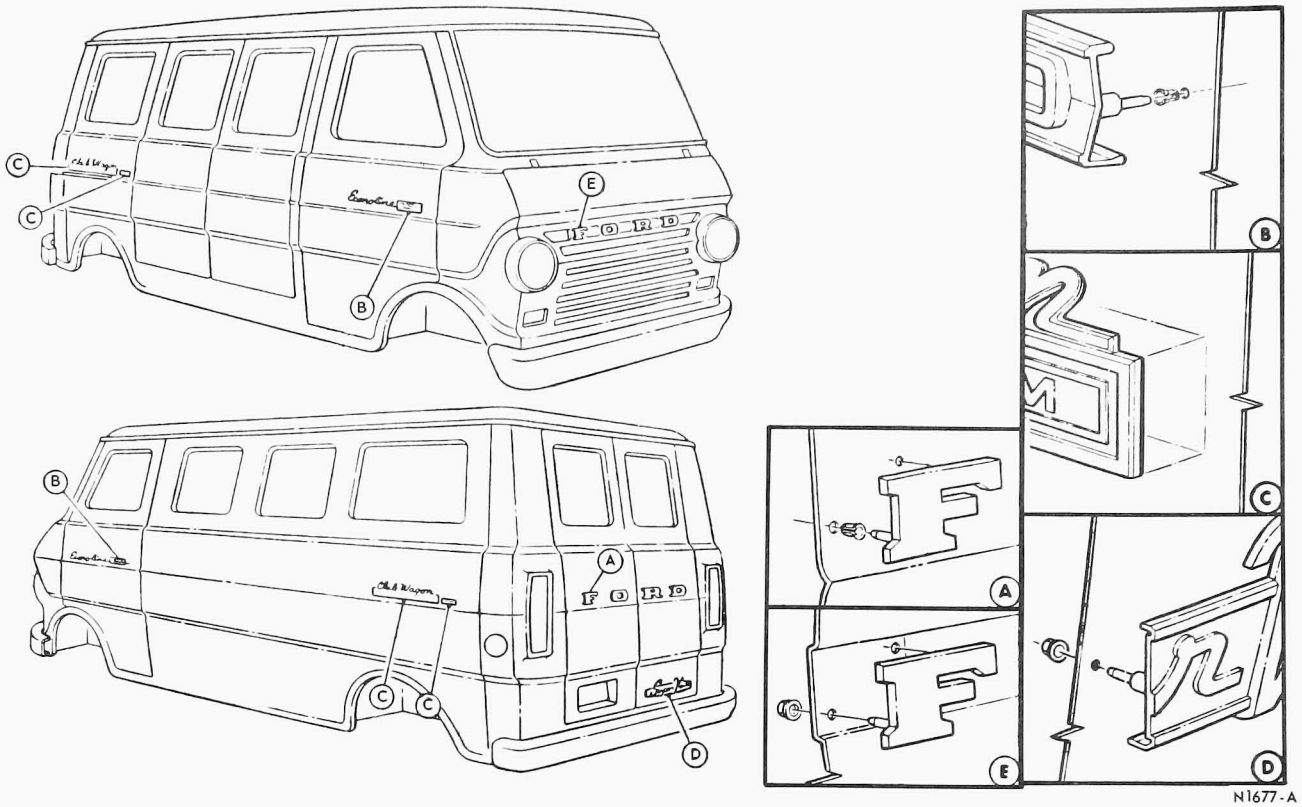

FIG. 6 Econoline Exterior Ornamentation

Mark Corp
January 73 365-127-73B Litho In U.S.A.

Ford

Ford Marketing Corporation
Ford Customer Service Division
Service Technical Communications Department

Ford

1973 TRUCK SHOP MANUAL

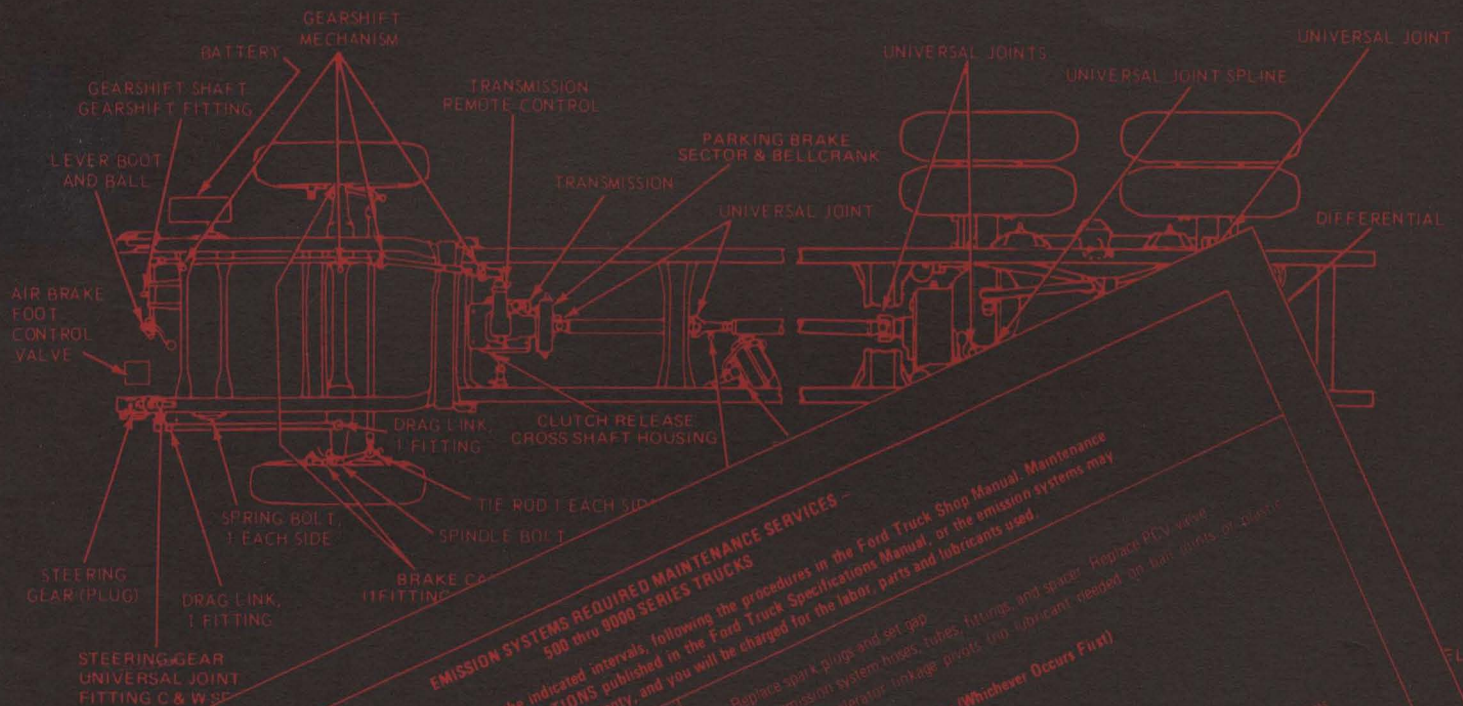

EMISSION SYSTEMS REQUIRED MAINTENANCE SERVICES
500 thru 9000 SERIES TRUCKS

The maintenance services must be performed at the indicated intervals, following the procedures in the Ford Truck Shop Manual, Maintenance Specifications Manual, or the emission systems may become inoperative. These services are not covered by the Warranty, and you will be charged for the labor, parts and lubricants used.

GASOLINE ENGINE MAINTENANCE SCHEDULE

Daily
Check dry type air cleaner restriction indicator, if so equipped, and clean element as required (1).

4,000 Miles or 4 Months (Whichever Occurs First)
Lubricate ... and clean and refill oil filter (2).
Clean and ... and check operation, if so equipped.

12,000 Miles or 12 Months (Whichever Occurs First)
Replace ... element if not equipped with restriction indicator (3).
... 401, 477, 534 C.I.D.
... leaks.
... equipped)
Torque ...
Inspect ... pressure of electric ... choke ...
Check ... and clean external choke ...
... speed and fuel mixture.
... ignition timing.
Replace if cracked or eroded.
... assembly and functioning of air cleaner intake ...
... wires for cuts, burns, ...
... correct ... loose terminal
Clean distributor cap, rotor and ...
Check for cutted ... system ...
temperature control system.
Check secondary ignition wires ...
abrasions or punctures.
Replace distributor breaker points and set gap.
and ground connection.
Clean ignition coil tower and check voltage output.

MEDIUM ... 5000

(1) ... (At first 6,000 miles only, thereafter ...
... miles only, thereafter every 5 ...
...chever Occurs First)
... (1). (At first 6,000 miles only, thereafter every 5 ...
... miles only, thereafter every 5 ...

EMISSION SYSTEMS REQUIRED MAINTENANCE SERVICES
500 thru 9000 SERIES TRUCKS

The maintenance services must be performed at the indicated intervals, following the procedures in the Ford Truck Shop Manual, Maintenance Specifications Manual, or the emission systems may become inoperative. These services are not covered by the Warranty, and you will be charged for the labor, parts and lubricants used.

GASOLINE ENGINE MAINTENANCE SCHEDULE

Daily
Check dry type air cleaner restriction indicator, if so equipped, and clean element as required (1).

4,000 Miles or 4 Months (Whichever Occurs First)
Lubricate ... and clean and refill oil filter (2).
Clean and ... and check operation, if so equipped.

12,000 Miles or 12 Months (Whichever Occurs First)
Replace ... element if not equipped with restriction indicator (3).
... 401, 477, 534 C.I.D.
... leaks.
... equipped)
Torque ...
Inspect ... pressure of electric ... choke ...
Check ... and clean external choke ...
... speed and fuel mixture.
... ignition timing.
Replace if cracked or eroded.
... assembly and functioning of air cleaner intake ...
... wires for cuts, burns, ...
... correct ... loose terminal
Clean distributor cap, rotor and ...
Check for cutted ... system ...
temperature control system.
Check secondary ignition wires ...
abrasions or punctures.
Replace distributor breaker points and set gap.
and ground connection.
Clean ignition coil tower and check voltage output.

MEDIUM ... 5000

(1) ... (At first 6,000 miles only, thereafter ...
... miles only, thereafter every 5 ...
...chever Occurs First)
... (1). (At first 6,000 miles only, thereafter every 5 ...
... miles only, thereafter every 5 ...

Replace spark plugs and set gap.
Clean emission system hoses, tubes, fittings, and spacer. Replace PCV valve.
Lubricate accelerator linkage pivots (no lubricant needed on ball studs or plastic bushings).

Each 24,000 Miles or 24 Months (Whichever Occurs First)
Replace fuel filter element (3).
Replace distributor cap and rotor.
Check and adjust distributor spark advance.
Lubricate distributor shaft bushing (oil cup).

At 24,000 Miles and 36,000 Miles
Test engine compression, all cylinders. Repair any cylinder below specifications.

DIESEL ENGINE MAINTENANCE SCHEDULE
Also see diesel engine Manufacturers Service Policy or Operators Manual.

Daily
Check fuel lines for leaks. Repairs as required.
Check air cleaner restriction indicator (1).

12,000 Miles or 12 Months (Whichever Occurs First)
Check air inlet piping and tighten clamps. More frequent intervals may be required under off highway or dusty conditions.

(1) Clean when restriction indicator shows red. Replace element after four cleanings or two years, or if damaged. Gasoline and Diesel E-engines.
(2) More frequent intervals required in dusty areas, high speed and temperature operation, extended idling, or frequent short trips.
(3) More frequent intervals may be required under off highway or dusty conditions.

...A MAINTENANCE
... shift main or auxiliary transmission (5).
... and 15 speed transmissions (5)
... mounting bracket bolts.
... gear lever.
Drain, ... and refill ... (5).
Torque ... bolts.
Check 2-speed axle electrical ... (4).
Lubricate Tachometer Drive Assembly (4).
Check Air Inlet Piping (Ford V-8 Diesel).
Clean Frame mounted booster air cleaner (C Series with hydraulic brakes).
Check Air Inlet Filter - MGM shortstop brake chamber (6).
Clean or replace air filter.
Clean or replace speedometer, parking brake and tachometer cables.
Lubricate speedometer, parking brake and clutch pedal pivot and linkage.
Check brake and clutch pedal pivot and hub.
Lubricate release bearing and hub.

...months (Whichever Comes First)
... 600 4 x 4) (6).
... (7).
... plate bolts (4).

Volume 5
Pre-delivery, Maintenance & Lubrication

1973 TRUCK SHOP MANUAL

Volume V
Maintenance and Lubrication

Group Index

Vol. I	Identification Codes	10
	Wheels and Tires	11
	Brakes	12
	Steering	13
	Suspension	14
	Driving Axles and Drive Shafts	15
	Clutch and Manual Transmission	16
	Automatic Transmission	17
Vol. II	Vehicle Identification	20
	Gasoline Engines	21
	Diesel Engines	22
	Ignition System	23
	Fuel System—Gasoline	24
	Fuel System—Diesel	25
	Exhaust System	26
	Cooling System	27
	Starting System	28
Vol. III & IV	Identification Codes	30
	Charging System	31
	Lighting System	32
	Instruments, Clusters and Controls	33
	Main Wiring Harnesses and Circuit Protection	34
	Auxiliary Equipment	35
	Ventilating, Heating and Air Conditioning	36
	Seats	41
	Window Glass and Mechanisms	42
	Stationary Window Glass	43
	Doors, Hood & Tailgate	44
	Interior Trim	45
	Tops	46
	Body Shell, Exterior Trim, Frame & Underbody	47
Maintenance and Lubrication		**50**

Ford Marketing Corporation
Ford Customer Service Division
Service Technical Communications Department

First Printing—January, 1973

© Ford Marketing Corporation, Dearborn, Michigan

FOREWORD

HOW TO USE THIS MANUAL . . .

It's A Vehicle Identification Guide. Part 50-01 contains the vehicle identification codes and illustrates how these codes are used on the Rating Plate. These codes are used to identify the vehicle and its components.

It's A Pre-Delivery Guide and Maintenance Schedule. Part 50-02 covers the Pre-Delivery Sequence Guide and the Scheduled Maintenance Services. The Pre-Delivery Sequence Guide when followed in the order presented in this manual, is designed to save time, avoid unnecessary steps, and prevent the overlooking of any recommended check point. Scheduled Maintenance Services list the intervals at which the services are to be performed. Also included is a chart of Non-Scheduled Maintenance items to be performed as required.

It's A Lubrication Guide. Part 50-03 is a guide to lubrication points on the 1973 Truck chassis. The specified lubricants are included in chart form, along with other pertinent information on oils and filters.

Part 50-04 provides information on vehicle jacking, towing and hoisting.

Parts 50-11 through 50-41 have detailed service information for items and components that are generally involved with periodic maintenance. **It is not a comprehensive repair manual.** For detailed information on all items, components and assemblies, refer to the appropriate volume and group of the 1973 Truck Shop Manual. An index is provided at the beginning of each part listing procedures covered and the page number.

The description and specifications in this manual were in effect at the time this manual was approved for printing. Ford Marketing Corporation reserves the right to discontinue models at any time, or change specifications or design, without notice and without incurring obligation.

Ford Service Publications

Maintenance and Lubrication

GROUP 50

PART 50-01	PAGE	PART 50-17	PAGE
Identification Codes	50-01-01	Automatic Transmissions	50-17-01
PART 50-02		PART 50-21	
Maintenance Schedules	50-02-01	Gasoline Engines	50-21-01
PART 50-03		PART 50-22	
Lubrication Charts and Lubricant Specifications	50-03-01	Diesel Engines	50-22-01
PART 50-04		PART 50-23	
Hoisting, Jacking and Towing	50-04-01	Ignition Systems	50-23-01
PART 50-11		PART 50-24	
Wheels and Tires	50-11-01	Fuel Systems – Gasoline	50-24-01
PART 50-12		PART 50-26	
Brakes	50-12-01	Exhaust Systems	50-26-01
PART 50-13		PART 50-27	
Steering	50-13-01	Cooling System	50-27-01
PART 50-14		PART 50-31	
Suspension	50-14-01	Charging System	50-31-01
PART 50-15		PART 50-32	
Driving Axles and Driveshaft	50-15-01	Lights, Instruments, Controls, Heating, Air Conditioning and Accessories	50-32-01
PART 50-16		PART 50-41	
Clutch and Manual Transmission	50-16-01	Body	50-41-01

FOR DIAGNOSIS AND SERVICE PROCEDURES ON EMISSION RELATED COMPONENTS, REFER TO VOLUME VI

PART 50-01 Identification Codes

GENERAL INFORMATION

VEHICLE CERTIFICATION LABEL

The Vehicle Certification Label (V.C. Label) is attached to the rear face of the driver's door. The upper half of the label contains the name of the manufacturer, the month and year of manufacture and the certification statement. The V.C. Label also contains the Vehicle Identification Number.

The remaining information codes on the V.C. Label are the same as the Truck Rating Plate Codes (Fig. 1). Vehicle codes shown on the Truck Rating Plate are explained in the following paragraphs.

RATING PLATE

Figure 1 illustrates a typical Truck Rating Plate. On light and medium cowl and windshield vehicles, the Rating Plate is mounted on the right side of the cowl top panel under the hood. On stripped Parcel Delivery vehicles, the rating plate is placed in an envelope and included in the boxed item parts. On Bronco models the plate is mounted on the inside panel of the glove compartment door. On all other vehicles, the Rating Plate is mounted on the rear face of the left front door.

VEHICLE IDENTIFICATION NUMBER

The identification number is the first

line of numbers and letters appearing on the Rating Plate (Fig. 1). The first letter and two numbers indicate the truck model and series (the letter prefix identifies the type of body or cab and the numbers are the first two numbers of a truck series). The letter following the truck series code designates the engine identification code. The letter following the engine identification code indicates the assembly plant at which the vehicle was built. The remaining numbers indicate the consecutive unit number. The charts in this part list the various vehicle identification number codes.

VEHICLE DATA

The Vehicle Data appears on the Rating Plate on the two lines following the identification number. The first three digits under W.B. designate the wheelbase in inches. The one or two letters under COLOR identify the exterior paint color (two letters designate a two-tone). The letter and three digits under MODEL designate the truck model within a series. The letter and numerals under BODY designate the interior trim and body type (the letter identifies the interior trim scheme and the numerals identify the body or cab type). The transmission installed in the vehicle is identified under TRANS by either a numeric or alphabetical code (if two symbols appear, the first identifies the auxiliary transmission, if so equipped, and the second symbol identifies the main transmission). A letter and a number or two numbers under AXLE identify the rear axle ratio (when required, a letter is also stamped behind the rear axle code to identify the front axle capacity). The maximum gross vehicle weight in pounds is stamped under MAX. G.V.W. A two-digit number is stamped under D.S.O. to identify the district which ordered the vehicle. If the vehicle is built to special order (Domestic Special Order, Foreign Special Order, Limited Production Option, or other special order), the complete order number will also appear under D.S.O. The charts in this part list the various vehicle data codes.

W.B. (WHEELBASE)

The wheelbase in inches is entered in this space.

MAX. G.V.W. LBS

The maximum gross vehicle weight in pounds is recorded in this space.

D.S.O.

If vehicle is built on a D.S.O., F.S.O., L.P.O. (special orders), the complete order number will be reflected under the D.S.O. space including the District Code Number.

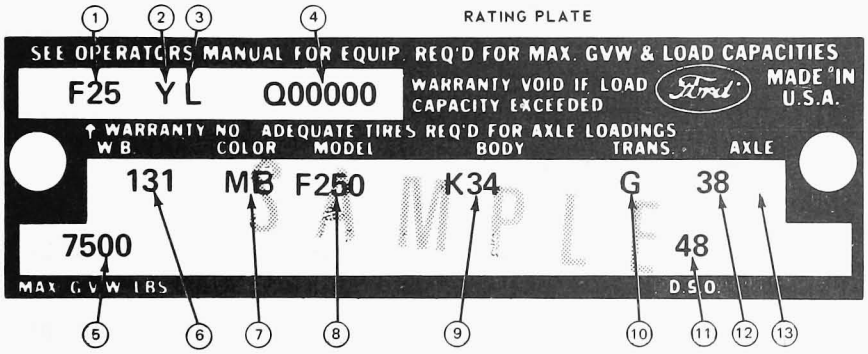



VEHICLE CERTIFICATION LABEL

1. TRUCK SERIES CODE
2. ENGINE CODE
3. ASSEMBLY PLANT CODE
4. CONSECUTIVE UNIT NO.
5. RECOMMENDED MAX. GROSS VEHICLE WEIGHT
6. WHEELBASE
7. EXTERIOR PAINT CODES
8. MODEL CODE
9. BRONCO, ECONOLINE AND 100-6000 – TRIM CODE; 700-9000 SERIES – FIRST CHARACTER IS CAB TRIM, SECOND IS SEAT TYPE, AND THIRD IS BODY CODE
10. TRANSMISSION CODES
11. DISTRICT/SPECIAL ORDER CODES
12. REAR AXLE CODES
13. FRONT AXLE CODES (IF SO EQUIPPED)

W1017-F

FIG. 1 Typical Truck Rating Plate and Vehicle Certification Label

MODEL DESIGNATION (FIRST 3 CODE SYMBOLS – WARRANTY SERIAL NO. LINE)

U	Bronco	
	Basic Series	
U-14	U-100 (Pickup) 4 x 4	
U-15	U-100 (Wagon) 4 x 4	
E	Econoline	
	Basic Series	
	100 Series	
E-11	E-100 Club Wagon	
E-12	E-100 Custom Club Wagon	
E-13	E-100 Chateau Wagon	
E-14	E-100 Regular Van	
E-15	E-100 Window Van	
E-16	E-100 Display Van	
	200 Series	
E-21	E-200 Club Wagon	
E-22	E-200 Custom Club Wagon	
E-23	E-200 Chateau Wagon	
E-24	E-200 Regular Van	
E-25	E-200 Window Van	
E-26	E-200 Display Van	
	Bus Models	
E-27	E-200 Standard	
E-28	E-200 Custom	
E-29	E-200 Chateau	
E-30	Camper	
	300 Series	
E-31	E-300 Club Wagon	
E-32	E-300 Custom Club Wagon	
E-33	E-300 Chateau Wagon	
E-34	E-300 Regular Van	
E-35	E-300 Window Van	
E-36	E-300 Display Van	
	Bus Models	
E-37	E-300 Standard	
E-38	E-300 Custom	
E-39	Chateau	
V-80	LTS 800	(Gas)
V-90	LTS 900	

F		Conventional	(Gas)
K		Conventional	(Diesel)
	Chassis		
Pick-up	Cab	Basic Series	
F-10	F-17	F-100	
F-11	F-18	F-100 4 x 4	
F-25	F-27	F-250	
F-26	F-28	F-250 4-x 4	
F-35	F-37	F-350	
F-50		F-500	
F-60		F-600	
F-61		F-600	
F-65, F-66		F-600 4 x 4	
K-60		F-6000	(Diesel)
K-61		F-6000	(Diesel)
K-70		F-7000	(Diesel)
B		Bus	(Gas)
J		Bus	(Diesel)
B-50		B-500	
B-60		B-600	
B-61		B-600	
B-70		B-700	
B-75		B-750	
J-70		B-7000	(Diesel)
P		Parcel	(Gas)
G		Parcel	(Diesel)
P-35		P-350	
P-40		P-400	
P-50		P-500	
P-60		P-600	(DSO)
G-50		P-5000 (DSO)	(Diesel)
		Motor Home	(Gas)
M-35		M-350	(DSO)
M-40		M-400	(DSO)
M-50		M-500	(DSO)
Y-80		LTS 8000	(Diesel)
Y-90		LTS 9000	

F-70	F-700	
F-75	F-750	
F-80	L-800	
F-81	L-800	
F-90	L-900	
K-80	L-8000	(Diesel)
K-81	L-8000	
K-90	L-9000	
N-60	LN-600	
N-61	LN-600	
N-70	LN-700	(Gas)
N-75	LN-750	
N-80	LN-800	
N-90	LN-900	
R-60	LN-6000	
R-61	LN-6000	
R-70	LN-7000	(Diesel)
R-80	LN-8000	
R-81	LN-8000	
R-90	LN-9000	
S-80	LNT-800	
S-90	LNT-900	(Gas)
W-90	LNT-8000	
W-90	LNT-9000	(Diesel)
C-60	C-600	
C-61	C-600	
C-70	C-700	(Gas)
C-75, C-76	C-750	
C-80	C-800	
C-90	C-900	
D-60	C-6000	
D-70	C-7000	(Diesel)
D-80	C-8000	
T-80	LT-800	
T-90	LT-900	(Gas)
U-80	LT-8000	
U-90	LT-9000	(Diesel)
L-80	CT-800	
L-90	CT-900	(Gas)
Q-80	CT-8000	(Diesel)
Z-90	W-9000	
X-90	WT-9000	(Diesel)

CW1168-B

ENGINE CODES BRONCO-ECONO-CLUB WAGONS-PARCEL-SCHOOL BUS-LT & MED TRUCKS		
Code	CID Engine	Cyl.
Gas (Bronco)		
T	200-1V	6
G	302-2V	8
Gas (Econoline)		
A	240-1V	6
G	302-2V	8
Gas (F100-250-350)		
A	240-1V	6
B	300-1V	6
G	302-2V	8
Y	360-2V	8
H	390-2V	8
Gas		
B	300-1V	6
B (600 Series)	300-1V H.D.	6
C	330-2V	8
D	330-2V H.D.	8
E	361-2V	8
Diesel		
U	522 (V 150)	8
W	380	6
Gas (Parcel Delivery)		
A	240-1V	6
B	300-1V	6
Diesel (Detroit)		
K	353N	3 (DSO)
Gas (Low Compression Export)		
1	240-1V	6
2	300-1V H.D.	6
3	302-2V	8
4	330-2V H.D.	8
8	360-2V	8
5	361-2V	8

Heavy and Extra Heavy Truck-Series 700 through 9000 LN 500-9000 and C-500-900			
Code	Cylinders	Engine C.I.D.	
A	6	240-1V	
B	6	300-1V	
C	8	330-2V M.D.	
D	8	330-2V H.D.	Gas

Heavy and Extra Heavy Truck-Series 700 Through 9000 LN-500-9000 and C-500-900			
Code	Cylinders	Engine C.I.D.	
E	8	361-2V	
F	8	391-4V	
H	8	401-4V	
K	8	477-4V	Gas
L	8	534-4V	
U	8	330-2V H.D.	Liquid Propane
W	8	361-2V	
9	8	534-4V	Gas (DSO)
X	8	391-4V	
1	6	240-1V	
3	8	330-2V M.D.	Gas Low
4	8	330-2V H.D.	Compression
5	8	361-2V	
B		903 Cummins-V903	
C		636 Caterpillar-V8-225	
D		855 Cummins NTC-270	
E		903 Cummins-V903-270	
F		855 Cummins-NHCT-270	
G		903 Cummins V903-290	
J		855 Cummins-NHC-250	
K		855 Cummins-NHCT-270	
L		855 Cummins-NHCT-270	
M		855 Cummins-NTC-260	
N		855 Cummins NTC-280	
P		855 Cummins-NTC-300	
Q		855 Cummins-NTC-320	
R		855 Cummins-NTC-335	Diesel
T		568 Detroit 8V-71N	
U		522 Caterpillar V8-150	
V		522 Caterpillar V8-175	
W		855 Cummins-NTC-290	
X		927 Cummins-N927	
Y		927 Cummins-N927	
Z		927 Cummins-N927	
1		855 Cummins-NH-230	
2		426 Detroit 6-71N	
3		638 Caterpillar 1674	
4		573 Caterpillar-V8-200	
5		855 Cummins NHCT-270	
6		568 Detroit 8V-71N	
7		568 Detroit 8V-71NE	
8		318 Detroit 6V-53N	
9		555 Cummins V-8	
0		855 Cummins NTC-350	

CONSECUTIVE UNIT SERIAL NUMBERS

1972 CALENDAR YEAR PRODUCTION

Month	Through 600 Series	Heavy-Extra Heavy Series
August	Q00,000–Q09,999	Q10,000–Q19,999
September	Q20,000–Q29,999	Q30,000–Q39,999
October	Q40,000–Q49,999	Q50,000–Q59,999
November	Q60,000–Q69,999	Q70,000–Q79,999
December	Q80,000–Q89,999	Q90,000–Q99,999

1973 CALENDAR YEAR PRODUCTION

Month	Through 600 Series	Heavy-Extra Heavy Series
January	R00,000–R09,999	R10,000–R19,999
February	R20,000–R29,999	R30,000–R39,999
March	R40,000–R49,999	R50,000–R59,999
April	R60,000–R69,999	R70,000–R79,999
May	R80,000–R89,999	R90,999–R99,999
June	S00,000–S09,999	S10,000–S19,999
July	S20,000–S29,999	S30,000–S39,999

ASSEMBLY PLANTS CODE LETTERS	
Code	Assembly Plant
C	Ontario Truck
E	Mahwah
I	Highland Park
K	Kansas City
L	Michigan Truck

ASSEMBLY PLANTS CODE LETTERS	
Code	Assembly Plant
N	Norfolk
P	Twin Cities
R	San Jose
S	Allen Park
V	Kentucky Truck

AUXILIARY TRANSMISSION CODE

CODE	DESCRIPTION	CODE	DESCRIPTION
2	Spicer 5831D	5	Spicer 8341C
3	Spicer 7231B	6	Spicer 8031C
4	Spicer 7231D	8	Spicer 7041

Heavy and Extra Heavy Truck – Series 700 through 9000 LN500-9000 and C-500-900

EXTERIOR PAINT COLOR CODES

Code	Color	M-30J/M-32J Spec. No.
A	Black	1724-A
B	Lt. Blue	3429-A
C	Spec. White	1525-A
D	Lt. Yellow	3439-A
E	Med. Blue Met.	5087-HS
F	Lt. Green	5058-A
G	Chrome Yellow	1526-A
H	Med. Beige	3569-A
H	Med. Green Met.	5187-HS
J	Rangoon Red	1515-A
K	Med. Ivy Green	3150-A
L	Dk. Green	1237-A
M	White	1619-A
N	Platinum	921-A
P	Med. Green Met.	3462-HS
Q	Lt. Green	5060-A
R	Lt. Aqua	3066-A
R	Ginger Met.	5186-HS
S	Brt. Dk. Blue Met.	5094-HS
T	Red	2008-A
U	Med. Lime Met.	5021-HS
V	Dk. Green	5005-A
W	Lt. Ginger Met.	3516-HS
X	Lt. Goldenrod	3565-A
Z	Lt. Copper Met.	5035-HS
2	Maroon	3059-A
4	Brt. Lime	5027-A
6	Brt. Med. Blue	5004-A
7	Med. Blue	2098-A
8	Yellow	3341-A
9	Prime Red	M6J102-B
	Prime Gray	M6J103-B

CLUB WAGON INTERIOR TRIM CODES

13, 14, 15	Lt. Gray/Black Vinyl
23, 24, 25	Lt. Blue/Med. Blue Vinyl or Cloth and Vinyl
33, 34, 35	Lt. Ginger/Med. Ginger Vinyl or Cloth and Vinyl
43, 44, 45	Lt. Green/Med. Green Vinyl or Cloth and Vinyl

ECONOLINE INTERIOR TRIM CODES

1, 11, 12	Lt. Gray/Black Vinyl
2, 21, 22	Lt. Blue/Med. Blue Vinyl
3, 31, 32	Lt. Ginger/Med. Ginger Vinyl
4, 41, 42	Lt. Green/Med. Green Vinyl
26, 27, 28	Lt. Blue/Med. Blue Vinyl
36, 37, 38	Lt. Ginger/Med. Ginger Vinyl
46, 47, 48	Lt. Green/Med. Green Vinyl
B, B1	Lt. Blue/Med. Blue Vinyl
C, C1, C2	Lt. Ginger/Med. Ginger Vinyl
D, D1, D3	Lt. Green/Med. Green Vinyl

LIGHT AND MEDIUM TRUCK TRIM CODES

4, 4B, 43, DB, M3, MB	Black Vinyl
D, M	Black Cloth and Vinyl
2, 23, B, K3	Lt. Blue/Med. Blue Vinyl
23	Med. Blue Cloth and Vinyl
KB, SB, 2B, 2C, BB	Black with Blue Vinyl
5, 53, E, N3	Red/Dk. Red Vinyl
N, V	Dk. Red Cloth and Vinyl
5B, 5C, EB, NB, VB	Black with Red Vinyl
6, 63, F, 03	Lt. Green/Med. Green Vinyl
O, W	Med. Green Cloth and Vinyl
6B, 6C, FB, OB, WB	Black with Green Vinyl
3, 33, C, L3	Pastel Ginger Vinyl
L, T	Light and Pastel Ginger Cloth and Vinyl
3B, 3C, CB, LB, TB	Black with Ginger Vinyl

BRONCO INTERIOR TRIM CODES

3, 34	Pastel Parchment Vinyl

HEAVY TRUCK TRIM CODES

4, D, D3, DC, 43, 4C, 4A, 4B, 41, 42, D2, DB, 46, D6, 4F, DF	Black Vinyl
B2	Lt. and Med. Blue Vinyl
E2	Red and Dk. Red Vinyl
F2	Lt. Green/Med. Green Vinyl
C2	Pastel Ginger Vinyl
BB	Black with Blue Vinyl
EB	Black with Red Vinyl
FB	Black with Green Vinyl
CB	Black with Ginger Vinyl
11	Med. Gray Vinyl
11	Lt. Gray Vinyl
12, A2	Lt. and Med. Gray Vinyl
13, 1C, A3, AC, 14, 1D, A4, AD, 15, 1E, A5, AE	Med. Gray Vinyl
A2	Gray Multicolor and Lt. Gray Vinyl
G4, G5, G7, GD, GE, GG	Ginger (Saddle) Vinyl

RATING PLATE "BODY" TYPE CODE
ECONOLINE-VANS & CLUB WAGONS

CUSTOM	STANDARD	CAB/TRIM
A	1	GRAY/BLACK
B	2	BLUE
C	3	GINGER
D	4	GREEN

VAN SEATS
1 STATIONARY PASSENGER
2 FLIP PASSENGER
6 DELUXE DRIVER
7 DELUXE DRIVER & DELUXE STATIONARY PASSENGER
8 DELUXE DRIVER & FLIP PASSENGER

WAGON SEATS
3 FIRST & SECOND ROW - 5 PASSENGER
4 FIRST, SECOND & THIRD ROW - 8 PASSENGER
5 FIRST, SECOND, THIRD & FOURTH ROW - 12 PASSENGER

LIGHT & MEDIUM TRUCK – 100 Thru 6000 and Bronco

CUSTOM	RANGER	RANGER XLT	STD.	COLOR CAB/TRIM
	B	K	2	BLUE
	C	L	3	GINGER
	D	M	4	BLACK
	E	N	5	RED
	F	W	6	GREEN
	G	P	–	AVOCADO

H.D. VINYL	BRONCO REAR SEAT	STD.	SEATS
B	–	2	BENCH SEAT
C	–	3	FOAM CUSHION
–	4		BRONCO REAR SEAT

BODY TYPE	
0	PARCEL
3	FLARESIDE PICK-UP
4	STYLESIDE PICK-UP
5	PLATFORM STAKE
7	COWL
8	CHASSIS CAB
9	PLATFORM

Seat Codes – Medium and Heavy Truck				
HD Black Vinyl	Driver w/Companion	Single Driver	Full Width	Description
A	–	–	1	Bench Seat
B	–	–	2	Custom Bench Seat
–	C	3	–	L-S Unison
–	D	4	–	L-S No. 675
–	E	5	–	Bostrom Westcoaster
–	F	6	–	Bostrom T-Bar
–	G ①	7	–	National Cush-N-Aire
–	H	8	–	Bostrom Level Air

① w/Lear Siegler companion seat.

FRONT AXLE CODES
LIGHT AND MEDIUM TRUCKS

CODE			
Manual	Power		
	A	3,800	
	B	4,700	
–	J	5,000	Ford
2	K	5,500	
3	L	6,000	
4	M	7,000	
7	P	3,500	DANA 6CF HD
8	Q	3,000	DANA 44 LOCK

Medium & Heavy Trucks (Except F-B-500-600, 6000)					
CODE			CODE		
Manual	Power	Description	Manual	Power	Description
1	J	5000 lb.	7	P	12,000 lb.
2	K	5500 lb.	8	–	12,000 lb. Steer-Ease
3	L	6000 lb.	9	R	15,000 lb.
4	M	7000 lb.	–	S	16,000 lb.
5	N	9000 lb.	–	T	18,000 lb.
6	–	12,000 lb Center Point	–	U	20,000 lb.
			–	Z	DSO Front Axle

DISTRICE CODES

11	BOSTON	42	CLEVELAND	72	SAN JOSE
12	BUFFALO	43	MILWAUKEE	73	SALT LAKE CITY
13	NEW YORK	46	INDIANAPOLIS	74	SEATTLE
14	PITTSBURGH	47	CINCINNATI	75	PHOENIX
15	NEWARK	48	DETROIT	76	DENVER
16	PHILADELPHIA	52	DALLAS	83	GOVERNMENT
17	WASHINGTON	53	KANSAS CITY	84	HOME OFFICE RESERVE
21	ATLANTA	54	OMAHA	85	AMERICAN RED CROSS
22	CHARLOTTE	55	ST. LOUIS	89	TRANSPORTATION SERVICES
23	MEMPHIS	56	DAVENPORT	87	BODY COMPANY
24	JACKSONVILLE	57	HOUSTON	90's	EXPORT
28	LOUISVILLE	58	TWIN CITIES		
41	CHICAGO	71	LOS ANGELES		

FORD OF CANADA

MERCURY REGIONS	FORD REGIONS
A1 CENTRAL	B1 CENTRAL
A2 EASTERN	B2 EASTERN
A3 ATLANTIC	B3 ATLANTIC
A4 MIDWESTERN	B4 MIDWESTERN
A6 WESTERN	B6 WESTERN
A7 PACIFIC	B7 PACIFIC
I2 EXPORT	I2 EXPORT

NOTE: EXPORT ALPHABETICAL I

TANDEM REAR AXLE CODES

Code	Description	Capacity	Ratio	Code	Description	Capacity	Ratio	Code	Description	Capacity	Ratio
AJ	Eaton 38DSC	(38,000)	4.56	ER	Eaton 38DPC	(38,000)	6.65	B9	Rockwell SLHD	(34,000)	7.80
BJ	Eaton 38DSC	(38,000)	4.88	FR	Eaton 38DPC	(38,000)	7.60	DA	Rockwell SQHD	(38,000)	6.17
CJ	Eaton 38DSC	(38,000)	5.57	AV	Eaton 42DPB	(44,000)	7.60	D1	Rockwell SQHD	(38,000)	4.11
FJ	Eaton 38DSC	(38,000)	4.11	CV	Eaton 42DPB	(44,000)	5.05	D2	Rockwell SQHD	(38,000)	4.44
GJ	Eaton 38DSC	(38,000)	4.33	DV	Eaton 42DPB	(44,000)	5.91	D3	Rockwell SQHD	(38,000)	4.63
HJ	Eaton 38DSC	(38,000)	5.29	BA	Rockwell SLHD	(34,000)	3.55	D4	Rockwell SQHD	(38,000)	5.29
DJ	Eaton 38DSE		6.14	BB	Rockwell SLHD	(34,000)	8.60	D5	Rockwell SQHD	(38,000)	5.83
EJ	Eaton 38DSE		6.50	B1	Rockwell SLHD	(34,000)	4.11	D6	Rockwell SQHD	(38,000)	6.83
JJ	Eaton 38DSE	(38,000)	7.17	B2	Rockwell SLHD	(34,000)	4.44	D7	Rockwell SQHD	(38,000)	7.80
KJ	Eaton 38DSE	(38,000)	7.60	B3	Rockwell SLHD	(34,000)	4.63	D8	Rockwell SQHD	(38,000)	4.88
DN	Eaton 34DPC	(34,000)	6.21	B4	Rockwell SLHD	(34,000)	4.88	AX	Eaton 50DP	(50,000)	5.61
FN	Eaton 34DPC	(34,000)	7.60	B6	Rockwell SLHD	(34,000)	5.83	AV	Eaton 42DPB	(44,000)	7.60
AR	Eaton 38DPC	(38,000)	5.05	B7	Rockwell SLHD	(34,000)	6.17	CV	Eaton 42DPB	(44,000)	5.05
DR	Eaton 38DPC	(38,000)	6.22	B8	Rockwell SLHD	(34,000)	6.83	DV	Eaton 42DPB	(44,000)	5.91

FORD TRUCK SERIES DISIGNATIONS

Prefix	Series Numbers	Series	Prefix	Series Numbers	Series
U	100	Bronco	LNT	800 and 900	93.3" BBC Conventional Tandem-Gas
R	100 thru 300	Econoline Van	LNT	8000 and 9000	93.3" BBC Conventional Tandem-Diesel
F	100 thru 750	Conventional-Gas	C	500 thru 900	Tilt Cab-Gas
F	6000 and 7000	Conventional-Diesel	C	6000 thru 8000	Tilt Cab-Diesel
L	800 and 900	Conventional-Gas	CT	800 and 900	Tilt Cab Tandem-Gas
L	8000 and 9000	Conventional-Diesel	*CT	8000	Tilt Cab Tandem-Diesel
LT	800 and 900	Conventional Tandem-Gas	W	9000	Hi-Tilt Tractor-Diesel
LT	8000 and 9000	Conventional Tandem-Diesel	WT	9000	Hi-Tilt Tractor-Diesel
LTS	800 and 900	46" BA Conventional Tandem-Gas	B	500 thru 600	School Bus Chassis-Gas
LTS	8000 and 9000	46" BA Conventional Tandem-Diesel	P	350 thru 500	Parcel Delivery-Gas
LN	500 thru 750	95.3" BBC Conventional-Gas	*P	600	Parcel Delivery-Gas
LN	800 and 900	93.3" BBC Conventional-Gas	P	3500 thru 500	Parcel Delivery-Diesel
LN	6000 and 7000	95.3" BBC Conventional-Diesel	M	350 thru 500	Motor Home Chassis-Gas
LN	8000 and 9000	93.3" BBC Conventional-Diesel			

*Special Order

MODEL CODES AND GROSS VEHICLE WEIGHT RATING

Econoline – Club and Chateau Wagon

Club				Custom Club				Chateau			
Series	Code	Model	G.V.W.	Series	Code	Model	G.V.W.	Series	Code	Model	G.V.W.
E-100	E-110	5 Passenger	4,800	E-200	E-223	5 Passenger	5,500	E-200	E-232	8 Passenger	5,600
	E-111	5 Passenger	4,900		E-222	8 Passenger	5,600		E-233	5 Passenger	5,500
E-200	E-210	5 Passenger	5,200		E-224	8 Passenger	5,700		E-234	5 Passenger	5,700
	E-213	5 Passenger	5,500		E-226	8 Passenger	6,000		E-235	8 Passenger	6,000
	E-211	8 Passenger	5,300		E-225	5 Passenger	6,000		E-236	8 Passenger	6,000
	E-214	8 Passenger	5,700	E-300	E-321	5 Passenger	6,800	E-300	E-331	5 Passenger	6,800
	E-212	5 Passenger	5,400		E-324	8 Passenger	6,800		E-334	8 Passenger	6,800
	E-212	8 Passenger	5,600		E-325	12 Passenger	6,800		E-335	12 Passenger	6,800
	E-216	8 Passenger	6,000		E-323	5 Passenger	7,600		E-333	5 Passenger	7,600
	E-215	5 Passenger	6,000		E-322	8 Passenger	7,500		E-332	8 Passenger	7,500
E-300	E-310	5 Passenger	6,500		E-326	12 Passenger	7,600		E-336	12 Passenger	7,600
	E-311	5 Passenger	6,800		E-327	12 Passenger	7,800		E-337	8 Passenger	7,800
	E-310	8 Passenger	6,500								
	E-314	8 Passenger	6,800								
	E-315	12 Passenger	6,800								
	E-313	5 Passenger	7,600								
	E-312	8 Passenger	7,500								
	E-316	12 Passenger	7,600								
	E-317	8 Passenger	7,800								

Bronco

Series	Code	Model	G.V.W.	Series	Code	Model	G.V.W.
	U-140	Pickup	4,300		U-150	Wagon	4,300
	U-141	Pickup	4,500		U-151	Wagon	4,500
	U-142	Pickup	4,900		U-152	Wagon	4,900

ECONOLINE MODEL CODES – VAN

Series	Code	Model	G.V.W.
E-100	E-140	Van	4,325
	E-141	Van	4,600
	E-142	Van	4,800
	E-150	Window	4,325
	E-151	Window	4,600
	E-152	Window	4,800
	E-160	Display	4,325
	E-161	Display	4,600
	E-162	Display	4,800
E-200	E-240	Van	5,250
	E-241	Van	5,450
	E-242	Van	6,000
	E-250	Window	5,250
	E-251	Window	5,450
	E-252	Window	6,000
	E-260	Display	5,250
	E-261	Display	5,450
	E-262	Display	6,000
E-300	E-340	Van	6,050
	E-341	Van	6,200
	E-342	Van	6,800
	E-343	Van	7,000
	E-344	Van	7,500
	E-345	Van	7,700
	E-346	Van	8,300

Series	Code	Model	G.V.W.
E-300 (Contd.)	E-347	Van	7,500
	E-348	Van	7,700
	E-350	Window	6,050
	E-351	Window	6,200
	E-352	Window	6,800
	E-353	Window	7,000
	E-354	Window	7,500
	E-355	Window	7,700
	E-356	Window	8,300
	E-357	Window	7,500
	E-358	Window	7,700
	E-360	Display	6,050
	E-361	Display	6,200
	E-362	Display	6,800
	E-363	Display	7,000
	E-364	Display	7,500
	E-365	Display	7,700
	E-366	Display	8,300
	E-367	Display	7,500
	E-368	Display	7,700
	E-300	Cutaway Camper	8,300
	E-371	Parcel Delivery	8,300
	E-372	Parcel Delivery	8,300
	E-381	Parcel Delivery	8,300
	E-382	Parcel Delivery	8,300

LIGHT & MEDIUM TRUCK MODEL CODES AND GROSS VEHICLE WEIGHT

Series	Pickups	Chassis Cab	GVW
F-100 - 4 x 2	F-100	F-170	4,550
	F-101	F-171	4,650
	F-102	F-172	4,800
	F-103	F-173	5,000
	F-104	F-174	5,450
	F-105	F-175	5,500
	F-106	F-176	5,500
F-100 - 4 x 4	F-110	F-180	5,200
	F-111	F-181	5,600
	F-112	F-182	5,200
	F-113	F-183	5,600
F-250 - 4 x 2	F-250	F-270	6,200
	F-251	F-271	6,900
	F-252	F-272	7,500
	F-253	F-273	8,100
	F-254	F-274	8,300

Series	Pickups	Chassis Cab	GVW
F-250 - 4 x 2	F-255	F-275	7,500
	F-256	F-276	8,100
F-250 - 4 x 4	F-260	F-280	6,500
	F-261	F-281	7,100
	F-262	F-282	7,700
	F-263	F-283	7,100
	F-264	F-284	7,700
F-350 4 x 2	F-350	F-370	6,600
	F-351	F-371	8,000
	F-352	F-372	8,300
	F-353	F-373	9,000
	F-354	F-374	10,000
	F-355	F-375	8,350
	F-356	F-376	9,500
	F-357	F-377	9,000
	F-358	F-378	9,500
	F-359	F-379	10,000

Series	Model Code	GVW
F-500	F-500	14,000
	F-501	16,000
	F-502	17,400
	F-503	19,200
F-600	F-600	16,000
	F-601	17,000
	F-602	19,000
	F-610	19,700
	F-611	20,200
	F-612	21,000
	F-613	22,000
	F-614	22,000
	F-615	23,000
	F-616	24,000
	F-617	22,000
	F-618	17,900
F-600 4 x 4	F-650	17,200
	F-660	21,000
	F-661	24,000
F-6000 - Diesel	K-600	16,000
	K-601	17,000
	K-602	19,200
	K-610	19,700

Series	Model Code	GVW
F-6000 - Diesel	K-611	20,200
	K-612	21,000
	K-613	22,000
	K-614	22,000
	K-615	23,000
	K-616	24,000
	K-617	22,000
B-500 - Bus	B-500	14,000
	B-501	16,000
	B-502	17,400
	B-503	19,200
B-600 - Bus	B-600	16,000
	B-601	17,000
	B-602	19,200
	B-610	19,700
	B-611	20,200
	B-612	21,000
	B-613	21,000
	B-614	22,000
	B-615	22,000
	B-616	23,000
	B-617	24,000
	B-618	17,900

Series	Model Code	GVW
P-350 - Parcel	P-350	8,000
	P-351	6,100
	P-352	6,500
	P-353	8,000
P-400 - Parcel	P-400	10,000
	P-401	7,400
	P-402	8,000
	P-403	7,000
P-500 - Parcel	P-500	15,000
	P-501	10,100
	P-502	15,000
	P-503	12,000
DSO P-600 - Parcel	P-600	17,000
	P-601	15,000
	P-602	15,000
	P-603	17,000
DSO P-5000 - Parcel Diesel	G-504	12,000
	G-506	15,000

DSO Motor Home		
M-500	M-502	12,000
	M-504	15,000
	M-505	12,800

CW1175-D

TRUCK SERIES CODE, MODEL CODE, RECOMMENDED GROSS VEHICLE WEIGHT
HEAVY AND EXTRA HEAVY TRUCK

SERIES	MODEL CODE	GVW (lbs.)
N-600	N-604	16,000
	N-605	19,200
	N-610	21,000
	N-611	22,000
	N-612	23,000
	N-615	24,000
	N-618	17,900
	N-619	20,200
	N-620	22,000
	N-621	22,000
C600	C-602	17,500
	C-611	22,000
	C-612	23,000
	C-616	20,200
	C-617	21,200
N-6000	R-602	16,000
	R-603	19,200
	R-610	21,000
	R-611	22,000
	R-612	23,000
	R-613	23,000
	R-615	24,000
	R-616	20,200
	R-617	22,000
	R-618	22,000
C-6000	D-602	17,500
	D-611	22,000
	D-612	23,000
	D-615	20,200
	D-616	21,200
F-7000	K-700	19,200
	K-701	21,000
	K-702	22,000
	K-703	23,000
	K-704	24,000
	K-705	24,000
	K-706	25,500
	K-707	27,500
	K-708	22,000
N-7000	R-700	22,000
	R-702	23,000
	R-703	24,000
	R-704	25,500
	R-707	27,500
	R-709	19,200
	R-710	21,000
	R-711	22,000
	R-712	24,000
C-7000	D-702	25,500
	D-705	27,500
	D-707	21,200
	D-708	23,000
F-700	F-700	19,200
	F-701	21,000
	F-702	22,000
	F-703	23,000
	F-704	24,000
	F-705	24,000
	F-706	25,500
	F-707	22,000

SERIES	MODEL CODE	GVW (lbs.)
N-700	N-703	24,000
	N-704	25,500
	N-709	19,200
	N-710	21,000
	N-711	22,000
	N-712	24,000
	N-752	23,000
	N-753	24,000
	N-754	25,500
	N-760	27,500
	N-762	21,500
	N-763	22,000
	N-764	22,000
	N-765	24,000
C-700	C-702	25,500
	C-706	21,200
	C-707	23,000
F-750	F-750	21,500
	F-751	22,200
	F-752	23,000
	F-753	24,000
	F-754	24,000
	F-755	25,500
	F-756	27,500
	F-757	21,500
	F-758	22,000
C-750	C-752	25,500
	C-755	27,500
	C-756	23,000
L-800	F-802	24,500
	F-803	25,500
	F-804	27,500
	F-805	29,000
	F-806	31,000
	F-808	34,000
	F-809	31,000
	F-810	22,100
	F-811	31,800
	F-812	22,100
	F-813	31,800
	F-814	34,000
LN-800	N-802	24,500
	N-803	25,500
	N-804	27,500
	N-805	29,000
	N-806	31,000
	N-808	34,000
	N-811	31,000
	N-812	22,100
	N-813	31,800
	N-814	22,100
	N-815	31,800
	N-816	34,000
C-800	C-802	27,500
	C-807	25,100
LT-800	T-800	37,000
	T-802	39,000
	T-804	43,000
	T-806	46,000
	T-807	50,000

SERIES	MODEL CODE	GVW (lbs.)
LT-800	T-811	41,000
	T-812	44,800
	T-880	39,000
	T-881	41,000
	T-882	43,000
	T-883	44,800
	T-884	46,000
	T-885	41,000
LTS-800	V-800	39,000
	V-804	46,000
	V-805	50,000
	V-809	41,000
	V-110	44,000
NT-800	S-800	37,000
	S-802	39,000
	S-804	43,000
	S-806	46,000
	S-807	50,000
	S-811	41,000
	S-812	44,800
	S-880	39,000
	S-881	41,000
	S-882	43,000
	S-883	44,800
	S-884	46,000
	S-885	41,000
CT-800	L-800	43,000
	L-802	39,000
	L-806	42,000
	L-807	46,000
	L-808	47,100
L-8000	K-802	25,500
	K-803	27,500
	K-805	31,000
	K-806	32,000
	K-807	34,000
	K-808	35,000
	K-809	31,000
	K-812	23,100
	K-813	31,800
N-8000	R-802	25,500
	R-803	27,500
	R-805	31,000
	R-806	32,000
	R-807	34,000
	R-808	35,000
	R-810	23,100
	R-811	31,800
C-8000	D-802	27,500
	D-806	25,100
	D-807	32,000
	D-808	35,000
LT-8000	U-800	39,000
	U-805	46,000
	U-806	50,000
	U-807	50,000
	U-808	54,000
	U-809	60,000
	U-815	41,000
	U-816	44,800
	U-817	61,000

CW1176-C

TRUCK SERIES CODE, MODEL CODE, RECOMMENDED GROSS VEHICLE WEIGHT
HEAVY AND EXTRA HEAVY TRUCK

SERIES	MODEL CODE	GVW (lbs.)
LTS-8000	Y-800	39,000
	Y-804	46,000
	Y-805	50,000
	Y-806	50,000
	Y-807	52,000
	Y-808	54,000
	Y-809	56,000
	Y-810	56,000
	Y-811	58,000
	Y-812	60,000
	Y-814	64,000
	Y-818	41,000
NT-8000	W-800	39,000
	W-805	46,000
	W-806	50,000
	W-807	50,000
	W-808	54,000
	W-812	41,000
	W-814	44,800
CT-8000	Q-800	43,000
	Q-802	39,000
	Q-803	45,000
	Q-805	41,000
	Q-807	46,000
	Q-808	47,100
L-900	F-900	25,500
	F-902	27,500
	F-905	31,000
	F-906	32,000
	F-907	33,000
	F-908	34,000
	F-909	35,000
	F-912	23,100
	F-913	31,800
	F-914	31,000
N-900	N-900	25,500
	N-902	27,500
	N-905	31,000
	N-906	32,000
	N-908	34,000
	N-909	35,000
	N-911	23,100
C-900	C-904	27,500
	C-906	31,000
	C-907	32,000
	C-910	34,000
	C-912	36,000
	C-913	31,000
	C-914	25,100
LT-900	T-900	39,000
	T-902	41,000
	T-904	43,000
	T-906	46,000
	T-907	50,000
	T-908	50,000
	T-909	54,000
LT-900	T-910	56,000
	T-911	60,000
	T-914	44,800
	T-915	48,000
	T-916	52,000
	T-917	58,000
LTS-900	V-900	39,000
	V-904	46,000
	V-905	50,000
	V-906	50,000
	V-907	52,000
	V-908	54,000
	V-909	56,000
	V-911	58,000
	V-912	60,000
	V-913	62,000
	V-914	64,000
	V-917	39,000
	V-918	41,000
	V-919	54,000
	V-920	48,000
NT-900	S-900	39,000
	S-902	41,000
	S-904	43,000
	S-906	46,000
	S-907	50,000
	S-909	54,000
	S-914	44,800
	S-915	48,000
	S-916	52,000
CT-900	L-900	39,000
	L-913	42,000
	L-914	46,000
	L-915	47,100
	L-916	50,000
	L-917	51,000
L-9000	K-902	32,000
	K-904	35,000
	K-907	28,000
	K-908	31,800
L-9000	R-902	32,000
	R-904	35,000
	R-906	28,000
	R-907	31,800
W-9000	Z-903	36,000
	Z-904	29,900
	Z-905	35,000
	Z-906	36,000
	Z-907	29,640
LT-9000	U-900	43,000
	U-903	46,000
	U-904	50,000
	U-905	50,000
	U-908	60,000
	U-911	52,000
LT-9000	U-911	52,000
	U-914	44,800
	U-915	61,000
	U-916	48,000
	U-917	58,000
LTS-9000	Y-900	43,000
	Y-903	50,000
	Y-904	50,000
	Y-905	52,000
	Y-906	54,000
	Y-907	56,000
	Y-908	56,000
	Y-909	58,000
	Y-910	60,000
	Y-911	62,000
	Y-918	70,000
	Y-919	48,000
NT-9000	W-903	46,000
	W-904	50,000
	W-906	54,000
	W-907	43,000
	W-911	44,800
	W-912	48,000
	W-913	52,000
WT-9000	X-905	44,800
	X-906	46,000
	X-907	46,000
	X-908	47,100
	X-909	44,600
	X-915	44,800
	X-916	46,000
	X-917	46,000
	X-918	47,100
	X-919	44,600
B-700	B-700	19,700
	B-701	21,000
	B-703	22,000
	B-704	23,000
	B-705	24,000
	B-706	24,000
	B-707	25,500
	B-708	22,000
B-7000	J-700	20,200
	J-701	22,000
	J-702	23,000
	J-703	24,000
	J-704	24,000
	J-705	25,500
	J-706	22,000
B-750	B-750	21,500
	B-751	22,000
	B-752	23,000
	B-753	24,000
	B-754	24,000
	B-755	25,500
	B-756	22,200

CW1177-C

REAR AXLE CODE (2780-lb. to 7400-lb. Capacity)

Code	Description	Ratio	Code	Description	Ratio	Code	Description	Ratio
A2	Ford 3300 ①	3.70	04	Ford 2780	4.57	24	Dana 60 (5300)	4.10
A3	Ford 2780 ①	4.11	05	Ford 3300	4.11	25	Dana 60 (5300)	4.56
A5	Ford 3300 ①	4.11	08	Ford 3300	3.50	27	Dana 70 (7400)	4.10
B4	Dana 60 ① (5200)	4.10	09	Ford 3300	3.70	28	Dana 70 (7400)	4.56
B8	Ford 2780 ①	3.50	10	Ford 3050	3.25	71	Dana 60 (5050)	3.54
B9	Ford 3300 ①	3.50	11	Ford 3050	3.50	72	Dana 60 (5050)	3.73
C7	Dana 60 ① (5300)	3.54	12	Ford 3050	3.70	73	Dana 60 (5050)	4.10
C8	Dana 60 ① (5300)	3.73	02	Ford 3300	3.00	36	Dana 70 (7400)	3.73
D7	Dana 70 ① (7400)	4.10	17	Ford 3300	3.25	37	Dana 60 (5300)	3.54
H2	Ford 3600 ①	3.50	18	Ford 2780	3.50	38	Dana 60 (5300)	3.73
H3	Ford 3600 ①	4.09	22	Dana 70 (7400)	4.88	G1	Dana 60 ① (5050)	3.54
03	Ford 2780	4.11	23	Dana 70 (7400)	5.13	G3	Dana 60 ① (5050)	4.10

① Limited-Slip or Traction-Lok

REAR AXLE CODE (11,000-lb to 18,500-lb. Capacity)

Code	Description	Capacity	Ratio	Code	Description	Capacity	Ratio	Code	Description	Capacity	Ratio
E1	Eaton 16244	(17,500)	5.57/7.75	FQ	Eaton 17121	(18,500)	6.14	42	Rockwell D-100	(13,000)	6.20
E2	Eaton 16244	(17,500)	6.17/8.58	GQ	Eaton 17121	(18,500)	6.50	44	Rockwell D-100	(13,000)	6.80
E3	Eaton 16244	(17,500)	6.50/9.04	HQ	Eaton 17121	(18,500)	7.17	52	Rockwell H-170	(17,500)	5.86
F1	Eaton 15201	(15,000)	5.14/7.17	JQ	Eaton 17121	(18,500)	7.60	53	Rockwell H-170	(17,500)	6.14
F2	Eaton 15201	(15,000)	5.83/8.12	32	Rockwell C-100		6.20	54	Rockwell H-170	(17,500)	6.83
F3	Eaton 15201	(15,000)	6.33/8.81	34	Rockwell C-100		6.80	55	Rockwell H-170	(17,500)	7.17
EH	Eaton 17221	(18,500)	5.57/7.60	31	Rockwell C-100		5.83	62	Rockwell F-106	(15,000)	6.20
FH	Eaton 17221	(18,500)	6.14/8.38	40	Rockwell D-100		5.29	64	Rockwell F-106	(15,000)	6.80
GH	Eaton 17221	(18,500)	6.50/8.87	41	Rockwell D-100	(13,000)	5.83	66	Rockwell F-106	(15,000)	7.20
HH	Eaton 17221	(18,500)	7.17/9.77								

REAR AXLE CODE (22,000-lb and 23,000-lb. Single-Axle)

Code	Description	Capacity	Ratio	Code	Description	Capacity	Ratio	Code	Description	Capacity	Ratio
DB	Eaton 18221	(22,000)	5.57/7.60	HG	Eaton 19121	(23,000)	4.56	H3	Rockwell R-171	(23,000)	4.63
EB	Eaton 18221	(22,000)	6.14/8.38	DK	Eaton 18121	(22,000)	6.50	H4	Rockwell R-171	(23,000)	4.88
FB	Eaton 18221	(22,000)	6.50/8.87	EK	Eaton 18121	(22,000)	7.17	H5	Rockwell R-171	(23,000)	5.29
GB	Eaton 18221	(22,000)	7.17/9.77	AP	Eaton 19221	(23,000)	4.33/5.90	H6	Rockwell R-171	(23,000)	5.86
AG	Eaton 19121	(23,000)	4.11	CP	Eaton 19221	(23,000)	5.43/7.39	H7	Rockwell R-171	(23,000)	6.14
BG	Eaton 19121	(23,000)	4.33	DP	Eaton 19221	(23,000)	6.17/8.40	H9	Rockwell R-171	(23,000)	3.70
CG	Eaton 19121	(23,000)	4.88	EP	Eaton 19221	(23,000)	6.67/9.08	1A	Rockwell R-170	(23,000)	6.42/8.38
DG	Eaton 19121	(23,000)	5.43	GP	Eaton 19221	(23,000)	4.11/5.60	2A	Rockwell R-170	(23,000)	7.09/9.07
EG	Eaton 19121	(23,000)	6.17	H1	Rockwell R-171	(23,000)	4.11	3A	Rockwell R-170	(23,000)	7.21
FG	Eaton 19121	(23,000)	6.67	H2	Rockwell R-171	(23,000)	4.33	4A	Rockwell R-170	(23,000)	4.11

TANDEM REAR AXLE CODES

Code	Description	Capacity	Ratio	Code	Description	Capacity	Ratio	Code	Description	Capacity	Ratio
EC	Eaton 30DSC	(32,000)	6.50	GF	Eaton 34DSE	(34,000)	6.14	HW	Eaton 34DET	(34,000)	7.17/9.77
FC	Eaton 30DSC	(32,000)	7.17	HF	Eaton 34DSE	(34,000)	6.50				
GC	Eaton 30DSC	(32,000)	7.60	MF	Eaton 34DSE	(34,000)	7.17				
JF	Eaton 34DSC	(34,000)	4.11	KF	Eaton 34DSE	(34,000)	7.60				
BF	Eaton 34DSC	(34,000)	4.33	LF	Eaton 34DSE	(34,000)	3.70				
CF	Eaton 34DSC	(34,000)	4.56	FW	Eaton 34DTE	(34,000)	6.1468.38				
DF	Eaton 34DSC	(34,000)	4.88	GW	Eaton 34DTE	(34,000)	6.50/8.87				

TRANSMISSION CODES

Code	Description
Bronco	
C	3 Speed Manual
Econoline—Club Wagon	
C	3 Speed Manual
G	Automatic (C4)
Light, Medium and Heavy Truck, Parcel Delivery and School Bus	
A	New Process 435 4 Speed
B	Spicer 8516
B	Spicer P8516 Overdrive
C	Ford-Manual 3 Speed
C	Fuller RT-610 10 Speed
D	Clark 387 V 5 Speed
E	Warner T-19G
E	Fuller 5 H74 5 Speed
F	Fuller 5HA74 5 Speed
F	Warner T-18 4 Speed
G	C-4 Automatic
G	Warner T-87G
H	Allison MT650
J	Fuller RTO 9513
J	FMX Automatic (Parcel)
K	Spicer 6453A 5 Speed
L	Allison AT540
M	Clark 285V 5 Speed
N	Spicer 6352 5 Speed
O	New Process 542FL 5 Speed

Code	Description
Light, Medium and Heavy Truck, Parcel Delivery and School Bus (Cont'd.)	
Ø	Fuller T-905B 5 Speed
P	Warner T-19 4 Speed
P	C-6 Automatic
Q	Spicer 5652 5 Speed
R	Spicer 8716
S	Spicer 5756-B 5 Speed
T	New Process 542 FO 5 Speed
T	Fuller TRO-9509 B 9 Speed
U	Spicer 6852G 5 Speed
V	Fuller RT-910
W	Spicer 5352B 5 Speed
X	Fuller T-905A 5 Speed
Y	Transmatic MT41-6 Speed
Z	Transmatic MT40-6 Speed
1	Spicer 8552A 5 Speed
1	Transmatic MT42-6 Speed
2	Clark 282V 5 Speed
3	Fuller RT-906
4	Clark 280 VO 5 Speed
5	Fuller RTO-910
6	Fuller RTO-915
7	Clark 385V 5 Speed
8	Allison MT640
9	Fuller RT-915
9	New Process 542 FD 5 Speed

CW1172-C

PART 50-02 Pre-Delivery and Maintenance Schedules

COMPONENT INDEX Applies to Models as Indicated	Bronco	Econoline	F-100 thru F-350	M-Series	P-Series	500-750 Series	5000-7000 Series	800-900 Series	8000-9000 Series
EMISSION SYSTEMS REQUIRED MAINTENANCE SERVICES	02-04	02-04	02-04	02-04	02-04	02-05	02-05	02-05	02-05
NON-SCHEDULED MAINTENANCE	02-09	02-09	02-09	02-09	02-09	02-10	02-10	02-10	02-10
VEHICLE MAINTENANCE SERVICES	02-06	02-06	02-06	02-06	02-06	02-07	02-07	02-08	02-08

A page number indicates that the item is for the vehicle(s) listed at the head of the column.

MAINTENANCE

The scheduled and non-scheduled maintenance recommendations are included in this part for your reference. The emission systems required maintenance services and the vehicle maintenance services are separated on each maintenance schedule. Be sure to perform all maintenance services by referring to both parts of the maintenance services schedule.

Any modification of the emission control systems is subject to the penalties of federal law if made prior to the first sale and registration, and is subject to penalties under the laws of some states, if made thereafter. Further, federal law prohibits vehicle manufacturers or dealers from knowlingly removing or rendering an emission control system inoperative after sale and delivery to an ultimate purchaser.

PRE-DELIVERY SERVICES

BRONCO, ECONOLINE, F-100/350 and P-SERIES TRUCKS

PERFORM THE FOLLOWING INSPECTIONS AND ADJUSTMENTS AT THE DEALERSHIP	ROAD TEST AND INSPECT FOR PROPER OPERATION
All fluid levels – engine oil, brake master cylinder, windshield washer reservoirs, automatic transmission (hot), manual transmission and axle, power steering (hot), and cooling system (test coolant protection).	Steering column ignition lock.
	Starting of engine in park and neutral.
	Horn, windshield wiper and washer, lights, signals and instruments.
Recharge battery to 1.230 specific gravity.	Brakes (Including parking brake and warning light).
Throttle operation and idle return.	Operation of heater/defroster/ventilation system, radio, speed control and all other optional equipment.
Adjust curb idle speed, fast idle and engine timing.	Steering control
Align headlights as necessary.	Engine performance and driveability, including automatic choke function.
Install wheel covers, cigar lighter, radio antenna, mirrors, and roof rack.	Transmission/clutch performance.
Adjust tire pressures to specifications.	Squeaks and rattles.
Underside of vehicle for fluid leaks, steering linkage, suspension and removal of clamps or brackets used in-transit.	**CLEAN-UP**
Exterior parts of vehicle for proper appearance, operation and fit.	Wash vehicle.
Keys and operation of all locks.	Detail clean up of exterior and interior of vehicle.
Interior trim and appointments for proper appearance and fit.	Exterior metal and paint finish.
	Touch up paint and polish surface blemishes as required.
Operation of windows and vents.	Check glove compartment for warranty facts booklet, emission systems warranty and maintenance schedules booklet, owner card and owner publications.
Operation of seats and seatback latches.	Be sure starting instruction sleeve is on driver's side sun visor.
Operation of sunroof/convertible top.	Remove seat and carpet protective covers.

CY1550-A

500 THRU 900 SERIES TRUCKS

PERFORM THE FOLLOWING INSPECTIONS

AND ADJUSTMENTS AT THE DEALERSHIP

UNDER HOOD
ALL FLUID LEVELS: Check and fill as required – engine oil, automatic transmission, power steering reservoir, brake and clutch master cylinders, windshield washer, oil bath air cleaner reservoir, check coolant level and test.
Recharge battery to 1.230 specific gravity.
Check and adjust initial ignition timing.
Check and adjust idle speed and governor speed on governor equipped engine.
Check lines, fittings, connections and components for leaks, including audible leaks in air brake system.
ON INSIDE
Check window and vent operation and fit.
Check inside locks and door operation.
Install cigar lighter.
Check glove compartment for warranty facts booklet, emission systems warranty and maintenance schedules booklet, ownercard and owner publications.
ON OUTSIDE
Check latches, keys and locks operation.
Hood and doors for alignment and operation.
Torque wheel nuts and adjust tire pressure.
Install radio antenna (if so equipped).
Remove factory shipping protective material (except under hood at hood flange).
Torque rear axle nuts on saddle mounted units.
Check and adjust front wheel toe-in.

ON OUTSIDE (Cont.)
Inspect for exterior metal and paint damage.
Headlight aim.
Torque axle shaft flange nuts.
ON HOIST
Check lines for fittings, connections and components for leaks.
Adjust rear brakes on saddle mount deliveries.
Visually check front and rear suspension and steering.
Check rear axle and transmission lube level.
ROAD TEST
Check seat and track operation.
Check part-neutral switch (automatic transmission).
Check parking brake operation.
Check – horn, windshield washer and wiper operation.
Check all instruments, lights, turn signals and hazard warning flasher operation.
Check 2-3 speed axle operation.
Check radio operation.
Check brake, clutch and accelerator pedal operation.
Check transmission shift operation.
Check steering control.
Check for squeaks and rattles.
Check engine operation.
Check throttle and idle return.
Check heater, defroster, air conditioner and vent system.
Remove seat and floor mat protective covers.

CY1551-A

BRONCO, ECONOLINE and CLUB WAGONS, F-100 thru -350, M- and P-SERIES with GASOLINE ENGINES

EMISSION SYSTEMS REQUIRED MAINTENANCE SERVICES

These maintenance services must be performed at the indicated intervals, following the procedures in the 1973 Ford Truck Shop Manual. Maintenance service adjustments MUST CONFORM TO SPECIFICATIONS published in the 1973 Ford Truck Specifications Manual, or the emissions systems may become inoperative. These services are not covered by the Warranty, and you will be charged for the labor, parts and lubricants used.

	MAINTENANCE INTERVALS TIME IN MONTHS, OR MILEAGE IN THOUSANDS, WHICHEVER OCCUR FIRST											
	4	8	12	16	20	24	28	32	36	40	44	48
Engine Oil ①	Change	Change	Change	Change	Change	Change	Change	Change	Change	Change	Change	Change
Engine Oil Filter ① ⑧	Replace		Replace		Replace		Replace		Replace		Replace	
TRS or Throttle Solenoid Fuse ②	Check	Check	Check	Check	Check	Check	Check	Check	Check	Check	Check	Check
Idle Fuel Mixture			Adjust			Adjust			Adjust			Adjust
Curb Idle Speed			Adjust			Adjust			Adjust			Adjust
Throttle Solenoid "Off" Speed			Adjust			Adjust			Adjust			Adjust
Intake Manifold Bolts (V-8 Engines)						Torque						Torque
Crankcase-Emission Filter in Air Cleaner ⑥		Replace		Replace		Replace		Replace		Replace		Replace
Carburetor Air Cleaner Element ⑥			Replace			Replace			Replace			Replace
Oil Bath Air Cleaner (if so equipped) ⑥		Clean & Refill		Clean & Refill		Clean & Refill		Clean & Refill		Clean & Refill		Clean & Refill
Exhaust Control Valve		Lubricate & Free-up		Lubricate & Free-up		Lubricate & Free-up		Lubricate & Free-up		Lubricate & Free-up		Lubricate & Free-up
Fuel Vapor Emission Control System ⑨												
• Fuel Tank Filler Cap ②			Inspect			Inspect			Inspect			Inspect
• Hoses and Vapor Lines ②			Inspect			Inspect			Inspect			Inspect
Crankcase Breather Cap ⑥			Clean			Clean			Clean			Clean
Spark Plugs ① ⑦			Replace			Replace			Replace			Replace
Initial Ignition Timing			Adjust			Adjust			Adjust			Adjust
Distributor Points			Inspect ②			Replace			Inspect ②			Replace
Spark Plugs Wires Resistance			Check			Check			Check			Check
Spark Control System ⑩												
• Vacuum Hoses			Inspect			Inspect			Inspect			Inspect
• Electrical Leads			Inspect			Inspect			Inspect			Inspect
• Advance & Retard, Cut-in Speed ②			Check			Check			Check			Check
• Thermal Switch ②			Check			Check			Check			Check
Spark Delay Valve ⑩			Replace			Replace			Replace			Replace
PCV Valve			Replace			Replace			Replace			Replace
PCV System Hoses & Tubes ②			Clean			Clean			Clean			Clean
Air Cleaner Temperature Control			Check			Check			Check			Check
Carburetor												
• Throttle & Choke Linkage ②			Check			Check			Check			Check
• External Choke Mechanism (P- & M-Series)			Clean & Check			Clean & Check			Clean & Check			Clean & Check
• Air Valve ②			Check			Check			Check			Check
• Throttle Solenoid ②			Check			Check			Check			Check
Fuel System Filter			Replace			Replace			Replace			Replace
Fuel Lines & Connection ②			Inspect			Inspect			Inspect			Inspect
EGR System (if so equipped) ③ ⑪ ②			Check			Check			Check			Check
Coolant Condition & Protection			Check ④			Replace ⑤			Check ④			Replace ⑤
Cooling System Hoses & Clamps			Check			Check			Check			Check
All Drive Belts ②			Check			Check			Check			Check
Distributor Cap & Rotor ②						Inspect						Inspect
Evaporative Emission Canister ② ⑨						Inspect						Inspect
Engine Compression ②						Check			Check			

Severe Service Operation

When operating your car under any of the following conditions, change engine oil every 2 months or 2,000 miles and oil filter every 4 months or 4,000 miles, check spark plug wires resistance, and clean and regap spark plugs every 4 months or 4,000 miles whichever comes first:

- Extended periods of idling or low-speed operation such as off-road or door-to-door delivery service.
- Towing trailers over 2,000 pounds gross loaded weight for long distances.
- Outside temperature remains below + 10° F. for 60 days or more and most trips are less than 10 miles.
- In severe dust conditions.

Adjust, repair or replace as required.

③ Clean exhaust passages in EGR valve, carburetor spacer, and intake manifold (V-8 engines).

④ If coolant is dirty or rusty in appearance, the system should be cleaned and flushed. The radiator cap should be cleaned and the system refilled with the prescribed solution of Ford Cooling System Fluid and water.

⑤ Drain and flush cooling system, and replace cooling system fluid – each 24 months regardless of mileage.

⑥ More often if operated in severe dust conditions.

⑦ Using 91 octane regular fuel (gasoline grade 2 under the preferred SAE rating system). When using leaded fuel (gasoline grade 3 or higher under the preferred SAE rating system) and extended periods of low speed operation, change spark plugs each 8,000 miles.

⑧ Change engine oil filter every 4,000 miles on trucks with dual rear wheels.

⑨ Bronco, Econoline E-100-200, Club Wagon, F-100 and all California vehicles built after January 1, 1973.

⑩ Bronco, Econoline E-100-200, Club Wagon, and F-100.

⑪ Bronco, Econoline E-100-200. Club Wagon, and F-100 and F-250-350 with 360-390 engines in California.

Emission System Abbreviations:

TRS – Transmission Regulated Spark Control System
PCV – Positive Crankcase Ventilation System
EGR – Exhaust Gas Recirculation System

CY1501A

F-500 thru -750 and B-, C-, L-, and W-SERIES and P-SERIES with DIESEL ENGINES

EMISSION SYSTEMS REQUIRED MAINTENANCE SERVICES

These maintenance services must be performed at the indicated intervals, following the procedures in the 1973 Ford Truck Shop Manual. Maintenance service adjustments MUST CONFORM TO SPECIFICATIONS published in the 1973 Ford Truck Specifications Manual, or the emissions systems may become inoperative. These services are not covered by the Warranty, and you will be charged for the labor, parts and lubricants used.

	MAINTENANCE INTERVALS DAILY, TIME IN MONTHS, OR MILEAGE IN THOUSANDS, WHICHEVER OCCURS FIRST												
	DAILY	4	8	12	16	20	24	28	32	36	40	44	48
Dry-type Air Cleaner													
• With restriction indicator ①⑤	Check												
• Without restriction indicator ③				Replace			Replace			Replace			Replace
Oil Bath Air Cleaner ⑤		Clean & Change	Clean & Change	Clean & Change	Clean & Change	Clean & Change	Clean & Change	Clean & Change	Clean & Change	Clean & Change	Clean & Change	Clean & Change	Clean & Change
Diesel Engines ⑦													
• Air cleaner restriction indicator ①	Check												
• Fuel lines and connection ④	Inspect												
• Air inlet piping and clamps ②				Check			Check			Check			Check
Engine Oil and Filter ②		Change	Change	Change	Change	Change	Change	Change	Change	Change	Change	Change	Change
Exhaust Control Valve ⑤		Lubricate & Free-up	Lubricate & Free-up	Lubricate & Free-up	Lubricate & Free-up	Lubricate & Free-up	Lubricate & Free-up	Lubricate & Free-up	Lubricate & Free-up	Lubricate & Free-up	Lubricate & Free-up	Lubricate & Free-up	Lubricate & Free-up
Valve Clearance 401, 477, 534 CID				Adjust			Adjust			Adjust			Adjust
Intake Manifold Bolts				Torque			Torque			Torque			Torque
Fuel Lines and Connections ④				Inspect			Inspect			Inspect			Inspect
Drain Fuel Filter Bowl (Super Duty Engines)	Each 12,000 Miles or 12 Months												
Electric Fuel Pump ④ ⑤				Check Pressure			Check Pressure			Check Pressure			Check Pressure
Carburetor													
• External Choke Linkage ④				Clean & Check			Clean & Check			Clean & Check			Clean & Check
• Accelerator and throttle ⑥ linkage				Lubricate			Lubricate			Lubricate			Lubricate
• Idle speed and fuel mixture ④				Check			Check			Check			Check
Spark Plugs				Replace			Replace			Replace			Replace
Distributor Points ⑧				Replace			Replace			Replace			Replace
Initial Ignition Timing				Adjust			Adjust			Adjust			Adjust
Distributor Cap and Rotor				Inspect ④			Replace			Inspect ④			Replace
Distributor Shaft Bushing (Oil Cup)							Lubricate						Lubricate
Spark Plug Wires Resistance ④				Check			Check			Check			Check
Ignition Coil													
• Connections				Clean			Clean			Clean			Clean
• Voltage Output ④				Check			Check			Check			Check
PCV Valve				Replace			Replace			Replace			Replace
PCV System Hoses, Tubes, Spacer and Fittings ④				Clean			Clean			Clean			Clean
Air Cleaner Temperature Control ④ ⑤				Check			Check			Check			Check
Clean, Inspect Hoses and Clamps and Refill Cooling System	Twice Annually												
Fuel Filter Element ③							Replace						Replace
Distributor Spark Advance							Adjust						Adjust
Engine Compression ④							Check			Check			

① Clean when restriction indicator shows red. Replace element after four cleanings or two years, or if damaged. Gasoline and diesel engines.

② More frequent intervals required in dusty areas, high speed and temperature operation, extended idling, or frequent short trips.

③ More frequent intervals may be required under off-highway or dusty conditions.

④ Adjust, repair or replace as required.

⑤ If so equipped.

⑥ No lubricant needed on ball joints or plastic bushings.

⑦ Also see diesel engine Manufacturers Service Policy or Operators Manual.

⑧ Check and correct for loose terminal and ground connection.

CY1504A

BRONCO, ECONOLINE, F-100-350, M & P SERIES

These services are not covered by Warranty, and you will be charged for the labor, parts and lubricants used.

	MAINTENANCE INTERVALS TIME IN MONTHS, OR MILEAGE IN THOUSANDS, WHICHEVER OCCURS FIRST											
	4	8	12	16	20	24	28	32	36	40	44	48
Front Axle Spindle Pins (P & M Series)	Lubricate Every 1,000 miles											
Steering Linkage (P & M Series)												
Spring Shackles and Pins (P & M Series)												
Parking Brake Linkage Pivots and Clevises (P & M Series)												
Front Axle Fluid Level (4 x 4) ① ② ③	Check	Check	Check	Check	Check	Check	Check	Check	Check	Check	Check	Check
Rear Axle Fluid Level ① ② ③ ⑨	Check	Check	Check	Check	Check	Check	Check	Check	Check	Check	Check	Check
Transfer Case Fluid Level (4 x 4) ① ③	Check	Check	Check	Check	Check	Check	Check	Check	Check	Check	Check	Check
Manual Transmission Fluid Level ① ④	Check	Check	Check	Check	Check	Check	Check	Check	Check	Check	Check	Check
Automatic Transmission Fluid Level ⑥	Check	Check	Check	Check	Check	Check	Check	Check	Check	Check	Check	Check
Brake Master Cylinder Fluid Level	Check	Check	Check	Check	Check	Check	Check	Check	Check	Check	Check	Check
Power Steering Fluid Level	Check	Check	Check	Check	Check	Check	Check	Check	Check	Check	Check	Check
Frame Mounted Brake Booster Oil Level (P-500)	Check	Check	Check	Check	Check	Check	Check	Check	Check	Check	Check	Check
Exhaust System	Check	Check	Check	Check	Check	Check	Check	Check	Check	Check	Check	Check
Front Axle Spindle Pins (4 x 2)	Lubricate	Lubricate	Lubricate	Lubricate	Lubricate	Lubricate	Lubricate	Lubricate	Lubricate	Lubricate	Lubricate	Lubricate
Steering Column U-Joints (4 x 4) (where required)	Lubricate	Lubricate	Lubricate	Lubricate	Lubricate	Lubricate	Lubricate	Lubricate	Lubricate	Lubricate	Lubricate	Lubricate
Steering Linkage	Lubricate	Lubricate	Lubricate	Lubricate	Lubricate	Lubricate	Lubricate	Lubricate	Lubricate	Lubricate	Lubricate	Lubricate
All Lock Cylinders	Lubricate	Lubricate	Lubricate	Lubricate	Lubricate	Lubricate	Lubricate	Lubricate	Lubricate	Lubricate	Lubricate	Lubricate
Hood Hinges, Hood Latch and Aux. Catch	Lubricate	Lubricate	Lubricate	Lubricate	Lubricate	Lubricate	Lubricate	Lubricate	Lubricate	Lubricate	Lubricate	Lubricate
Parking Brake Linkage, Pivots and Clevises	Lubricate	Lubricate	Lubricate	Lubricate	Lubricate	Lubricate	Lubricate	Lubricate	Lubricate	Lubricate	Lubricate	Lubricate
Universal Joint & Slip Yoke w/Zerk Fitting ① ④	Lubricate	Lubricate	Lubricate	Lubricate	Lubricate	Lubricate	Lubricate	Lubricate	Lubricate	Lubricate	Lubricate	Lubricate
Clutch Pedal Free Play (3/4" minimum)	Adjust	Adjust	Adjust	Adjust	Adjust	Adjust	Adjust	Adjust	Adjust	Adjust	Adjust	Adjust
Body Drain Holes	Clean	Clean	Clean	Clean	Clean	Clean	Clean	Clean	Clean	Clean	Clean	Clean
Automatic Transmission Bands	Adjust			Adjust			Adjust			Adjust		
Disc Brake Linings, Piston Boots & Pivot Pins		Inspect		Inspect		Inspect		Inspect		Inspect		Inspect
Wheels and Tires ⑤		Rotate		Rotate		Rotate		Rotate		Rotate		Rotate
Front Wheel Free-Running/Stan. Hubs(4x4)			Clean & Repack			Clean & Repack			Clean & Repack			Clean & Repack
Manual Transmission (except 3-speed light and medium duty Ford) ⑧						Drain & Refill						Drain & Refill
Front and Rear Axle – Dana ③	Check	Check	Check	Check	Check	Drain & Refill	Check	Check	Check	Check		Drain & Refill
Transfer Case ③						Drain & Refill						Drain & Refill
Front Wheel Bearings ④ ⑦						Repack & Adjust						Repack & Adjust
Rear Wheel Bearings (Dana Axle) ④ ⑦						Repack & Adjust						Repack & Adjust
Parking Brake & Speedometer Cables						Lubricate						Lubricate
Distributor Bushing						Lubricate						Lubricate
Drum Brake Linings and Lines ⑥						Inspect						Inspect

① Each 1,000 miles in off-highway operation.

② To check the axle lubricant the plug should be backed out slowly. If seepage occurs around the threads, the specified amount of lubricant is present and the plugs should be turned back immediately to avoid any drainage.

③ Drain and refill daily when operating in water.

④ Perform daily when operating in water. Include repacking the free-running hub bearing is so equipped.

⑤ Rotate only wheels with tires of same size and ply rating every 8,000 miles.

⑥ More frequent intervals may be required under adverse operating conditions.

⑦ Replace front and rear wheel seals whenever a hub assembly is removed.

⑧ Drain all transmissions daily if level indicates entrance of water.

⑨ Change rear axle lube in Dana rear axles every 4,000 miles if towing a class II or III trailer.

CY1502-A

MEDIUM 500•700-6000-7000 SERIES TRUCKS

These services are not covered by the Warranty, and you will be charged for the labor, parts and lubricants used.

	MAINTENANCE INTERVALS TIME IN MONTHS, OR MILEAGE IN THOUSANDS, WHICHEVER OCCURS FIRST							
	6	12	18	24	30	36	42	48
Hood Latch	Check & Lubricate	Check & Lubricate	Check & Lubricate	Check & Lubricate	Check & Lubricate	Check & Lubricate	Check & Lubricate	Check & Lubricate
Manual Steering Gear Lubricant Level	Check	Check	Check	Check	Check	Check	Check	Check
Brake and C-Series Clutch Master Cylinder Fluid Level	Check	Check	Check	Check	Check	Check	Check	Check
Power Steering Pump Fluid Level	Check	Check	Check	Check	Check	Check	Check	Check
Air Compressor Filter (clean if necessary)	Check	Check	Check	Check	Check	Check	Check	Check
Manual Transmission Fluid Level (2) (9)	Check	Check	Check	Check	Check	Check	Check	Check
Transfer Case Fluid Level	Check	Check	Check	Check	Check	Check	Check	Check
Rear Axle Fluid Level (9)	Check	Check	Check	Check	Check	Check	Check	Check
Air Compressor Mounting Bolts	Torque	Torque	Torque	Torque	Torque	Torque	Torque	Torque
Front and Rear Spring "U" Bolts (10)	Twice within first 500 miles and first 1,000 miles. In severe service each 6,000 miles thereafter.							
Rear Axle – Drain and Refill (1)	At first 6,000 miles and every 6 months or 36,000 miles thereafter.							
Front Axle–Drain and Refill (Not Req'd for C6) (F-600 4x4)								
Automatic Transmission Fluid	Drain & Refill	Drain & Refill	Drain & Refill	Drain & Refill	Drain & Refill	Drain & Refill	Drain & Refill	Drain & Refill
Manual Shift Main or Auxiliary Transmission (5)		Drain & Refill		Drain & Refill		Drain & Refill		Drain & Refill
5 & 10-Speed Manual Transmission (5)								
Transmission Remote Shift Rod Bearings, Front Linkage Cross Shaft Tube and Crank (C-Series)	Lubricate	Lubricate	Lubricate	Lubricate	Lubricate	Lubricate	Lubricate	Lubricate
Transfer Case (F-600 4 x 4) (7)				Drain & Refill				Drain & Refill
All Lock Cylinders	Lubricate	Lubricate	Lubricate	Lubricate	Lubricate	Lubricate	Lubricate	Lubricate
Front Axle Spindle Pins (3)	Lubricate	Lubricate	Lubricate	Lubricate	Lubricate	Lubricate	Lubricate	Lubricate
Steering Linkage – Where required	Lubricate	Lubricate	Lubricate	Lubricate	Lubricate	Lubricate	Lubricate	Lubricate
Clutch and Parking Brake Linkage, Pivots and Clevises	Lubricate	Lubricate	Lubricate	Lubricate	Lubricate	Lubricate	Lubricate	Lubricate
Front and Rear Spring Shackles and Pins (3)	Lubricate	Lubricate	Lubricate	Lubricate	Lubricate	Lubricate	Lubricate	Lubricate
Air Brake Foot Control Valve	Lubricate	Lubricate	Lubricate	Lubricate	Lubricate	Lubricate	Lubricate	Lubricate
Air Brake Foot Control Valve Treadle Hingle and Roller	Lubricate	Lubricate	Lubricate	Lubricate	Lubricate	Lubricate	Lubricate	Lubricate
Steering Column "U" Joints – where required	Lubricate	Lubricate	Lubricate	Lubricate	Lubricate	Lubricate	Lubricate	Lubricate
Transmission Control Linkage Pivots, Clevises and "U" Joints	Lubricate	Lubricate	Lubricate	Lubricate	Lubricate	Lubricate	Lubricate	Lubricate
Clutch Equalizer, Idler Lever and Cross Shafts	Lubricate	Lubricate	Lubricate	Lubricate	Lubricate	Lubricate	Lubricate	Lubricate
"U" Joints, Slip Yoke, Center Support Bearing w/Zerk Fitting	Lubricate	Lubricate	Lubricate	Lubricate	Lubricate	Lubricate	Lubricate	Lubricate
Oil Filter Element – 5 & 10-Speed Transmissions		Replace		Replace		Replace		Replace
Power Steering Pump Mounting Bracket Bolts		Torque		Torque		Torque		Torque
2-Speed Axle Electric Shift Unit Lubricant Level		Check		Check		Check		Check
Frame Mounted Booster Air Cleaner–C-Series w/Hyd. Brakes		Clean		Clean		Clean		Clean
Air Filter – MGM Short Stop Brake Chamber (6)		Clean or Replace		Clean or Replace		Clean or Replace		Clean or Replace
Speedometer, Parking Brake and Tachometer Cables		Lubricate		Lubricate		Lubricate		Lubricate
Brake and Clutch Pedal Pivot and Linkage		Lubricate		Lubricate		Lubricate		Lubricate
Clutch Release Bearing and Hub		Lubricate		Lubricate		Lubricate		Lubricate
Tachometer Drive Adapter (Ford V-8 Diesel)		Lubricate		Lubricate		Lubricate		Lubricate
Air Inlet Piping (Ford V-8 Diesel) (4)		Check		Check		Check		Check
Front Wheel Bearing (8)				Repack & Adjust				Repack & Adjust
Brake Lines and Linings (4)				Inspect				Inspect
Brake Backing Plate Bolts (4)				Torque				Torque
Radiator Shutter Assembly				Lubricate				Lubricate
Engine Mounting Bolts				Check				Check
V-8 Diesel Engine – Clean				Steam				Steam
Flat Type Brake Chamber Diaphragm – Replace	Each 50,000 miles or 1 year, whichever comes first							
Power Steering Filter – Replace								
R6 and R7 Relay Valves – Disassemble, Check and Clean								
Quick Release Valve – Disassemble, Check and Clean								
All Crossmember Bolts – Torque								
Front Spring Bracket to Frame Bolts – Torque								
Front and Rear Spring Clamp Bolts – Torque								
Fuel Tank to Frame Mounting Bolts – Torque								
Roto-Chamber Brake Chamber Diaphragm – Replace	Each 100,000 miles or 1 year, whichever comes first							
Master Cylinder Mounting Bolts – Torque (4)								
Transfer Case Linkage, Pivot Points, Clevis Pins and Parking Brake Bellcrank (F-600 4 x 4) (4)	Lubricate	Lubricate	Lubricate	Lubricate	Lubricate	Lubricate	Lubricate	Lubricate

(1) Refill Rockwell axles with SAE 140

(2) Replace each 500 miles in off-highway operation.

(3) Each 500 miles off-highway.

(4) More frequent intervals may be required under adverse conditions.

(5) Change each 8,000 miles in off-highway operation.

(6) Each 1,000 miles in off-highway operation

(7) Daily if operating in water or if level indicates entrance of water.

(8) Replace front and rear wheel seals whenever a hub assembly is removed.

(9) Clean breather and magnetic plug, if equipped when checking fluid level.

(10) Torque check and tighten.

These services are not covered by the Warranty, and you will be charged for the labor, parts and lubricants used.

HEAVY DUTY 800-900-8000-9000 TRUCKS	MAINTENANCE INTERVALS TIME IN MONTHS, OR MILEAGE IN THOUSANDS, WHICHEVER OCCURS FIRST							
	6	12	18	24	30	36	42	48
Hood Latch	Check & Lubricate	Check & Lubricate	Check & Lubricate	Check & Lubricate	Check & Lubricate	Check & Lubricate	Check & Lubricate	Check & Lubricate
Manual Steering Gear Lubricant Level	Check	Check	Check	Check	Check	Check	Check	Check
Brake Master Cylinder Fluid Level	Check	Check	Check	Check	Check	Check	Check	Check
Power Steering Pump Fluid Level	Check	Check	Check	Check	Check	Check	Check	Check
Air Compressor Filter (clean if necessary)	Check	Check	Check	Check	Check	Check	Check	Check
Manual Transmission Fluid Level (2) (9)	Check	Check	Check	Check	Check	Check	Check	Check
Cab Lift Pump Fluid Level - W Series	Check	Check	Check	Check	Check	Check	Check	Check
Rear Axle Fluid Level (9)	Check	Check	Check	Check	Check	Check	Check	Check
Air compressor Mounting Bolts	Torque	Torque	Torque	Torque	Torque	Torque	Torque	Torque
Front and Rear Spring "U" Bolts (10)	Twice within first 500 miles and first 1,000 miles in service - each 6,000 miles thereafter.							
Rear Axle – Drain and Refill (1)	At first 6,000 miles only, thereafter every 6 months or 36,000 miles							
Steering Shaft Slip Spline – W Series	Lubricate	Lubricate	Lubricate	Lubricate	Lubricate	Lubricate	Lubricate	Lubricate
Automatic Transmission Fluid	Drain & Refill	Drain & Refill	Drain & Refill	Drain & Refill	Drain & Refill	Drain & Refill	Drain & Refill	Drain & Refill
Manual Shift Main or Auxiliary Transmission (5)		Drain & Refill		Drain & Refill		Drain & Refill		Drain & Refill
5, 10, 13 and 16-Speed Manual Transmission (5)								
Transmission Remote Shift Rod Bearings, Front Linkage Cross Shaft Tube and Crank (C-Series)	Lubricate	Lubricate	Lubricate	Lubricate	Lubricate	Lubricate	Lubricate	Lubricate
Locking Cams (C, W Series), Lock Handle Linkage (C Series)	Lubricate	Lubricate	Lubricate	Lubricate	Lubricate	Lubricate	Lubricate	Lubricate
All Lock Cylinders	Lubricate	Lubricate	Lubricate	Lubricate	Lubricate	Lubricate	Lubricate	Lubricate
Front Axle Spindle Pins (3)	Lubricate	Lubricate	Lubricate	Lubricate	Lubricate	Lubricate	Lubricate	Lubricate
Steering Linkage – where required	Lubricate	Lubricate	Lubricate	Lubricate	Lubricate	Lubricate	Lubricate	Lubricate
Clutch and Parking Brake Linkage, Pivots and Clevises	Lubricate	Lubricate	Lubricate	Lubricate	Lubricate	Lubricate	Lubricate	Lubricate
Front and Rear Spring Shackles and Pins (3)	Lubricate	Lubricate	Lubricate	Lubricate	Lubricate	Lubricate	Lubricate	Lubricate
Air Brake Foot Control Valve	Lubricate	Lubricate	Lubricate	Lubricate	Lubricate	Lubricate	Lubricate	Lubricate
Air Brake Foot Control Valve Treadle Hinge and Roller	Lubricate	Lubricate	Lubricate	Lubricate	Lubricate	Lubricateq	Lubricate	Lubricate
Steering Column "U" Joints – where required	Lubricate	Lubricate	Lubricate	Lubricate	Lubricate	Lubricate	Lubricate	Lubricate
Transmission Control Linkage Pivots, Clevises and "U" Joints	Lubricate	Lubricate	Lubricate	Lubricate	Lubricate	Lubricate	Lubricate	Lubricate
Tandem Axle Air Shift Motor Vents	Clean	Clean	Clean	Clean	Clean	Clean	Clean	Clean
Tandem Axle Air Shift Motor Fluid Level	Check	Check	Check	Check	Check	Check	Check	Check
Clutch Equalizer	Lubricate	Lubricate	Lubricate	Lubricate	Lubricate	Lubricate	Lubricate	Lubricate
"U" Joints, Slip Yoke, Center Support Bearing w/Zerk Fitting	Lubricate	Lubricate	Lubricate	Lubricate	Lubricate	Lubricate	Lubricate	Lubricate
Oil Filter Element – 5,10,13,16-Speed Transmissions		Replace		Replace		Replace		Replace
Power Steering Pump Mounting Bracket Bolts		Torque		Torque		Torque		Torque
2-Speed Axle Electric Shift Unit Lubricant Level		Check		Check		Check		Check
Frame Mounted Booster Air Cleaner-C Series w/Hyd. Brakes		Clean		Clean		Clean		Clean
Air Filter–MGM Short Stop and Stopgard Spring Brakes, on Highway (6)				Clean or Replace				Clean or Replace
Speedometer, Parking Brake and Tachometer Cables		Lubricate		Lubricate		Lubricate		Lubricate
Brake and Clutch Pedal Pivot and Linkage		Lubricate		Lubricate		Lubricate		Lubricate
Clutch Release Bearing and Hub		Lubricate		Lubricate		Lubricate		Lubricate
90° Angle Drive Speedometer and Tachometer Drive		Lubricate		Lubricate		Lubricate		Lubricate
Front Wheel Bearing (8)				Repack & Adj.				Repack & Adj.
Brake Lines and Linings (4)				Inspect				Inspect
Brake Backing Plate Bolts (4)				Torque				Torque
Radiator Shutter Assembly				Lubricate				Lubricate
Engine Mounting Bolts				Check				Check
Ford V-8 Diesel Engine – Clean				Steam				Steam
Flat Type Brake Chamber Diaphragm – Replace Power Steering Filter – Replace R6 and R7 Relay Valves – Disassemble, Check and Clean Quick Release Valve – Dissasemble, Check and Clean All Crossmember Bolts – Torque Front and Rear Spring Bracket to Frame Bolts – Torque Front and Rear Spring Clamp Bolts – Torque Fuel Tank to Frame Mounting Bolts – Torque	Each 50,000 miles or 1 year, whichever comes first.							
Roto-Chamber Brake Chamber Diaphragm – Replace Master Cylinder Mounting Bolts – Torque (4)	Each 100,000 miles or 1 year, whichever comes first							
Air Stack Support Mounting Bolts and Clamps	Torque	Torque	Torque	Torque	Torque	Torque	Torque	Torque
Hendrickson Suspension Bronze Bushings (if equipped)	Lubricate	Lubricate	Lubricate	Lubricate	Lubricate	Lubricate	Lubricate	Lubricate
Fuller Transmission Air Filter		Replace		Replace		Replace		Replace
Trans. Remote Gearshift Levers, aux. Arm, Side Bushing (C Series)	Lubricate	Lubricate	Lubricate	Lubricate	Lubricate	Lubricate	Lubricate	Lubricate
Fuel Filter Bowl (Super Duty Engines)		Drain		Drain		Drain		Drain
Diesel Engine Spin-on Water Filter (7)		Replace		Replace		Replace		Replace
Spicer 16-Speed Transmission Air Filter				Replace				Replace
Rear Suspension Bracket to Frame Bolts				Torque				Torque
Shackle Bracket Bolts				Torque				Torque
Engine Oil Cooler (Super Duty Engines)								Clean
DV2 Drain Valve – Disassemble, Check, Clean and Lubricate MGM "Low Profile" Brake Chamber – Clean or Replace (11) Spicer 16-Speed Transmission Air Cylinder Pivot, Shift Lever-Lub.	Each 50,000 miles or 1 year, whichever comes first							
Shock Absorber Bracket to Frame Bolts – Torque (4)	Each 100,000 miles or 1 year, whichever comes first							

(1) Refill Rockwell Axles with SAE 140.

(2) Replace each 500 miles in off-highway operation.

(3) Each 500 miles off-highway.

(4) More frequent intervals may be required under adverse conditions.

(5) Change each 8,000 miles in off-highway operation.

(6) Each 12,000 miles in off-highway operation.

(7) Refer to respective manufacturers engine operators manual.

(8) Replace front and rear wheel seals whenever a hub assembly is removed.

(9) Clean breather and magnetic plug, if equipped, when checking fluid level.

(10) Torque check and tighten.

(11) Each 24,000 miles in off-highway operation.

BRONCO, ECONOLINE, F-100-350, M- and P-SERIES

NON-SCHEDULED MAINTENANCE

The following maintenance operations are not required at definite mileage or time intervals, but should be performed when needed. These services are not covered by the warranty. You will be charged for the labor, parts and lubricants used.

MAINTENANCE OPERATION	WHEN PERFORMED
• Clean body/door drain holes.	• At least twice annually.
• Check clutch master cylinder fluid level (M- and P-Series).	• Sluggish clutch action or gear clashing when shifting.
• Check battery and recharge if the specific gravity falls below 1.230.	• Starter turns engine more slowly than usual. Headlights brighten when engine speeded up from idle.
• Check connections for tightness and corrosion.	• Light beam appears too high or too low while running with normal vehicle load.
• Check headlamp alignment.	• Pedal travel is more than half the distance between the released position and the floor.
• Adjust Service Brakes (M-500, P-500).	• Parking brake does not hold the truck stationary on a reasonable grade.
• Adjust parking brake.	• Starter will not engage with transmission selector in park and/or neutral, or back-up light does not operate.
• Adjust Automatic Transmission neutral switch.	• Doors bind during opening or closing, or noisy operation.
• Lubricate door hinges, tracks and checks.	• Poor handling characteristics and/or abnormal tire wear are experienced.
• Check front wheel toe and tire and wheel balance.	• Loose steering, slack in steering system, shimmy.
• Adjust steering gear preload, steering linkage or front wheel bearings. Check suspension and frame for loose attachments.	• Within 500 miles of either new vehicle delivery or any removal of wheel.
• Check wheel nut torque.	• Abnormal accelerator pressure is required to downshift transmission.
• Lubricate automatic transmission kickdown linkage. (F-100-350 (4 x 2), P- and M-Series – 6 cylinder only.)	• Linkage action is sluggish.
• Lubricate clutch linkage and standard transmission linkage. To avoid attracting dust and grit to the lube points, do not over-lubricate.	• Accelerator action is sluggish.
• Lubricate accelerator linkage lightly with the specified lubricant.	• Wiper blades do not clean windshield after windshield and blades have been cleaned.
• Replace windshield wiper blades.	• While the vehicle is hoisted for lubrication.
• Check the spring leaves for being evenly stacked and the spring clips or "U-bolts" for being tight.	• When front wheel alignment is checked.
• Check steering stop adjustment (M- and P-Series).	• When hard shifting in encountered.
• Check and adjust transmission controls and shift operation.	• When hard steering is encountered.
• Check steering gear lubricant level (4 x 4).	• Poor handling characteristics and/or abnormal tire wear are experienced.
• Inspect tires and check tire pressures.	• Driving conditions or inspection indicates looseness.
• Torque check frame mounted fuel tank strap bolts.	• At frequent intervals when operating off-highway or if front wheel shimmy is experienced.
• Remove excessive mud build-up from wheels, undercarriage, and steering linkage (4 x 4).	• If washers do not spray fluid when operated.
• Check windshield washer fluid level – add fluid if required.	• If tailgate binds during opening/closing or noisy operation.
• Lubricate tailgate hinges.	• As required.
• Check alternator output.	• As required.
• Check voltage regulator.	• As required.
• Check operation of lights, turn signals, horn, windshield wipers and washer, instruments, vent system, heater and accessories.	• At engine start-up.
• Check brake warning light operation.	• As required.
• Check operation of clutch.	• As required/at each fuel stop.
• Check engine oil level.	• Within 500 miles of either new vehicle delivery or any change of wheel.
• Check wheel nut torque.	

CY1503-A

F-500-700 B-, C-, L- and W-SERIES

NON-SCHEDULED MAINTENANCE

The following maintenance operations are not required at definite mileage or time intervals, but should be performed on an "as required" basis. Have your authorized dealer check these items when your truck's performance indicates the necessity.

MAINTENANCE OPERATION	WHEN PERFORMED
BODY	
• Clean Body/door drain holes.	• Improper water drainage is suspected.
• Replace windshield wiper elements. If washing the blades and the windshield with a cleanser does not restore a clean wipe.	• Blades do not clean glass.
• Lubricate door hinges, checks and hood hinges.	• High effort required to swing door or hood and audible squeaks.
ELECTRICAL	
• Check headlight alignment.	• Light beams in wrong position when operating loaded.
• Check windshield washer fluid level.	• Governed by weather conditions.
CHASSIS (b)	
• Adjust brakes – All.	• Insufficient power shown in loaded practice stop.
• Check operation of brakes, clutch and steering (e).	• Vehicle handling qualities not up to par.
• Check steering stop adjustment.	• Front wheels rub on undercarriage or sheet metal when turning.
• Adjust manual steering gear preload (all trucks) and change steering gear lubricant (a) (c).	• If excessive steering effort is experienced when operating at sustained extreme low ambient temperatures (d).
• Check front end alignment.	• Poor steering, wandering or excessive tire wear.
• Check parking brake adjustment.	• Will not hold on a reasonable grade.
• Check exhaust system for leaks and looseness – Correct.	• When system becomes noisy, is damaged or shows evidence of leaks.
• Check transmission and engine mountings.	• Hard shifting or excessive vibration.
• Check clutch and hydraulic brake master cylinders fluid level and brake pedal travel.	• Excessive pedal travel or spongy feet.
• Check wedge brake running clearance.	• Excessive pedal travel or slow brake action.
• Check wheel mounting nut torque	• Twice within first 500 miles and at first 1,000 miles.
• Inspect tires and check air pressure.	• Varies with operation.
• Balance wheels and tires.	• Vibration indicates unbalance.
• Rotate wheels and tires and torque lug nuts.	• Periodically to correct uneven tire wear and to prevent loose wheel lug nuts.
TRANSMISSION AND REAR AXLE	
• Check and adjust clutch pedal travel	• Insufficient free travel or hard shifting.
• Check and adjust transmission controls.	• Too much effort to shift or noisy transmission.
• Check clutch fluid level.	• Excessive pedal movement or sluggish action.
• Check Roadranger air filter for dirt or plugging.	• Sluggish transmission shift action.
• Drain water from transmission air filter.	• Governed by climate conditions and transmission action.
• Check torque tandem axle torque arm to brackets cap bolts.	• Vibration indicates looseness.
GASOLINE AND DIESEL ENGINES	
• Check fuel pump pressure and flow – Electric pump (gasoline engines).	• Insufficient full-throttle power or backfiring.
• Lubricate accelerator linkage EXCEPT BALL JOINTS AND PLASTIC BUSHINGS.	• Accelerator does not operate freely.
• Remove and clean radiator coolant level sightglass(es).	• When coolant level is difficult to see.
• Clean radiator cap seal.	• When cap does not hold pressure.
• Torque check engine mounting bolts, fan hub and drive pulley.	• Excessive engine vibration.

(a) Adjust center mesh preload to 2-5 in. lbs. above the minimum specified worm bearing preload. Perform the adjustment at a temperature of 50-75 degrees.

(b) During maintenance and repair, protect nylon tube fuel and air brake lines from external heat, acids, and abrasion that could damage the lines.

(c) Replace SAE 90 E.P. with SAE 80 E.P. hypoid gear lubricant – See Lubricant Specifications.

(d) During moderate temperatures, adjust center mesh preload to the currently published service Specifications and fill the gear with SAE 90 E.P. hypoid gear lubricant – See Lubrication Specification.

(e) Check for free clutch linkage action and make certain return spring force is adequate for maintaining pedal free play.

PART 50-03 Lubrication Charts and Lubricant Specifications

COMPONENT INDEX Applies to Models as Indicated	All Models	Bronco	Econoline	F-100-350	F-Series 4x4	P-Series	500-900 6000-9000
LUBRICATION Lubricant Specifications	03-09						
Lubrication Charts		03-02	03-03	03-04	03-02	03-05	03-08

A page number indicates that the item is for the vehicle(s) listed at the head of the column.

N/A indicates that the item is not applicable to the vehicle(s) listed.

LUBRICATION

LUBRICATION CHARTS

Important lubrication points for typical chassis and engines are shown in Figs. 1 thru 7. When special equipment or accessories are installed on the truck, consult the manufacturer's literature for lubrication procedures.

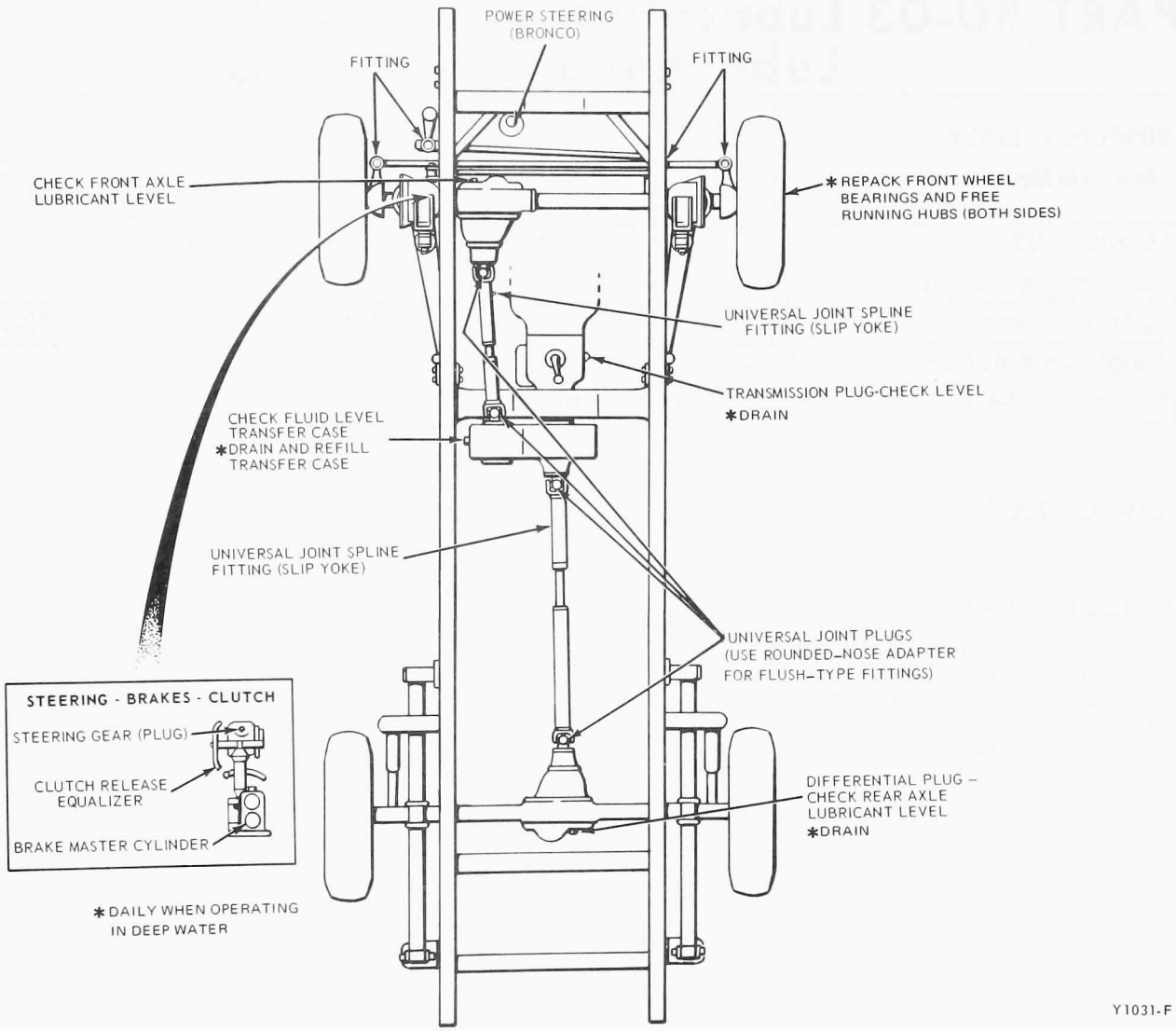

FIG. 1 Lubrication Chart—Typical Bronco and F-Series 4-Wheel Drive

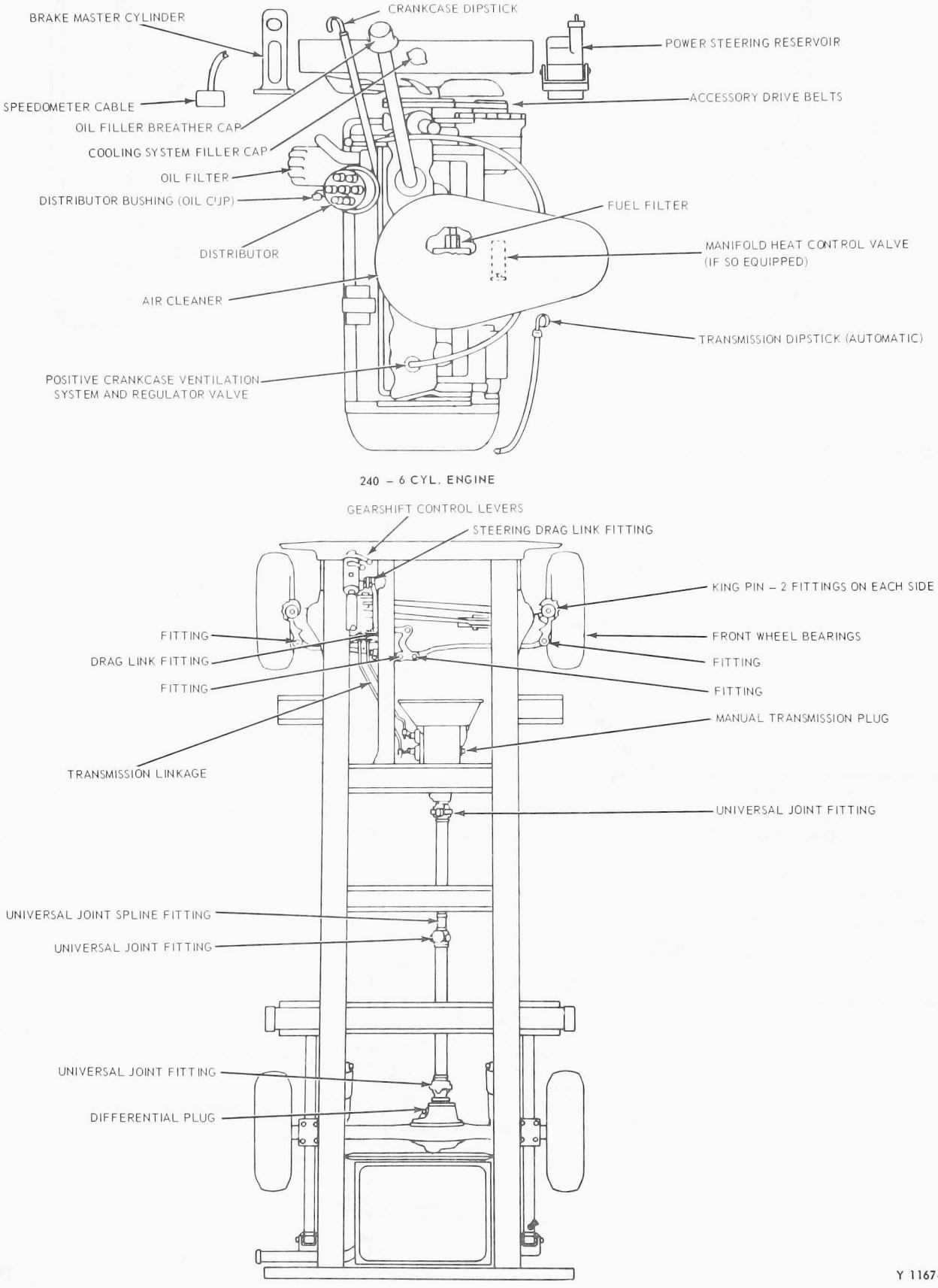

FIG. 2 Lubrication Chart—Econoline

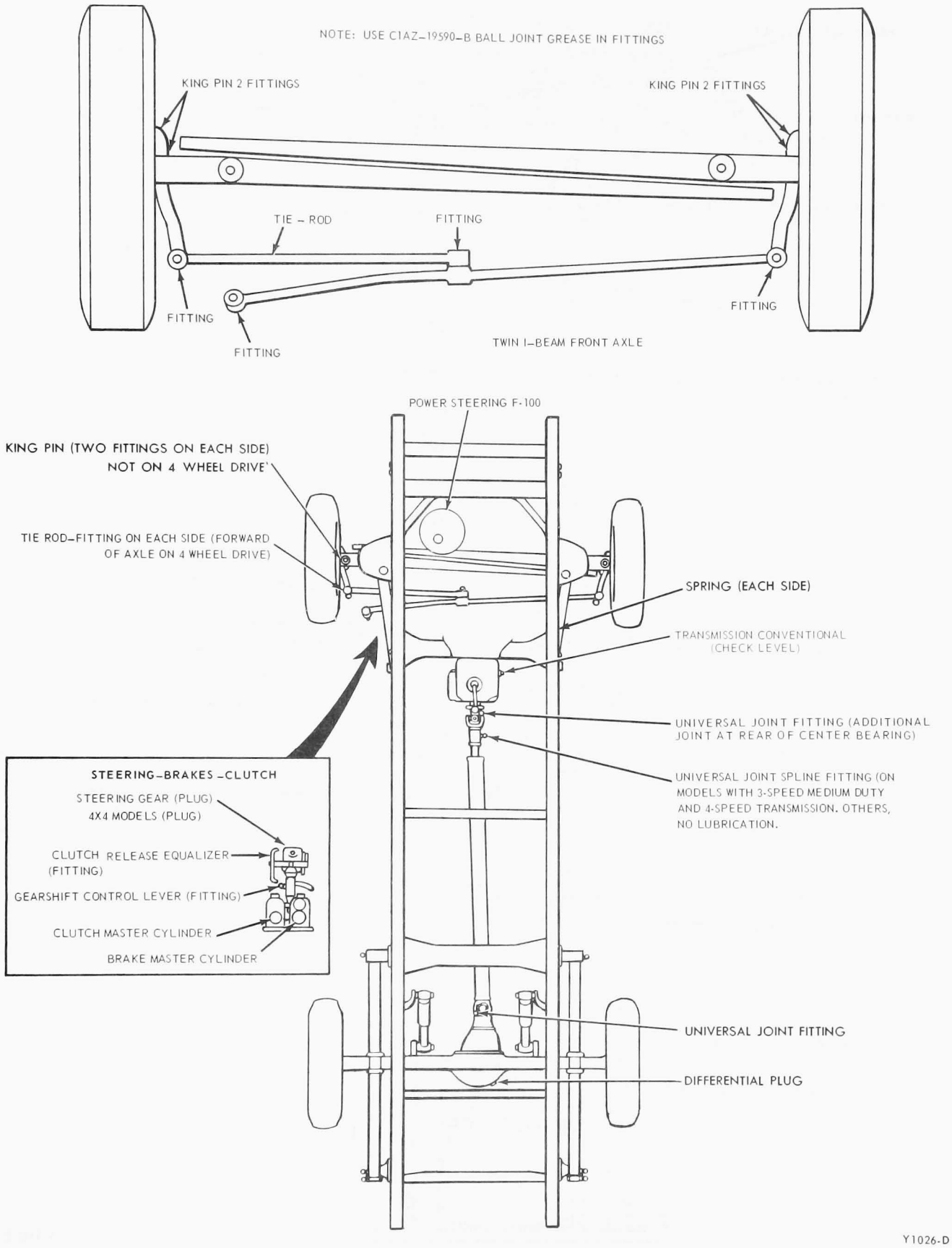

FIG. 3 Lubrication Chart—F-100, F-250 and F-350 (Twin-I-Beam Axle) Trucks

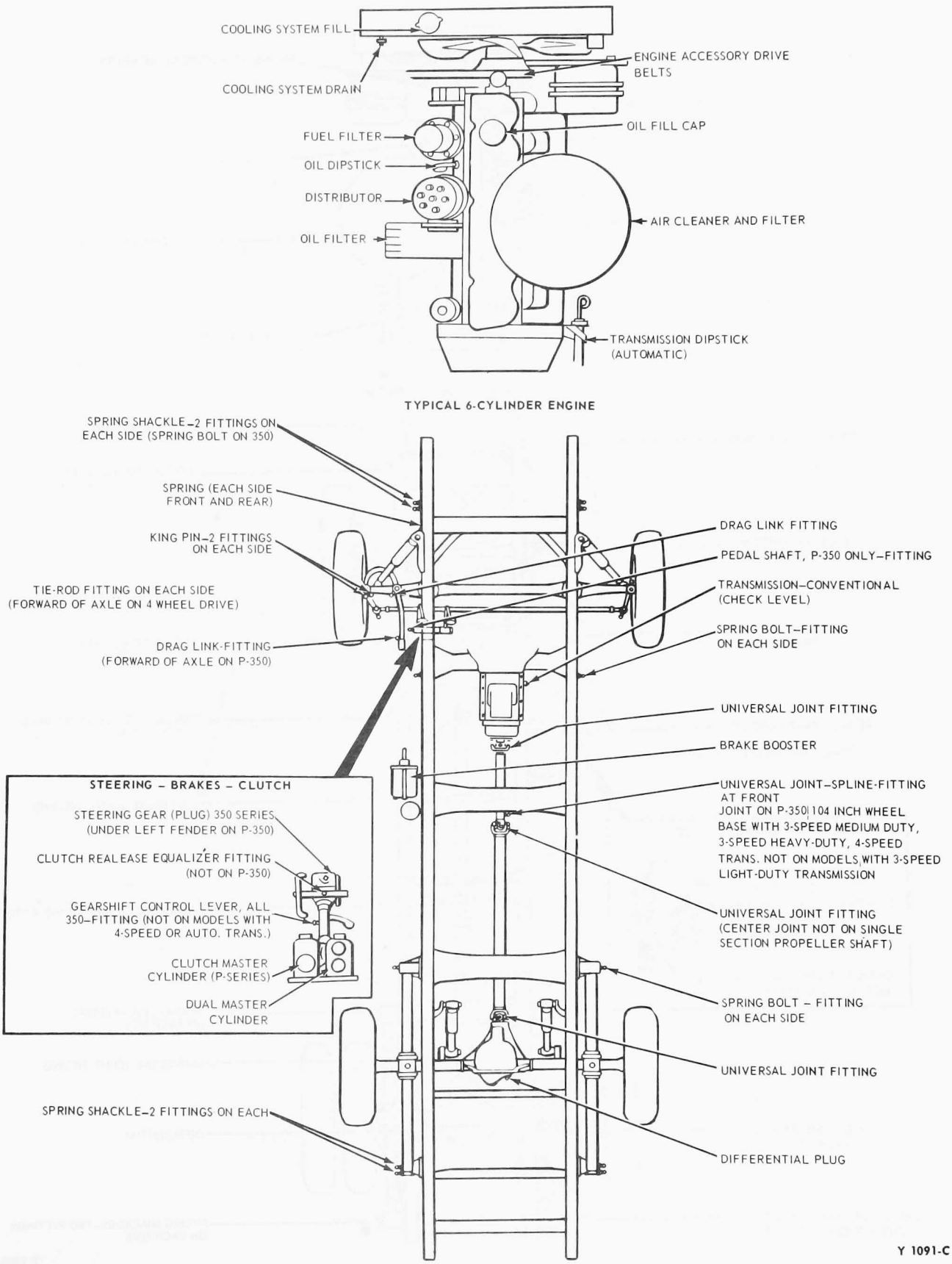

FIG. 4 Lubrication Chart—P-250 and P-350 Trucks

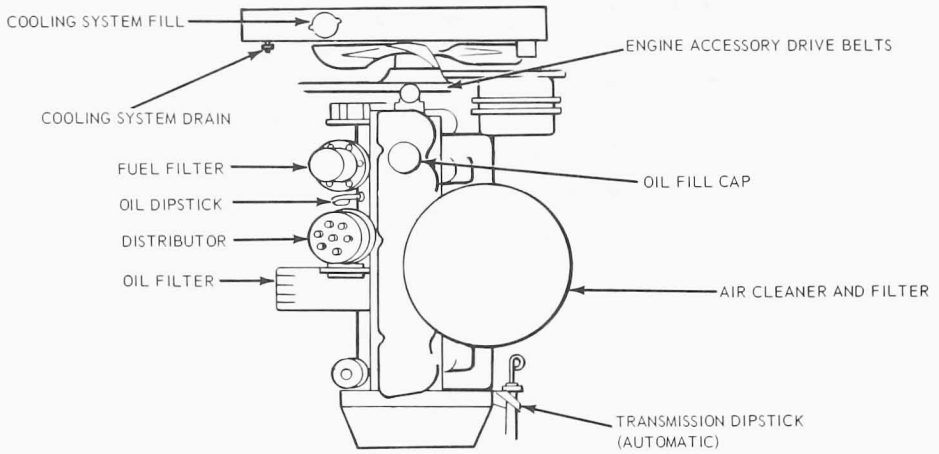

TYPICAL 6 CYLINDER ENGINE

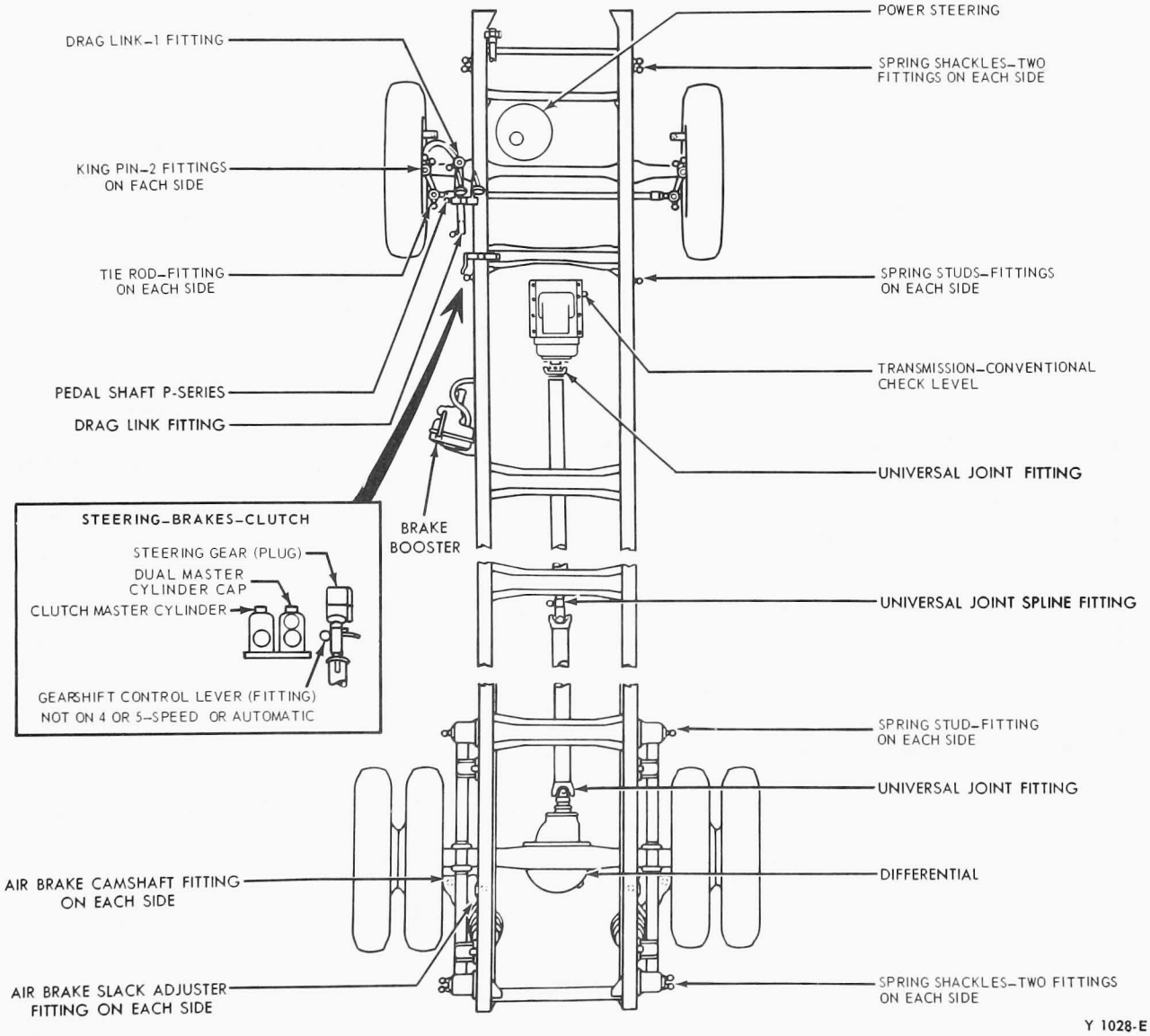

FIG. 5 Lubrication Chart—P-400 and P-500 Trucks

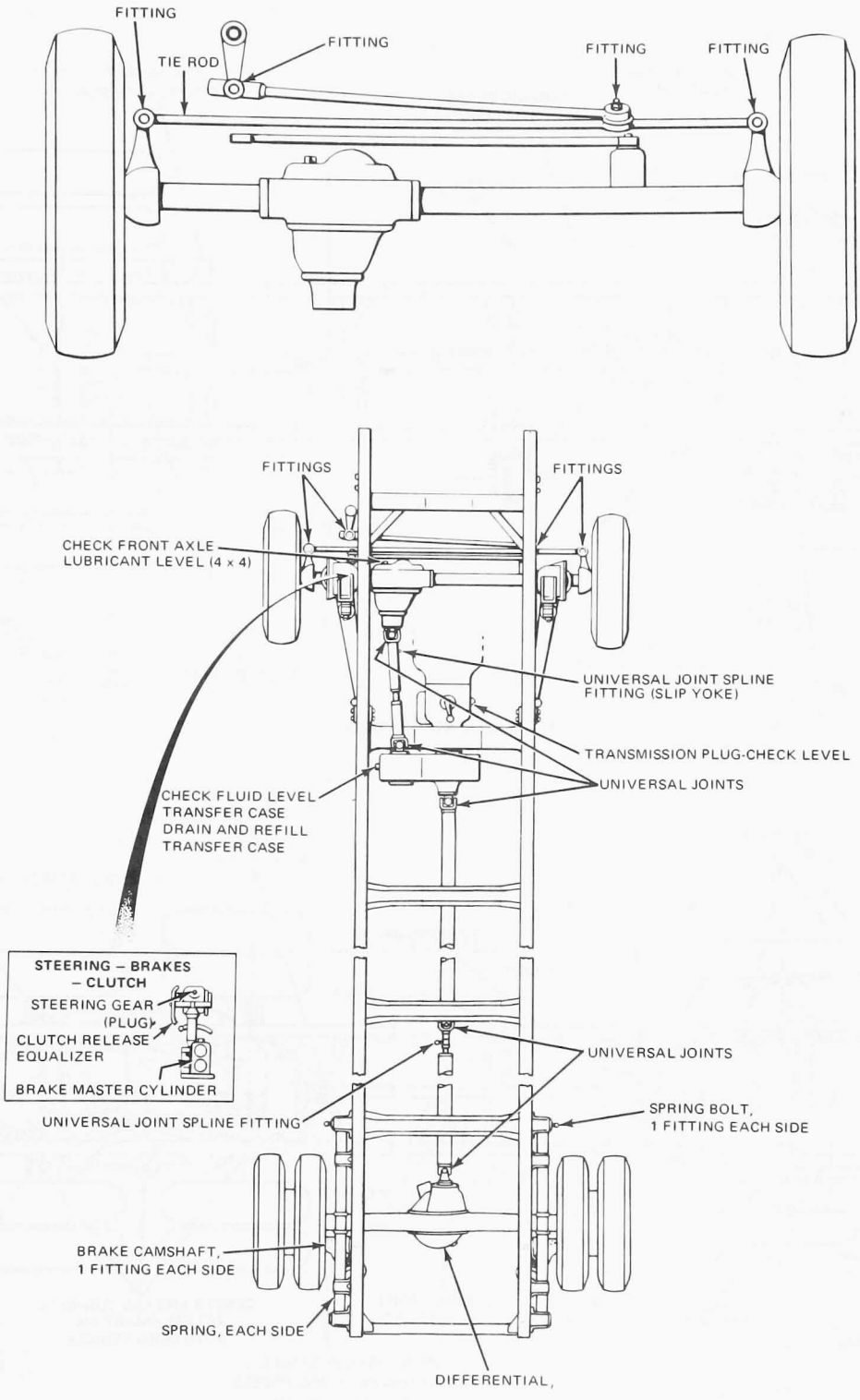

Y 1448-A

FIG. 6 Lubrication Chart—F-600 4-Wheel Drive

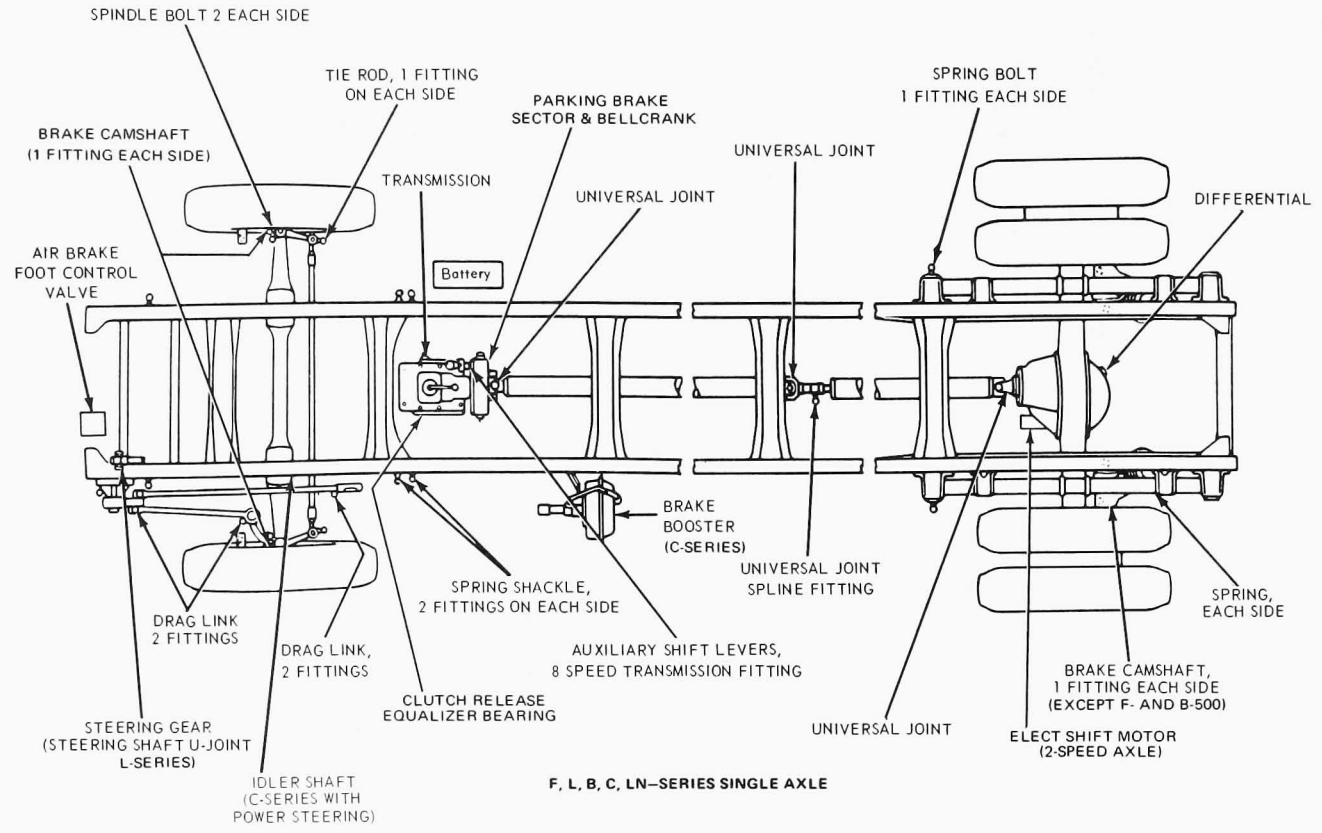

F, L, B, C, LN–SERIES SINGLE AXLE

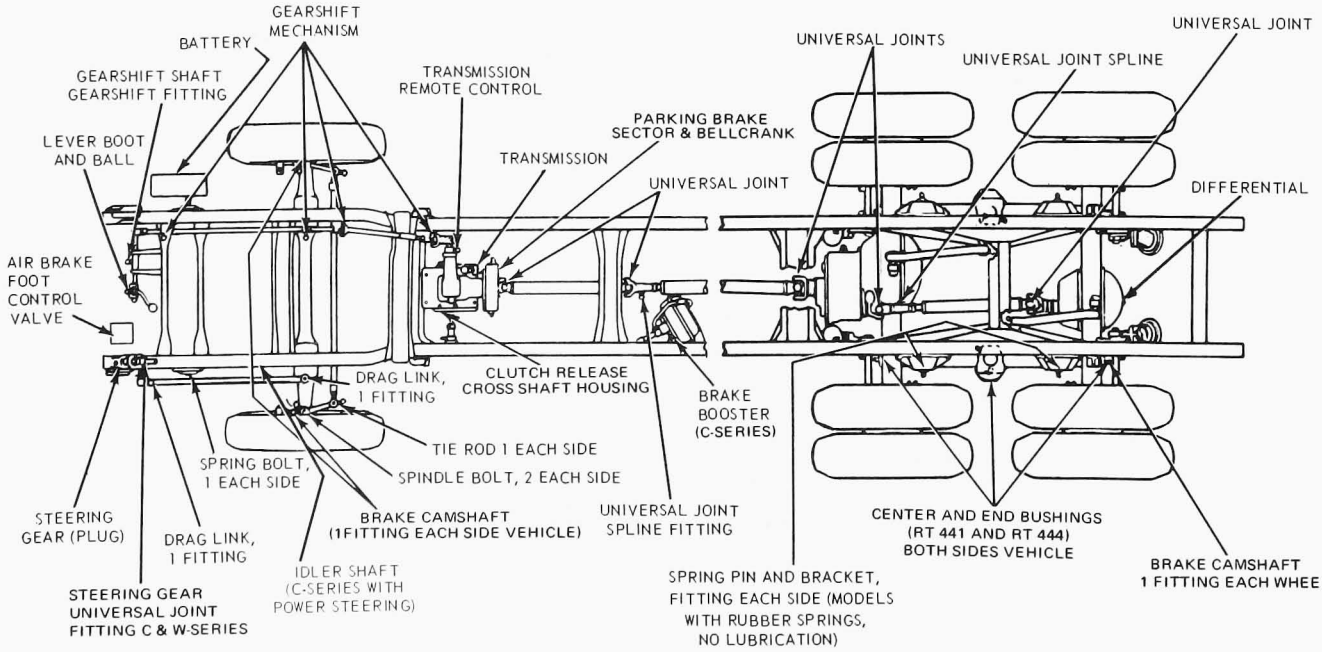

CT, LT AND W–SERIES TWIN AXLE

Y1029-F

FIG. 7 Lubrication Chart—500 Through 900-Series Trucks

SPECIFICATIONS

LUBRICANT SPECIFICATIONS

Item	Ford Part Name	Ford Part No.	Ford Specification
Body Hinges, Latches, Door Striker Plates and Rotors, Seat Tracks, Door Checks	Polyethylene Grease	C4AZ-19584-B	ESB-M1C106-B
Lock Cylinders	Lock Lubricant	B4A-19587-A	ESB-M2C20-A
Distributor Bushing Oil Cup	Engine Oil SAE–10W	–	ESE-M2C35-A
Distributor Cam	Distributor Cam Lubricant	C4AZ-19D530-A	ESF-M1C66-A
Front Axle Spindle Pins, Steering Linkage, Front and Rear Spring Shackle pins, Steering column U-Joints (C and W-Series Only) Clutch Linkage Fittings. Universal joints. Road Ranger Transmission Air Cylinder Shift Lever, Power Steering Control Valve Sleeve (C-Series Only) Center and End Bushings (RT-441 and RT-444 Suspensions), Air Brake Camshafts, Power Steering Cylinder (F-600 4 x 4), and Clutch Release Cross Shaft Housing. ECONOLINE – Shift Control Levers and seat to floor mounting bolts.	Multi-Purpose Lubricant	C1AZ-19590-B	ESA-M1C75-B
Steering Gear Housing (Econoline, F-100, F-250 and F-350 except 4-Wheel Drive)	Steering Gear Lubricant	C3AZ-19578-A	ESW-M1C87-A
Steering Gear (Bronco, P-Series, F-100 and 250 with 4-Wheel Drive, and 500 through 900 Series)	SAE 90 EP Oil	C1AZ-19580-F	ESW-M2C28-BA
Hydraulic Clutch Master Cylinder Brake Master Cylinder	Extra Heavy-Duty Brake Fluid	C6AZ-19542-A or B	ESA-M6C25-A
Air Brake Valve Linkage, Treadle Hinge, and Roller. Radiator Shutter Blade Pivots and Pivot Arms. Spring Leaves. Transmission Linkage Pivots. Accelerator Ball Sockets. Brake and Clutch pedal pivots and clevises. Parking Brake Linkage, Pivots, and clevises. Transmatic Detent Stop Assembly.	Engine Oil SAE 10W	–	ESE-M2C35-A or ESE-M2C101-B
Engine Oil – All Engines except Cummins Diesel	6000-Mile Motor Oil (MS Sequence tested) (Canadian–Long Life Super Premium Motor Oil)	C5AZ-19579-D, E, K, L, M, P, S CC5AZ-19579-A, G, ① CC7AZ-19579-A ①	ESE-M2C101-C
Engine Oil – Cummins Diesel	–	–	②
Front and Rear Wheel Bearings (Except Rear Wheel Bearings on F-100) Spindle Bearings on 4 x 4 Brake and Clutch Pedal Shaft.	Multi-Purpose Lubricant	C1AZ-19590-B	ESA-M1C75-B
Automatic Transmissions, Transmatic Drive Transmission, Power Steering Reservoir (Med, Hvy, Ex. Hvy Only)	Automatic Transmission and Power Steering Fluid	C1AZ-19582-A, C or D	M2C33-F (Type F)
Power Steering Reservoir (Lt. Trk Only)	Power Steering Fluid	D2AZ-19582-A	ESW-M2C128-A
Speedometer, Parking Brake, and Tachometer Cables	Speedometer Cable Lubricant	B5AZ-19581-A	ESF-M1C135-A
45° and 90° Speedometer and Tachometer Adapters	All-Purpose Lubricant	C0AZ-19584-A	ESB-M1C45-A
Air Brake Foot Control Valve	Lithium Base Grease	–	EST-M1C85-A
Carburetor Oil Bath Air Cleaner –	Above 32°F-Engine Oil SAE 30 Below 32°F-Engine Oil SAE 20	– –	ESE-M2C37-A ESE-M2C36-A
Body Lift Pump (W-Series)	Hydraulic Cylinder Oil	–	③

① Canadian Number

② Military Specification – Normally Aspirated: MIL-L-2104-B, Supercharged or Turbocharged: MIL-L-2104-B/MIL-L-45199-B

③ Military specification, MIL-H-5606-B

LUBRICANT SPECIFICATIONS

Item	Ford Part Name	Ford Part No.	Ford Specification
Engine Oil Filter	Autolite or Motorcraft Long Life Oil Filter	C1AZ-6731-A	ES-C8AF-6714-A or C
Accelerator Linkage	SAE 10W Oil	–	ESE-M2C35-A
Front Drive Axle (F-600 4 x 4)	Hypoid Gear Lubricant	C6AZ-19580-B	ESW-M2C105-B
Fuel Injection Pump	Engine Oil – Same Viscosity as Engine	–	ESE-M2C101-B
Rear Axle 750 thru 900 ④ Series and 8000,9000	Hypoid Gear Lubricant (SAE 90)	Above–25°F.C2AZ-19580-F	M2C28-BA
	Hypoid Gear Lubricant (SAE 80)	Below–25°F.C2AZ-19580-B	M2C28-AA
Front and Rear Conventional Axles (Except 750 through 900, 8000 and 9000)	Hypoid Gear Lubricant	C6AZ-19580-B	ESW-M2C105-A⑤
Ford Traction-Lok Axles	Hypoid Gear Lubricant	C9AZ-19580-A	ESW-M2C119-A
Manual Shift, Main and Auxiliary Transmissions (Except Ford 3-Speed)	Engine Oil SAE 50–above 0°F. Engine Oil SAE 30–below 0°F.	C6TZ-19C547-A	ESE-M2C39-A ESE-M2C37-A
Transfer Case – 4-Wheel Drive and 4-Speed Manual Transmission	Above 10°F.-SAE 50 Below 10°F.-SAE 30	C6TZ-19C547-A	ESE-M2C39-A ESE-M2C37-A
Exhaust Control Valve	Rust Penetrant and Inhibitor	C0AZ-19A501-A (Canadian-C8BA-19579-B	ESR-M99C56-A
Ford 3-Speed Manual Transmissions	Standard Transmission Lube	C3RZ-19C547-B	ESW-M2C83-B
Transmission Remote Gearshift Levers, Auxiliary Transmission Linkage and Transmission Cables, U-Joints Crank Arm and Side Bushing (C-Series Only).	Multi-Purpose Lubricant	C1AZ-19590-B	ESA-M1C75-B
Transmission Remote Gearshift Front Cross Shaft Tube (C-Series Only)	Calcium Soap Grease	C7AZ-19590-B	EST-M1C53-A
Two and Three-Speed Axle Shift Unit	Engine Oil SAE 10W Above 0°F.	–	ESE-M2C35-A
	3 Parts SAE 10W Oil to 1 Part Kerosene–Below 0°F.	–	
Drive Shaft, Universal Joints, Slip Spline and Spring Stud Shackles (P-Series) Clutch Release Bearing Hub	Multi-Purpose Lubricant	C1AZ-19590-B	ESA-M1C75-B
Cab Latch Linkage (C-Series) and Cab Lower Latch Locking Cams	Engine Oil SAE 10W	–	ESE-M2C35-A
Vacuum Brake Booster Air Cleaner	Brake Booster Air Cleaner Fluid	D2TZ-19577-A	ESA-M97B23-B

④ (Rockwell axle only). Use Hypoid Gear Lubricant (SAE 140) for operation in temperatures above 0°F.

⑤ For complete refill of Dana limited-slip rear axles, add 2 ounces – Bronco or 4 ounces – Econoline and 100-350 Series Trucks EST-M2C118-A (friction modifier).

CY1168-D1

PART 50-04 Hoisting, Jacking and Towing

COMPONENT INDEX	Page	COMPONENT INDEX	Page
HOISTING		TOWING	
Bronco, Econoline and Light Trucks	04-01	Bronco	04-02
Medium and Heavy Trucks	04-01	Econoline	04-01
JACKING	04-01	F-100—F-350 P and M-Series Trucks	04-02
		500-750 and 6000-7000 Series Trucks	04-02
		800-900 and 8000-9000 Series Trucks	04-02

HOISTING

BRONCO, ECONOLINE AND LIGHT TRUCKS

Damage to suspension and/or steering linkage components may occur when positioning hoist adapters. Front end adapters should be positioned carefully to ensure maximum contact under the center of lower suspension arms or spring supports as near wheels as practical. Rear suspension hoist adapters (forks) should be placed under the spring mounting pads or rear axle housing, but the adapters must not interfere with shock absorber mounting brackets.

MEDIUM AND HEAVY TRUCKS

Hoist adapters for heavy duty hoists should be positioned according to the hoist manufacturers recommendations. Be sure the hoist has a adequate lifting capacity for the vehicle being lifted.

JACKING

GENERAL

CAUTION: On vehicles equipped with a limited-slip differential, do not run the engine with the vehicle on a jack.

When lifting a vehicle with the vehicle jack or any floor jack, block the diagonally opposite wheel to prevent vehicle from moving.

On Bronco, Econoline and light trucks, position vehicle and floor jacks under axles, radius arms or spring hangers as recommended in the vehicle owner's manual.

To raise heavy vehicles with floor jacks, follow the jack manufacturer's recommendations for placement of jack. Do not exceed the rated lift capacity of any jack.

TOWING

ECONOLINE

Make sure the parking brakes are released and the transmission gears are in neutral. It is important to know that the transmission and rear axle are in proper working order before pushing or towing. To move a vehicle with an inoperative axle, it is necessary to raise the rear wheels. If the transmission is inoperative, the drive shaft must be removed or the rear wheels raised, whichever is more convenient. When towing a vehicle with the rear wheels raised, install a locking device to hold the front wheels in a straight-ahead position.

Fasten the towing chains to the bumper brackets at the frame and route the chains under the bumper.

If the vehicle is being towed with the rear wheels on the ground, do not exceed 30 mph, or a distance of 15 miles. If this is not possible, it is advisable to tow the vehicle with the rear wheels raised off the ground, or with the drive shaft disconnected from the rear axle.

BRONCO

Check both front and rear axles for damage. If one axle is damaged, raise the damaged axle off the ground and tow backwards or forwards as described below. **If both axles are damaged, do not tow the vehicle unless a towing dolly is used.**

TOWING ON ALL FOUR WHEELS

1. Shift the transfer case and transmission to neutral position.
2. Disconnect the drive shaft from the rear axle, and tie it up.
3. If the front axle is equipped with free-running hubs, unlock the hubs. If the front axle is not equipped with free-running hubs, disconnect the drive shaft from the front axle and tie it up.

TOWING BACKWARD—REAR WHEELS OFF GROUND

1. Shift the transfer case and transmission to neutral position.
2. Install a locking device to hold the wheels in straight-ahead position.
3. If the vehicle is equipped with free-running hubs, unlock the hubs. If front axle is not equipped with free-running hubs, disconnect the drive shaft from the front axle and tie it up.

TOWING FORWARD—FRONT WHEELS OFF GROUND

1. Shift the transfer case and transmission to neutral position.
2. Disconnect the drive shaft from the rear axle and tie it up.

100-350 AND P-SERIES TRUCKS

STANDARD TRANSMISSION

Don't tow a truck equipped with a manual-shift transmission unless the drive shaft is disconnected (remove the front drive shaft or unlock free-running hubs on 4-wheel drive) since some gears may rotate, even in neutral gear, and lubrication may not be adequate.

When towing 4-wheel drive trucks backward with the rear wheels off the ground, the front wheels must be disconnected from the transmission. To do this, set the free-running hubs (if so equipped) to unlocked position. If the front axle is not equipped with free-running hubs, disconnect the forward drive shaft from the front axle and tie it up.

It is important that towing chains be fastened only to the arm or brackets that attach the bumper to the frame. The chains must be routed under the bottom edge of the bumper. Make sure the parking brake is released and the transmission is in neutral. It is important to know that the transmission and rear axle are in proper working order before towing. To move a truck with an inoperative rear axle, it is necessary to raise the rear wheels. If the transmission is inoperative, the drive shaft must be removed or the rear wheels raised.

If the vehicle is to be towed with the rear wheels raised, a locking device should be installed to hold the front wheels in a straight-ahead position.

AUTOMATIC TRANSMISSION

To tow a truck with automatic transmission less than 15 miles, place the selector lever at N. Be sure that the brakes are released. Don't tow at speeds faster than 30 mph with the rear wheels on the ground. If the truck must be towed more than 15 miles, or if the automatic transmission is inoperative, raise the rear wheels off the ground or disconnect the drive shaft from the axle.

500-750 AND 6000-7000 SERIES TRUCKS

Before towing, make sure the parking brakes are released and the transmission gears are in neutral. It is important to know that the transmission and rear axle are in proper working order before pushing or towing. To move a truck with an inoperative axle, it is necessary to raise the rear wheels. If the transmission is inoperative, the drive shaft must be removed or the rear wheels raised, whichever is more convenient. On 4-wheel drive trucks, the front drive shaft must be disconnected when towing from the rear with front wheels on the ground. **Remove rear axle shafts and seal ends of housing to prevent loss of axle lube before towing trucks with rear wheels on ground.**

For a truck equipped with automatic transmission, be sure that either the rear wheels are lifted off the ground, the driveline is disconnected, or the axle is pulled so that no transmission damage is incurred. Due to the transmission's hydraulic system, the engine cannot be started by pushing or towing.

800-900 AND 8000-9000 SERIES TRUCKS

Before towing, make sure the parking brakes are released and the transmission gears are in neutral. If air pressure is lost, release spring brakes manually. It is important to know that the transmission and rear axle(s) are in proper working order before pushing or towing. To move a truck with an inoperative axle, it is necessary to raise the rear wheels. If the transmission is inoperative, the drive shaft must be removed or the rear wheels raised, whichever is more convenient. **Remove rear axle shafts and seal ends of housing to prevent loss of axle lube before towing trucks with rear wheels on ground.** For a truck equipped with automatic transmission, be sure that either the rear wheels are lifted off the ground, the driveline is disconnected, or the axle is pulled so that no transmission damage is incurred. **Due to the transmission's hydraulic system, the engine cannot be started by pushing or towing.**

NOTE: After towing any tandem axle equipped truck, allow the vehicle to sit on a level surface until lubricant equalizes in both axles. Loss of lubricant may also have occurred during towing—so check lubricant level of power divider and both axles and refill if low.

PART 50-11 Wheels and Tires

COMPONENT INDEX	Page
LUBRICATION	
Wheel Bearings – Front – Repack	11-01
MAINTENANCE	
Tires and Air Pressures – Check	11-05
Wheel Balancing	11-06
Wheel Bearing	
Adjustment	11-05
Check Adjustment	11-05
Wheel Nut Torque Check	11-06
Wheels and Tires – Rotation	11-05
PRE-DELIVERY	
Tire Air Pressure – Check	11-01
Wheel Covers – Install	11-01
Wheel Nuts Torque Check	11-01
SPECIFICATIONS	11-06

PRE-DELIVERY

TORQUE WHEEL NUTS

It is important that wheel stud nuts and clamps be tightened alternately and evenly so that the lateral or side run-out of the wheel does not exceed one-eighth inch on front wheels or one-quarter inch on dual rear wheels.

On dual wheels, be sure to back off the outer nut before tightening the inner stud. Then tighten the outer nut. Some dual wheels are alternately flared inward and outward. These surfaces must be mated when the wheels are mounted.

Tighten all stud nuts to the recommended torque for the vehicle and wheel type (Refer to the Specifications).

WHEEL COVERS

Check for correct type of cover and install. Center the tire stem carefully in opening provided. Caution should be exercised when installing not to distort cover. Use rubber mallet on outer perimeter.

TIRE AIR PRESSURE

Check each tire to insure the air pressure agrees with those specified for the tire and vehicle model.

LUBRICATION

REPACK FRONT WHEEL BEARINGS

Sodium base grease is not compatible with lithium base grease and should not be intermixed. Therefore, do not lubricate front and/or rear wheel bearings without first ascertaining the type of original wheel bearing lubricant. Usage of incompatible bearing lubricants could result in premature lubricant breakdown.

If bearing adjustment will not eliminate looseness or rough and noisy operation, the hub and bearings should be cleaned, inspected, and repacked with specified wheel lubricant (Part 50-03). If the bearing cups or the cone and roller assemblies are worn or damaged, they should be replaced.

LIGHT VEHICLE

1. Raise the vehicle until the wheel and tire clear the floor and remove the wheel and tire from the hub. Remove the grease cap from the hub.
2. Remove the cotter pin, nut lock, adjusting nut and washer from the spindle (Fig. 1).
3. Remove the outer bearing cone and roller. Pull the hub and drum assembly off the wheel spindle. If the drum will not remove easily, back off the brake shoe adjusting screw so that the shoes do not contact the brake drum. Remove and discard the grease retainer. Remove the inner bearing cone and roller from the hub. **Remove all traces of old lubricant from bearings, hubs, and axle spindle.**
4. Inspect the cups for scratches, pits or cracks. If the cups are worn or damaged, remove them with a drift. Clean the inner and outer bearing cones and rollers with solvent and dry them thoroughly. **Do not spin the bearings dry with compressed air.**
5. Inspect the cones and rollers for cracks, nicks, brinelling, or seized rollers. Inspect the grease retainer and replace it if it is cracked, nicked, or dented. If the new grease retainer is leather, soak it in light engine oil for about 30 minutes before installation.
6. Cover the spindle with a clean cloth

and brush all loose dust and dirt from the brake assembly. **Remove the cloth from the spindle carefully to prevent dirt from falling on the spindle.**

7. Install the inner and outer bearing cups in the hub with the appropriate installing tool (Fig. 2). Be sure to seat the cups properly in the hub.

The cups will be properly seated when they are fully bottomed in the wheel hub. Pack the inside of the hub with the specified wheel bearing grease (Part 50-03). Fill the hub until the grease is flush with the inside diameters of both bearing cups. Pack the bearing cones and rollers with wheel bearing grease. Use a bearing packer for this operation. If a packer is not available, work as much lubricant as possible between the rollers and cages. Lubricate the cone surfaces with grease.

8. Place the inner bearing cone and roller in the inner cup and install the grease retainer (Fig. 3) with the appropriate driving tool. Be sure that the retainer is fully bottomed. Install the hub and drum on the wheel spindle. Keep the hub centered on the spindle to prevent damage to the grease retainer or the spindle threads.
9. Install the outer bearing cone and roller and the flat washer on the spindle, then install the adjusting nut.
10. Adjust the wheel bearing as outlined in this part.

F-100-F-350 DISC BRAKE EQUIPPED

The removal and installation of front wheel grease seals and bearings for disc brake equipped vehicles differs only in two respects from the procedure for drum brake equipped vehicles. First it is necessary to remove the brake caliper (refer to Group 12, Part 24). In this case the caliper can be suspended by wiring it above the hub and rotor. **Be careful not to twist or strain the flexible brake line.**

Then follow the procedure outlined for E-100-E-300 and P-350-P-500 with only one exception. A different tool T-73T-1190-B is required to install the special shielded grease seal. Finally install the brake caliper following the steps given in Group 12, Part 24 of Volume I.

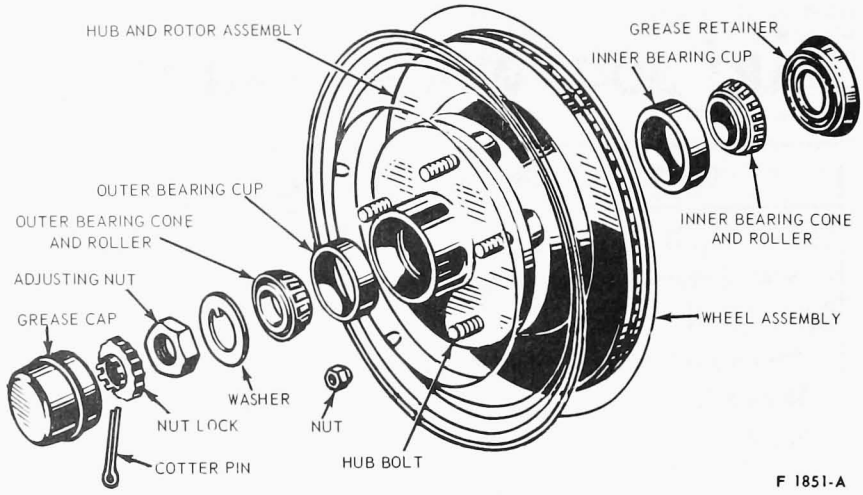

FIG. 1 Front Hub, Bearings and Grease Retainer—F-100 Through F-350

MEDIUM, HEAVY AND EXTRA HEAVY VEHICLES

There are two basic types of hubs, disc and cast (Fig. 4). The basic design of the hub bearings is the same in all hubs, but minor differences in size exist between the various models. The outer bearing attaching parts differ according to front axle weight capacity as indicated in Fig. 4.

1. Raise the vehicle until the tires clear the floor and install safety stands to support the front axle. Remove the grease cap and gasket from the hub.
2. To check the wheel bearing adjustment, alternately push inward and outward on the tire. If any excessive looseness is felt or there is no end play, adjustment of the front wheel bearings is necessary.
3. With 5000, 5500, 6000, 7000, 16000, 18000 or 20,000 pound capacity front axles, remove the cotter pin, adjusting nut and flat washer from the spindle. With 9000, 12000 or 15000 pound capacity front axles, remove the lock nut, washer, locking ring and the adjusting nut and pin. With a 12000 pound capacity center point front axle, remove the lock nut, inner washer, adjusting nut and outer washer.
4. Inspect the condition of the spindle and nut threads to insure a free running nut when reassembling.
5. Remove the outer bearing cone and roller. Pull the hub and drum assembly off the spindle. Remove

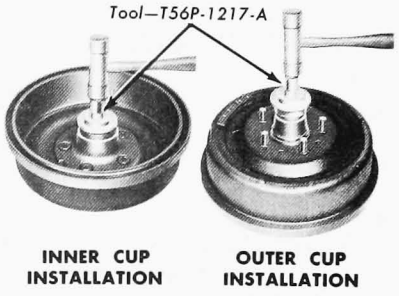

FIG. 2 Installing Bearing Cups—2-Wheel Drive

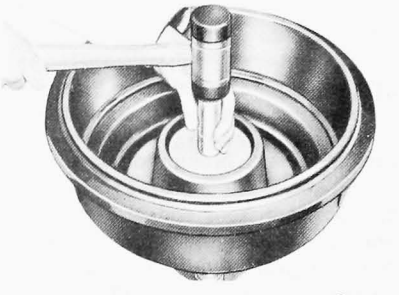

FIG. 3 Installing Grease Retainer

the inner bearing and seal using a brass drift. **Be careful not to damage the bearing cage.**

6. Remove all traces of old lubricant from the bearings, hubs and axle spindle. Inspect the cups for pitting, galling or unusual wear. If either cup is worn or damaged, remove it with a brass drift. Clean the inner and outer bearing cones and rollers with solvent and dry them thoroughly. **Do not spin the bearings dry with compressed air.**
7. Inspect the cones and rollers for pitting, galling or unusual wear. Particularly inspect the rollers for end wear and flat or rough spots. Replace all worn or damaged assemblies. It is recommended that the cone and roller assemblies and cups be replaced in sets.
8. Cover the spindle with a clean cloth and brush all loose dust and dirt from the brake assembly. Remove the cloth from the spindle carefully to prevent dirt falling on the spindle.
9. Install the inner and outer bearing cups in the hub with the appropriate tool (Fig. 5). Check for proper seating of the new bearing cups by trying to insert a 0.0015 inch feeler gauge between the cup and wheel hub. The feeler gauge should not enter.
10. Pack the inside of the hub with Lithium base wheel bearing grease (Part 50-03). Fill the hub until the grease is flush with the inside diameters of both bearing cups. Pack the bearing cones and rollers with wheel bearing grease. Use a bearing packer for this operation. If a packer is not available, work as much lubricant as possible between the rollers and cages. Lubricate the cone surfaces with grease.
11. Place the inner bearing cone and roller in the inner cup and install a new grease retainer with the appropriate tool (Fig. 5). Be sure the retainer is fully bottomed. On all synthetic type seals, coat the seal lips with wheel bearing grease (Part 50-03) before installing the hub and drum. On seals which are not coated on the outside diameter with sealer by the supplier, coat the grease seal bore in the hub with a thin coat of non-hardening sealer prior to installing the grease seal.
12. Install the hub and drum on the wheel spindle. **Keep the hub centered on the spindle to prevent damage to the grease retainer or the spindle threads.**
13. With 5000, 5500, 6000, 7000, 16,000, 18,000 or 20,000 pound capacity front axles, install the outer bearing cone and roller and the flat washer on the spindle. Then, install the adjusting nut. With 9000, 12,000 and 15,000 pound capacity front axles, install the outer bearing cone and roller and the bearing adjusting nut. With a 12,000 pound capacity center point front axle, install the washer and adjusting nut.

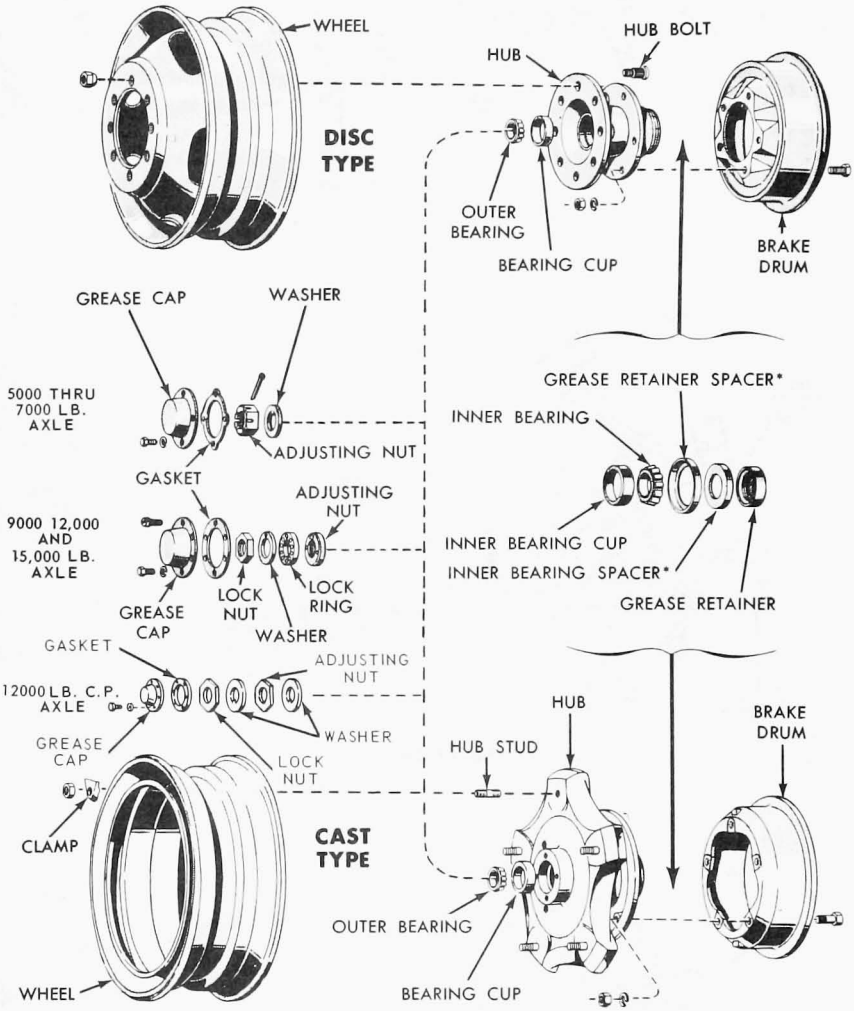

FIG. 4 Typical Front Hubs and Bearings

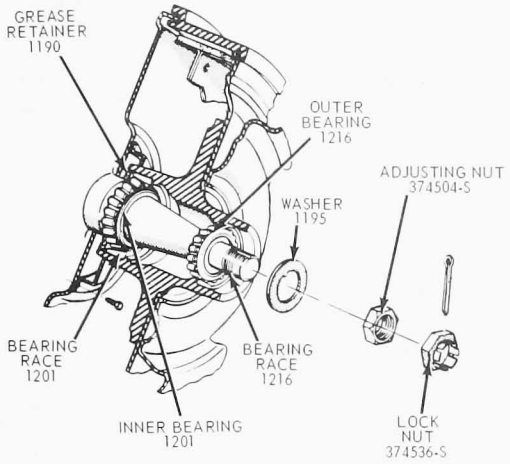

P - SERIES

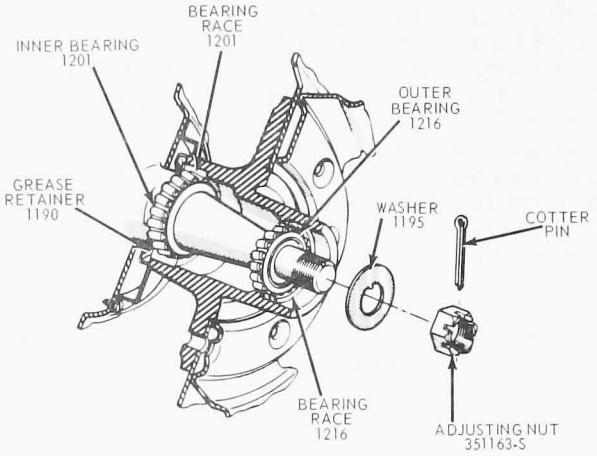

5000 - 5500 - 6000 - 7000 LB. AXLES

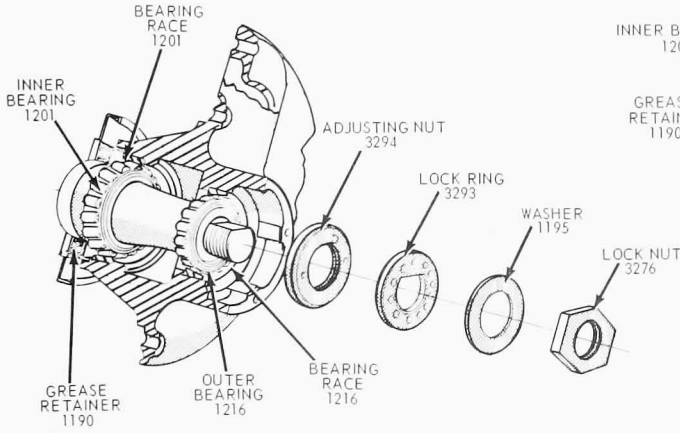

9000 - 12000 LB. AXLES

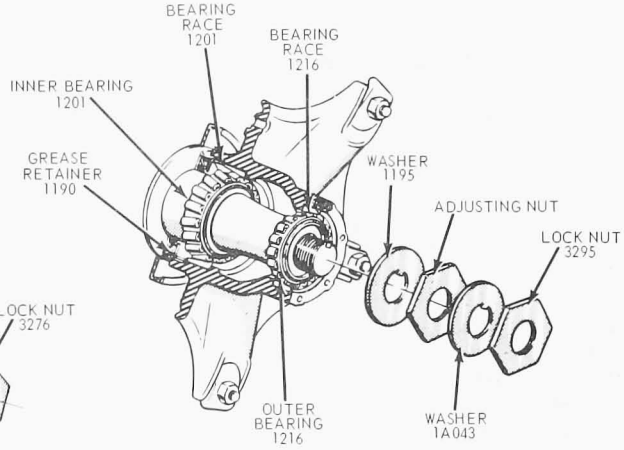

12000 LB. AXLE
(CENTER POINT)

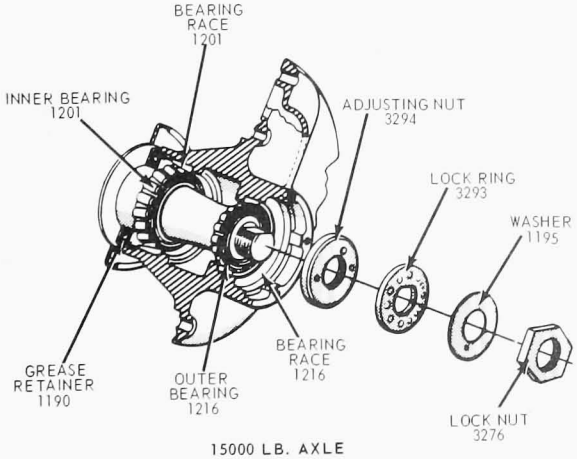

15000 LB. AXLE

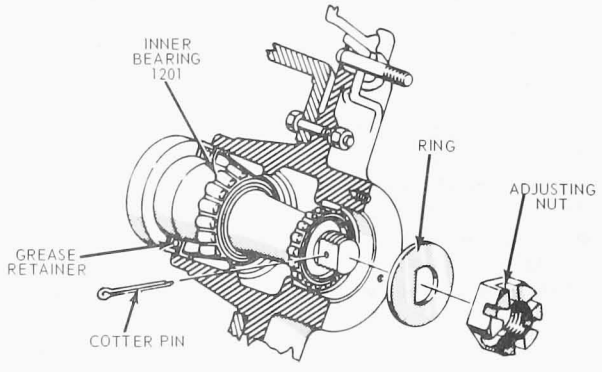

16000, 18000, 20000 LB. AXLES

F1474-C

FIG. 5 Front Hub, Bearings and Grease Retainer

MAINTENANCE

TIRES AND AIR PRESSURES

Inspect the tire threads, and remove all stones, nails, glass or other objects that may be wedged in the thread grooves. Check for holes or cuts that may permit air leakage from the tire, and make the necessary repairs.

Inspect the tire side walls for cuts, bruises, and other damage. If internal damage to the tire is suspected, demount the tire from the wheel or rim for further inspection and repair or replacement.

Check the tire valve for air leaks, and replace the valve if necessary. If the valve cap is missing, install a new cap.

The tires should be checked frequently to insure the air pressure agrees with those specified for the tire and vehicle model.

ROTATE WHEELS AND TIRES

If wheels and tires are rotated, the spare tire should be included as shown in Fig. 6. On a vehicle with dual rear wheels, tire cross-switching is desirable but may not be possible when different size tires are used on the front and rear wheels.

Dual tires should be matched so that the tire diameters are within 1/4 inch of each other with the small diameter on the inner wheel to conform to the road. Tighten wheel stud nuts to specifications.

CHECK FRONT WHEEL BEARING ADJUSTMENT

Check the front wheel bearings for proper adjustment when the wheel is off the ground. Grasp the tire at the sides and alternately push inward and pull outward on the tire. If any looseness is felt, adjust the wheel bearing.

FRONT WHEEL BEARING ADJUSTMENT

F-100, 250, 350, ECONOLINE

1. Remove the hub cap and remove the grease cap from the hub.
2. Wipe any excess grease from the end of the spindle and remove the cotter pin and nut lock.
3. While rotating the wheel, torque the adjusting nut (Fig. 1) to 17-25 ft-lb to seat the bearings.
4. Install the nut lock so that the cotter pin hole in the spindle is aligned with a slot in the nut lock.
5. Back off the adjusting nut and nut lock two slots of the nut lock and install the cotter pin.
6. Check the front wheel rotation. If the wheel rotates freely with no noticeable end play, install the grease cap. If the wheel is still loose, or it rotates roughly or noisily, the bearing cones and rollers and the cups are dirty or worn and should be cleaned or replaced.
7. Install the hub cap.

P-350 THRU 500

1. Remove the hub cap, if so equipped, and remove the grease cap from the hub.
2. Remove any excess grease from the end of the spindle and remove the adjusting nut cotter pin.
3. While rotating the wheel, torque the adjusting nut (Fig. 5), to 40-55 ft-lbs to seat the bearings.
4. Back off the adjusting nut to the next castellation if necessary to align the nut with the cotter pin hole. Then, back off the adjusting nut two castellations and install the cotter pin.
5. Check the front wheel rotation. If the wheel rotates freely with no noticeable end play, install the grease cap. If the wheel is still loose, or it rotates roughly or noisily, the bearing cones and rollers and the cups are dirty or worn and should be cleaned or replaced.
6. Install the hub cap, if used.

ALL MEDIUM, HEAVY AND EXTRA HEAVY TRUCKS

Single Nut with Cotter Pin (5000-7000 Pound Front Axles)

1. While rotating the wheel, torque the adjusting nut to 70-100 ft-lb to seat the bearings.
2. Back off the adjusting nut 180 degrees (one half turn).
3. Hand tighten the adjusting nut finger tight (13-17 in-lb) while moving the top part of the tire in and out.
4. If the cotter pin hole lines up with a castellation in the nut, insert and secure a new cotter pin. If they do not line up, back off the adjusting nut to align a castellation with the first available cotter pin hole. Final bearing adjustment must provide .001-.010 end play.
5. Install the gasket and grease cap and adjust the brakes. **The final adjustment must not result in a preloaded bearing.**

Double Nut with Lock Ring (1500 Pound Front Axle)

1. While rotating the wheel in both directions, torque the adjusting nut to 100-125 ft-lbs to seat the bearings.
2. Back off the adjusting nut one complete turn (Fig. 5).
3. Again while rotating the wheel in both directions, retorque the adjusting nut to 40-55 ft-lb.
4. Back off the adjusting nut to obtain an initial .004 and .010 inch end play between the wheel hub and spindle.
5. Install the lock ring.
6. Install the washer with the dimple indexed in one of the holes in the locking ring.
7. Install the lock nut and torque to 100-125 ft-lb.
8. Recheck the end play (Final limit .001 to .010 inch). Re-adjust if necessary.
9. Bend the washer outward to lock the nut in position.
10. Install the gasket and grease cap and adjust the brakes. **The final adjustment must not result in a preloaded bearing.**

Double Nut with Double Washer (1200 Pound Center Point Axle)

1. While rotating the wheel in both directions, torque the adjusting nut to 100-125 ft-lb to seat the bearings.
2. Back off the adjusting nut one complete turn (Fig. 5).
3. Again while rotating the wheel in both directions, retorque the adjusting nut to 40-55 ft-lb.
4. Back off the adjusting nut to obtain an initial .004 to .010 inch end play between the hub and spindle.
5. Install the outer washer and lock nut and torque to 100-125 ft-lb.
6. Recheck the end play (final limit .001 to .010 inch). Re-adjust if necessary.
7. Install the gasket and grease cap and adjust the brakes. **The final adjustment must not result in a preloaded bearing.**

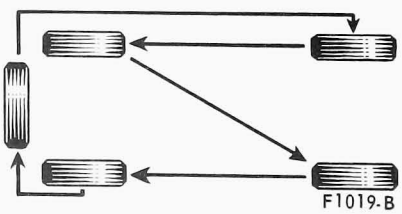

FIG. 6 Tire Cross Switching Diagram

Single Nut with Cotter Pin (16000, 18000 and 20000 Pound Front Axle)

1. While rotating the wheel in both directions, torque the adjusting nut to 100-125 ft-lb to seat the bearings.
2. Back off the adjusting nut one complete turn (Fig. 5).
3. Again while rotating the wheel in both directions, retorque the adjusting nut to 40-55 ft-lb.
4. Back off the adjusting nut if necessary to align the nut castellations with the first available cotter pin hole.
5. Using the same cotter pin hole as a reference point, back off the adjusting nut **one additional castellation** to allow the wheel to rotate freely within the limits of .001 to .010 inch end play.
6. Insert and secure the cotter pin.
7. Install the gasket and grease cap and adjust the brakes. **The final adjustment must not result in a preloaded bearing.**

Double Nut with Lock Ring (9000 and 12000 Pound Front Axle)

1. While rotating the wheel in both directions, torque the adjusting nut to 100-125 ft-lb to seat the bearing.
2. Back off the adjusting nut one complete turn.
3. Again while rotating the wheel in both directions, retorque the adjusting nut to 40-55 ft-lb.
4. Back off the adjusting nut to obtain an initial .004 to .010 inch end play between the wheel hub and spindle.
5. Install the lock ring making sure the adjusting nut dowel is inserted into the lock ring.
6. Install the outer washer and lock nut. Torque to 100-150 ft-lb.
7. Recheck the end play (final limit .001 to .010 inch). Readjust if necessary.
8. Bend the washer outward to lock the outer nut in position.
9. Install the gasket and grease cap and adjust the brakes. **The final adjustment must not result in a preloaded bearing.**

TORQUE WHEEL NUTS

It is important that the wheel stud nuts and clamps be tightened alternately and evenly so that the lateral or side run-out of the wheel does not exceed one-eighth inch or front wheels or one-quarter inch on dual rear wheels.

On dual wheels, be sure to back off the outer nut before tightening the inner stud. Then tighten the outer nut. Some dual wheels are alternately flared inward and outward. These surfaces must be mated when the wheels are mounted.

Tighten all the stud nuts to the recommended torque for the vehicle and wheel type (refer to the Specifications).

WHEEL BALANCING

Refer to the instructions provided by the wheel balancer manufacturer.

Make certain that the brakes are not dragging, before attempting to spin the wheels.

SPECIFICATIONS

Refer to the 1973 Truck Shop Manual for any specifications or Special Tools not contained in this Section.

WHEEL NUT TORQUE LIMITS

Model	Nut Size	Ft-Lbs
E-100, E-200 F-100 (4 x 4) U-100 (Std. Wheel) F-250 (4 x 4) P-350, 3500 (W–5200 lb. Axle)	1/2–20	90
E-300 (8-Stud Wheel)	9/16–18	135
F-350, P-350, P-450 P-3500, P-4000 (W/Dual Wheels and 7400 lb. Axle		210

Model	Nut Size	Ft-Lbs
P-350, P-3500, P-4000 (W/17" Wheels)	5/8–18	210
P-500	3/4–16 or 1-1/8–15	400–500
Wheel Bearing Lock Rear (All)		100–150
500	3/4–16	400–500
thru	1-1/8–16, 1-1/2–16	400–500
9000	5/8–11	170–200
Series	3/4–10	170–220

CY1397-B

PART 50-12 Brakes

COMPONENT INDEX	Page
LUBRICATION	
Air Brake Foot Control Valve	12-02
Brake Pedal Pivot Shaft	12-02
Parking Brake Cable	12-02
Parking Brake Linkage	12-02
MAINTENANCE	
Air Brake Air Reservoir	12-02
Air Compressor Filter	12-02
Air Filter Replacement – MGM Low Profile and Short-Stop Brakes	12-10
Brake Adjustment	
Air	12-07
Hydraulic	12-03
Parking	12-07
Brake Backing Plate (Carrier) Bolts Torque Check	12-02
Brake Lining and Drum Inspection	12-02
Brake Manual Release – Spring Brake	12-09
Brake Pedal Free Travel – Hydraulic Brakes	12-10
Master Cylinder Fluid Level Check – Hydraulic Brakes	12-01
Parking Brake – Internal Expanding Shoe Cleaning	12-03

COMPONENT INDEX	Page
MAINTENANCE (Cont.)	
Vacuum Booster Air Cleaner Cleaning – Frame Mounted	12-03
Vacuum Booster Air Cleaner Replacement – Frame Mounted	12-02
Vacuum Booster Oil Bath Air Cleaner – Frame Mounted	12-03
PRE-DELIVERY	
Brake Adjustment – Saddle Mount Delivery	12-01
Brake Fittings, Connections, Lines and Components Check–Air Brake	12-01
Brake Lines and Fittings Check – Hydraulic Brakes	12-01
Brake Operation	
Parking Brakes	12-02
Service Brakes	12-01
Buzzer and Gauge Operation Check – Air Pressure	12-01
Governor Operation Check – Air Compressor	12-01
Master Cylinder Fluid Level Check – Hydraulic Brakes	12-01
SPECIFICATIONS	12-11

PRE-DELIVERY

AIR PRESSURE BUZZER AND GAUGE OPERATION CHECK

Check operation. Operate brakes to drop pressure below 40 psi for test. With engine running, buzzer should sound and continue sounding until pressure builds up to 58-65 psi.

AIR COMPRESSOR GOVERNOR OPERATION CHECK

With engine running, the dash panel gauge should show governor cut-out at 118-126 psi, and cut-in at 98-104 psi. Adjust if required.

CHECK HYDRAULIC BRAKE MASTER CYLINDER FLUID LEVEL

The level should be maintained from full to 1/4 inch below the top of the reservoir on both single and dual master cylinders. Use only the specified brake fluid. Refer to the Lubricant Chart in Part 50-03.

HYDRAULIC BRAKE SYSTEM—CHECK BRAKE LINES AND FITTINGS

Check the brake lines and hoses for fluid leaks and/or loose connections. Inspect lines and hoses for kinks and interference with adjacent moving or frictional components. Check the brake booster and master cylinder for vacuum and fluid leaks. Tighten and correct as required.

AIR BRAKE SYSTEM—CHECK FITTINGS, CONNECTIONS, LINES AND COMPONENTS

Check for evidence of leakage at all fittings. Inspect lines for kinks and interference with adjacent moving or frictional components. Check for proximity to exhaust system. Tighten and correct as required. **CAUTION: During maintenance and repair, protect nylon tube air brake lines from external heat, acids and abrasion that could damage the lines.**

ADJUST BRAKES—SADDLE MOUNT DELIVERY

When a truck is delivered by saddle mount transportation, the rear wheel brakes must be adjusted at vehicle predelivery. This is necessary because the brakes are backed-off before a saddle mount delivery is made. Refer to the Maintenance Section of this part for adjustment procedures.

BRAKE OPERATION

Check and correct, as required, the following conditions: pull in either

direction, harshness or noise, excess pedal effort, or spongy feel. Avoid sudden hard stops—make slow, gradual stops, Check pedal height. On Econoline, F-100 and also F-250 when equipped with optional heavy duty brakes, it may be necessary to make a few reverse stops to fully adjust brakes.

PARKING BRAKE OPERATION

The parking brakes should be adjusted so that the vehicle will be held stationary on a reasonable grade when the parking brake control is fully applied.

LUBRICATION

LUBRICATE PARKING BRAKE CABLE AND LINKAGE

Raise the vehicle on a hoist, clean all old lubricant from the cable, and sparingly apply specified Speedometer Cable Grease (Part 50-03).

Lubricate all clevis pins and pivot points with SAE 10W engine oil.

LUBRICATE BRAKE PEDAL PIVOT SHAFT

On all except P-Series and air brake equipped vehicles, apply SAE 10W oil to the brake pedal shaft. On P-Series, apply the specified Chassis Lube with a pressure gun at the fitting.

LUBRICATE AIR BRAKE FOOT CONTROL VALVE

Lubricate the treadle pivots, roller and plunger face. Use only the specified lubricant recommended in Part 50-03.

MAINTENANCE

CHECK AND CLEAN AIR COMPRESSOR FILTER

Remove and disassemble the air inlet filter. If it is dirty and clogged, wash all parts, including the filter element, in a suitable cleaning solvent. Saturate the filter element with clean light engine oil and squeeze dry before placing it in the filter body. Assemble and install the filter.

CHECK AIR BRAKE AIR RESERVOIR

Check the connections to the air brake reservoir for leaks. Check to be sure the drain cock is closed and the reservoir is securely attached. Make any necessary corrections.

INSPECT BRAKE LININGS, BRAKE DRUMS, AND TORQUE BRAKE BACKING (CARRIER) PLATE ATTACHING BOLTS

1. Raise all four wheels. Remove one of the front brake drums, and inspect the drum and the linings (the wheel bearings should be inspected at this time and repacked if necessary). **Do not let oil or grease touch the drum or the linings.** If the linings are worn to within 1/32 inch of the rivet heads, replace or reline both sets (primary and secondary) on the front or rear wheels. **Do not replace one lining only, or one wheel set under any circumstances. Both front wheel sets or both rear wheel sets should be replaced whenever a respective lining or shoe is worn or damaged.** If the drum braking surface is excessively scored, refinish it. The condition of the remaining front linings is usually about the same as that of the one inspected. The rear brake linings may also need replacing at the same time.
2. Before relining a brake shoe, inspect the shoe for distortion, cracks, or looseness between the rim and web. If one of these conditions exists, replace the shoe. **Do not attempt to repair a damaged brake shoe.**
3. **On all truck series, be sure that the parking brake handle is fully released before making any brake adjustments.**
4. Check the front brake anchor pin nut with a wrench (on brake assemblies with an adjustable anchor pin). If the bolt is loose, tighten it to 80-100 ft-lbs torque.
5. Check the brake backing (carrier) plate attaching bolt torque. Torque to specifications.
6. With disc brakes, make a thickness measurement with a micrometer across the thinnest section of the shoe and lining. If the assembly has worn to a thickness of 0.231 inch (shoe and lining together) or 0.030 inch (lining material only) at any one of the three measuring locations or if lining shows evidence of brake fluid contamination, replace all (4) shoe and lining assemblies on both front wheels.

CLEAN FRAME MOUNTED VACUUM BOOSTER AIR CLEANER (P-SERIES EXCEPT P-350)

The air cleaner is mounted on the radiator support and connected to the booster by a hose. Disconnect the hose and remove the cleaner assembly. Wash the cleaner in a suitable solvent and saturate the filter element with SAE 10W engine oil. Mount the air cleaner on the radiator support and connect the hose.

REPLACE FRAME MOUNTED VACUUM BOOSTER AIR CLEANER— 500 THROUGH 900, EXCEPT C-SERIES

The air cleaner is mounted on the forward side of the dash panel on F-and B-600 through 750 cowl model trucks. On all other 500 through 900 except C- and P-Series trucks, the air cleaner is located in the cab behind the driver's seat. When the air cleaner becomes clogged and dirty, replace it with a new one.

CLEAN AND REFILL FRAME MOUNTED VACUUM BOOSTER OIL BATH AIR CLEANER—C-SERIES WITH SPLIT HYDRAULIC BRAKES

On C-Series models, an oil bath air cleaner is mounted on a rear frame crossmember cylinder (Fig. 1). To service the air cleaner element, grasp the lower housing and unscrew it from the air cleaner cover. Slide the filter element, housing and sleeve assembly off the center bolt. Drain the fluid from the lower housing and remove the baffle plate. No further disassembly should be attempted. Rinse the filter element, housing and the sleeve assembly in clean isopropyl alcohol. Rinse the baffle plate and the inside of the lower housing with the same solvent. Use an air hose to blow dirt out of the lower housing. **Do not use an air hose on the filter element.** If the filter element is too dirty to clean, replace the element, housing and the sleeve as an assembly. Use a cloth dampened with isopropyl alcohol to wipe the inside of the air cleaner cover and the hose nipple. If the gasket in the cover is loose, cement it securely to the cover with Permatex No. 1. If it is damaged, replace the gasket. Insert the baffle plate, legs first, in the lower housing and fill to the level indicated with DSTZ-19577-A (ESA-M97B23-B) oil. Slide the filter assembly onto the center bolt in the lower housing and screw the center bolt into the cover. Hand tighten the lower housing.

CLEAN INTERNAL EXPANDING SHOE PARKING BRAKE (WITHOUT DUST SHIELD)

Remove the universal joint assembly and drive shaft from the parking brake drum. Remove the drum from the transmission. Clean the dirt and dust from the brake shoes and drum with a scraper and air hose. Install the brake drum and connect the universal joint and drive shaft.

ADJUST HYDRAULIC BRAKES

The brake drums should be at normal room temperature, when the brake shoes are adjusted. If the shoes are adjusted when the drums are hot and expanded, the shoes may drag as the drums cool and contract.

A minor brake adjustment re-establishes the brake lining-to-drum clearance and compensates for normal lining wear.

A major brake adjustment includes the adjustment of the brake shoe anchor pins, if so equipped, as well as the brake shoes. Adjustment of the anchor pin permits the centering of the brake shoes in the drum.

Adjustment procedures for each type of brake assembly are given under the applicable heading.

SELF ADJUSTING BRAKES—F-100-350, E-100-300, P-350 AND BRONCO

The brake shoes are automatically adjusted when the truck is driven in reverse and the brakes applied. A manual adjustment is required only after the brake shoes have been relined or replaced. **The manual adjustment is performed while the drums are removed, using the tool and the procedure detailed below.**

When adjusting the rear brake shoes, check the parking brake cables for proper adjustment. Make sure that the equalizer operates freely.

To adjust the brake shoes:

1. Use Rotunda Tool HRE 8650, (Fig. 2) and adjust to the inside diameter of the drum braking surface.
2. Reverse the tool as shown in Fig. 3 and adjust the brake shoes to touch the gauge. **The gauge contact points on the shoes (Fig. 3) must be parallel to the vehicle with the center line through the center of the axle. Hold the automatic adjusting lever out of engagement while rotating the adjusting screw, to prevent burring the screw slots. Make sure the adjusting screw rotates freely. If necessary, lubricate the adjusting screw threads with a thin, uniform coating of C1AZ-19590-B Grease.**
3. Apply a small quantity of C1AZ-19590-B high temperature grease to the points where the shoes contact the carrier plate, being careful not to get the lubricant on the linings.
4. Install the drums. Install the retaining nuts and tighten securely.
5. Install the wheels on the drums and tighten the mounting nuts to specification.
6. Complete the adjustment by applying the brakes several times while backing the vehicle.
7. After the brake shoes have been properly adjusted, check the operation of the brakes by making several stops while operating in a forward direction.

FRONT BRAKE—P-500

The single anchor brake is adjusted by turning an adjusting screw located between the lower ends of the shoes.

1. Raise the vehicle until the wheels clear the floor.
2. Remove the cover from the adjusting hole at the bottom of the brake carrier plate, and turn adjusting screw inside the hole to expand the brake shoes until they drag against the brake drum and lock up the drum. Back off the adjusting screw until a slight drag is noted (Fig. 4).
3. When the shoes are against the drum, back off the adjusting screw 10 to 12 notches so that the drum rotates freely without drag. If the

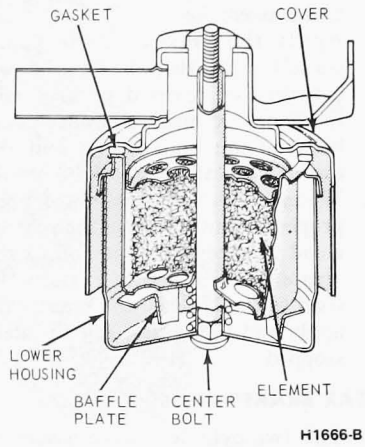

FIG. 1 Booster Air Filter—C-Series with Bendix Dual Diaphragm Booster

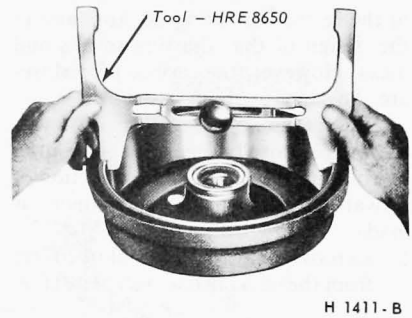

FIG. 2 Measuring Drum

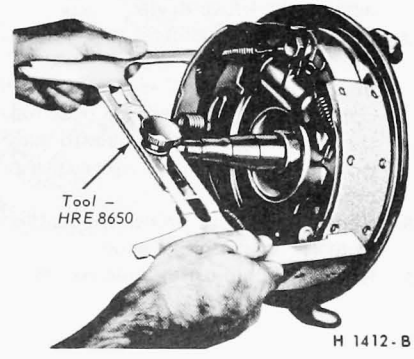

FIG. 3 Measuring Shoes

drum does not rotate freely, remove the wheel and drum, and then blow out the dust and dirt from the linings. With sandpaper, remove all rust from the points where the shoes contact the carrier plate and apply a light coating of grease (C1AZ-19590-B). Be careful not to get the lubricant on the linings.

4. Install the wheel and drum, and adjust the shoes. Install the adjusting hole cover on the brake backing (carrier) plate.
5. Check and adjust the other three brake assemblies.
6. Apply the brakes. If the pedal travels more than halfway down between the released position and the floor, too much clearance exists between the brake shoes and the drums. Repeat steps 2 and 3 above.
7. When all brake shoes have been properly adjusted, lower the vehicle. Road test the vehicle and check the operation of the brakes. Perform the road test only when the brakes will apply and the vehicle can be safely stopped.

REAR BRAKES—P-500

The two-cylinder brake assembly brake shoes are adjusted by turning adjusting wheels reached through slots in the backing (carrier) plate.

Two types of two-cylinder brake assemblies are used on truck rear wheels. The assemblies differ primarily in the retracting spring hookup, and in the design of the adjusting screws and locks. However, the service procedures are the same for both assemblies.

The brake adjustment is made with the vehicle raised. Check the brake drag by rotating the drum in the direction of forward rotation as the adjustment is made.

1. Remove the adjusting slot covers from the backing (carrier) plate (Fig. 5).
2. Turn the rear (secondary shoe) adjusting screw inside the hole to expand the brake shoe until it drags against the brake drum.
3. Back off the adjusting screw so that the drum rotates freely without drag. Depress the brake pedal to center the brake shoes, and back off the adjusting screw an additional notch to provide operating clearance.
4. Repeat the above procedure on the front (primary) brake shoe.
5. Replace the adjusting hole covers.

SELF ADJUSTING BRAKES—REAR—500-900 SERIES (EXCEPT P-500)

The brake shoes are automatically adjusted when the vehicle is driven in reverse and the brakes applied. A manual adjustment is required only after the brake shoes have been relined or replaced.

The two-cylinder brake assembly (Figs. 6 and 7) brake shoes are adjusted by turning adjusting wheels reached through slots in the backing plate.

Two types of two-cylinder brake assemblies are used on truck rear wheels. The assemblies differ primarily in the retracting spring hookup, and in the design of the adjusting screws and locks. However, the service procedures are the same for both assemblies.

The brake adjustment is made with the vehicle raised. Check the brake drag by rotating the drum in the direction of forward rotation as the adjustment is made.

1. Remove the adjusting slot covers from the backing (carrier) plate (Fig. 5).
2. Turn the rear (secondary shoe) adjusting screw inside the hole to expand the brake shoe until a slight drag is felt against the brake drum.
3. Repeat the above procedure on the front (primary) brake shoe.
4. Replace the adjusting hole covers.
5. Complete the adjustment by applying the brakes several times while backing the vehicle.
6. After the brake shoes have been properly adjusted, check the operation of the brakes by making several stops while operating in a forward direction.

SELF ADJUSTING BRAKES—TWO-CYLINDER FRONT 600-900 SERIES

Two-cylinder front brakes are adjusted by means of exposed, hex-head, self-locking cam adjusters. The brakes are to be manually adjusted initially. Subsequent adjustment is automatic. To adjust this brake:

1. Raise the vehicle and check the front brakes for drag by rotating the wheels.
2. Adjust one shoe by rotating the wheel backward and forward while turning the cam hex-head with a wrench. Bring the shoe out to the drum until a light drag is felt. **Do not apply excessive force on the hex-head cam, as automatic adjuster parts can be damaged.** Back off the adjustment until the wheel turns freely. Adjust the other cam on the same wheel in the same manner.
3. Adjust the other front wheel brake using the procedure above.
4. Apply the brakes and recheck the adjustment.

SELF ADJUSTING BRAKES—ONE-CYLINDER FRONT 500-800 SERIES (EXCEPT P-500)

The brake shoes are automatically adjusted when the vehicle is driven in reverse and the brakes applied. A manual adjustment is required only after the brake shoes have been relined or replaced.

1. With the vehicle raised, check the front brakes for drag by rotating the wheels.

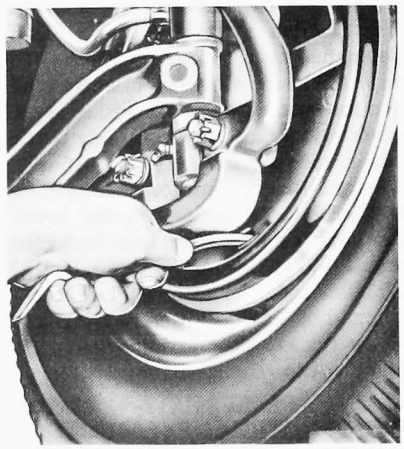

H1006-B

FIG. 4 Single Anchor Brake Shoe Adjustment

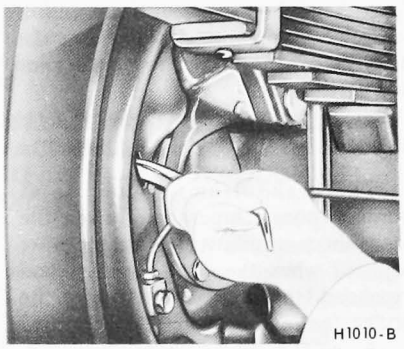

H1010-B

FIG. 5 Two-Cylinder Brake (Rear) Shoe Adjustment

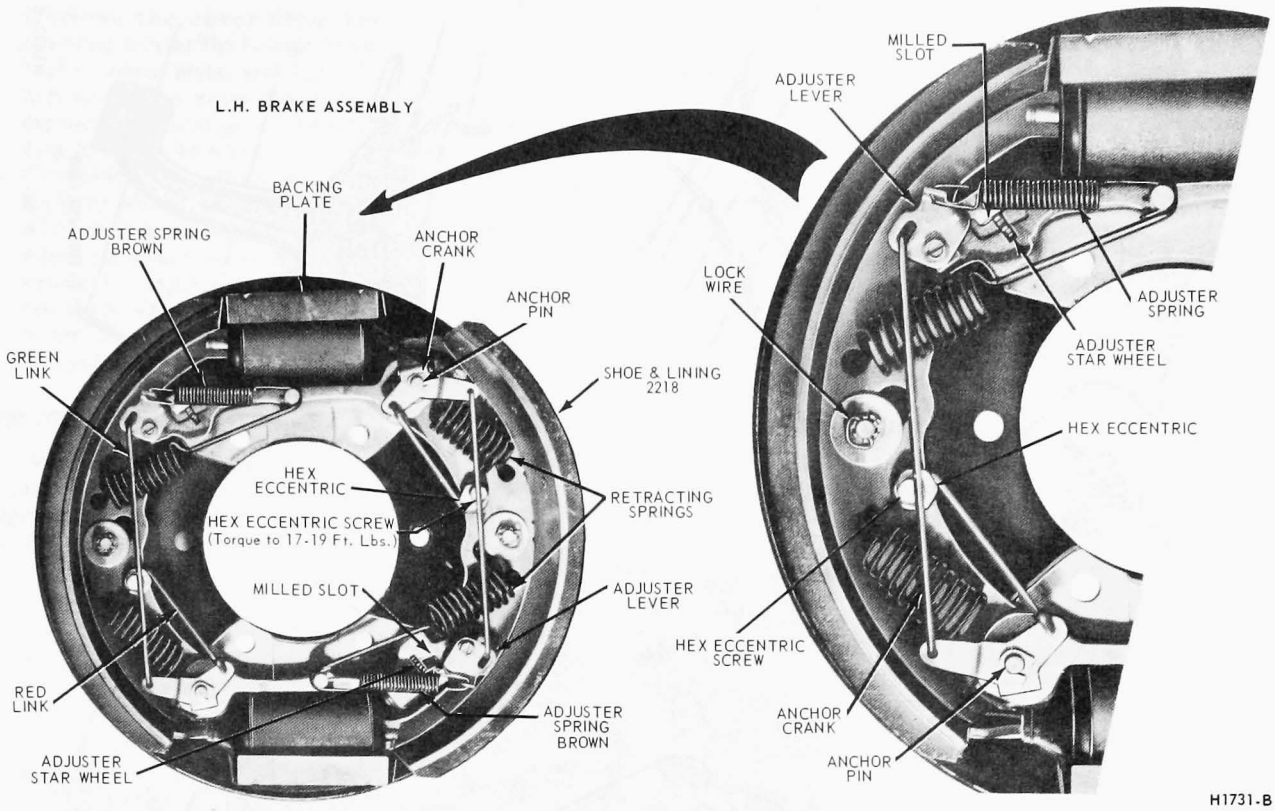

FIG. 6 Two-Cylinder Brake Shoe—Rear (Wagner)

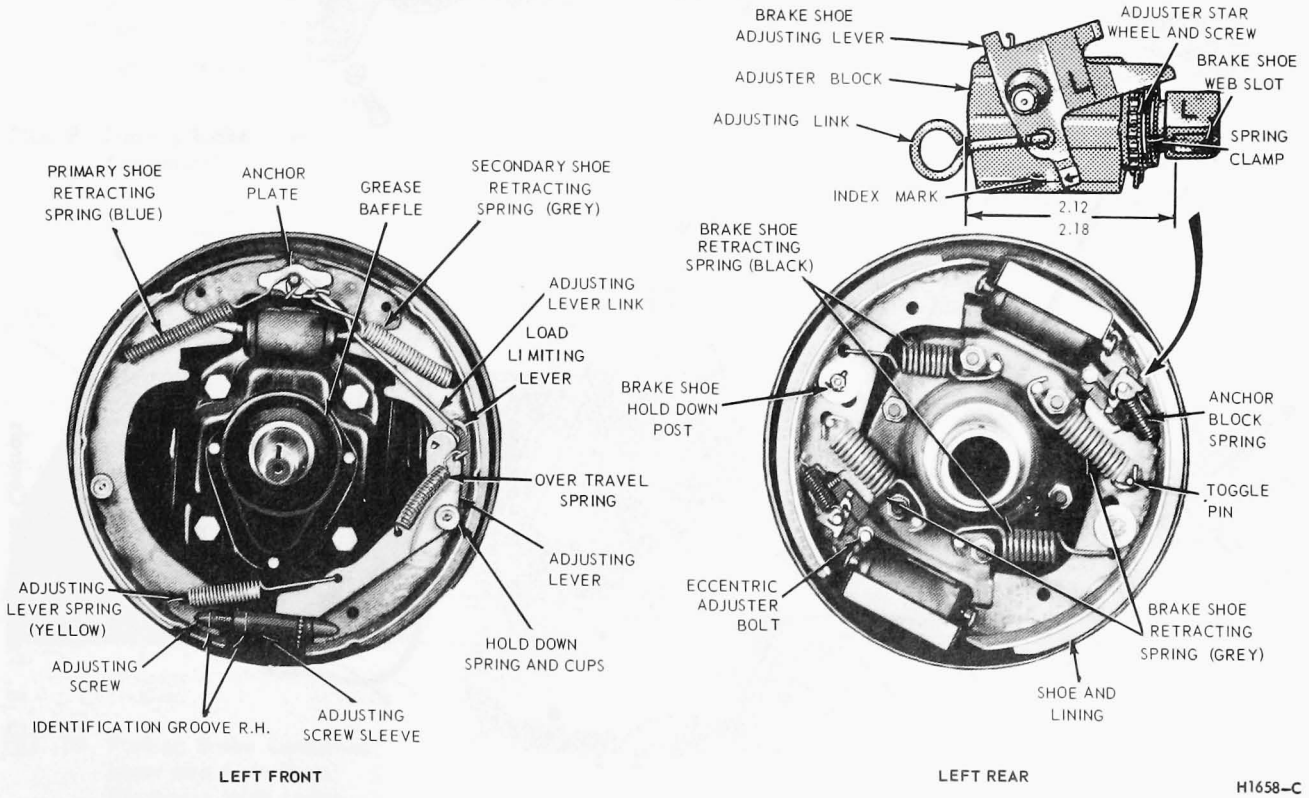

FIG. 7 Kelsey Hayes Hydraulic Brake Assemblies—Front and Rear

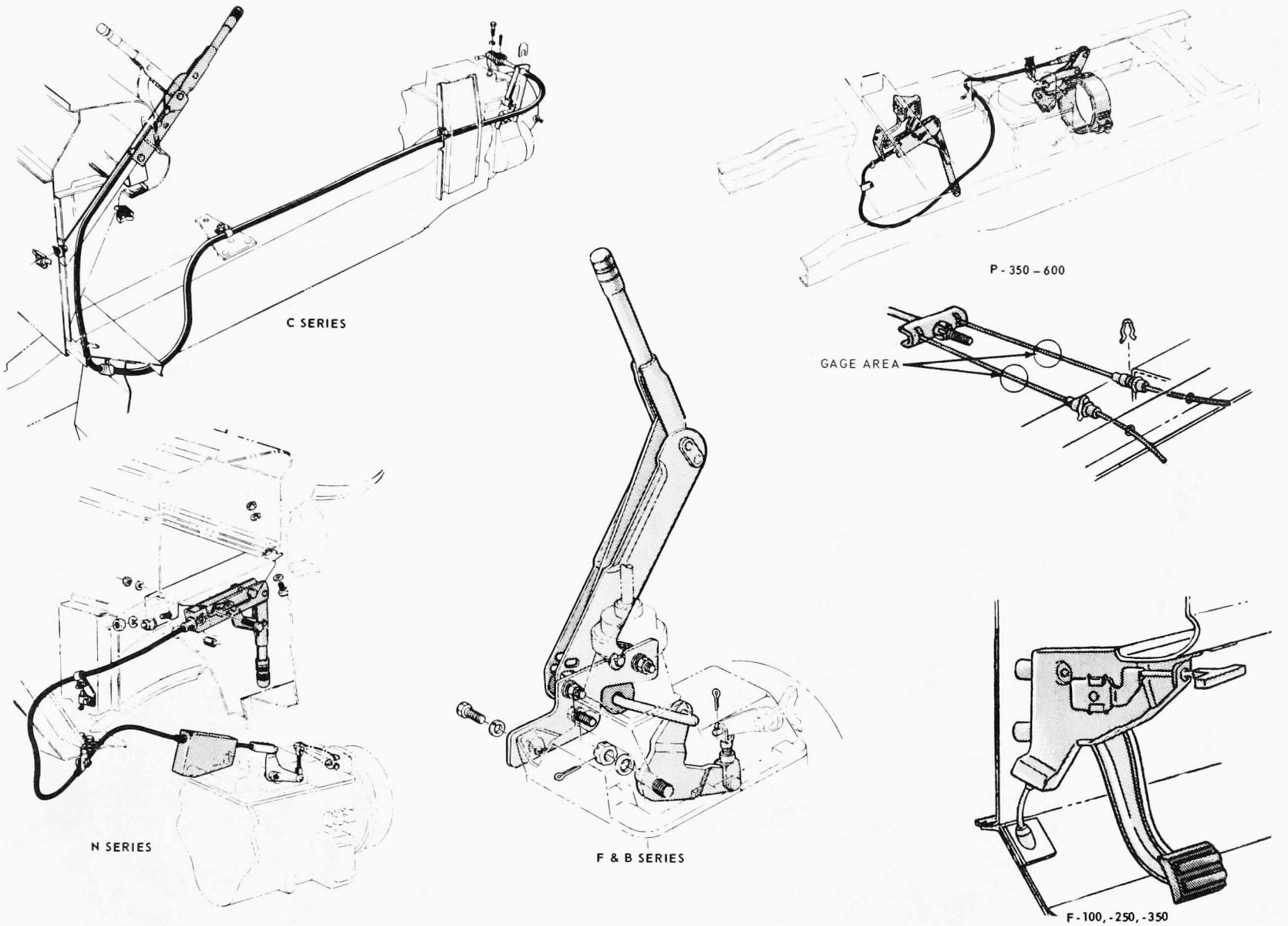

FIG. 8 Parking Brake Controls

2. Remove the cover from the adjusting hole at the bottom of the brake carrier plate, and turn the adjusting screw inside the hole to expand the brake shoes until a slight drag is felt at the wheel.
3. Complete the adjustment by applying the brakes several times while backing the vehicle.
4. After the brake shoes have been properly adjusted, check the operation of the brakes by making several stops while operating in a forward direction.

AIR BRAKES—ADJUSTMENT

Wedge-type air brakes are self adjusting. For service of automatic adjuster assemblies refer to Group 12 of the 1973 Truck Shop Manual.

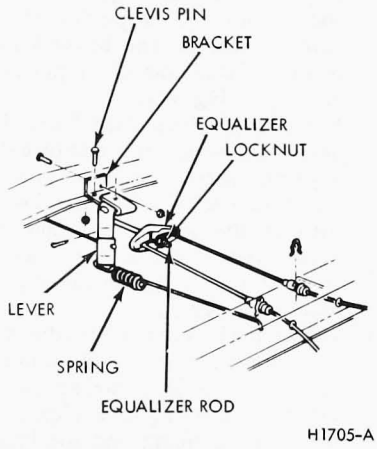

FIG. 9 Parking Brake Cable Adjustment

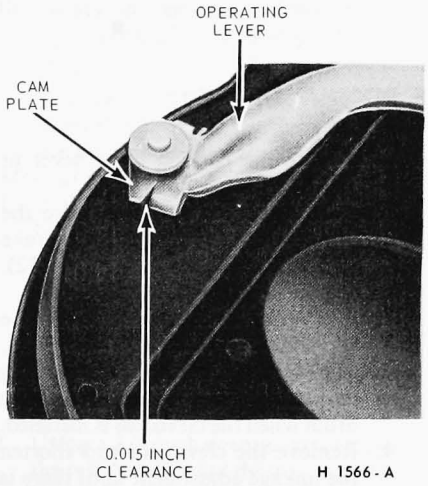

FIG. 10 Parking Brake Operating Lever and Cam Plate Clearance Web Ledge Brakes

Check wedge-type air brake shoe running clearance by inserting feeler gauge between shoe and drum at access hole.

Bendix.....0.040 inch
Rockwell.....0.060 inch

A preliminary adjustment can be made by rotating the wheels in a forward direction and applying air to the brake chambers 25 to 30 times.

Check cam-type air brake slack adjuster travel and adjust if necessary (see Specifications).

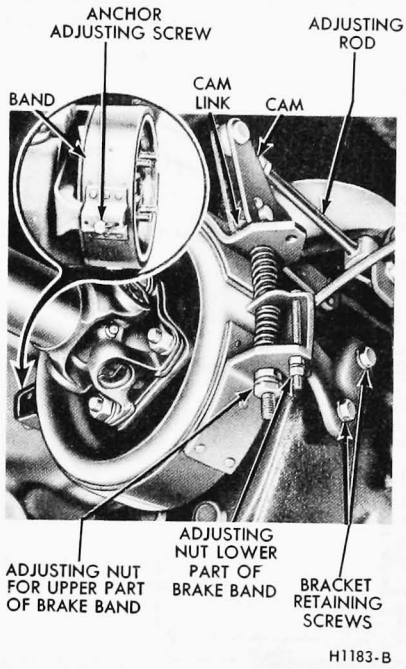

FIG. 11 External Band Type Parking Brake

AIR BRAKE SERVICE

For air brake chamber service procedures, refer to the following parts of the 1973 Truck Shop Manual (Volume 1, Group 12—Brakes):

PARKING BRAKE ADJUSTMENT

VEHICLES EQUIPPED WITH ORSCHELN LEVER

The Orscheln parking brake (Fig. 8) is the over center locking type. It is adjusted (while in the released position) by turning the lever knob. When properly adjusted, it pulls over center with a distinct click. No other adjustment is normally required.

CABLE ACTUATED TYPE

Adjust the service brakes before attempting to adjust the parking brake cables.

Place the parking brake lever in the fully released position, then check for slack in the parking brake two rear cables (Fig. 9).

The cables should be tight enough to provide full application of the rear brake shoes, when the parking brake lever or foot pedal is placed in the fully applied position, yet loose enough to ensure complete release of the brake shoes when the lever is in the released position.

If the cables are loose, adjust them as follows:

1. Set the parking brake control handle (if applicable) in the fully applied position. On F-100, F-250, F-350 and Bronco models, set the foot pedal at two notches or clicks.
2. Attach a brake cable tension gauge to the brake cables behind the equalizer as indicated in Fig. 8.

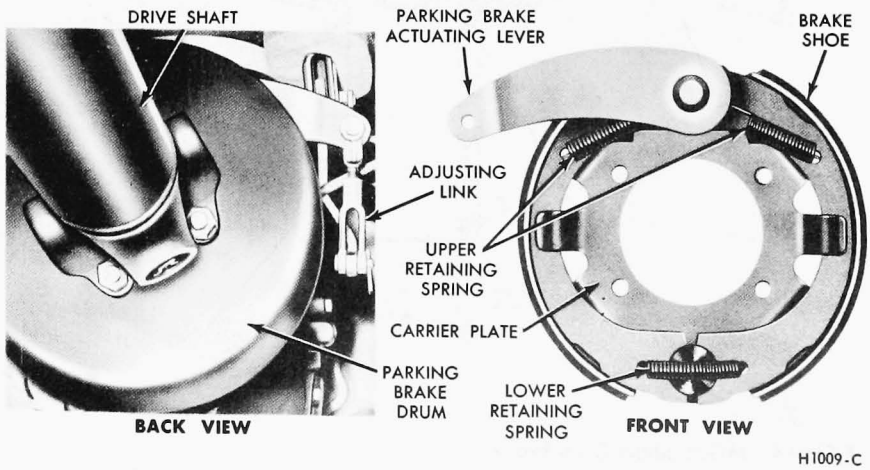

FIG. 12 Transmission Mounted Internal Shoe Type Parking Brake—9 Inch

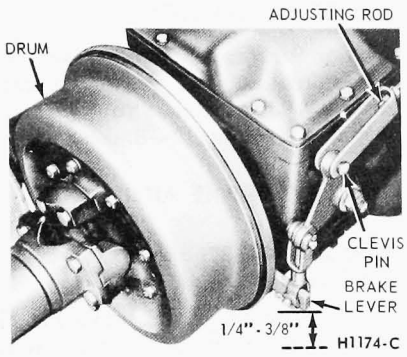

FIG. 13 Shoe-Type Parking Brake—Twelve Inch Drum

3. Loosen the lock nut and tighten the adjusting nut against the equalizer until the specified cable tension is obtained. Release and reset the cable tension gauge to make certain the specified cable tension has been obtained (see Specifications).

The cable tensions **must** be taken on **both rear cables** on the E-100, E-200 and E-300 models and on the **left rear cable only** for F-100, F-250, F-350, and Bronco models.

4. When the cables are properly adjusted, tighten the lock nut against the equalizer.
5. If rear wheel brake drag is noted after adjustment on F-250, F-350, E-300, models equipped with web ledge brakes, the rear drums must be removed after the service and parking brakes have been adjusted. Check the clearance between the parking brake lever and the cam plate (Fig. 10). The clearance should be 0.015 inch with the brakes fully released. If the clearance is not within specifications, readjust the parking brake cable.

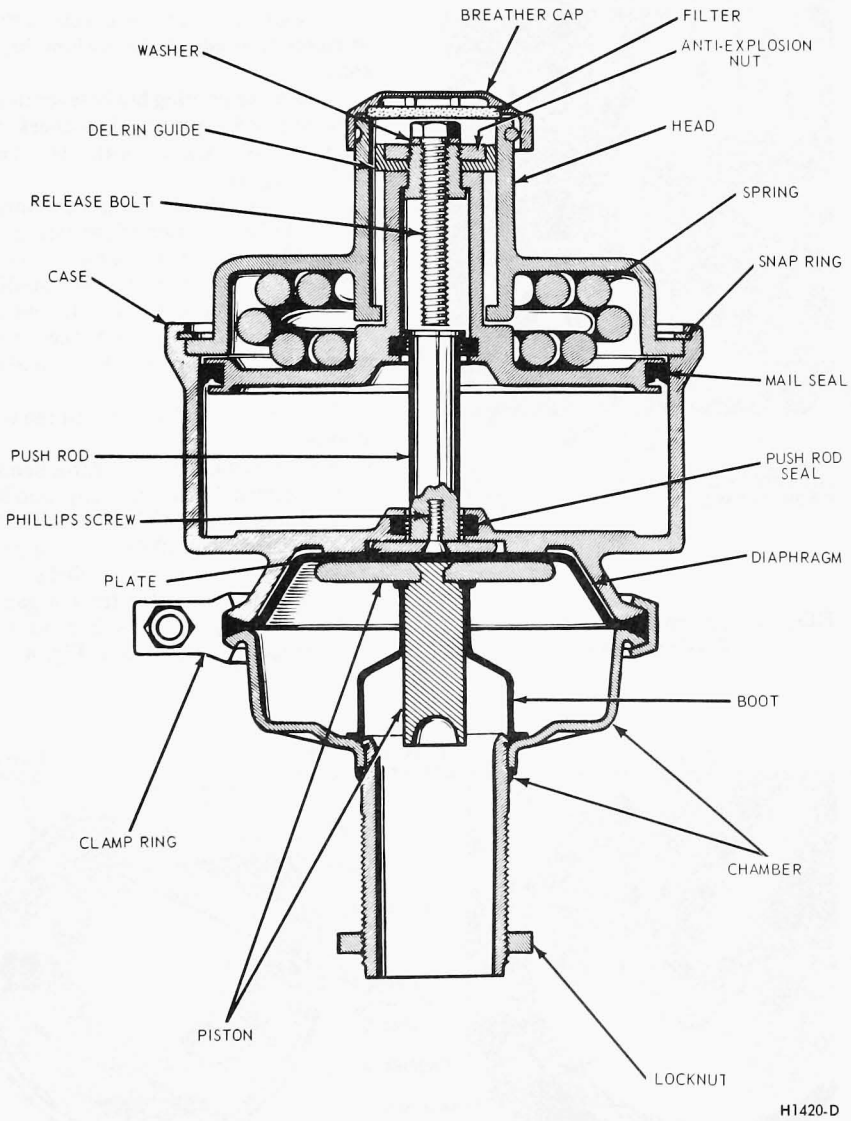

FIG. 14 MGM Short Stop Brake

EXTERNAL BAND TYPE

1. On cable-controlled parking brakes (Fig. 11), move the parking brake lever to the fully released position. On a vehicle with a rod-type linkage, set the lever at the first notch.
2. Check the position of the cam to make sure the flat portion is resting on the brake band bracket. If the cam is not flat with the bracket, remove the clevis pin from the upper part of the cam, and adjust the clevis rod to allow the flat portion of the cam to rest on the brake band bracket. Install the clevis pin and cotter pin (Fig. 11).
3. Remove the lock wire from the anchor adjusting screw, and turn the adjusting screw clockwise until a clearance of 0.010 inch is established between the brake lining and the brake drum at the anchor bracket. Install the lock wire in the anchor adjusting screw.
4. Loosen the lock nut on the adjusting screw for the lower half of the brake band, and adjust the screw to establish a 0.010 inch clearance between the lining and the brake drum at the lower half of the brake band (Fig. 11). Tighten the lock nut.
5. Turn the upper band adjusting rod nut until a 0.010 inch clearance is established between the upper half of the band and the drum.

INTERNAL SHOE TYPE

Nine-Inch Diameter Drum

1. Release the parking brake lever in the cab.
2. From under the truck, remove the cotter pin from the parking brake linkage adjusting clevis pin (Fig. 12). Remove the clevis pin.
3. Lengthen the parking brake adjusting link by turning the clevis. Continue to lengthen the adjusting link until the shoes seat against the drum when the clevis pin is installed.
4. Remove the clevis pin and shorten the linkage adjustment until there is 0.010 inch clearance between the shoes and the drum. The measurement should be taken at all

points around the drum with the clevis pin installed.
5. Install a new cotter pin in the clevis retaining pin and check the brake operation.

Twelve-Inch Diameter Drum

There is no internal adjustment on this brake. Adjustment is made on the linkage. Remove the clevis pin, loosen the nuts on the adjusting rod, and turn the clevis on the rod until a 1/4-3/8 inch free play is obtained at the brake lever (Fig. 13). Tighten the nuts, and connect the clevis to the bellcrank with the clevis pin.

SPRING BRAKE MANUAL RELEASE

MGM SHORT STOP

If air pressure fails in the Shortstop piston chamber, the power spring applies the brakes, and, unless pressure can be re-established, the brakes must be released as follows in order to move the truck:

1. (See Fig. 14) Remove the bolt and nut holding the cap and filter to the housing and remove the cap and filter.
2. Using a 9/16 inch deep-socket wrench, unscrew the release bolt until it turns freely. The brake shoe pressure is now released. Follow this procedure until all Shortstop units are released.
3. When air pressure has been restored, screw the release bolt in until the lock washer holds it securely. This MUST be done to regain Shortstop protection.

MGM LOW-PROFILE

Manual Release

1. Block the wheels to prevent vehicle from moving.
2. Using a 3/4 inch deep socket, unscrew the release bolt (Fig. 15) approximately 1 3/4 inches. **Do not use an air impact wrench.**

Manual Reset

1. If the breather cover and filter are loose, make certain the four (4) notched holes in the breather cover are 180 degrees opposite the two (2) breather holes in the cylinder housing and that the breather cover is centered on the cylinder housing assembly. Tighten the breather cover retaining screws.
2. Using a 3/4 inch deep socket, screw the release bolt until the nut securely butts the flat washer against the breather cover. **Torque the drive nut 30-35 in-lbs. Do not overtorque the nut or use an air impact wrench since this will damage the assembly.**

MGM STOPGARD

1. TO RELEASE: Block the wheels to prevent the vehicle from moving.
2. Remove (unscrew) the breather cap.
3. Using a 15/16 inch wrench, unscrew the release bolt (Fig. 16) approximately 30 turns until the brake shoes release from the drum. If the release bolt binds, apply rust penetrant (COAZ-19A501-A) or equivalent and allow it to soak into the threads.
4. TO RESET: If the release bolt threads are dry, coat the bolt with chassis lubricant. Screw the release bolt down into the unit until the nut bottoms against the case. Torque the nut to 50 ft-lbs.

MAXIBRAKE MANUAL RELEASE

1. Disconnect air hoses from spring brake port of the chamber (Fig. 17).
2. Install Schrader valves in chambers.

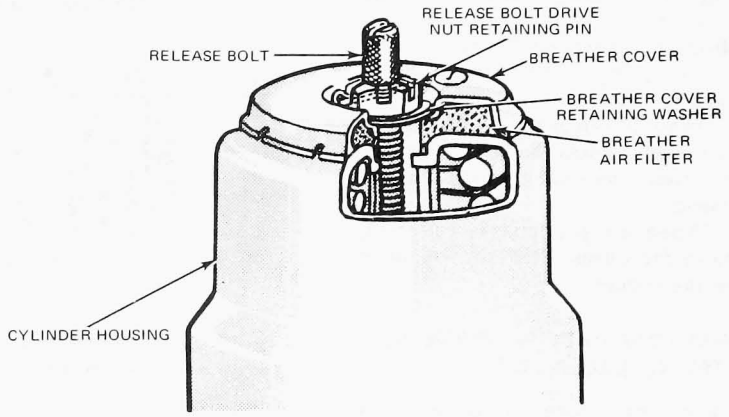

FIG. 15 MGM Low-Profile Brake

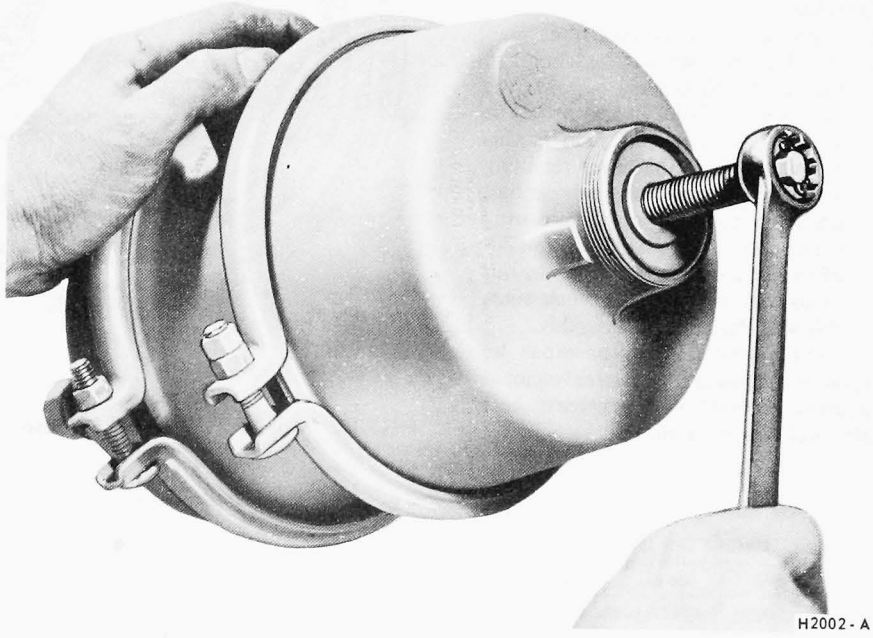

FIG. 16 MGM Stopgard Parking (Spring) Brake Manual Release

3. Charge chambers with air from outside source.
4. Remove Schrader valves and reconnect all lines.

ANCHORLOK SERVICE AND PARKING BRAKE

Remove the release stud tool and nut from the carrying pocket on the brake chamber assembly. Remove the access plug from the end of the spring chamber (Fig. 18). Insert the release stud through the opening in the chamber and into the spring pressure plate. Turn the release stud 1/4 turn to engage the stud tangs with the slot in the pressure plate. Keep the stud engaged and install the nut on the release stud until the spring is fully caged and the brakes are released.

Do not loosen or remove the release stud and nut unless the brake chamber is completely assembled and is securely clamped.

When air pressure is restored, remove the release stud and install in carrying pocket.

MGM LOW-PROFILE BRAKE AIR FILTER REPLACEMENT

1. Build up system air pressure to governor cut-out to insure full compression of the parking-emergency spring.
2. Using a 3/4 inch deep socket wrench, unscrew the release bolt approximately 1 inch.
3. Remove the breather cover retaining screw and remove the cover.
4. Remove breather filter by carefully stretching it over the cover.

Installation

1. Install a new or cleaned filter.
2. Position the four notched holes in the cover 180 degrees opposite the two breather holes in the top of the housing cylinder, and hold in this position. Install the cover retaining screw; then, install the release bolt until the nut and washer are snug against the cover. **Torque the nut 30-35 in-lbs. Do not overtorque the nut or use an air impact wrench since this will damage the assembly.**

The filter and cover must be replaced if damaged. Cover replacement requires removal of the release bolt drive nut retaining pin.

MGM SHORT STOP BRAKE AIR FILTER REPLACEMENT

Unscrew bolt and nut securing breather cap to chamber head. Remove breather cap and discard filter. Clean breather cap, install a new filter, and reassemble cap to chamber head.

BRAKE PEDAL FREE TRAVEL—HYDRAULIC BRAKES

On dual-brake master cylinder or dash-mounted vacuum booster equipped vehicles, the brake systems are designed to permit full stroke of the master cylinder when the brake pedal is fully depressed. A brake pedal clearance adjustment is not required.

In order to release the brakes, fluid in a hydraulic brake system must flow back to the master cylinder when pedal pressure is released. A port is provided in the master cylinder to allow this flow, but the piston must move back far enough to expose the return port. To be sure that this will always happen, free-travel is built into the pedal linkage on single master cylinders with non-power brakes or frame-mounted booster systems. This free-travel prevents the piston from becoming trapped in a partially released position. Pedal free travel is not always perceptible in dash-mounted booster systems, however, because the operating clearance for the piston is adjusted at the booster push rod, rather than the pedal linkage (Refer to Volume 1, Group 12 of the 1973 Truck Shop Manual for instructions on dash-mounted booster push rod adjustments).

Pedal free travel is not adjustable on 500-1000 Series trucks with a dash-mounted booster and a single or dual system or units with a dual system and a frame-mounted booster.

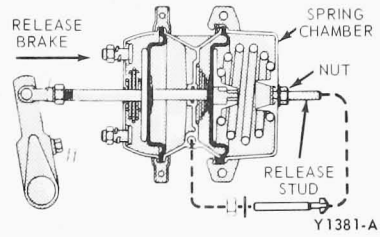

FIG. 18 Anchorlok Service and Parking Brake

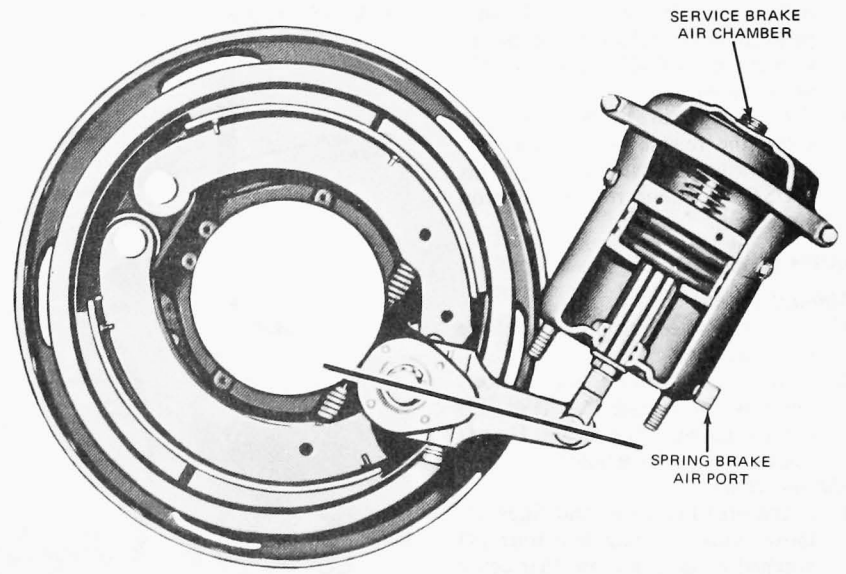

FIG. 17 Maxibrake Manual Release

SPECIFICATIONS

Refer to the 1973 Truck Shop Manual for any specifications or Special Tools not contained in this Section.

SPECIFIC TORQUE LIMITS

Front Brake Backing Plate to Spindle (100–400 Series)	1/2 x 13, 55-70	7/16 x 14, 30–50	1/2 x 20, 55–75
Front Brake Backing Plate and Steering Arm to Spindle (100–400 Series)	1/2 x 13, 30–40	1/2 x 20, 50–70	
Rear Backing Plate to Axle (100–400 Series)	1/2 x 13, 75–105	1/2 x 20, 50–70	7/16 x 14, 35–45
Brake Assembly to Front Axle (500–900 Series)	9/16 x 12, 110–150	1/2 x 13, 75–105	1/2 x 20, 75–105
Brake Assembly to Rear Axle (500–900 Series)	9/16 x 12, 110–150	1/2 x 13, 75–105	1/2 x 20, 75–105
Brake Drum to Hub Nuts or Bolts (500–900 Series)	1/2 x 13, 68–85	5/8 x 18, 136–170	
Master Cylinder or Booster Push Rod to Brake Pedal (500–900 Series)	3/8 x 16, 12–17		
Master Cylinder to Dash Panel (500–900 Series)	5/16 x 18, 12–17	3/8 x 16, 31–42	
Master Cylinder to Booster (Dash Mounted Booster) (500–700 Series)	14–18		
Booster to Dash Panel (Dash Mounted Booster) (500–700 Series)	3/8 x 16, 12–17	3/8 x 24, 13–20	5/16 x 18, 12–15
Master Cylinder to Pedal Bracket	5/16 x 24, 12–15	3/8 x 24, 12–17	
Eccentric Adjuster Bolt Torque	80–120 inch lbs.		

TORQUE LIMITS – HYDRAULIC TUBE NUTS (FT-LBS)

Thread Size	Ft-Lbs. ①	Thread Size	Ft-Lbs. ①
3/8–24	8–15	1/2–20	12–17
7/16–24	12–17	9/16–18	15–25

① All hydraulic line connections (nuts) must be torqued to the specified value and free of fluid leakage.

BRAKE DRUM REPAIR LIMITS (BRAKE LATHE)

Brake drums are marked with the maximum allowable braking surface diameter. If this diameter is exceeded by wear or refinishing, the drum must be replaced.

S-CAM BRAKE ADJUSTMENT TABLE

Brake Chamber Type	Maximum Stroke at Which Brake Should Be Adjusted ①	Maximum Stroke After Adjustment ①
Front – Type no. 9	1 3/8 inch	1.00 Inch
no. 12	1 3/8 Inch	1.00 Inch
no. 16	1 3/8 Inch	1.00 Inch
Rear – Type no. 24	1 3/4 Inch	1 1/4 Inch
no. 30	2.00 Inch	1 1/4 Inch

① Push rod stroke is measured from chamber or chamber mounting bracket to Push rod clevis.

AIR SUPPLY SYSTEM

Air Brake System Pressure Settings	
Safety Valve Setting (Air Pressure)	150 PSI
Warning Buzzer Operating Pressure	60 PSI or Less
Cut-Out Pressure (Governor)	118–126 PSI
Cut-In Pressure (Governor)	98–104 PSI

Torque Limits (Ft-Lbs)	
Air Brake Compressor Pulley Nut②	3/4, 40–45

② Advance nut to next cotter pin slot, if necessary, to Install Cotter Pin.

AIR BRAKE LINE TYPES

SAE J844 Type 3A – For 1/4 Inch

SAE J844 Type 3B – For 3/8, 1/2, 3/4 Inch

NYLON HOSE TUBE NUT TORQUE

Size	Torque	Size	Torque
7/16–24	85–115 In.Lbs.	11/16–20	12–17 Ft-Lbs.
17/32–24	12–17 Ft-Lbs.	1–18	20–29 Ft-Lbs.

PARKING BRAKE CABLE TENSION ADJUSTMENT

Model	Cable Tension ①	
	New ②	Used ③
F-100-250 (4 x 2)	160-200 lbs.	115-200 lbs.
F-250-350 with Web Ledge Brakes & F-250 4 x 4	80-120 lbs.	65-120 lbs.
E-100-200	285-325 lbs.	275-325 lbs.
E-300	210-250 lbs.	200-250 lbs.
Bronco	130-170 lbs.	115-155 lbs.

① With hand lever full on or with foot control pedal set at two notches or clicks.
② With new linings and/or new cable.
③ Whenever readjustment is required.

CH1753-C

PART 50-13 Steering

COMPONENT INDEX	Page
LUBRICATION	
Power Steering Reservoir Fluid Level	13-01
Steering Column U-Joints Lubrication	13-01
Steering Gear Lubricant Level Check	13-01
Steering Linkage Lubrication	13-01
Steering Shaft Slip Spline Lubrication	13-01
MAINTENANCE	
Belt Tension Adjustment – Power Steering Pump	13-08
Filter Replacement – Power Steering Pump Reservoir	13-08
Steering Gear Adjustments	13-03
Steering Stop Adjustment	13-03
Torque Checks	13-08
PRE-DELIVERY	
Power Steering Lines Check	13-01
Power Steering Reservoir Fluid Level Check	13-01
Steering Control and Power Steering Operation	13-01
Steering Mountings, Linkage and Connections Check	13-01
Steering Visual Check	13-01
SPECIFICATIONS	13-09

PRE-DELIVERY

VISUALLY CHECK STEERING

Inspect the steering for proper assembly and components. Check to assure that all lock tabs and cotter pins are properly installed.

STEERING CONTROL AND POWER STEERING

Check steering wheel return from both directions. Test for steering effort required and inconsistent effort in different directions. Check for harshness noise, wander or free play. Correct as required.

CHECK STEERING MOUNTINGS, LINKAGE AND CONNECTIONS

Check the steering gear attaching bolts to be sure they are tightened to specifications. Torque the attaching bolts to specifications if necessary.

Check the linkage for tightness and proper installation of cotter pins. correct as required.

CHECK POWER STEERING LINES

Check the linkage for tightness and proper installation of cotter pins. Correct as required.

CHECK POWER STEERING RESERVOIR FLUID LEVEL

Run the engine until the fluid is at normal operating temperature. Then turn the steering wheel all the way to the left and right several times. Make sure that the wheels are in the straight-ahead position, then shut off the engine.

Check the fluid level in the power steering reservoir on Ford-Thompson pumps. The level must show on the cross hatching between the bottom of the dipstick and the full mark. If the level is low, add fluid. Refer to the Lubricants Chart in Part 50-03 for the fluid specification number. **Do not overfill the reservoir.** Remove excess fluid with a suction device.

LUBRICATION

LUBRICATE STEERING LINKAGE

Apply the specified Chassis lubricant (Part 50-03) with a pressure gun at all fittings on the linkage.

LUBRICATE STEERING SHAFT SLIP SPLINE (W-SERIES)

Apply pressure gun grease to the grease fitting (Fig. 1) until the grease appears at the spline end. Refer to Part 50-03, Lubricants Chart, for the recommended lubricant.

LUBRICATE STEERING COLUMN U-JOINTS (C-, LN-AND W-SERIES)

Apply Ford Chassis Lubricant to the U-joint fittings, using a pressure gun. Refer to Part 50-03 for lubricant specifications.

CHECK STEERING GEAR LUBRICANT LEVEL

F-100, F-250 AND 350 (4 X 2) SERIES MANUAL STEERING

1. Center the steering wheel.
2. Remove the steering gear housing filler plug.
3. Remove the lower cover-to-housing attaching bolt.
4. With a clean punch or like instrument, clean out or push the loose lubricant in the filler plug hole and cover-to-housing attaching bolt hole inward.
5. Slowly turn the steering wheel to the left until linkage reaches stop. Lubricant should rise within the cover lower bolt hole; then slowly turn the steering wheel to the right until linkage reaches stop. Lubricant should rise within the filler plug hole. If lubricant does not rise in both the cover bolt hole and the filler plug hole, add specified lubricant until it comes out both holes during this check.
6. Install the lower cover-to-housing attaching bolt and the filler plug.

ECONOLINE

1. Remove the steering gear housing filler plug.
2. With a clean punch or like instrument, clean out or push the loose lubricant into the filler plug hole. Turn the steering wheel to the **left.** Then turn the steering wheel slowly to the **right** until linkage reaches stop. Lubricant should rise in the filler plug hole. If lubricant does not rise in the filler plug hole, add specified lubricant.

The location of the steering gear does not allow clearance for the removal of a cover bolt for creating a vent. To prevent air from being trapped and forming pockets in the housing while lubricant is being added, it is suggested that a curved length of 1/4 inch tubing be adapted to the end of the grease gun being used. This tube should be inserted into the filler hole and extend down toward the bottom of the housing cavity. By this method, the lower housing cavity will fill first and as lubricant is added, air will be expelled upward and out the filler hole.

To add lubricant, turn the steering wheel to the extreme **left** to position the ball nut away from the filler plug hole and fill gear by method described above until lubricant rises in the filler plug hole.

F-100 4-WHEEL DRIVE AND BRONCO

1. Remove the filler plug from the sector shaft cover.
2. Check to see if the lubricant level is visible in the filler plug-tower. If the lubricant is visible, install the filler plug. If the lubricant is not visible, add specified lubricant (Part 50-03) as outlined in Step 3.

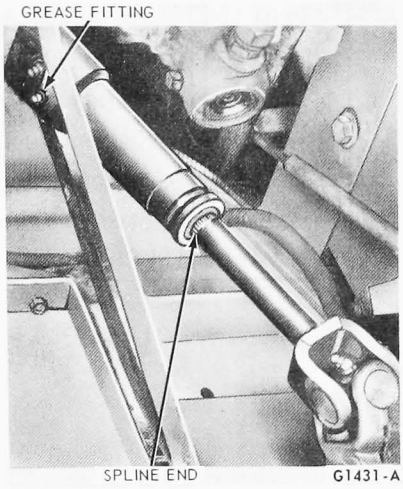

FIG. 1 Steering Shaft Slip Spline—W-Series

3. Add steering gear lubricant until the lubricant level is visible approximately 1 inch from the top of the hole in the filler plug tower; then, install the filler plug.

500 THRU 900 SERIES, F-250 (4 X 4) AND P-SERIES WITH MANUAL STEERING

1. Remove the filler plug from the top of the steering gear housing.
2. Check the lubricant level. If the level is to the bottom of the filler plug opening, install the filler plug. If the level is not to the bottom of the filler plug hole, add fluid to raise the level to that level. **Do not use a pressure gun as it could damage the seals in the gear.**

ROSS SEMI-INTEGRAL POWER STEERING GEAR—W-SERIES

1. Remove the upper most filler plug from the gear housing.
2. Install a 90 degree, 3/8 inch street pipe elbow in the filler plug hole of the gear as shown in Fig. 2.
3. Add specified lubricant (Part 50-03) into the open end of the elbow until the lubricant is visible.
4. Install the plug, removed in step 1, in the street elbow.

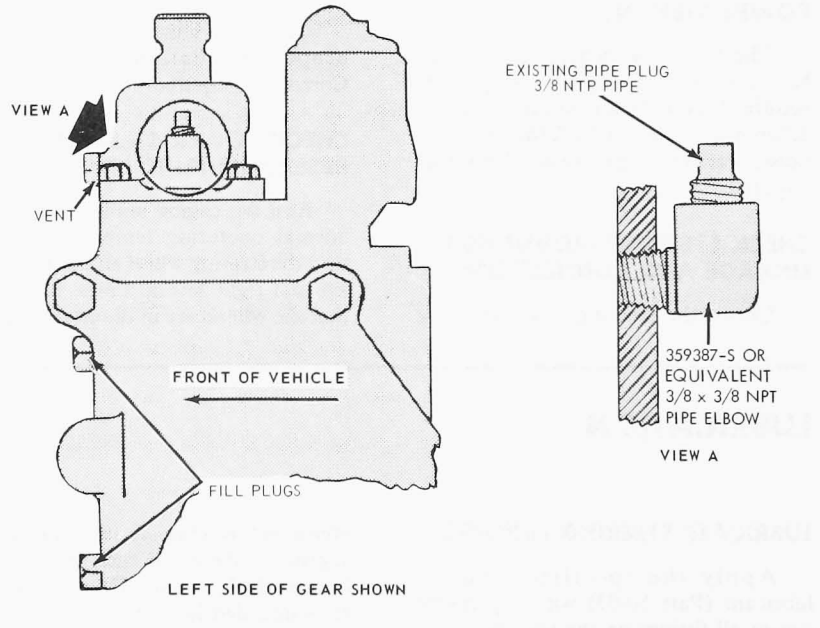

FIG. 2 Ross HPS-70 Steering Gear Lubricant Fill—W-Series

MAINTENANCE

CHECK STEERING STOP ADJUSTMENTS

TWIN-I-BEAM AXLE

The steering stops are not adjustable on Twin-I-Beam front axles.

ALL EXCEPT TWIN-I-BEAM AXLES

To avoid tire and/or steering linkage damage, the steering stop adjustments should be checked periodically, and adjusted if necessary.

Fig. 3 shows the position of the front wheels when checking the stop adjustment angles shown in the specification charts at the end of this Part.

Manual, Integral or Semi-Integral Power Steering Gear

The following spindle stop adjustment is the only one required:

1. Raise the front of the vehicle until the wheels clear the floor.
2. Set spindle stop bolts to obtain specified angle.

Linkage Type Power Steering Gear

1. Raise both front wheels off the ground by jacking under the axle.
2. Screw both Pitman arm stop bolts (Fig. 4) away from the Pitman arm to prevent contact with the Pitman arm prior to the spindle stops contacting the axle.
3. Start the engine and adjust each spindle stop to obtain the specified turn angle.
4. When the wheel is at each stop, screw the Pitman arm stop bolt in to contact the Pitman arm.
5. Return the wheels to straight-ahead position, then turn each Pitman arm stop bolt two turns toward the Pitman arm. Tighten each Pitman arm stop bolt lock nut.

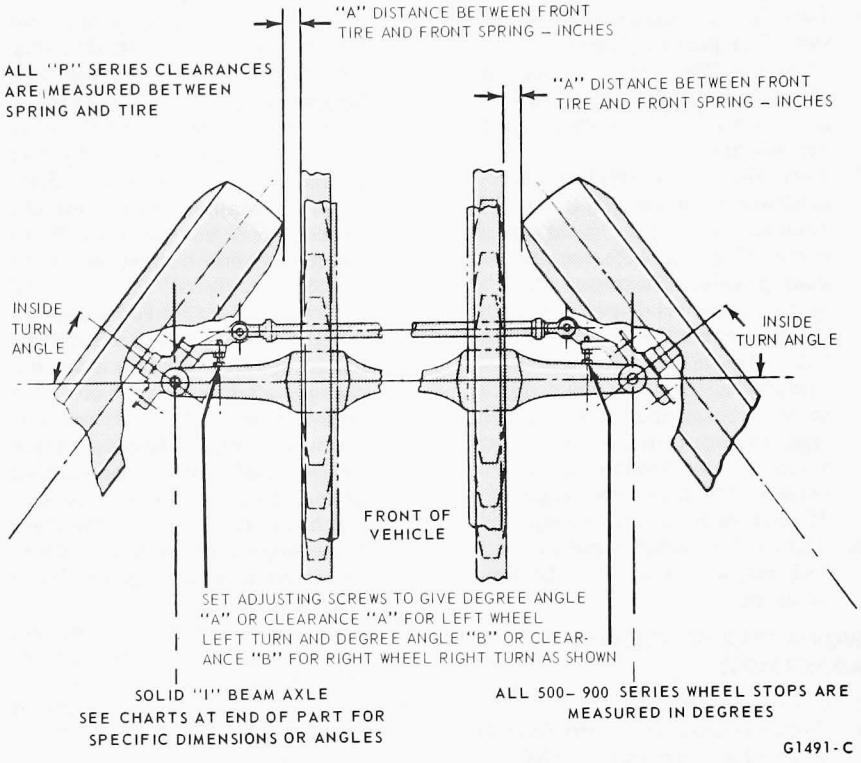

FIG. 3 Spindle Arm Stop Adjustment—All Except Twin-I-Beam Vehicles

STEERING GEAR ADJUSTMENTS

WORM BEARING PRELOAD ADJUSTMENT—F-100-350 (4 X 2)

Correctly adjusted worm bearing preload will help to eliminate excessive steering shaft and worm end play. **Always check the worn bearing preload before checking and adjusting the worm and roller mesh. The worm and roller mesh should always be checked and adjusted after checking and adjusting the worm bearing preload.**

1. Remove the Pitman arm from the steering gear sector shaft.
2. Disconnect the horn wire at the horn relay. Remove the horn button and spring from the steering wheel.
3. Turn the steering wheel to the end of its travel.
4. Place an in-lb torque wrench on the steering wheel nut (Fig. 5). Measure the lowest torque required to turn the wheel at a constant speed. The lowest torque reading is the worm bearing preload. If the torque (preload) is not within specification adjust as described in step 5.
5. Loosen the steering shaft bearing adjuster lock nut and tighten or loosen the bearing adjuster (Fig. 6) to bring the preload to specifications. Tighten the steering shaft bearing adjuster lock nut and recheck the preload.

STEERING WORM AND SECTOR GEAR ADJUSTMENT—ECONOLINE

The steering gear must be removed from the vehicle to properly make a preload and mesh load adjustment. Therefore, it should be determined that the steering column is aligned properly and not causing excessive turning effort before attempting to adjust the gear.

The ball nut assembly and the sector gear must be adjusted properly to maintain minimum steering shaft end play (a factor of preload adjustment) and minimum backlash between sector gear and ball nut. There are only two possible adjustments within the recirculating ball-type steering gear, and **these should be made in the following order to avoid damage or gear failure.**

1. Loosen the nut which locks the sector shaft adjusting screw (Fig. 7) and turn the adjusting screw counterclockwise approximately three turns.
2. Measure the worm bearing preload by attaching an in-lb torque wrench to the input shaft (Fig. 8). Read the torque required to rotate the input shaft approximately 1 1/2 turns either side of center. If the torque or preload is not within specifications, adjust the steering gear as explained in the next step.

3. Loosen the worm bearing adjuster lock nut, and tighten or back off the bearing adjuster (Fig. 7) to bring the preload within the specified limits. Tighten the lock nut and recheck the preload.
4. Turn the input shaft slowly to either stop. **Turn gently against the stop to avoid possible damage to the ball return guides.** Then rotate the shaft approximately three turns to center the ball nut.
5. Turn the sector adjusting screw clockwise until the specified pull is obtained to rotate the worm past its center (Fig. 8). With the steering gear position on center and the sector shaft retained to prevent rotation, check the lash between the ball nuts, balls and worm shaft by applying a 15 in-lb torque on the steering gear input shaft, in both right and left turn directions. Total travel of the wrench should not exceed 1 1/4 inches when applying a 15 in-lb torque on the steering shaft.
6. Tighten the sector adjusting screw lock nut, and recheck the backlash adjustment.

WORM BEARING PRELOAD ADJUSTMENT

F-100 4-Wheel Drive

1. Disconnect the Pitman arm from the sector shaft with T64P-3590-F.
2. Disconnect the wire socket at the horn relay. Remove the horn button and spring.
3. Turn the steering wheel to the end of its travel in either direction.
4. Place an in-lb torque wrench on the steering wheel retaining nut, and measure the torque required to keep the wheel moving at a constant rate for approximately 1/4 to 1/2 turn. If the torque, or preload is not within specifications, remove or add gasket shims between the worm shaft bearing retainer cover and the steering gear housing (Fig. 9) to adjust the worm bearing preload to specification. Install the cover and torque the attaching bolts to specification. Then, recheck the worm preload to be sure it has not changed after the cover bolts have been tightened. **If erratic readings are experienced, disconnect the steering shaft joint at the steering gear. Then, check the torque required to rotate the steering shaft. If the torque is measurable, add it to the worm bearing preload specification.**
5. After adjusting the worm preload, turn the gear to the other end of its travel and recheck the preload.
6. Check the steering gear lubricant level and add lubricant as necessary (Part 50-03).

Bronco

1. Remove the steering gear as described in Group 13 of the 1973 Truck Shop Manual.
2. Loosen the mesh and roller adjusting lock nut. Back off adjusting screw 2-3 turns.
3. Place an in-lb torque wrench on the input shaft. Check the torque required to rotate the input shaft 1 1/2 turns either side of center. If the torque or preload is not within specifications, remove or add gasket shims between the worm shaft bearing retainer cover and the steering gear housing (Fig. 9) to adjust the worm bearing preload to specification.
4. Tighten the mesh and roller adjusting screw 2-3 turns and perform the worm and roller mesh adjustment.

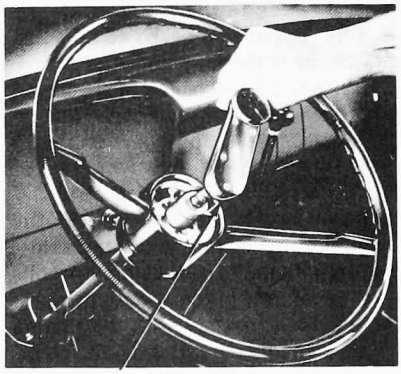

Inch-Pounds Torque Wrench

G1564-A

FIG. 5 Checking Steering Gear Preload

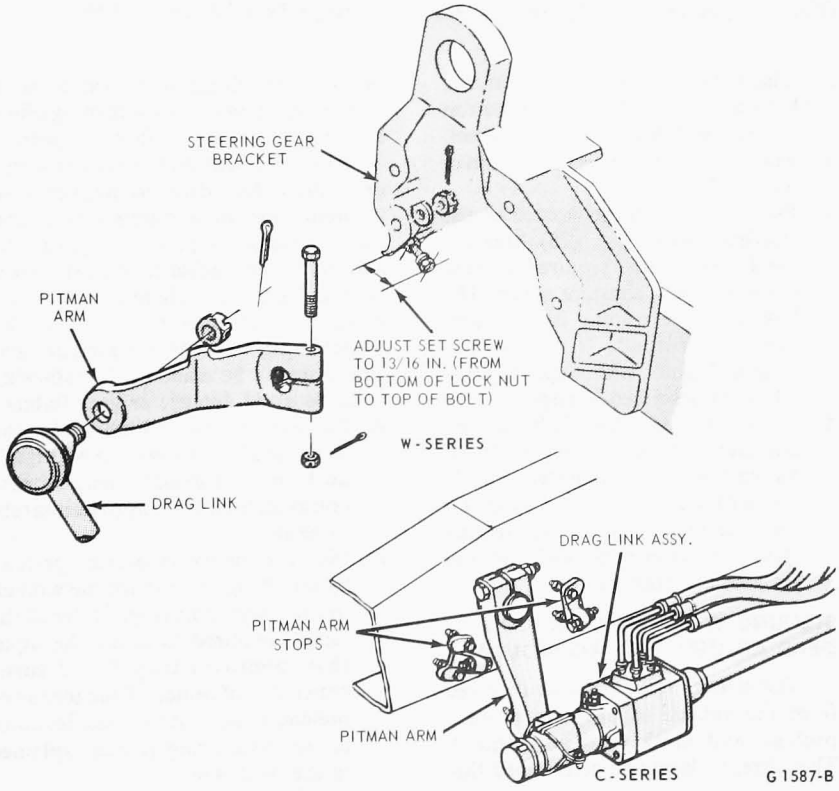

FIG. 4 Pitman Arm Stops—W-and C-Series

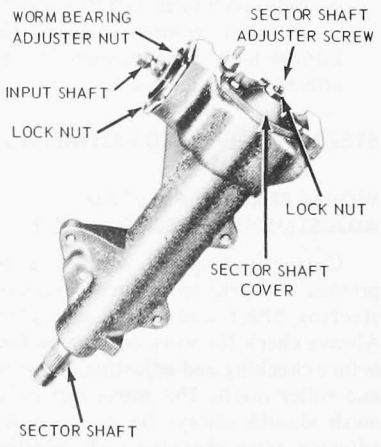

G1563-A

FIG. 6 Manual Steering Gear—Recirculating Ball—F-100 thru F-350 (2-Wheel Drive)

5. Install the steering gear as described in the 1973 Truck Shop Manual.
6. Check the steering gear lubricant level and add lubricant as necessary (Part 50-03).

F-BL-W-C-500-9000

1. Remove the steering gear from the vehicle. Refer to Group 13 of the 1973 Truck Shop Manual.
2. Place a 12 point, 13/16 inch socket on the lower steering shaft serrations. Attach an in-lb torque wrench to the socket and turn the steering gear at a constant speed. The lowest torque required is the worm bearing preload. If the torque is not within specification, make the adjustment as outlined in step 3.
3. To adjust the worm bearing preload, remove or add gasket shims between the worm shaft bearing retainer (Fig. 10) to bring the worm bearing preload to the proper specifications. Install the cover and torque to specifications.
4. Adjust the worm and roller mesh preload.
5. Install the steering gear in the vehicle.

WORM AND ROLLER MESH ADJUSTMENT

All Except F-100-350 (4 x 2) and Econoline (Manual Steering)

The worm bearing preload should always be checked and adjusted, if necessary, before the worm and roller mesh is checked and adjusted.

1. Remove the steering gear from the vehicle.
2. Place an in-lb torque wrench on the steering gear input shaft (Fig. 11). Measure the torque required to turn the steering wheel through the straight-ahead (high point) position. The highest torque reading is the worm and roller mesh preload. If the preload is not within specification adjust as outlined in steps 3 through 5.
3. To adjust the mesh, loosen the adjusting screw lock nut on the side of the steering gear housing and adjust the worm and roller mesh, or by turning it outward (counterclockwise) to loosen the mesh.
4. After adjusting the mesh, hold the adjusting screw stationary with a screwdriver and tighten the lock nut.
5. Recheck the mesh adjustment. If the mesh is still not correct, repeat the adjustment procedure.
6. Install the steering gear and fill it to the correct level with the specified lubricant.

FORD INTEGRAL POWER STEERING GEAR ADJUSTMENT

The only adjustment which can be performed is the total over center position load, to eliminate excessive lash between the sector and rack teeth.

1. Disconnect the Pitman arm from the sector shaft.
2. Disconnect the fluid return line at the reservoir, at the same time cap the reservoir return line pipe.
3. Place the end of the return line in a clean container and cycle the steering wheel in both directions as required, to discharge the fluid from the gear.
4. Turn the steering wheel to 45 degrees from the left stop.
5. Using an in-lb torque wrench on the steering wheel nut, determine the torque required to rotate the shaft slowly through an approximately 1/8 turn from the 45 degree position.
6. Turn the steering gear back to center, then determine the torque required to rotate the shaft back and forth across the center position. Loosen the adjuster nut, and turn the adjuster screw (Fig. 12) until the reading is 11-12 in-lb greater than

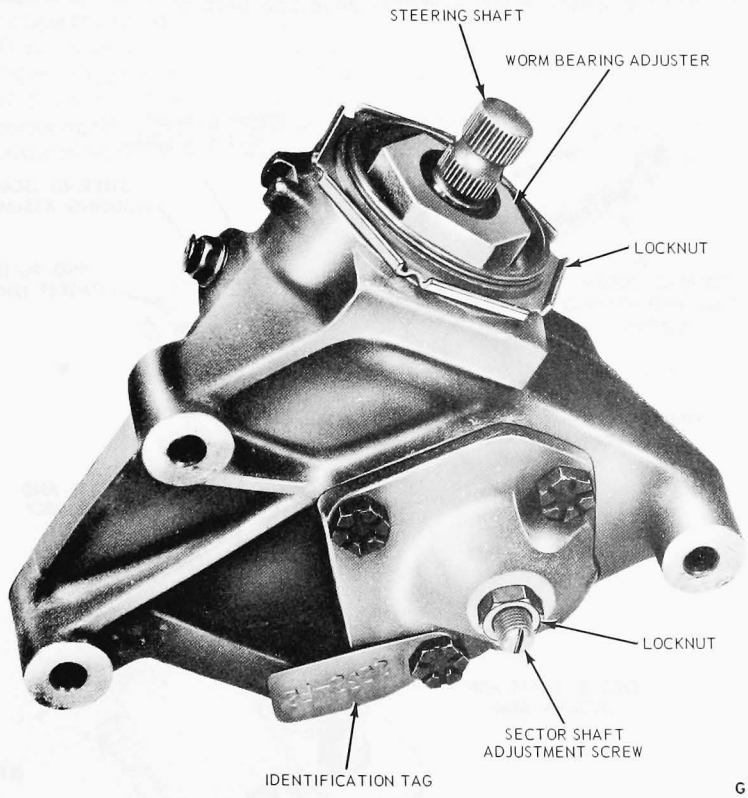

FIG. 7 Manual Steering Gear—Recirculating Ball— Econoline

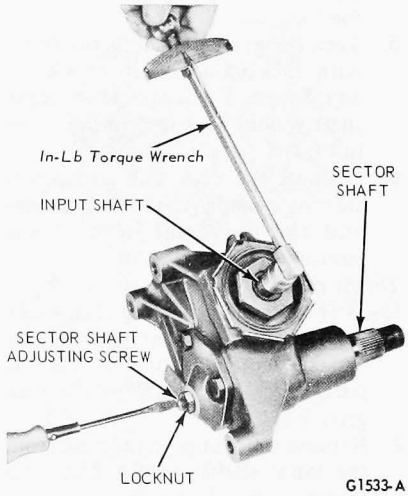

FIG. 8 Setting Mesh Load—Econoline

the torque 45 degrees from the stop. Tighten the lock nut while holding the screw in place.

7. Recheck the readings and replace the Pitman arm and the steering wheel hub cover.
8. Connect the fluid return line to the reservoir and fill the reservoir with specified lubricant to the proper level.

Do not pry against the reservoir to obtain proper belt load as it can be deformed and cause a leak.

9. Recheck the belt tension. When the tension has been correctly adjusted, tighten the bolts and the nut to 30-40 ft-lbs torque.

ROSS HPS-70 SEMI-INTEGRAL

Mesh Adjustment

This adjustment must be made through the mid-position to the high spot. **Do not adjust the mesh adjustment in any position except the straight-ahead position. Backlash is normal when the steering gear cam is in the end position, (wheels turned to one side).**

1. Disconnect the drag link and power steering cylinder from the Pitman arm and the universal joint from the gear input shaft.
2. Loosen the adjusting screw lock nut. Then, turn the adjusting screw (Fig. 13) clockwise until a 15 in-lb torque is required to turn the steering gear through the mid-position.
3. Back out (counterclockwise) the adjusting screw 1/8 turn.
4. Tighten the adjusting screw lock nut to 15-20 ft-lb torque to lock the adjustment. Be sure the adjusting screw does not turn when tightening the lock nut.
5. Turn the gear through its full travel with the engine off to check the adjustment. The torque at the input shaft should be 2 to 8 in-lb for the full travel (stop to stop).
6. Connect the drag link and power steering cylinder to the Pitman arm and the universal joint to the steering gear input shaft.

Thrust Bearing Adjustment

1. With the steering linkage disconnected, turn the steering gear off the center position to free the stud roller bearing from the cam groove.
2. Remove the clamp bolt and nut from the input shaft (cam) U-joint and separate the joint from the input shaft.
3. Remove four upper cover attaching

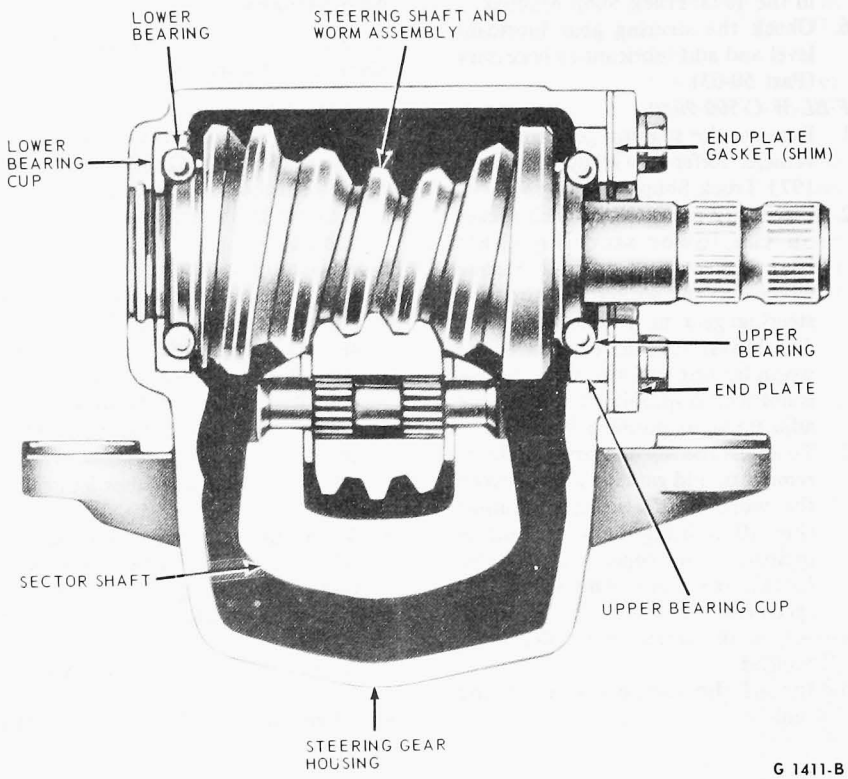

FIG. 9 Steering Gear—F-100 4-Wheel Drive and Bronco

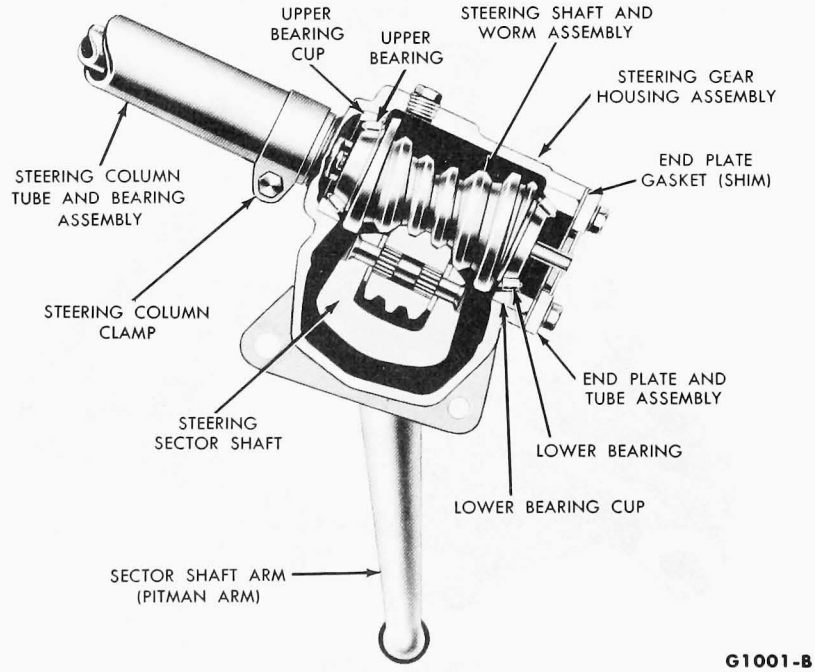

FIG. 10 Typical Gemmer Steering Gear—Sectional View

screws and remove the upper cover from the gear (Fig. 14). Care must be used to removee burrs and paint from the input shaft to avoid cutting the seal.

4. Install the upper cover attaching screws in the actuator housing with 3/8 inch thick spacers under the screw heads. This will hold the actuator and cam assembly in the gear during the adjustment.
5. Straighten the lock washer prong and remove the adjusting nut, lock washer, and the upper thrust washers and bearing.
6. Check the condition of the adjusting nut and cam shaft threads to be sure they are free from interference. This can be done by threading the nut on the shaft without the use of tools. If the nut cannot be installed all the way without tools, the threads must be repaired.
7. Position a thrust washer, thrust bearing, thrust washer, tongued washer (with internal lug) and a new lock washer on the shaft. Then, install the adjusting nut. **Do not bend the lock washer prongs at this time. The lock washer (Fig. 14) should be replaced every time the adjusting nut is moved.**
8. Torque the adjusting nut to 10 ft-lbs. Then, back the nut off 10 to 20 degrees (approximately 1 1/2 widths of the tongued washer lug). **The centering washers must be properly centered on the actuator during this adjustment.** Bend the lock washer lug that is nearest in alignment with a notch in the adjusting nut so that the lug is tight against the notch root.
9. Remove the 3/8 inch spacers and install the upper cover.
10. Position the U-joint on the steering gear input shaft and install the clamp bolt and nut.

Stud Roller Bearing Adjustment

The output shaft must be removed from the steering gear to adjust the stud roller bearing.

The operation of a properly adjusted roller bearing may feel rough when turned by hand. However, under a steering load it will be smooth and will give normal service life.

1. Wash the bearings in solvent, dry, and lubricate with gear lubricant. If a roller is lost or damaged, a new set should be installed. **Do not make partial replacement of the rollers.**
2. Assemble the bearing and install a new locking washer.
3. Install the adjusting nut and tighten as required to obtain a 1 to 4 in-lb preload on the bearing.
4. Rotate the stud several complete turns in each direction. Then check the rotational torque of the bearing and re-adjust to 1-4 in-lb if necessary.
5. Lock the adjustment with two lock washer prongs against the side of the nut. **If the lock washer is not replaced, the used prongs should be removed from the washer.**
6. Lubricate the bearing with steering gear lubricant.

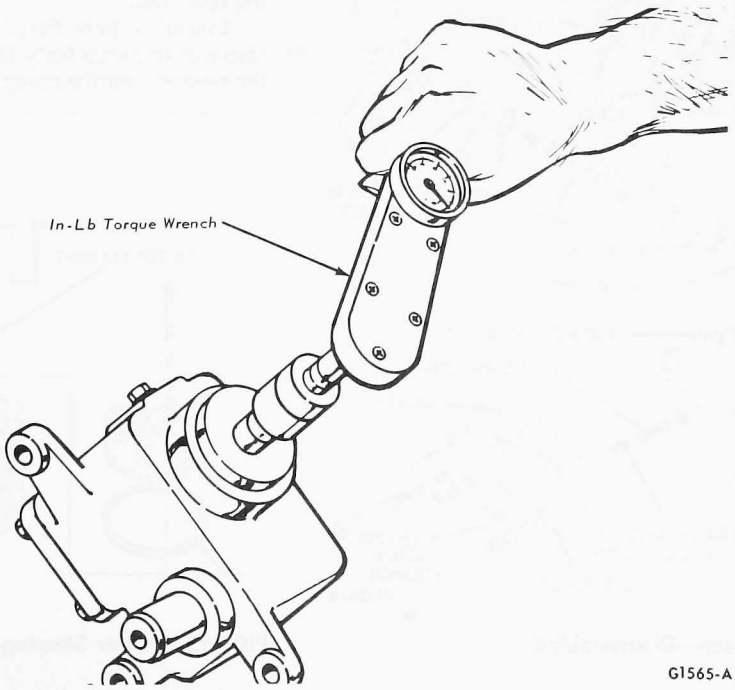

FIG. 11 Checking Steering Gear Preload—F-B-L-W-and C-500-9000

ROSS HF-54 AND HF-64 INTEGRAL STEERING GEAR

Sector Shaft Adjustment

1. Disconnect the drag link from the Pitman arm.
2. Center the steering wheel. Grasp the Pitman arm and check it for free

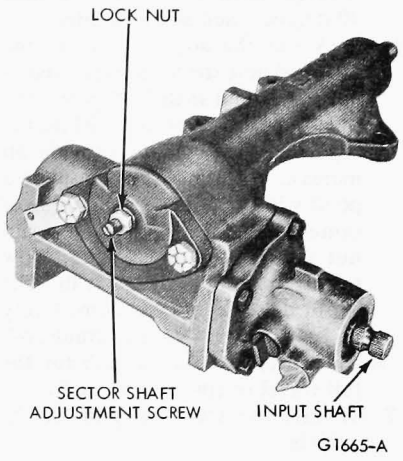

FIG. 12 Adjusting Mesh Load

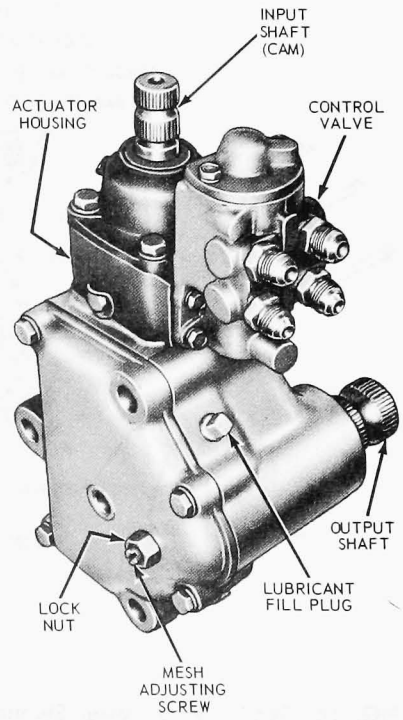

FIG. 13 Power Steering Gear

movement (lash) between the sector shaft and the rack piston.

3. If free movement is noted (lash), remove the steering gear from the vehicle. Refer to Group 13 of the 1973 Truck Shop Manual.
4. Loosen the sector shaft adjustment screw lock nut on the side cover.
5. After rotating the input shaft through its full travel for a minimum of five cycles, adjust the sector shaft adjusting screw to provide 15-20 in-lb torque as the input shaft is rotated 90 degrees each side of center.
6. Back out the adjusting screw one turn and note the torque required to move the input shaft 90 degrees each side of the center position. Move the adjusting screw in to provide an increase in torque of 2-4 in-lb at a point within 45 degrees each side of center after the adjusting screw jam nut is first tightened snug. Now torque to a final 20-25 ft-lb. The input torque of the completely assembled gear, minus hydraulic oil, should not exceed 15 in-lb for the full travel of tthe output shaft.
7. Install the steering gear in the vehicle.
8. Connect the drag link to the Pitman arm.
9. Connect the pump lines and refill the system with the specified fluid (Part 50-03).

POWER STEERING PUMP BELT TENSION ADJUSTMENT

Pump drive belt tension should not be checked using the thumb pressure or belt deflection methods. Correct belt adjustment is assured only with the use of a belt tension gauge.

1. Check the belt tension with a belt tension gauge, Tool T63L-8620-A. Refer to the Specifications section for drive belt tension specifications.
2. Loosen the pump attaching bolts, and pivot the pump to loosen or tighten the belt tension as necessary. **Do not pry on the reservoir.**
3. Torque the belt adjusting bolt to 30-35 ft-lbs. Check the tightness of the other mounting bolt (20-25 ft-lbs torque).
4. When all bolts have been properly tightened, make a final check of the pump belt tension.

REPLACE POWER STEERING PUMP RESERVOIR FLUID FILTER—EXCEPT F-100-250 BRONCO AND ECONOLINE

Remove nut and two washers securing reservoir cover and seal. Remove cotter pin, washer, spring, and retainer plate. Lift out filter element and replace with a new one. Reassemble parts securing filter element, seal and reservoir cover in reverse order of disassembly (Fig. 15). Be sure cover gasket is properly seated. Secure cover with wing nut and two washers.

TORQUE CHECKS

Tighten all attaching bolts and nuts at the intervals outlined in the Maintenance Schedules (Part 50-02) to the torque specified in the Specifications Section of this Part or the 1973 Truck Shop Manual.

POWER STEERING FILTER REPLACEMENT—EATON

Disconnect pressure line from steering pump and drain oil into a pan (1 gal. minimum). Disconnect the return line from the reservoir. On some installations it may be necessary to remove the pump from the vehicle. Remove the reservoir mounting studs and nuts (Fig. 16). Carefully rock the reservoir back and forth and remove it from the pump. **Do not pry the reservoir off the pump.** Remove the filter, filter relief spring and filter cap from inside the reservoir.

Install a new filter and a new reservoir to pump body O-ring. Install the reservoir on the pump and connect

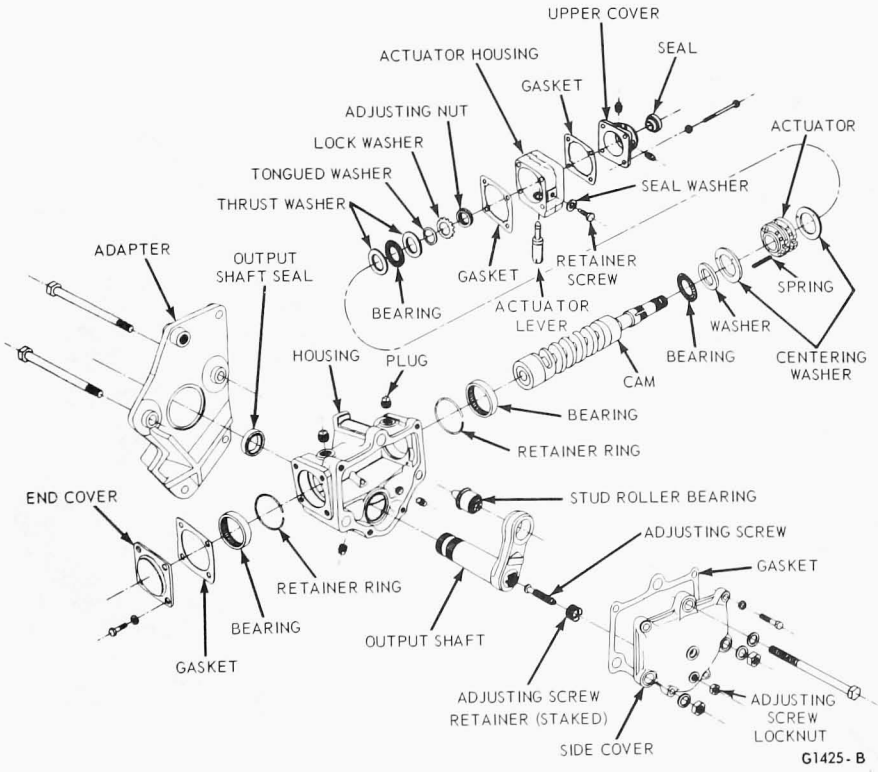

FIG. 14 Semi-Integral Power Steering Gear—Disassembled

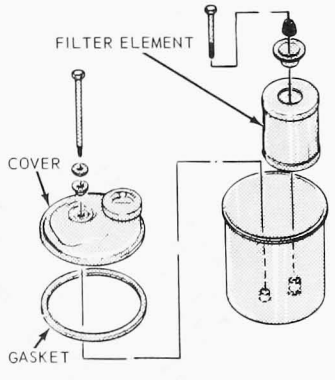

FIG. 15 Power Steering Pump Filter

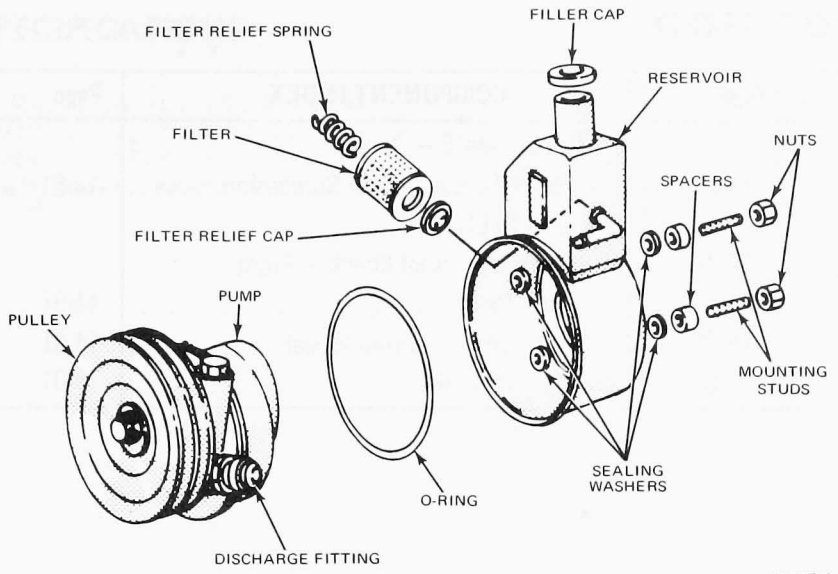

FIG. 16 Power Steering Filter Replacement—Eaton Heavy Duty

the hoses. Fill the reservoir to the cold fill mark. Run the engine for several minutes and refill reservoir to cold fill mark. Run engine and turn steering wheel from side to side several times to bleed air. Refill reservoir to cold fill mark.

SPECIFICATIONS

Refer to the 1973 Truck Shop Manual for any Specifications or Special Tools not contained in this Section.

DRIVE BELT TENSION

Belt Width	Minimum Tension (for use at maintenance interval only) (Hot Engine)	Installation Tension	
		Used Belt ①	New Belt
1/4"	30 lbs.	60 lbs.	80 lbs.
3/8" and 15/32"	50 lbs.	110 lbs.	140 lbs.
1/2"	50 lbs.	110 lbs.	140 lbs.

① Any belt that has operated for ten minutes or more is considered a used belt.

CY1523-A

PART 50-14 Suspension

COMPONENT INDEX	Page	COMPONENT INDEX	Page
LUBRICATION		MAINTENANCE – Cont.	
Spindle Pins Lubrication – Front Axle	14-01	U-Bolts Torque – Rear Suspension	14-01
Spring Leaves and Shackle Pins – Front and Rear	14-01	PRE-DELIVERY	
MAINTENANCE		Suspension Visual Check – Front and Rear	14-01
Spring Inspection	14-01	Toe-In Check – Front Wheel	14-01
Torque Checks	14-01	SPECIFICATIONS	14-01

PRE-DELIVERY

CHECK FRONT WHEEL TOE

Check the toe with the front wheels in the straight-ahead position. Measure the distance between the extreme front and also between the extreme rear of both front wheels. Both of these measurements (front and rear of wheels) should be taken at an equal distance from the floor and at the approximate center line of the spindle. The difference between these two distances is the amount that the wheels toe-in or toe-out. The wheels should always be adjusted to toe according to specifications in the Specifications Section of the Truck Shop Manual, Volume One, Part 14-01 this Part.

If the toe is incorrect, loosen the clamp bolts at each end of the spindle connecting rod tube. Rotate the tube until the correct toe is obtained, and torque the clamp bolts to specifications. Recheck the toe to make sure that no changes occurred when the bolts were tightened.

VISUALLY CHECK FRONT AND REAR SUSPENSION

Inspect the front and rear suspension for proper assembly and components. Check to assure that all lock tabs are bent for nut or bolt retention and that all cotter pins are properly installed.

LUBRICATION

LUBRICATE FRONT AND REAR SPRING LEAVES AND SHACKLE PINS

Apply the specified Chassis Lube (Part 50-03) to the shackle pin fittings with a pressure gun. Apply SAE 10W engine oil to the spring leaves with a squirt can.

LUBRICATE FRONT AXLE SPINDLE PINS (BOLTS)

Apply the specified Chassis Lube (Part 50-03) with a pressure gun at the fittings on both spindles.

MAINTENANCE

INSPECT SPRINGS AND TIGHTEN U-BOLTS

Inspect the spring leaves for being broken or sagged.

Tighten the spring U-bolts to specification as required (Specifications Section).

TORQUE CHECKS

Tighten all attaching bolts and nuts at the intervals outlined in the Maintenance Schedules (Part 50-02) to the torque specified in the Specifications Section of the 1973 Truck Shop Manual.

SPECIFICATIONS

Refer to the 1973 Truck Specifications Book Truck Shop Manual, Volume One, for the Suspension Specifications.

PART 50-15 Driving Axles and Driveshaft

COMPONENT INDEX	Page
LUBRICATION	
Air Shift Motor Oil Level Check – 2-Speed Axle	15-02
Lubricant – Draining and Filling Axle	15-01
Lubricant Level Check – Axle	15-01
Universal Joints and Slip Yoke Lubrication	15-02
Wheel Bearings – Repack	
Front – 4-Wheel Drive	15-02
Rear – Dana Axle	15-03
MAINTENANCE	
Air Shift Motor Vent Cleaning – 2-Speed Tandem Axle	15-04
Power Divider Lockout Control Vent Filter Cleaning	15-04
Wheel Bearing Adjustment – Front – 4-Wheel Drive	15-04
PRE-DELIVERY	
Axle Control Operation – 2-Speed Axle	15-01
Axle Shaft Flange Nuts Torque Check	15-01
Rear Axle Nuts Torque Check – Saddle Delivery Units	15-01
SPECIFICATIONS	15-05

PRE-DELIVERY

TORQUE REAR AXLE NUTS ON SADDLE MOUNTED UNITS

Check these nuts at pre-delivery to be sure they are tightened to the specified torque. Use a criss-cross sequence to assure even tightening.

TORQUE AXLE SHAFT FLANGE NUTS

Check the axle shaft nuts to be sure they are tightened to the specified torque. Use a criss-cross sequence to assure the nuts are tightened evenly.

SPEED AXLE CONTROL

Operate axle control switch and check for correct axle shift, engagement, and operation.

LUBRICATION

CHECK AXLE LUBRICANT LEVEL

Where magnetic drain plugs are used, the plugs should be cleaned each time they are removed.

Clean dirt and grease from the area around the filler plug, and remove the filler plug at the locations shown on the Lubrication Charts (Part 50-03). If additional lubricant is required, use only the specified type.

When checking lubricant level, the axle must be in running position (normal curb attitude). If checked on a frame contact hoist, use safety stands to hold the axle in normal curb attitude.

FORD AXLE

If the filler hole is in the housing cover, fill to the bottom of the filler hole. If the filler hole is in the carrier casting, fill to a maximum of 5/8 inch below the bottom of the filler hole.

ALL AXLES EXCEPT FORD AND TANDEM

Remove the filler hole plug. The lubricant should be level with the bottom of the hole.

TANDEM DRIVE AXLES

The axle must be run first, then allowed to stand for 5 minutes. The power divider and the forward rear axle use the same lubrication system and the 5-minute interval allows the lubricant to settle to the proper levels in the power divider case and axle housing. After the 5 minutes, check the lubricant level in the rear filler hole of the forward tandem axle only. It is not necessary to check the oil level in the power divider. If the level is up to the bottom of the filler hole of the forward rear axle, the power divider is also adequately lubricated. If the level is not up to the bottom of the filler hole, add the necessary lubricant. Check the rear tandem axle lubricant level through the rear filler hole.

DRAINING AND FILLING AXLE LUBRICANT

The ability of any axle to deliver quiet trouble-free operation over a period of years is largely dependent upon the use of good quality gear

lubricant. To insure long life for gears and bearings, use only the specified gear lubricants (Part 50-03).

DRAINING

Dana Axles and 4 x 4

Clean dirt and grease from the area around the fill plug, remove the fill plug and the cover lower bolt, and let the lubricant drain out at the bottom of the cover.

Ford Axles

Clean dirt and grease from the area around the fill plug, remove the fill plug, and draw out all the old lubricant through the fill plug hole with a suction pump.

All Axles Except Ford and Dana

To drain, unscrew the plug at the bottom of the housing and allow sufficient time for all the old lubricant to run out. On tandem drive axles, it is also necessary to unscrew the plug at the bottom of the power divider for drainage of lubricant in the power divider.

FILLING SINGLE-SPEED AXLES

Ford Axle

If the filler hole is in the housing cover, fill to the bottom of the filler hole. If the filler hole is in the carrier casting, fill to a maximum of 5/8 inch below the bottom of the filler hole.

All Except Ford Axles

Fill the axle through the filler hole until oil flows from the bottom of the hole. After filling the axle with the specified amount of lubricant, install the filler hole plug.

FILLING 2-SPEED AXLES

Fill the axle through the rear filler hole with the specified amount of lubricant (lubricant should be at the level of the bottom of the filler hole), then install the filler hole plug. If the carrier assembly oil channels are dry, one pint of lubricant should be added through the front filler hole.

Planetary Double Reduction Axles

Fill the axle through the rear filler hole with the specified amount of lubricant (lubricant should be at the level of the bottom of the filler hole), then install the filler hole plug. If the carrier assembly oil channels are dry, one pint of lubricant should be added through the front filler hole.

Tandem Drive Axles

Fill both axles with the specified amount until the lubricant is level with the bottom of the rear filler hole. Then, add the specified amount to the power divider through the filler hole located in the power divider case.

Eaton D Series Tandem Drive Axles

Fill the forward drive axle until the lubricant is level with the bottom of the filler hole in the rear cover. Then, add two pints through the forward filler hole located slightly offset to the right in the top portion of differential carrier. **Do not use the rear hole at top of the differential carrier as a lubricant filler hole. Fill the rear axle in accordance with instructions for single reduction, 2-speed or planetary double reduction, depending on the type of axle used.**

LUBRICATE UNIVERSAL JOINTS AND SLIP YOKE

1. Wipe all old lubricant and dirt from each universal joint lube fitting. Apply C1AZ-19590-B Lube to each universal joint lubrication fitting. Be careful not to force the seals out of position.

Properly lubricated joints will show lubricant seeping from all four journal cross bearing seals. If lubricant does not appear at a bearing seal, rotate the drive shaft so that the opposite bearing cap is facing downward. Exert downward pressure on the drive shaft and apply lubricant gun pressure to the fitting. Lubricate the slip yoke with C1AZ-19590-B.

2. Wipe excess lubricant from the fittings.

CHECK 2-SPEED AXLE AIR SHIFT MOTOR OIL LEVEL

The level should be maintained at the bottom of the filler plug hole. Above 0 degrees F, use SAE 10W engine oil. Below 0 degrees F, use three parts of SAE 10W engine oil to one part of kerosene. The oil and kerosene mixture can be used safely up to 32 degrees F, if necessary.

FRONT WHEEL BEARINGS—REPACK

4-WHEEL DRIVE VEHICLES

1. Raise the vehicle and install safety stands.
2. Remove the wheel cover, if installed.
3. Remove the front hub grease cap. Remove the driving hub retaining snap ring (Fig. 1) and slide the splined driving hub from between the axle shaft and the wheel hub. Remove the driving hub spacer. (If equipped with free-running lock-out hubs refer to Group 15, Truck Shop Manual).
4. With Tool T59T-1197-B, remove the lock nut, washer, and wheel bearing adjusting nut (Fig. 1) from the spindle. Remove the wheel, hub and drum as an assembly. Back off the brake adjusting screw, if necessary. The wheel outer bearing will be forced off the spindle at the same time. Protect the spindle and inner bearing cone from dirt.
5. Remove the grease retainer and the inner bearing cone and roller assembly from the hub with Tool 1175-AB and T50T-100-A.
6. Clean the lubricant off the inner and outer bearing cups with solvent and inspect the cups for scratches, pits, excessive wear, and other damage. If the cups are worn or damaged, remove them with a drift.
7. Soak a new grease retainer in light engine oil at least 30 minutes before installation. Thoroughly clean the inner and outer bearing cones and rollers with solvent, and dry them thoroughly. **Do not spin the bearings with compressed air.**

Inspect the cone and roller assemblies for wear or damage, and replace them if necessary. The cone and roller assemblies and the bearing cups should be replaced as a unit if damage to either is found.

8. Thoroughly clean the spindle and the inside of the hub with solvent to remove all old lubricant.

Cover the spindle with a clean cloth, and brush all loose dust and dirt from the brake assembly. **To prevent getting dirt on the spindle, carefully remove the cloth from the spindle.**

9. If the inner bearing cup was removed, install the cup or a new cup in the hub. **Be sure to seat the cup properly in the hub.**
10. Install the outer bearing cup in the hub with a suitable tool. **Be sure the cup is properly seated in the hub.**
11. Pack the inside of the hub with specified wheel bearing grease. Add lubricant to the hub only until the grease is flush with the inside diameter of both bearing cups.
12. All old grease should be completely cleaned from the bearings before repacking them with new grease. Pack the bearing cone and roller assemblies with wheel bearing grease. A bearing packer is desirable for this operation. If a packer is not available, work as much lubricant as possible between the rollers and cages. Lubricate the cone surfaces with grease.
13. Place the inner bearing cone and roller assembly in the inner cup, and install the new grease retainer. **Be sure that the retainer is properly seated.**
14. Install the wheel, hub, and drum assembly on the wheel spindle. **Keep**

the hub centered on the spindle to prevent damage to the grease retainer or the spindle threads. (If equipped with free-running lock-out hubs, refer to Group 15 of the 1973 Truck Shop Manual).

15. Install the wheel outer bearing cone and adjusting nut. Adjust the front wheel bearings as outlined in this Part.

REPACK AND ADJUST REAR WHEEL BEARINGS (DANA AXLE ONLY)

For F-250, F-350, P-350, P-400, E-300 and F-250 (4 x 4), the wheel bearings are packed with wheel bearing lubricant C1AZ-19590-B. Axle lubricant can also flow into the wheel hubs and bearings. On these axles, wheel bearing grease is the **primary** lubricant since the grease provides lubrication until the axle lubricant reaches the bearings during normal operation. On these axles, the wheel hub is also vented through the axle housing vent.

1. Set the parking brake and loosen the axle shaft bolts.
2. Raise the rear wheels off the floor and place the work stands under the rear axle housing so that the axle is paralled with the floor.
3. Remove the axle shaft bolts.
4. Remove the axle shaft and gaskets.
5. With the axle shaft removed, remove the gasket from the axle shaft flange studs.
6. Bend the lock washer tab away from the lock nut, and then remove the lock nut, lock washer, and the adjusting nut.
7. With the type of wheel jack shown in Fig. 2, raise the wheel to the point that all wheel weight is removed from the wheel bearings. Remove the outer bearing cone. Now pull the wheel straight off the axle.
8. With a piece of hard wood which will just clear the outer bearing cup, drive the inner bearing cone and inner seal out of the wheel hub.
9. Wash all the old grease or axle lubricant out of the wheel hub, using a suitable solvent.
10. Wash the bearing races and rollers and inspect for pitting, galling, and erratic wear patterns. Inspect the roller for end wear.
11. If the bearing cups are to be replaced, drive them out with a drift. Install the new cups with the tool shown in Fig. 3 or press them in.
12. Check for proper seating of the new bearing cups by trying to insert a 0.0015 inch feeler gauge between the cup and the wheel hub.

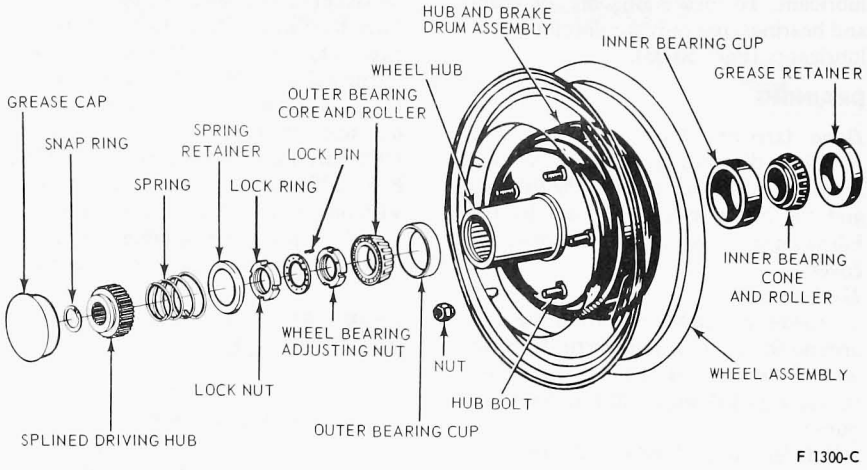

FIG. 1 Front Wheel and Hub Installation—F-Wheel Drive

13. Pack each bearing cone and roller with a bearing packer tool.
14. Place the inner bearing cone and roller assembly in the wheel hub. Install a new inner seal in the hub using tool T53T-1175-A or T53T-1175-D.
15. Adjust the jack so that the wheel can be installed straight on the axle housing without damaging the inner seal.
16. Wheel end play after assembly must be .001 to .010 inches. To obtain the specified end play, tighten the bearing adjusting nut to 50 to 80 ftlbs torque while rotating the wheel.
17. Back off (loosen) the adjusting nut 3/8 turn.
18. Apply axle lube to a new lock washer and install with smooth side out (away from adjusting nut).
19. Install lock nut and tighten to 90 to 110 ft-lbs torque using T70T-4252-P or T70T-4252-E. Wheel must rotate freely after torque.
20. With a suitable dial indicator, check wheel assembly end play (acceptable range .001 inch to .010 inch). If less than .001 inch or more than .010 inch, the procedure will have to be repeated starting with a loose bearing.
21. With a satisfactory end play and freely turning wheel, bend two lock washer tabs inward over an adjusting nut flat and two outward over the lock nut flat.
22. Install the axle shaft, gasket, lock bolts and washers. Tighten to 40-50 ft-lbs torque.
23. Adjust the brakes.
24. Use the preceeding procedure to lubricate the other wheel bearings.

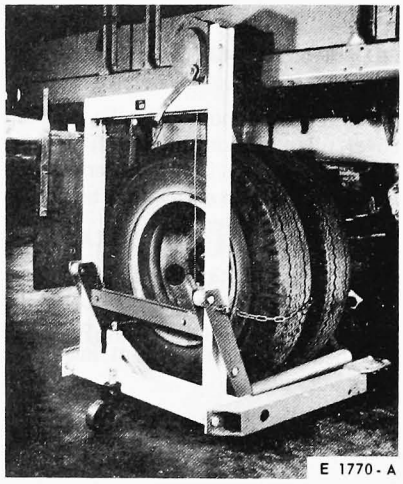

FIG. 2 Typical Wheel Jack

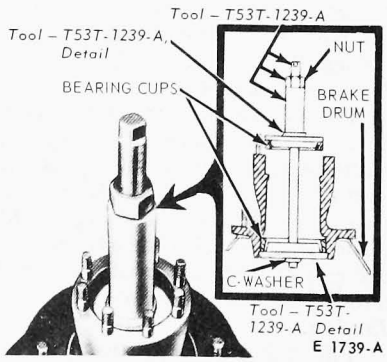

FIG. 3 Installing Wheel Bearing Cups

MAINTENANCE

CLEAN POWER DIVIDER LOCKOUT CONTROL VENT FILTER

Remove control cover, piston assembly and vent filter. Clean the parts and soak the piston felt oilers in SAE 10 oil for one hour. Clean and air dry the vent filter. Install the vent filter, piston assembly and cover on the lockout control.

2-SPEED TANDEM AXLE AIR SHIFT MOTOR VENT CLEANING

Brush off the area surrounding the vent hole to remove dirt or any other foreign matter. If the hole is plugged or partially obstructed, clear it with a piece of wire or other suitable probe.

FRONT WHEEL BEARING ADJUSTMENT—4-WHEEL DRIVE

BRONCO AND F-100

1. Raise the vehicle and install safety stands.
2. Back off the brake adjusting screw if necessary.
3. Remove the front hub grease cap and the driving hub snap ring (Fig. 4).
4. Remove the splined driving hub and the pressure spring. This may require a slight prying assist (Fig. 5).
5. Remove the wheel bearing lock nut and lock ring.
6. Using Tool T59T-1197-B and a torque wrench, tighten the bearing adjusting nut to 50 ft-lbs while rotating the wheel back and forth to seat the bearings.
7. Continue rotating the wheel, loosen the adjusting nut and then retorque it to 30-40 ft-lbs.
8. Back off the adjusting nut approximately 1/4 turn (90 degrees).
9. Assemble the lock ring by turning the nut to the nearest notch where the dowel pin will enter.
10. Install the outer lock nut and torque to 50 ft-lbs. Final end play of the wheel on the spindle should be 0.001 to 0.010 inches.
11. Install the pressure spring and driving hub, the driving hub snap ring and after applying non-hardening sealer to the seating edge of the grease cap, install the grease cap. If equipped with free-running lock-out hubs, refer to Front Wheel Drive Lock-Out Hub Installation in Group 15 of the 1973 Truck Shop Manual.
12. Adjust the brake if it was backed off.
13. Remove the safety stands and lower the vehicle.

F-250

1. Raise the vehicle and install safety stands.
2. Back off the brake adjusting screw, if necessary. Remove the wheel cover, if installed.
3. Remove the front hub grease cap. Remove the driving hub retaining snap ring and slide the splined driving hub from between the axle shaft and the wheel hub (Fig. 1). Remove the driving hub spacer. (If equipped with free-running lock-out hubs, refer to Front Wheel Drive Lock-Out Hub Removal in Group 15 of the 1973 Truck Shop Manual).
4. With Tool T59T-1197-B, remove the lock nut and lock ring from the spindle.
5. Using Tool T59T-1197-B and a torque wrench, tighten the bearing adjusting nut (Fig. 1) to 50 ft-lb, while rotating the wheel back and forth to seat the bearings.
6. Continue rotating the wheel and then, loosen and retorque the adjusting nut to 30-40 ft-lb.
7. Back the adjusting nut off approximately 1/4 turn (90 degrees). Assemble the lock ring by turning the nut to the nearest notch where the dowel pin will enter.
8. Install the outer lock nut and torque to 50 ft-lb. Final end play of the wheel on the spindle should be .001 to 0.010 inch.
9. Install the driving hub, spacer, snap ring and hub grease cap. Apply a thin coat of non-hardening sealer to the seating edge of the grease cap, before installation. (If equipped with free-running lock-out hubs, refer to Front Wheel Drive Lock-Out Hub Installation in Group 15 of the 1973 Truck Shop Manual).
10. Adjust the brake, if backed off to permit drum removal.
11. Remove the safety stands and lower the vehicle.

F-600

1. Remove the outer hub cap retaining screws, and remove the cap.
2. Remove the retaining lock ring (Fig. 6).
3. Remove the retaining screws and remove the splined drive plate.

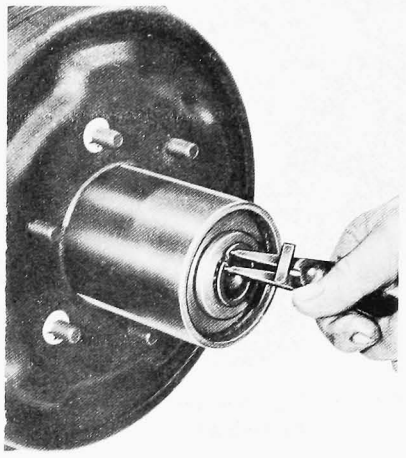

F 1812-A

FIG. 4 Removing Snap Ring

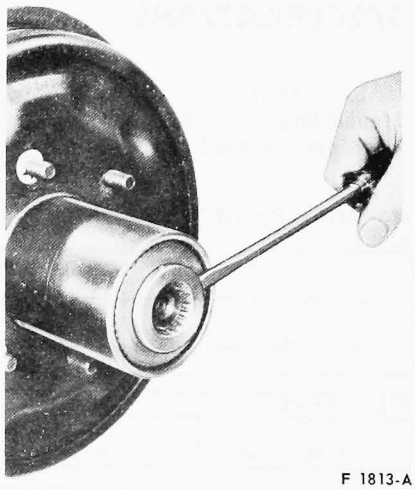

F 1813-A

FIG. 5 Removing Splined Driving Hub

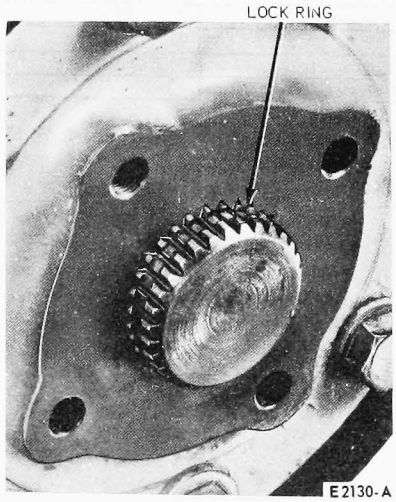

FIG. 6 Access to Lock Ring

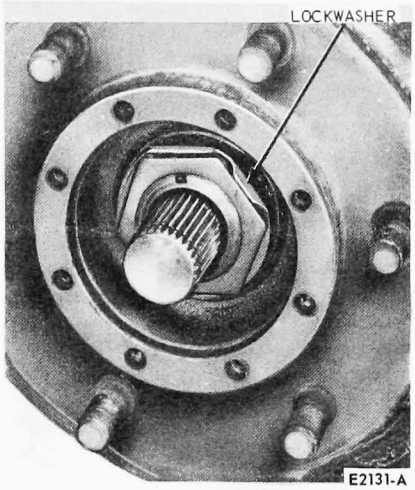

FIG. 7 Lock Nut and Washer Assembled

4. Bend the tab of the lock washer away from the lock nut and remove the lock nut (Fig. 7).
5. Remove the lock washer and **discard** it.
6. While rotating the wheel back and forth to correctly seat the bearings, torque the adjusting nut to 50 ft-lbs.
7. Back off the adjusting nut from 1/4 to 1/3 turn.
8. Position a **new** lock washer against the adjusting nut and apply a film of oil to the outer face of the lock washer.
9. Run the lock nut up against the lock washer and torque it to 100-150 ft-lbs.
10. Bend one tab of the lock washer over the adjusting nut.
11. Bend one tab of the lock washer (in the opposite direction) over the lock nut. **Use a blunt tool when bending the tabs to avoid making any chips which could cause serious bearing damage.**
12. Apply Silastic Sealer to the front and rear mounting faces of the splined drive plate.
13. Position the drive plate, install the retaining screws and torque them to specifications.
14. Install the retaining lock ring.
15. Position the outer hub cap and install the retaining screws and torque them to specifications.

SPECIFICATIONS

Refer to the 1973 or Truck Shop Manual for any Specifications or Special Tools not contained in this Section.

REAR AXLE LUBRICANT CAPACITIES

BRONCO		
Axle – Rear	Approx. Capacity (Pts.)	
	U.S.	Imp.
2780 lbs.	9	7-9/16
3300 lbs.	9	7-9/16
Axle – Front	3-1/2	3

ECONOLINE		
Axle – Rear	Approx. Capacity (Pts.)	
	U.S.	Imp.
Standard	6	5
Heavy-Duty and Limited Slip	6	5

F-100–350 & P-Series			
Rear Axle Model	Truck Model	Approx. Cap (Pints)	
		U.S. Meas.	Imp. Meas.
Ford 3300	F-100	6-1/2	5-3/8
Dana 44F (Front Axle)	4-Wheel Drive (F-100, 250)	4 ①	3-3/8
Dana 44F HD (Front Axle)	4-Wheel Dr. (F-250)	4 ①	3-3/8
Dana 60–3	F-100	6	5
Dana 60	F-250, P-350, P-3500	6 ②	5
Dana 70	F-350, P-350, P-400	6-1/2 ②	5-3/8
Rockwell C-100-N	P-500, P-5000	13	10-7/8
Rockwell D-100-N	P-500	13	10-7/8

① All locking front axles add 2 oz. friction modifier EST-M2C118-A.

② All locking rear axles add 4 oz. friction modifier EST-M2C118-A.

500–750, 6000–7000 Series Truck		
Make and Model	Approximate Capacity (Pints) (a)	
	U.S. Measure	Imperial Measure
Eaton 17101, 17121	29	24
Rockwell C-100 & D-100 (a)	11	9-1/4
Rockwell F-106 (a)	13	10-7/8
Rockwell H-170 (a)	26	21-1/2
Rockwell FDS-75 (F-600 4 x 4)	13	10-7/8
Two-Speed Axle		
Eaton 15201 (a) (c)	16-5/8	13-7/8
Eaton 16244 (a) (c)	22-1/8	13-1/8
Eaton 17201, 17221 (b) (c)	29	24

(a) If hubs have been removed, an additional 1/2 pint of axle lubricant must be added. Add lubricant through the axle vent.

(b) If hubs have been removed, an additional 1 pint of axle lubricant must be added. Add lubricant through the axle vent.

(c) Quantities listed are approximate. Axle should be filled until lubricant is level with bottom of filler hole with vehicle in normal operating position.

CY1392-B

REAR AXLE LUBRICANT CAPACITIES – 800–900 and 8000–9000 SERIES

Tandem Axles			
Make and Model		Approximate Capacity (Pints) (a)	
		U.S. Measure	Imperial Measure
Eaton 30DSC 30DTC, 30PC (b)	Forward Rearward Power Divider	26 25 2	21-5/8 20-7/8 1-5/8
Eaton 34DSC, 34DSE 34DPC, 34DPE 34DTC, 34DTE 34D-3C (c)	Forward Rearward Power Divider	30 27 2	25 22-1/2 1-5/8
Eaton 38DSC, 38DTE 38DTC, 38DSE 38DPTE 38DPC (d)	Forward Rearward Power Divider	31 27 2	25-7/8 22-1/2 1-5/8
Rockwell SLHD (c)	Forward Rearward Power Divider	32-1/2 32 2	27 26-5/8 1-5/8
Rockwell SHHD (b)	Forward Rearward Power Divider	24 20 2	20 16-1/2 1-5/8
Rockwell SQHD (d)	Forward Rearward Power Divider	34 31 2	28-1/2 26 1-5/8
Eaton 42DPB 42DPD (d)	Forward Rearward Power Divider	27 27 2	22-1/2 22-1/2 1-5/8

(a) Add two pints of lubricant to the inter-axle differential housing in addition to the specified amount when a new or reconditioned drive unit is installed.

Single-Speed Axle		
Make and Model	Approximate Capacity (Pints) (a)	
	U.S. Measure	Imperial Measure
Rockwell RT-341-A	33	27-1/2
Eaton 17101, 17121	29	24
Eaton 19121, 19221	34	28-1/2
Eaton 18101, 18121, 18301	31-1/2	26-3/8
Rockwell H-170 (b)	24-1/2	20-3/8
Rockwell R-171-B (f)	43	35-7/8
Rockwell Q-246A (f)	35	29-1/8
Two-Speed Axle		
Eaton 16244 (b) (e)	20-1/2	17-1/8
Eaton 17201, 17221 (e)	29	24
Eaton 18101, 18121 (d) (e)	33-1/2	32-7/8

(b) If hubs have been removed an additional 1/2 pint of axle lubricant must be added. Add lubricant through the axle vent.

(c) If hubs have been removed an additional 1 pint of axle lubricant must be added. Add lubricant through the axle vent.

(d) If hubs have been removed an additional 1-1/2 pints of axle lubricant must be added. Add lubricant through the axle vent.

(e) Quantities listed are approximate. Axle should be filled until lubricant is level with bottom of filler hole with vehicle in normal operating position.

(f) Fill to bottom of filler hole.

CY1393-A

PART 50-16 Clutch and Manual Transmissions

COMPONENT INDEX	Page
LUBRICATION	
Air Cylinder Shift Lever and Linkage Lubrication – Fuller Transmission	16-02
Breather Cleaning – Main and Auxiliary Transmissions	16-02
Clutch Equalizer	16-02
Clutch Linkage Pivots and Clevises	16-02
Clutch Pedal Pivot Shaft	16-02
Clutch Release Bearing	16-02
Control Valve Body, Splitter and Range Control Lubrication – 16-Speed Spicer Transmission	16-02
Drain, Flush and Refill Standard Transmission	16-03
Linkage Pivots Lubrication – Transmission	16-02
Lubricant Fill Procedure – Manual Transmission	16-02
Lubricant Level Check – Main and Auxiliary Transmissions	16-02
Remote Gear Shift and Auxiliary Transmission Linkage, Cables and U-Joints Lubrication	16-02
Transfer Case Lubricant Level Check – 4-Wheel Drive	16-03
Transfer Case – Drain and Refill – 4-Wheel Drive	16-03
MAINTENANCE	
Air Filter Check – Fuller Transmission	16-03
Air Filter Element Replacement Spicer 16-Speed Transmission	16-03
Fuller Transmission	16-04
Air Filter Water Drain – Fuller Transmission	16-04
Clutch Internal Adjustment – Multiple Disc Type	16-04
Clutch Master Cylinder Fluid Level Check – Hydraulic Clutch	16-01
Clutch Pedal Travel – Check and Adjust	16-05
Hydraulic Clutch System Bleeding	16-09
Oil Filter Element Replacement – Spicer Transmission	16-03
Transmission Mountings Check – Main and Auxiliary	16-09
Transmission Shift Lever – Check and Adjust	16-02
Torque Checks	16-01
PRE-DELIVERY	
Clutch Master Cylinder Fluid Level Check – Hydraulic Clutch	16-01
Clutch Operation	16-01
Lubricant Level Check – Transmission	16-02
Shift Lever Operation – Transmission	16-02
Shift Operation – Transfer Case	16-01
SPECIFICATIONS	16-23

PRE-DELIVERY

CLUTCH OPERATION

Check free travel and full return of the clutch pedal and disengagement of the clutch. Check for chatter, slipping, excess pedal efforts or noise. Refer to the specifications (Specifications Section) for free travel measurements. Adjust if required as outlined in Maintenance.

CHECK HYDRAULIC CLUTCH MASTER CYLINDER FLUID LEVEL

The clutch master cylinder reservoir should be filled to within 1/2 inch from the top. Use only the specified fluid (Part 50-03).

TRANSFER CASE SHIFT OPERATION

Check to be sure the transfer case shifts properly from one range to another. Check 4-wheel drive engagement and disengagement.

TRANSMISSION SHIFT LEVER

Check the transmission for smooth shifting operation through all gears. Adjust the transmission shift linkage if necessary. Refer to Group 16 of the 1973 Truck Shop Manual for the adjustment procedure.

CHECK TRANSMISSION LUBRICANT LEVEL

Refer to the lubrication section of this Part for the lubricant level checking procedure.

LUBRICATION

LUBRICATE CLUTCH LINKAGE PIVOTS AND CLEVISES

Lubricate all clevis pins and pivot points sparingly with SAE 10W engine oil.

LUBRICATE CLUTCH EQUALIZER

Wipe the lubrication fitting clean on the clutch equalizer (where so equipped), and apply Chassis Lube as specified in the lubricants chart (Part 50-03).

LUBRICATE CLUTCH PEDAL PIVOT SHAFT

On all except P-Series, apply SAE 10W oil to the clutch shaft. On P-Series, apply the specified Chassis Lube (Part 50-03), with a pressure gun at the fitting.

LUBRICATE CLUTCH RELEASE BEARING

Apply lubricant to the pressure grease fitting on the bearing hub (all medium duty vehicles equipped with super duty or Diesel engines). **Do not use ordinary chassis lubricant. Do not over-lubricate.** Use only high temperature lubricant meeting Ford Specifications (Part 50-03).

LUBRICATE TRANSMISSION LINKAGE PIVOTS

Lubricate all clevis pins and pivot points with SAE 10W engine oil. Wipe the lubrication fitting on the first and reverse shift lever at the lower end of steering column and apply Specified Chassis Lube (above 10 degrees F) or calcium soap grease (below 10 degrees F). Refer to the Lubricant Specifications in Part 50-03.

LUBRICATE SPICER 16-SPEED TRANSMISSION CONTROL VALVE BODY, SPLITTER AND RANGE CONTROLS

CONTROL VALVE BODY

1. Wash off the top of the control valve body to expose the 1/8 inch pipe plug located in the center of the valve body.
2. Place the gear shift lever in one of the manual-shift positions to shut off the air to the valve body.
3. Remove the pipe plug, using caution to prevent dirt entering the opening.
4. Have an assistant operate both splitter and range control handles while applying approximately one tablespoon of castor oil through the pipe plug opening.
5. When valve body is full, replace the pipe plug.

SPLITTER CONTROL

Apply engine oil through the lubricating hole provided in the splitter control lever. Rotate splitter to work oil film over the inner sleeve.

RANGE CONTROL

Pull the range control handle into the up position. Wipe off old oil film, dirt, etc. When clean, apply a light film of oil to the plunger and operate the handle up and down to distribute lubricant.

LUBRICATE TRANSMISSION REMOTE GEAR SHIFT AND AUXILIARY TRANSMISSION LINKAGE, CABLES AND U-JOINTS

For prevailing temperatures above 10 degrees F, apply the specified chassis lubricant (Part 50-03), with a pressure gun to transmission remote gear shift front cross-shaft and levers, auxiliary transmission linkage, and transmission cables, U-joints, crank arm and side bushings (C-and W-Series only).

For prevailing temperatures below 10 degrees F, use calcium soap grease (conforming to Ford Specification in Part 50-03).

LUBRICATE FULLER TRANSMISSION AIR CYLINDER SHIFT LEVER AND LINKAGE

Apply specified chassis lubricant (Part 50-03) to linkage connections with pressure gun.

MANUAL TRANSMISSION LUBRICANT FILL PROCEDURE

3-SPEED FORD AND 4-SPEED WARNER AND NEW PROCESS TRANSMISSIONS

The following instructions should be used when a transmission has been drained for any reason: Remove the speedometer cable and fill the transmission with the specified lubricant (Part 50-03) through the speedometer cable hole in the transmission extension housing.

MANUAL TRANSMISSION LUBRICANT LEVEL AND CLEAN BREATHER (MAIN AND AUXILIARY)

1. Remove the fill plug from the side of the case.
2. If lubricant does not flow from the fill hole, fill the case with the specified lubricant (Part 50-03) until

it is level with the bottom of the fill hole.
3. Install the filler plug.
4. Clean all dirt from the breather.

DRAIN AND REFILL STANDARD TRANSMISSION—100 THRU 350 SERIES (EXCEPT 3-SPEED LIGHT AND MEDIUM DUTY FORD DESIGN)

1. Remove the filler plug from the side of the case and the drain plug from the bottom of the case. Allow the lubricant to drain.
2. Install the drain plug after the case is completely drained.
3. Fill the case with the specified lubricant (Part 50-03) until the fluid is level with the lower edge of the filler hole.
4. Install the filler plug.

CHANGE LUBRICANT IN MANUAL SHIFT OR AUXILIARY TRANSMISSIONS—500 THRU 9000 SERIES

1. Remove the filler plug and drain plug, and then let the old lubricant run out. Thoroughly flush the case with clean flushing oil or kerosene.
2. Install the drain plug.
3. Refill the case until the new lubricant is level with the bottom of the filler plug hole, and then install the filler plug.

DRAIN, FLUSH AND REFILL SPICER 16-SPEED TRANSMISSION

1. Thoroughly clean the area around the drain and filler plugs.
2. Remove the drain plug with the attached pump screen.
3. Drain the lubricant while the oil is still hot, to ensure maximum drainage.
4. Replace the drain plug.
5. Fill the transmission with 3 1/2 to 4 gallons of diesel fuel.
6. Run the engine at 800-900 rpm to 6 to 7 minutes with the transmission shift lever in 4th gear position and the auxiliary shift lever in neutral.
7. Drain flushing oil, clean the pump screen and replace the drain plug.
8. Refill the transmission with specified lubricant (Part 50-03).

DRAIN 16-SPEED SPICER TRANSMISSION AND CLEAN OIL SCREEN

1. Thoroughly clean the area around the drain and filler plugs.
2. Remove the drain plug with the attached pump screen.
3. Drain the lubricant while the oil is still hot, to insure maximum drainage.
4. Clean and replace the pump screen and drain plug and refill the transmission.

DRAIN, FLUSH AND REFILL 5-, 10-AND 15-SPEED FULLER TRANSMISSIONS

1. When the transmission is warm, remove the drain plug at the bottom of the case and drain the oil.
2. Clean the drain plug and replace it.
3. Remove all dirt from the area of the filler plug opening on the left side of the case, and remove the filler plug.
4. Fill the transmission with a clean flushing oil or kerosene to the level of the filler plug opening. Install the filler plug. **On off-highway equipment, remove the lubricating pump before flushing.**
5. With the transmission in neutral, run the engine at fast idle for a period of 10 seconds.
6. Remove the drain plug, drain the flushing oil, and replace the plug.
7. Remove the filler plug, fill the transmission with engine oil SAE 50 above 10 degrees F or SAE 30 below 10 degrees F to the level of the filler opening, and replace the plug. **Do not overfill. Overfilling will cause oil to be forced out of the case through the mainshaft openings.**

CHECK TRANSFER CASE FLUID LEVEL (4-WHEEL DRIVE)

1. Remove the fill plug from the case.
2. If lubricant does not flow from the fill hole, fill the case with the specified lubricant (Part 50-03) until it is level with the bottom of the fill hole.
3. Install the fill plug.

DRAIN AND REFILL TRANSFER CASE (4-WHEEL DRIVE)

1. Remove the filler plug from the side of the case.
2. Remove the drain plug from the bottom of the case, and allow the old lubricant to drain out.
3. Clean and install the drain plug after the case is completely drained.
4. Fill the case with engine oil SAE 50 above 10 degrees F or SAE 30 below 10 degrees F until it is level with the lower edge of the filler hole.
5. Install the drain plug.

MAINTENANCE

REPLACE SPICER 16-SPEED TRANSMISSION AIR FILTER ELEMENT

1. Remove the drain plug from the air filter (attached to the right rear side of the transmission cover).
2. After air has been exhausted from the system, remove the outer can and filter element by backing off the lock screw at the top.
3. Wash the outer can thoroughly and reassemble, using a new filter element and new gaskets for the top and bottom of the outer cam.
4. Replace the drain plug.
5. Build up air pressure in the system and check for leaks.

REPLACE OIL FILTER ELEMENT—SPICER TRANSMISSIONS IF SO EQUIPPED

1. After draining the transmission case, remove the attaching bolts and filter cover from either one or both power take-off openings in the case.
2. Remove and discard the filter element(s).
3. After the case has been thoroughly flushed out, install the new filter element(s) to the power take-off opening(s) in the case.
4. Assemble the cover(s) to the case with the attaching bolts.

CHECK FULLER TRANSMISSION AIR FILTER

Check the air filter to be sure it is properly installed and the air inlet is not restricted.

If the shifts between high and low range are sluggish, even though the

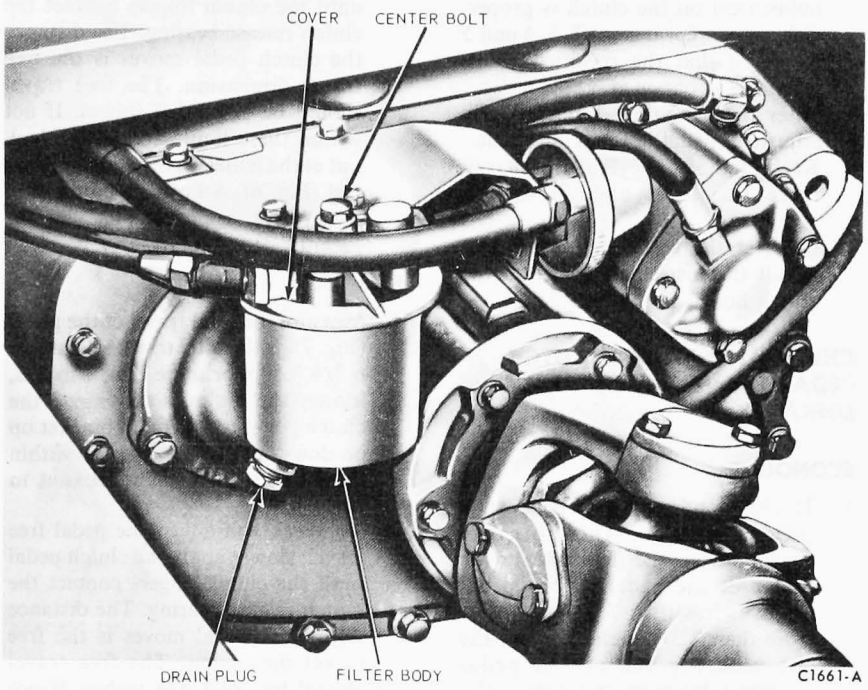

FIG. 1 Transmission Air Filter

transmission air filter is drained of water, the filter should be removed and cleaned.

1. Loosen the center bolt and remove the filter body from its cover (Fig. 1).
2. Remove the filter element from the body and clean both element and body of all dirt and/or obstruction.
3. Install the element in the body, assemble the body to its cover, and secure with the center attaching bolt.

DRAIN WATER FROM FULLER TRANSMISSION AIR FILTER

If the shifts between high and low range are sluggish, drain the water from the transmission air filter by removing the drain plug (Fig. 1).

REPLACE AIR FILTER ELEMENT—FULLER TRANSMISSION

1. Loosen the center bolt and remove the filter body from its cover (Fig. 1).
2. Remove the filter element from the body, and discard the element.
3. Clean the filter body, and install a new filter element in the body.
4. Assemble the filter body to its cover, and secure with the center attaching bolts.

INTERNAL ADJUSTMENT—MULTIPLE DISC TYPE CLUTCH

The linkage on a 14 or 15 1/2 inch multiple disc clutch should not be adjusted to compensate for clutch facing wear. Linkage should only be reset to provide proper free-pedal after the internal clutch adjustment has been made. Proper linkage settings are given at the end of this Part.

1. **To make an internal clutch adjustment, remove the inspection cover from the bottom of the clutch housing.**
2. Disconnect the retracting spring. Holding the release lever against the release bearing, measure the distance between the release bearing and the clutch spring hub on models with a synchronized transmission. On models with non-synchronized transmissions, measure the distance between the release bearing and the clutch brake. On vehicles equipped with a 14 inch or 15 1/2 inch two plate clutch, the dimension between the release bearing and the clutch spring hub should be 9/16-5/8 inch. The dimension between the release bearing and the clutch brake should be 1/2 inch (Fig. 2). On vehicles equipped with a 14 inch single plate clutch, the dimension between the release bearing and the clutch spring hub should be 11/32-13/32 inch.

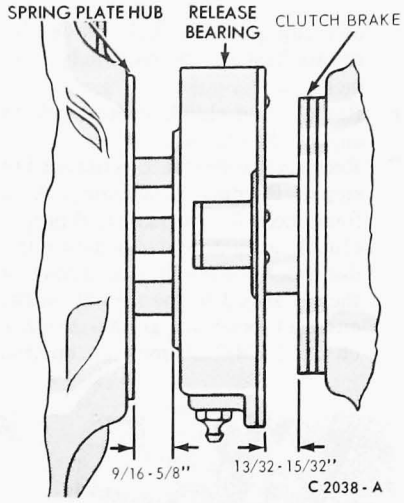

FIG. 2 Adjustment Dimensions—14 Inch Double-Disc Clutch

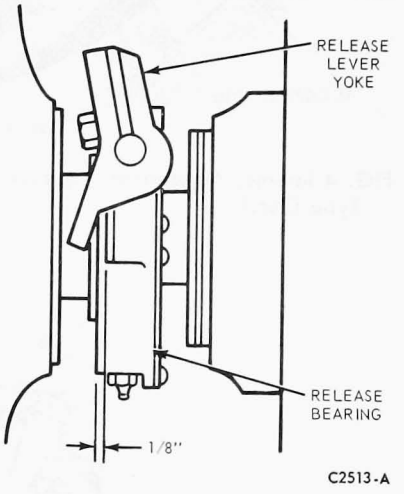

FIG. 3 Adjustment—Spicer-Type Clutch

On all Spicer type clutches, also adjust the adjusting ring to provide a 1/8 inch clearance between the release yoke fingers and the release bearing (Fig. 3).

3. Adjust the clutch assembly by rotating the engine flywheel until the adjusting ring lock and bolt are exposed. Remove the bolt and lock (Fig. 4).
4. Hold or block the clutch pedal in the released position.
5. Use a pry bar to turn the adjusting ring (Fig. 4) counterclockwise (looking from rear of vehicle) to move the release bearing toward the flywheel; or clockwise to move the release bearing away from the flywheel. Rotation or movement of

one lug position will move the release bearing approximately 1/32 inch.

6. Remove the clutch pedal block to engage the clutch.
7. Recheck the clearance as outlined in step 2. Readjust if necessary. As a final check for adequate and proper clutch adjustment, measure the distance between the centerline of the pedal pad to the firewall in the engaged position. If the distance checks 3 1/4-3 1/2 inch, the internal adjustment on the clutch is proper. Otherwise, repeat steps 2, 3, 4 and 5 above so that the specified above tolerance is obtained.
8. After the clutch has been properly adjusted, install the lock and bolt.
9. Recheck the slave cylinder push rod-to-release lever clearance if so equipped.
10. Connect the retracting spring and install the inspection cover on the clutch housing.

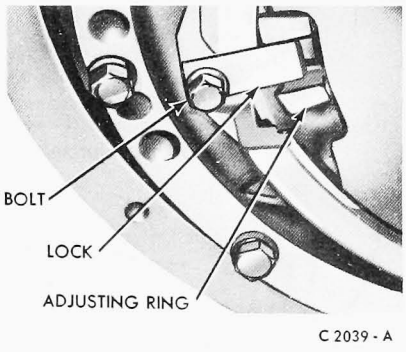

FIG. 4 Internal Adjustment—Spicer-Type Clutch

CHECK AND ADJUST CLUTCH PEDAL TRAVEL—MECHANICAL LINKAGE

ECONOLINE

1. To check and adjust the pedal total travel, measure and note the distance from the floor pan to the center of the pedal. If the pedal height is less than 7 1/2 inches or more than 7 3/4 inches, loosen the nut securing the clutch pedal eccentric bumper and rotate the bumper until the travel is within specifications (Fig. 5) Torque the locknut to 10-17 ft-lbs.
2. To check and adjust the pedal free travel, slowly apply the clutch pedal until the clutch fingers contact the clutch release bearing. The distance the clutch pedal moves is the free travel dimension. The free travel should be 3/4-1 1/2 inches. If not within these limits, loosen the lock nut at the bullet on the clutch release rod (Fig. 6). Adjust the bullet until free travel is correct. Tighten the locknut.

BRONCO

1. Measure the total travel of the pedal (Fig. 7). If the total travel is less than 6 3/4 inches or more than 7 inches, loosen the locknut and move the clutch pedal bumper and bracket up or down until the travel is within these limits. Torque the locknut to 10-17 ft-lbs.
2. To check and adjust the pedal free travel, slowly apply the clutch pedal until the clutch fingers contact the clutch release bearing. The distance the clutch pedal moves is the free travel dimension. The free travel should be 3/4-1 5/8 inches. If not within these limits, disconnect the retracting spring and loosen the nut at the bullet on the clutch release rod. Adjust the bullet until free travel is correct.

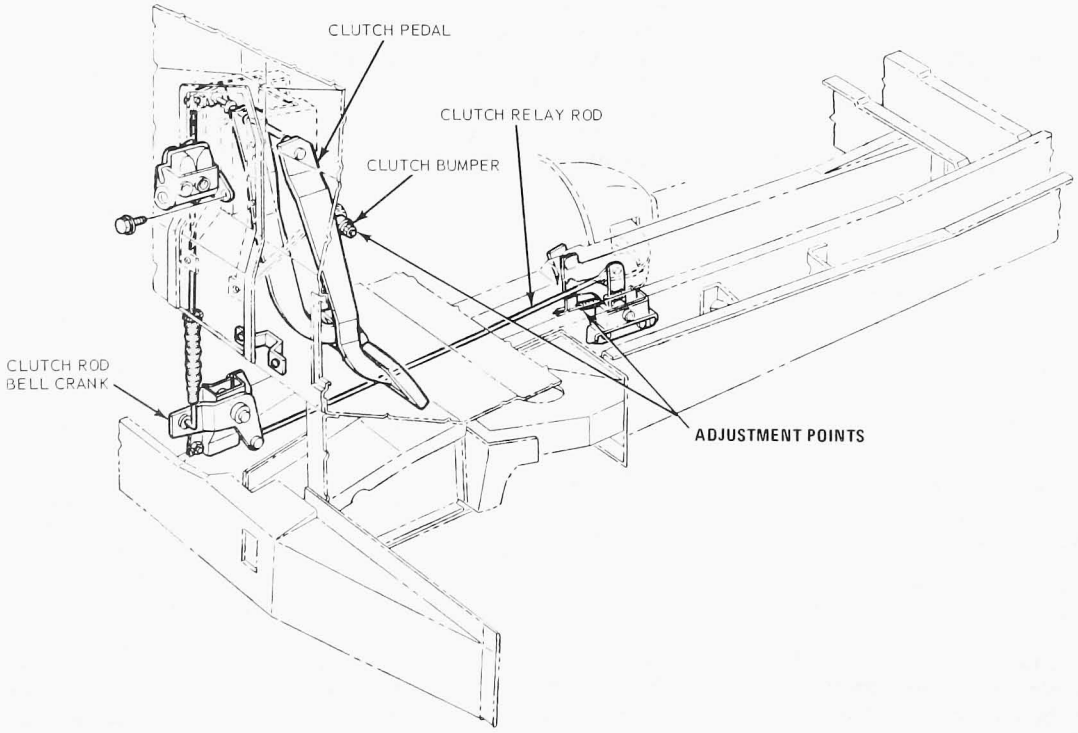

FIG. 5 Clutch Mounting and Linkage—Econoline

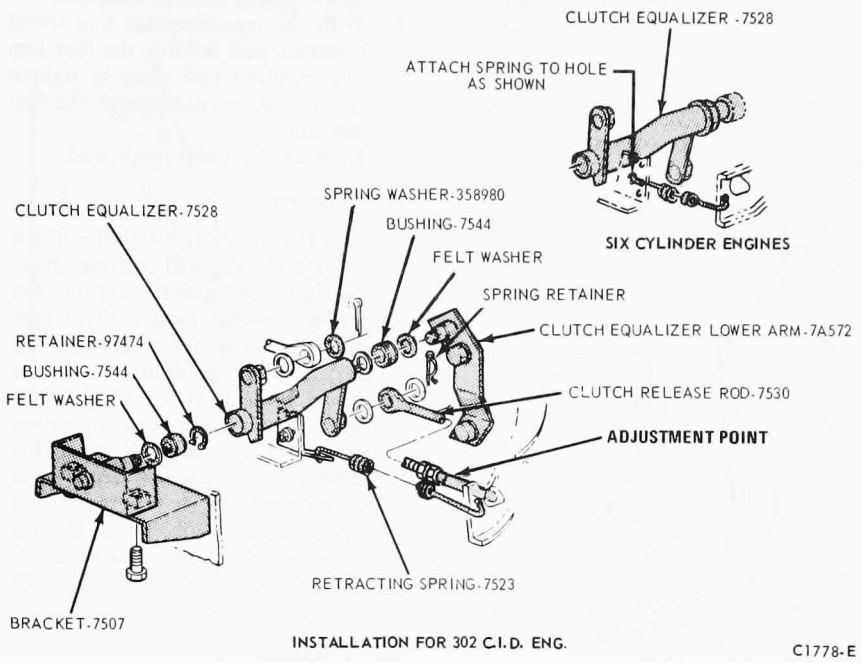

FIG. 6 Clutch Equalizer Shaft—Econoline

F-100-350 SERIES

1. Clutch pedal height is fixed in this Series and is not adjustable.
2. Measure the clutch pedal free travel using a steel tape as shown in Fig. 8. Measure the distance from the clutch pedal pad to the steering wheel rim. Depress the pedal slowly until the free travel between the release bearing assembly and the pressure plate assembly is taken up. Note this measurement. The difference between the two measurements is the free travel.
3. If the free travel measurement is less than 3/4 inches, the clutch linkage must be adjusted.
4. Loosen the two jam nuts on the release rod assembly (Figs. 9, 10 and 11) and back off both nuts several turns.
5. Loosen or tighten the first jam nut against the release rod extension (bullet) until a free-travel measurement indicates a 3/4 to 1 1/2 inch movement. A free travel measurement close to the 1 1/2 inch

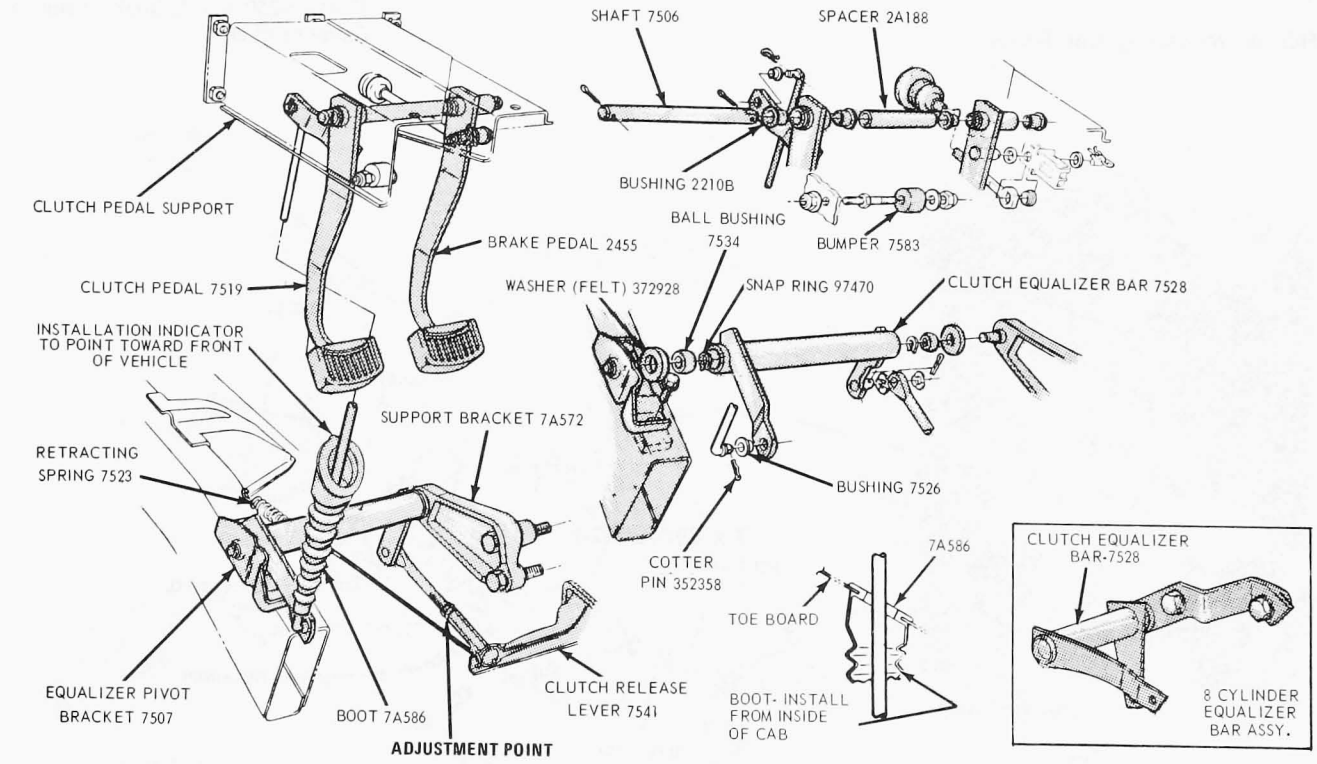

FIG. 7 Clutch Linkage—Bronco

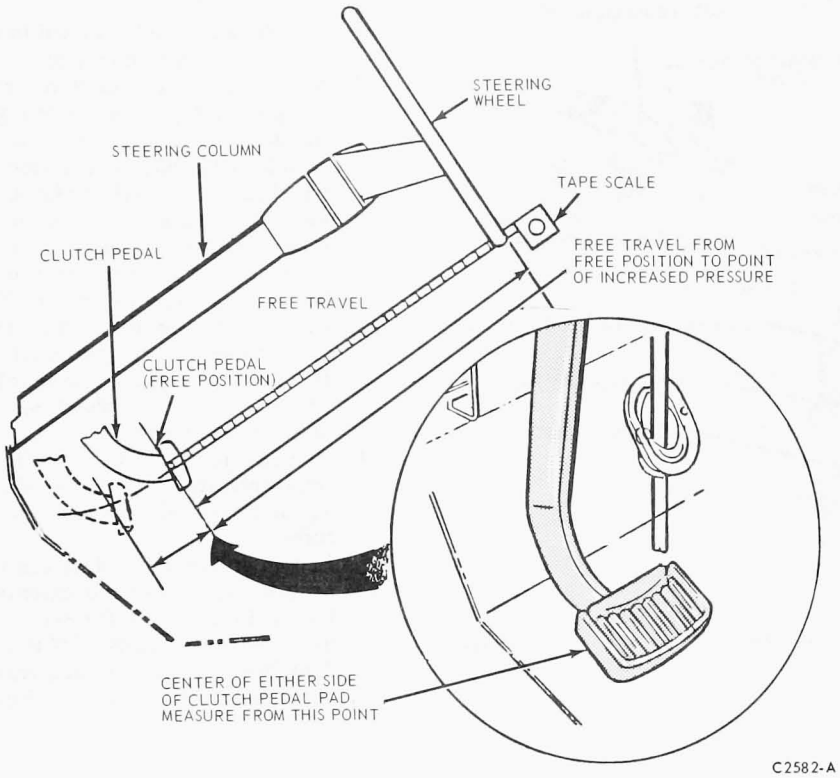

FIG. 8 Measuring Free Travel

measurement is more desirable.

6. With the recommended free travel obtained, and holding the first jam nut, position and securely tighten the second jam nut against the first jam nut.
7. Recheck the pedal free travel.

Pedal Reserve

1. Start the engine and with the clutch pedal in the engaged position, move the transmission shift lever into the reverse position until a slight gear raking noise is noted. Depress the clutch pedal gradually until the raking noise is gone and the shift lever slips into the reverse position without gear clash. Noting this dimension, continue to depress the clutch pedal to its full travel and note this dimension. The difference is the pedal reserve measurement. This reserve motion will vary with the engine used.

Spring Installation

1. Hook the short (reverse hook) end of the spring to the upper hole in the frame crossmember. Hook the long end hook into the release lever. On F-100-F-250 4 x 4, hook spring to frame bracket.

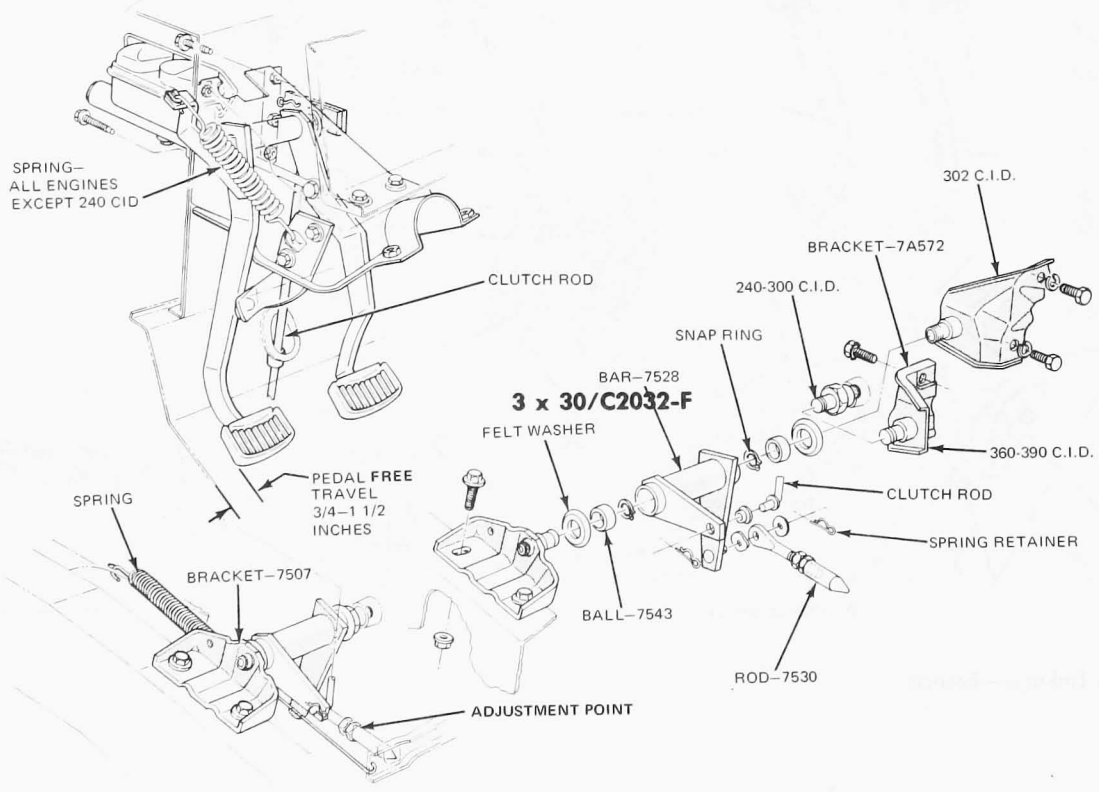

FIG. 9 F-100-350 Series Clutch

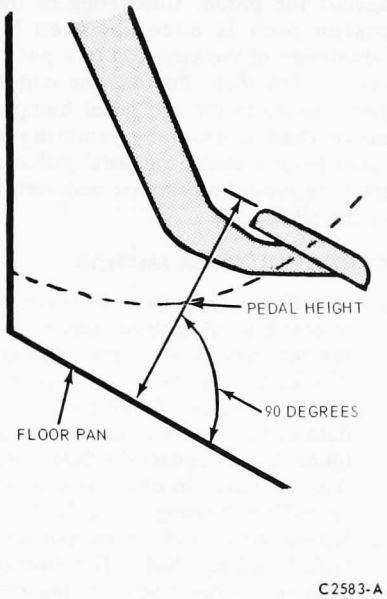

FIG. 10 Measuring Pedal Height

F-AND B-500 THROUGH 750 AND F-AND B-6000-7000

1. Adjust the clutch pedal stop to set total pedal travel within specification (Figs. 12 and 13). Torque the stop nut to specification.
2. On gas engine models, adjust the clutch pedal free travel to specification by backing off the jam nut and adjusting the spherical nut on the release push rod (Fig. 13). There should be 1/4 inch clearance between the spherical nut and the release lever. Make this adjustment with the retracting spring in place.
3. Tighten the jam nut.
4. On diesel engine models, adjust the clearance between the sleeve and lever as shown in Fig. 13. Clearance should be 1/8 inch.
5. Tighten the jam nut.

L-SERIES

A common pedal is used on all L-Series trucks (Fig. 14). Refer to Fig. 14 for instructions on adjusting pedal total travel and dimension locations for installation and free pedal measurements.

Refer to the appropriate illustrations (Figs. 15 through 21), for linkage and clutch free pedal adjustments. Note that it is not necessary to set the total clutch linkage each time the clutch is adjusted for pedal free travel. Also note that double disc Spicer type clutches are adjusted **internally** for pedal free travel. **This procedure must be used on these clutches to prevent premature clutch failure.**

W-SERIES

1. Adjust the clutch pedal stop to permit total pedal travel of 10 15/32 to 10 31/32 inches (Fig. 22). Torque the bracket attaching bolts to specifications.
2. Adjust the clutch pedal over-center assist spring by means of the spherical locking nut to provide a spring length of 7 3/16-7 5/16 inches for 500 pound clutch and 6 15/16-7 1/16 inches for 420 pound clutch. This distance should be measured inside of the spring eye ends (Fig. 23). When making the spring adjustment, hold the spring retainer from rotating and make certain the assist spring and anchor re aligned at right angles as shown in Fig. 22. When adjusting the assist

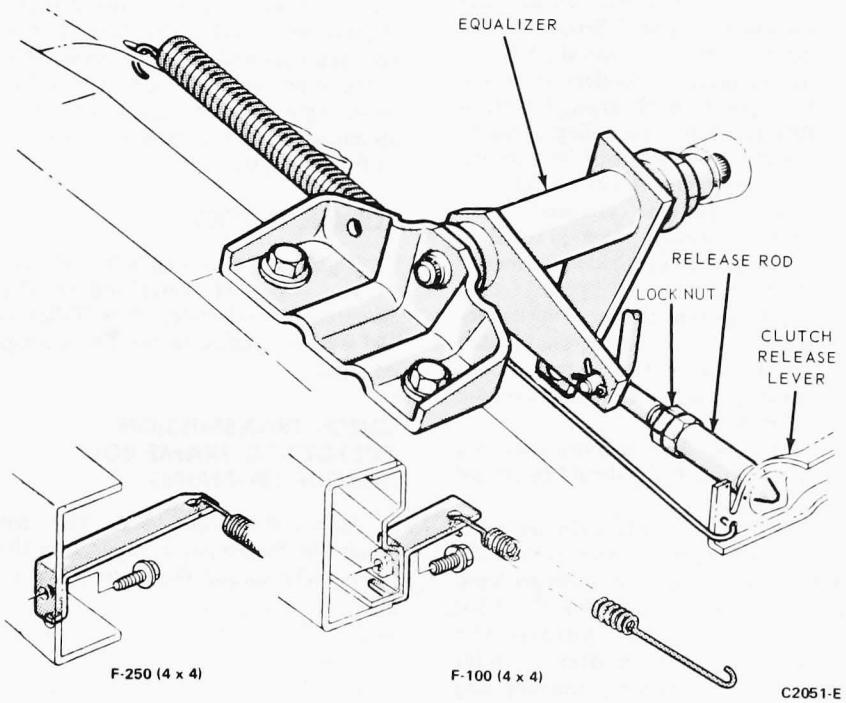

FIG. 11 Clutch Pedal Free Travel Adjustments—F-100-350 Series

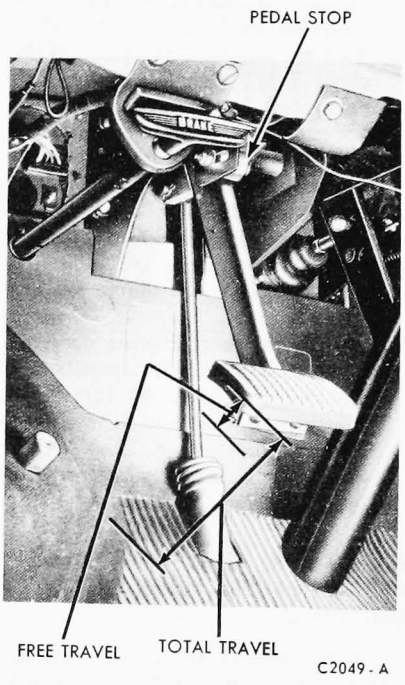

FIG. 12 Clutch Pedal Travel

spring anchor, use a deep socket wrench to avoid damaging the plastic-insert lock nut.

3. Adjust the vertical tension rod turnbuckle so that the lever (Fig. 22) is perpendicular to the top of the frame. This adjustment is to be made with the cab in the locked position and a 1/4 inch diameter aligning pin installed in the lever. After the adjustment, position the thin section of the turnbuckle toward the body sheet metal so as to provide maximum clearance between the sheet metal and radiator side support. Do not remove the aligning pin at this time.
4. With another 1/4 inch diameter aligning pin inserted through the frame bracket and outer equalizer lever, check the inner equalizer lever to be sure it is perpendicular to the top of the frame. If the lever is not perpendicular, adjust the rod length as required. Remove both aligning pins.
5. Position the linkage return spring clip to the dimension shown in Fig. 22.
6. Disconnect the equalizer rod at the clutch housing cross-shaft lever.
7. While holding the clutch housing cross-shaft lever in the rearward position, adjust the length of the equalizer rod so that the hole in the clevis and the hole in the cross-shaft lever are aligned. Then, back off the clevis 7 1/2 turns and rotate the cross-shaft lever forward. Connect the equalizer rod at the cross-shaft lever and tighten the lock nuts at all the clevis connections. The resulting clutch pedal free travel will be approximately 1 3/8-1 1/2 inches, corresponding to a 1/2 inch free bearing lash at the clutch bearing hub.
8. With linkage correctly set, make all further service adjustments for clutch facing wear by internally adjusting the clutch to the specified 1/2 inch clearance. This action should automatically restore the specified pedal free travel.

CHECK AND ADJUST CLUTCH PEDAL TRAVEL—HYDRAULIC CLUTCH

Before making any adjustments, be sure that the system is free of air and that the master cylinder fluid is at the specified level.

P-350-400

Adjust the clutch slave cylinder push rod per the instructions shown in Fig. 24.

P-500

Adjust the clutch master cylinder and slave cylinder push rods per the instructions shown in Fig. 25.

C-SERIES

Adjust the C-Series clutch pedal and clutch slave cylinder per the instructions shown in Fig. 26.

CLUTCH HYDRAULIC SYSTEM BLEEDING METHOD—ALL VEHICLES

An effective and simplified method has been developed for bleeding clutch hydraulic systems with a minimum waste of hydraulic clutch fluid. Instructions are given below:

PRESSURE TANK BLEEDING

1. Connect a transparent bleeder hose to the pressure tank hose connector. Attach the bleeder hose to the slave cylinder bleeder screw and fill the empty cylinders.
2. Adjust the pressure tank fluid flow so that the master cylinder does not fill too fast. The C-Series cylinder can be filled faster than the P-Series model master cylinders since the relief port is much larger. Too fast a flow rate will cause spillage, because a stream of fluid will be expelled from the small relief port of conventional type cylinders.
3. Close the bleeder screw on the slave cylinder when the fluid in the master cylinder reservoir is approximately 1/2 inch from the top. No further bleeding should be necessary, since all the air in the system would exhaust through the master cylinder relief port.
4. Check the slave cylinder push rod total travel, which should be at least 1 1/8 inch.

The clutch master cylinder relief port must be open in order to bleed the system. Clutch master cylinder push rod lash of 1/4 inch is required on the P-500 series vehicles to permit the conventional type master cylinder piston to return to the piston stop ring and open the relief port. The clutch master cylinder cannot be adjusted on the P-350 and 400 series vehicles. In C-Series master cylinders, the O-ring seal on the end of the push rod must not seat against the piston. Uncovering of the piston port is accomplished by adjustment of the push rod to a piston lash of 1/4 inch. Forcing the clutch pedal to compress the pedal bumper more than normal by jamming a screwdriver between the pedal pad and the floor insures a complete uncovering of the relief port.

GRAVITY BLEEDING METHOD

1. Attach a funnel to a transparent bleeder hose. Attach the hose to the bleeder screw of the slave cylinder. The funnel must be higher than the master cylinder. Pour hydraulic fluid in the funnel as the system is filling. Do not agitate the fluid more than necessary in order to prevent air bubbles forming in the fluid.
2. Repeat steps 3 and 4 as for pressure tank bleeding. **Note: The funnel method requires caution to prevent air entering the fluid as the system is being filled.**

CHECK TRANSMISSION AND AUXILIARY TRANSMISSION MOUNTINGS

Occasionally, the transmission and auxiliary transmission mountings should be visually checked. If the vehicle is operated on rough terrain, this check should be made frequently. If the mounting bolts are loose, torque them to specifications. If the insulators are worn or frayed, replace them.

TORQUE CHECKS

Tighten all attaching bolts and nuts at the intervals outlined in the Maintenance Schedules (Part 50-02) to the torque specified in the Truck Shop Manual.

CHECK TRANSMISSION SUPPORT-TO-FRAME BOLT TORQUE (W-SERIES)

Check the torque of the bolt that holds the transmission support to the frame. The torque should be 50-62 ft-lbs.

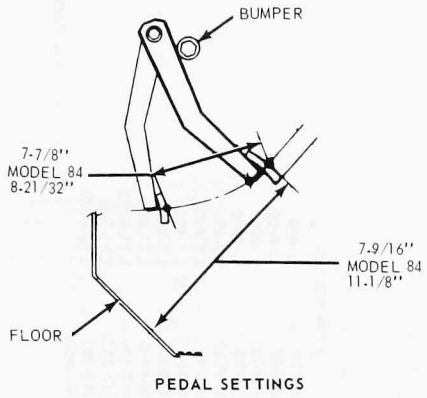

PEDAL SETTINGS

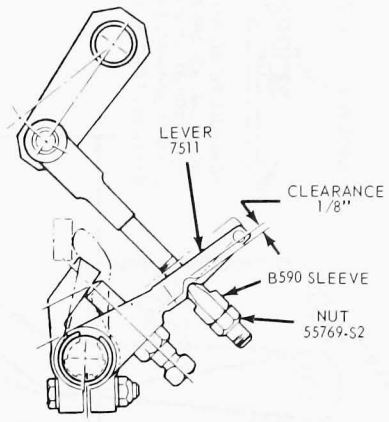

ADJUSTMENT POINT – DIESEL ENGINE
F- AND B-6000–7000

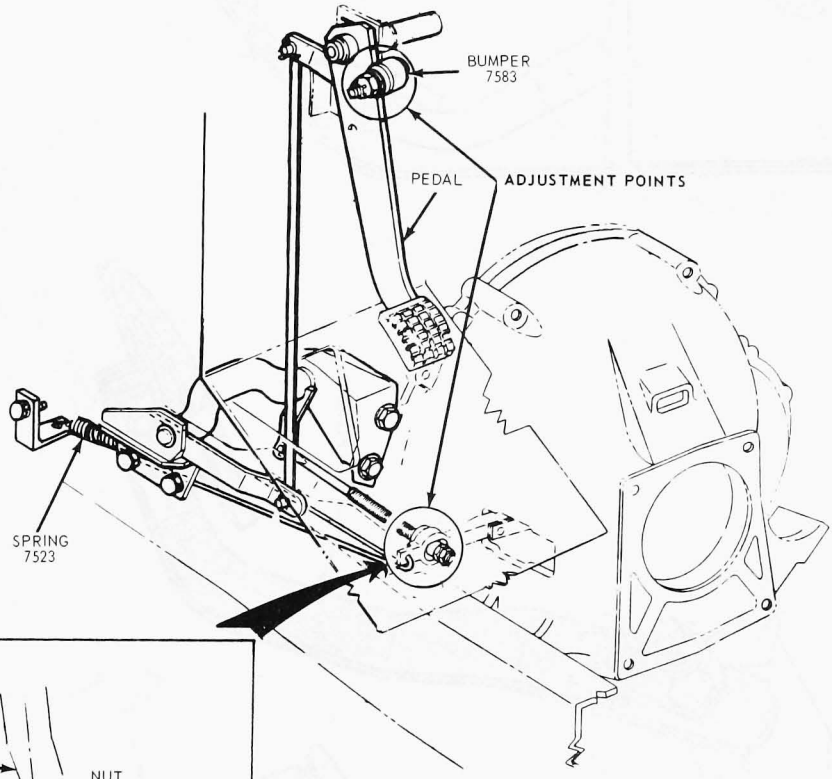

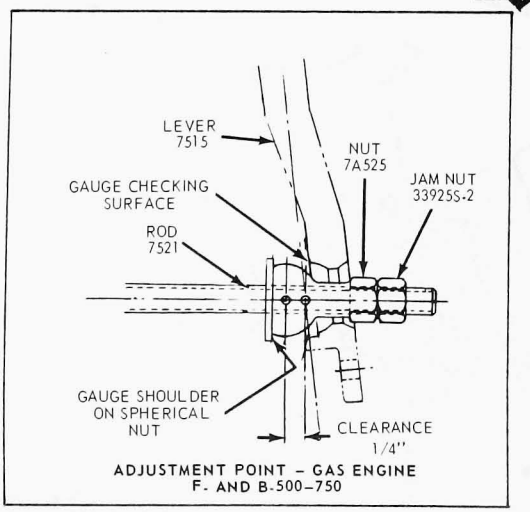

ADJUSTMENT POINT – GAS ENGINE
F- AND B-500–750

C2605-A

FIG. 13 Clutch adjustments—F-and B-500 through 750 and F-and B-6000-7000

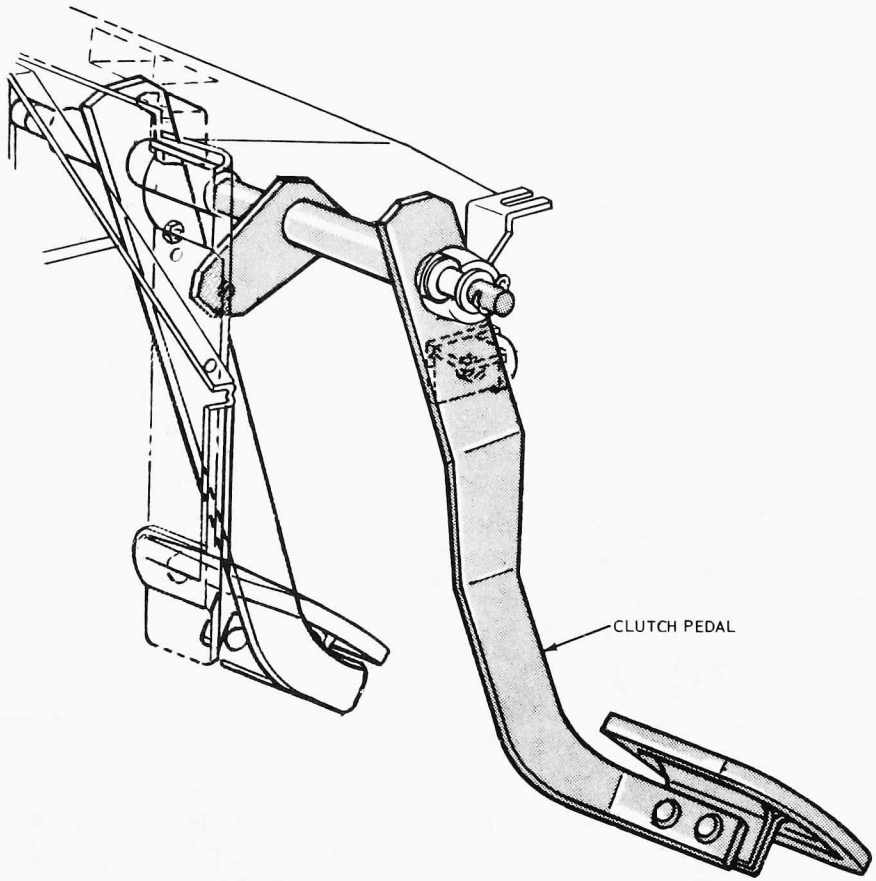

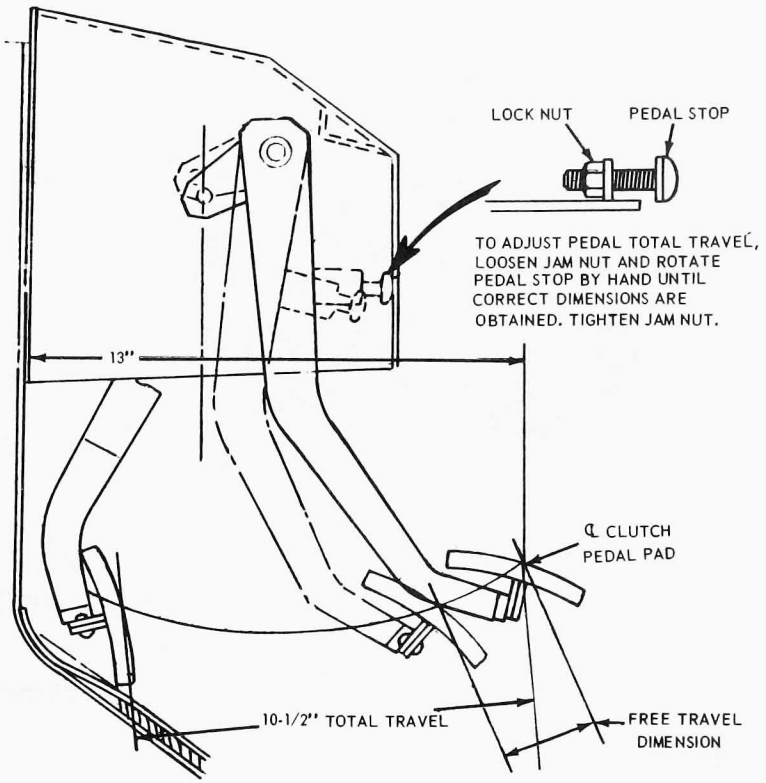

APPLIES TO:

LN-500	L-800
LN-600	L-8000
LN-6000	L-900
LN-700	L-9000
LN-7000	LT-800
LN-750	LT-8000
LN-800	LT-900
LN-900	LT-9000
LN-9000	LTS-800
LNT-800	LTS-8000
LNT-8000	LTS-900
LNT-900	LTS-9000
LNT-9000	

C2598-A

FIG. 14 Clutch Pedal All L-Series

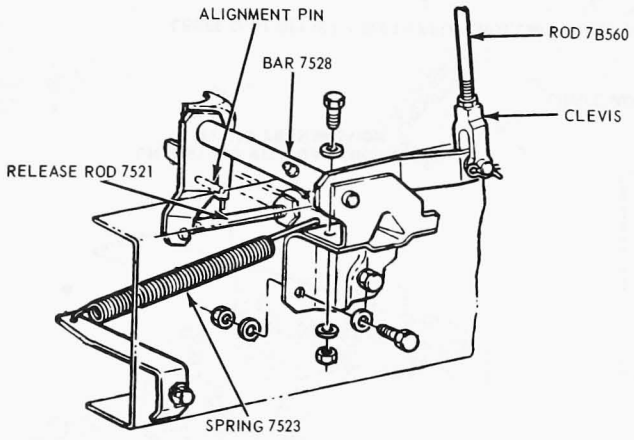

LN-, LNT-800 WITH MODELS 280, 542, OR 5000 TRANSMISSIONS

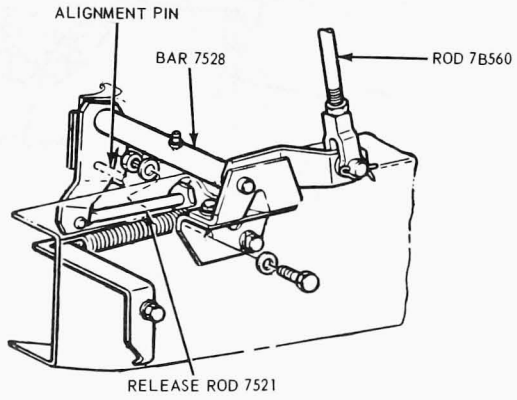

LN-600-750 WITH MODELS 280, 542, T-19, 435 AND 5000 TRANSMISSIONS

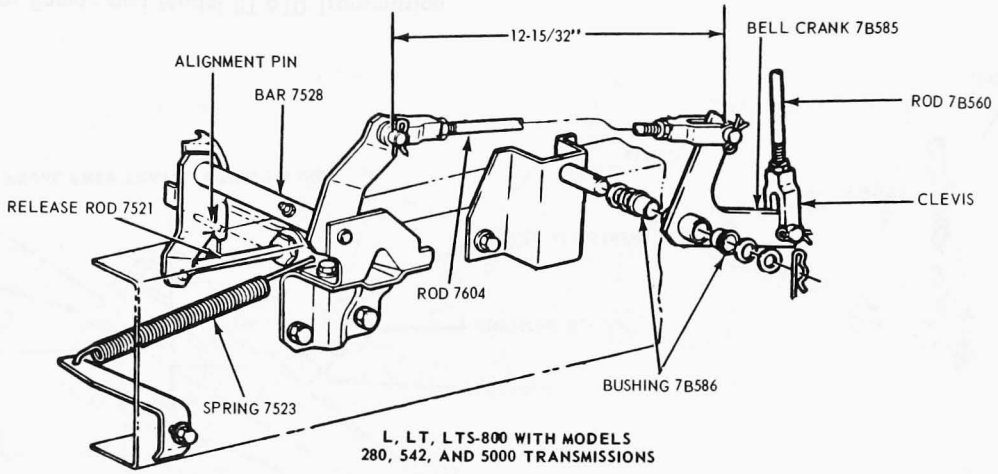

L, LT, LTS-800 WITH MODELS 280, 542, AND 5000 TRANSMISSIONS

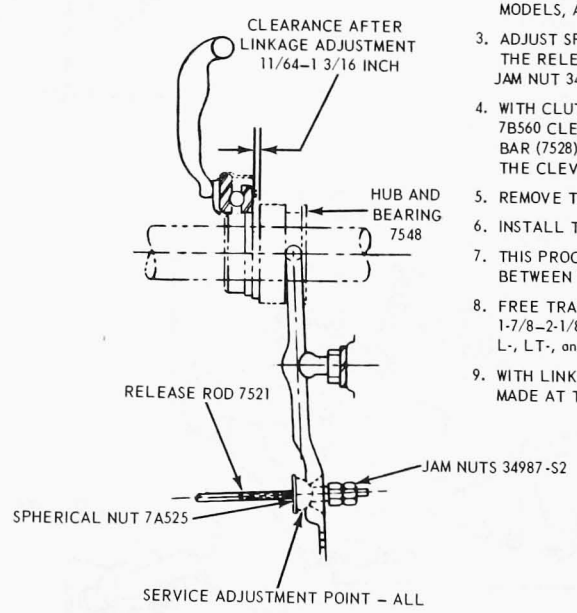

1. ADJUST CLUTCH PEDAL TOTAL TRAVEL. DISCONNECT CLUTCH RETRACTING SPRING AND CLUTCH ROD 7B560.
2. INSTALL 0.25 GAUGE PIN AS SHOWN. ON L, LT, AND LTS-800 MODELS, ADJUST ROD 7604 TO DIMENSION SHOWN.
3. ADJUST SPHERICAL NUT 7A525 TO REMOVE ALL LASH BETWEEN THE RELEASE BEARING AND THE CLUTCH FINGERS. TIGHTEN JAM NUT 34987-S2.
4. WITH CLUTCH PEDAL HELD AGAINST ITS STOP, ADJUST CLUTCH ROD 7B560 CLEVIS UNTIL THE CLEVIS PIN FITS FREELY THROUGH THE BAR (7528) OR BELLCRANK (7B585). LENGTHEN THE ROD BY TURNING THE CLEVIS 5 FULL TURNS.
5. REMOVE THE GAUGE PIN AND INSTALL THE CLUTCH ROD 7B560.
6. INSTALL THE RETRACTING SPRING.
7. THIS PROCEDURE SHOULD GIVE A CLEARANCE OF 11/64– 3/16 INCH BETWEEN THE RELEASE BEARING AND THE CLUTCH FINGERS.
8. FREE TRAVEL AT CENTER OF CLUTCH PEDAL PAD SHOULD BE 1-7/8–2-1/8 INCH FOR LN-750 AND 2-1/4–2-1/2 INCH FOR LN-, LNT-, L-, LT-, and LTS-800 MODELS.
9. WITH LINKAGE CORRECTLY SET, ALL SERVICE ADJUSTMENTS ARE MADE AT THE CLUTCH RELEASE LEVER.

FIG. 15 Clutch and Linkage—LN-500 to 800; L-, LT-, LNT-, LTS-800 with Gas Engines

C 2592-A

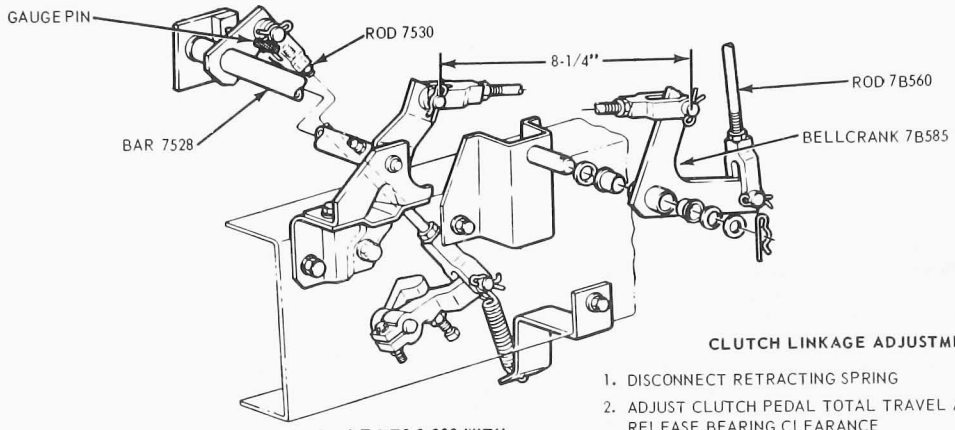

L-, LT-LTS-8 900 WITH GAS ENGINE AND RT-610

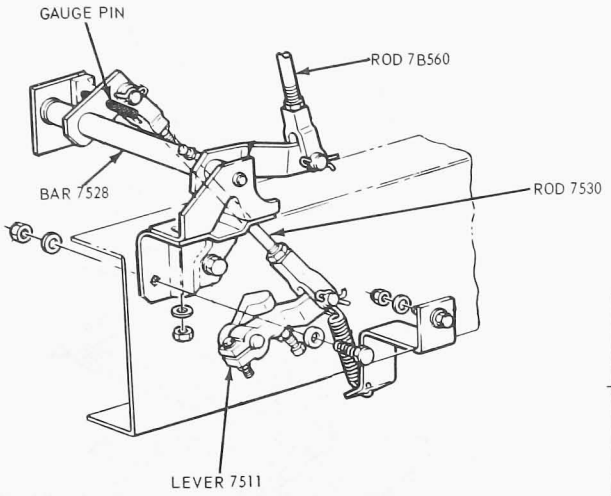

LN, LNT-900 WITH GAS ENGINE AND RT-610 TRANSMISSION

CLUTCH LINKAGE ADJUSTMENT

1. DISCONNECT RETRACTING SPRING
2. ADJUST CLUTCH PEDAL TOTAL TRAVEL AND CLUTCH RELEASE BEARING CLEARANCE
3. DISCONNECT CLUTCH ROD 7B560 AT EQUALIZER BAR 7528 AND INSTALL 0.25 INCH GAUGE PIN AS SHOWN
4. ADJUST ROD 7530 TO SECURE ZERO RELEASE BEARING LASH WHERE APPLICABLE. BE SURE BAR-TO-BELL CRANK ROD DIMENSION IS AS SHOWN
5. WITH THE PEDAL HELD AGAINST ITS STOP, ADJUST CLUTCH ROD 7B560 UNTIL THE CLEVIS PIN FITS FREELY IN BAR 7528
6. REMOVE THE ALIGNMENT PIN.
7. LENGTHEN CLUTCH ROD 7B560 5 TURNS AND CONNECT TO BAR 7528. CONNECT RETRACTING SPRING.
8. CHECK RELEASE BEARING CLEARANCE, WHICH SHOULD BE AS SHOWN. IT IS NOT NECESSARY TO ADJUST CLUTCH LINKAGE EACH TIME THE PEDAL FREE TRAVEL IS ADJUSTED. MAINTAIN PEDAL FREE TRAVEL BY ADJUSTING AT THE POINT SHOWN.

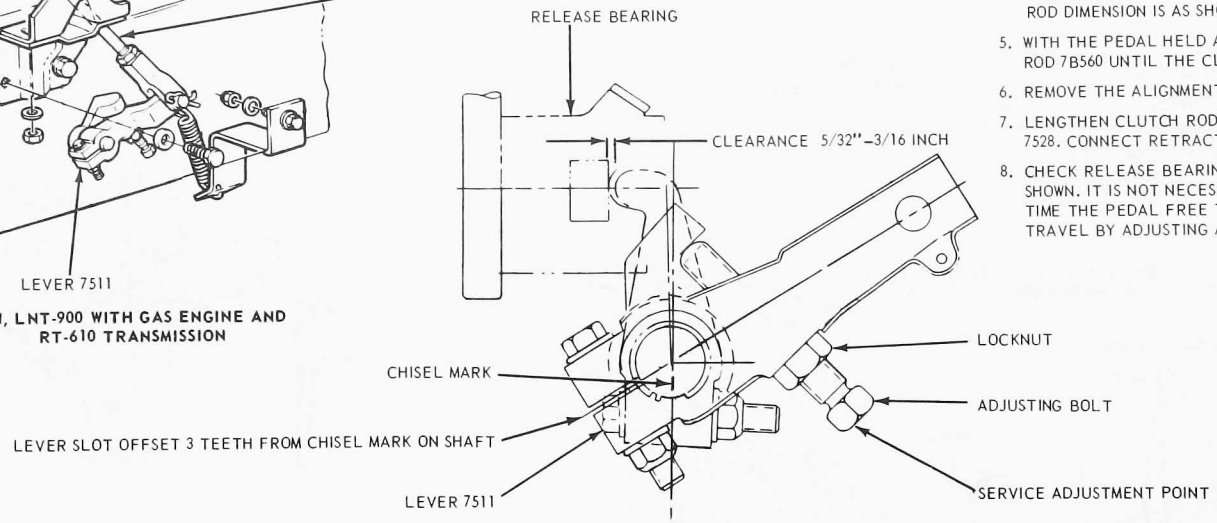

PEDAL FREE TRAVEL 1-7/8-2-1/8 INCH

FIG. 16 Clutch and Linkage L-, LN-, LT-, LNT-, LTS-900 With Gas Engine and Model RT-610 Transmission

C 2594-A

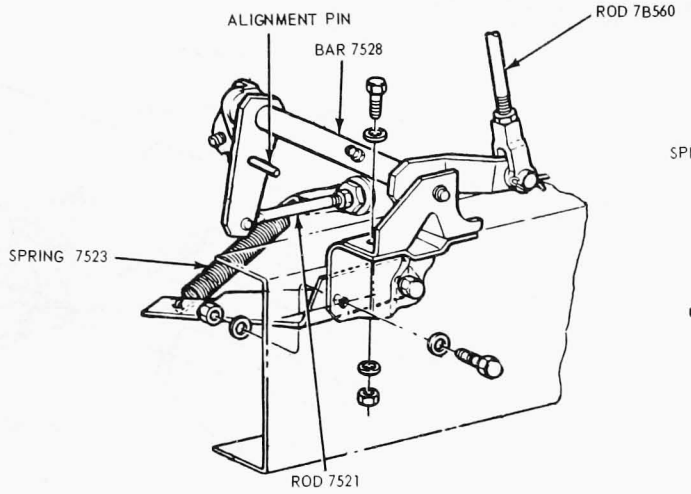

LN- LNT-900 WITH SUPER DUTY ENGINE AND 380, 5000-6000 SERIES TRANSMISSIONS

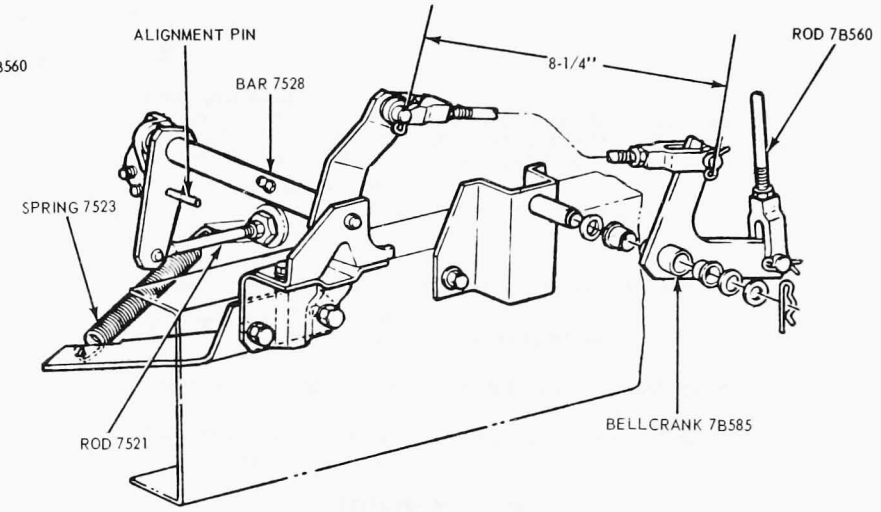

L-, LT- AND LTS-900 WITH SUPER DUTY ENGINE AND 380, 5000-6000 SERIES TRANSMISSION

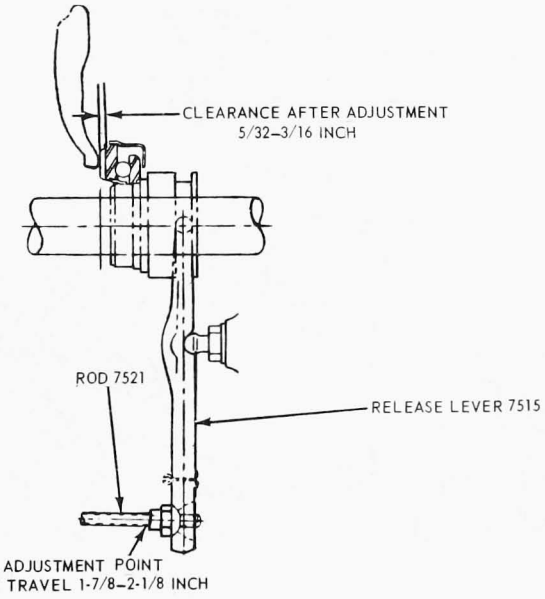

CLUTCH LINKAGE ADJUSTMENT

1. DISCONNECT RETRACTING SPRING 7523
2. ADJUST CLUTCH PEDAL TOTAL TRAVEL AND RELEASE BEARING CLEARANCE.
3. DISCONNECT CLUTCH ROD 7B560 AT EQUALIZER BAR 7528 AND INSTALL 0.25 INCH GAUGE PIN.
4. ADJUST ROD 7521 TO SECURE ZERO RELEASE BEARING LASH. BE SURE THAT BAR-TO-BELLCRANK ROD DIMENSION IS AS SHOWN (WHERE APPLICABLE).
5. WITH THE PEDAL HELD AGAINST ITS STOP, ADJUST CLUTCH ROD 7B560 UNTIL THE CLEVIS PIN FITS FREELY IN EQUALIZER BAR 7528
6. REMOVE THE ALIGNMENT PIN.
7. LENGTHEN CLUTCH ROD 7B560 5 TURNS AND CONNECT TO EQUALIZER BAR 7528, CONNECT THE RETRACTING SPRING.
8. CHECK RELEASE BEARING CLEARANCE, WHICH SHOULD BE AS SHOWN. IT IS NOT NECESSARY TO ADJUST CLUTCH LINKAGE EACH TIME PEDAL FREE TRAVEL IS ADJUSTED. MAINTAIN PEDAL FREE TRAVEL BY ADJUSTING AT THE POINT SHOWN.

C-2593-A

FIG. 17 Clutch and Linkage—L-, LN-, LT-, LNT-, LTS-900 with Gas Engine and Models 380, 5000 or 6000 Transmissions

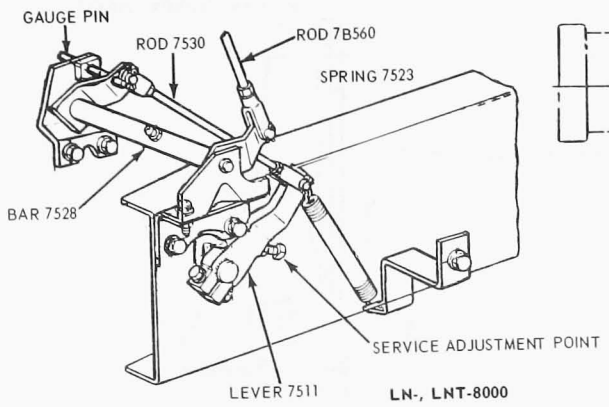

LN-, LNT-8000

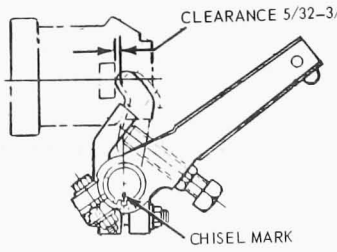

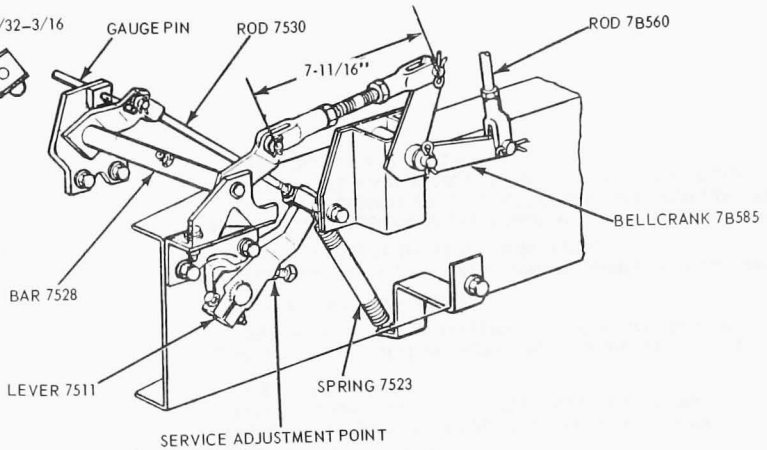

LN-, LNT-8000

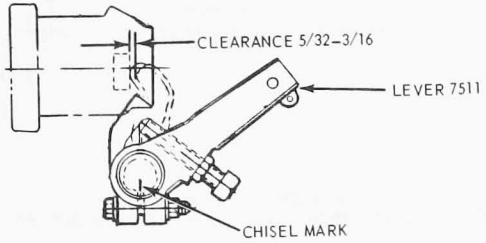

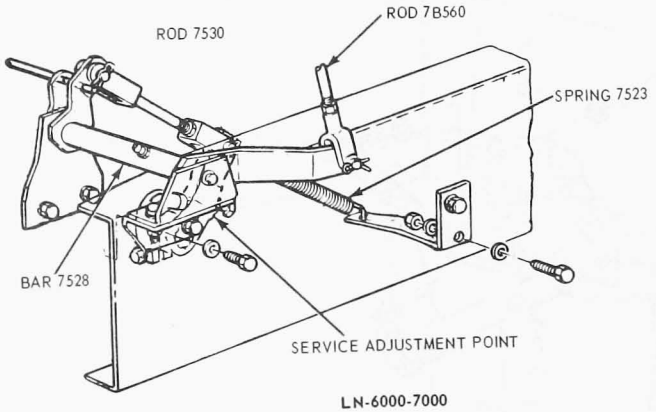

LN-6000-7000

CLUTCH PEDAL FREE TRAVEL 2-3/32 TO 2-5/16

CLUTCH LINKAGE ADJUSTMENT

1. DISCONNECT RETRACTING SPRING.
2. ADJUST CLUTCH PEDAL TOTAL TRAVEL AND RELEASE BEARING CLEARANCE.
3. DISCONNECT CLUTCH ROD 7B560 AT BAR 7528 AND INSTALL 0.25 INCH GAUGE PIN.
4. ADJUST ROD 7530 TO SECURE ZERO RELEASE BEARING LASH. BE SURE THAT BAR-TO-BELLCRANK DIMENSION IS AS SHOWN.
5. WITH THE PEDAL HELD AGAINST ITS STOP, ADJUST CLUTCH ROD 7B560 UNTIL THE CLEVIS PIN FITS FREELY IN BAR 7528.
6. REMOVE THE ALIGNMENT PIN.
7. LENGTHEN CLUTCH ROD 7B560 5 TURNS AND CONNECT TO BAR 7528. CONNECT RETRACTING SPRING.
8. CHECK RELEASE BEARING CLEARANCE, WHICH SHOULD BE AS SHOWN. IT IS NOT NECESSARY TO ADJUST CLUTCH LINKAGE EACH TIME THE PEDAL FREE TRAVEL IS ADJUSTED. MAINTAIN PEDAL FREE TRAVEL BY ADJUSTING AT THE POINT SHOWN.

C 2595-A

FIG. 18 Clutch and Linkage—LN-6000 and 7000, LNT-800 with Caterpillar Diesel Engine

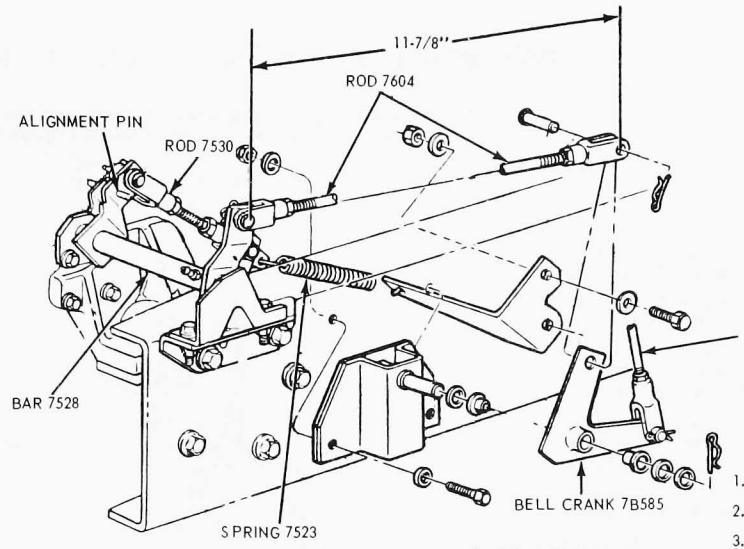

L, LT- AND LTS-8000

CLUTCH LINKAGE ADJUSTMENT

1. DISCONNECT RETRACTING SPRING AND ADJUST PEDAL TOTAL TRAVEL.
2. INTERNALLY ADJUST CLUTCH TO CLEARANCE SHOWN.
3. DISCONNECT CLUTCH ROD 7B560 AT EQUALIZER BAR 7528 AND INSTALL 0.25 GAUGE PIN AS SHOWN.
4. CHECK FOR ZERO RELEASE BEARING CLEARANCE. IF NOT, ADJUST RELEASE ROD 7530.
5. WITH PEDAL HELD AGAINST ITS STOP, ADJUST CLUTCH ROD 7B560 UNTIL CLEVIS AND PIN FIT FREELY INTO EQUALIZER BAR 7528.
6. LENGTHEN CLUTCH ROD 7B560 6 TURNS, REMOVE GAUGE PIN AND CONNECT CLUTCH ROD TO EQUALIZER BAR. TIGHTEN JAM NUTS.
7. CONNECT RETRACTING SPRING. PEDAL FREE TRAVEL SHOULD NOW BE TO SPECIFICATION.
8. WITH LINKAGE CORRECTLY SET, ALL PEDAL FREE PLAY ADJUSTMENTS MUST BE MADE BY INTERNALLY ADJUSTING THE CLUTCH.

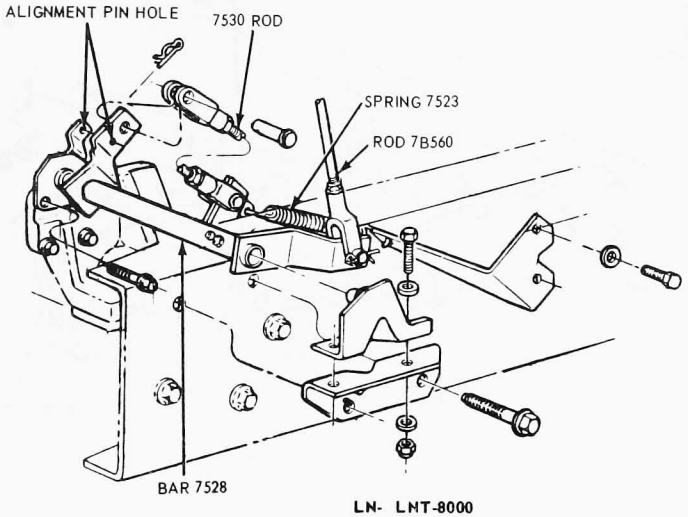

LN- LNT-8000

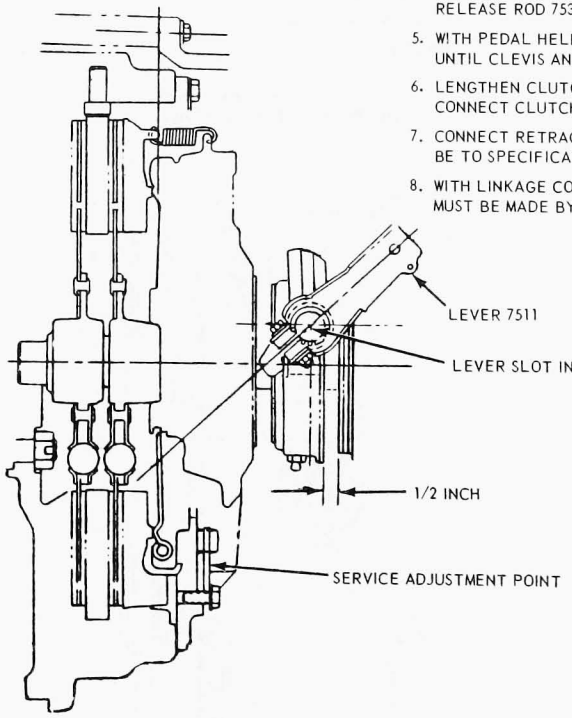

C 2599-A

FIG. 19 Clutch and Linkage—L-, LN-, LT-, LNT-, LST-8000 with 6V53 Diesel Engine

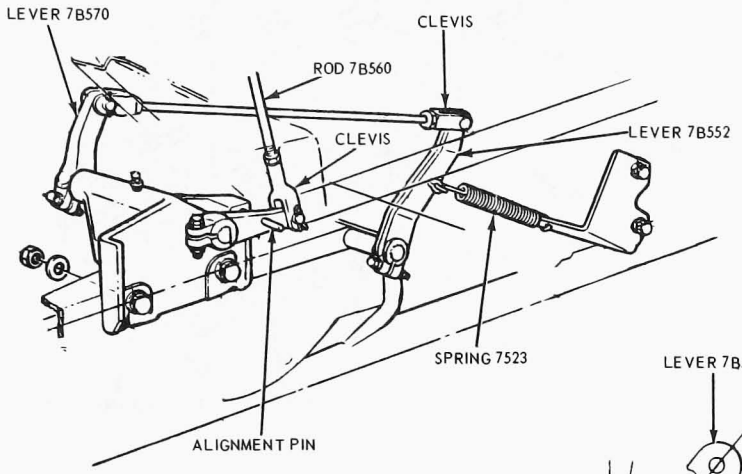

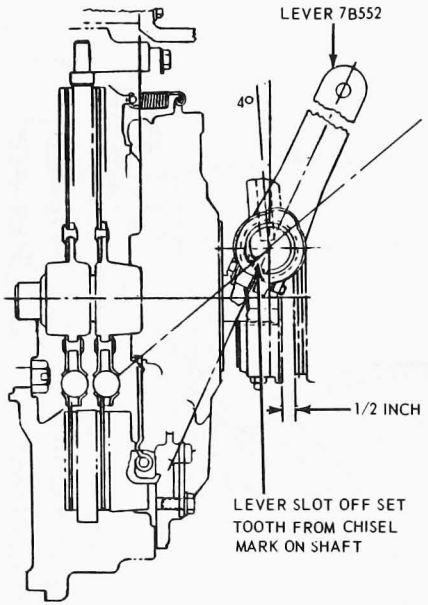

LN, LNT-9000 WITH MODELS 8552 AND 5H74 TRANSMISSIONS

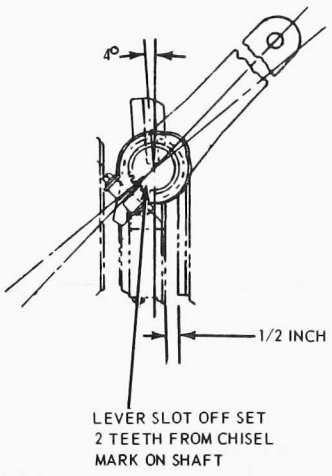

L, LT, LTS 9000 WITH MODELS 8552 AND 5H74 TRANSMISSIONS

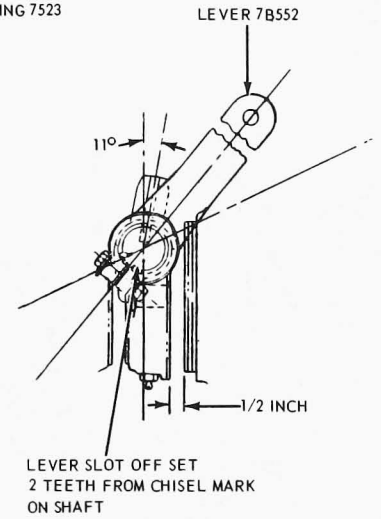

ALL MODELS USING T-905-A & B, RT, RTO-910 AND RTO-913 TRANSMISSIONS. RT-906 TRANSMISSION IN LN & LT MODELS

CLUTCH LINKAGE ADJUSTMENT

1. DISCONNECT RETRACTING SPRING AND ADJUST PEDAL TOTAL TRAVEL.
2. INTERNALLY ADJUST CLUTCH TO CLEARANCE SHOWN.
3. DISCONNECT CLUTCH ROD 7B560 AT EQUALIZER BAR 7528 ON BELLCRANK 7B585 AND INSTALL 0.25 GAUGE PIN AS SHOWN.
4. CHECK FOR ZERO RELEASE BEARING CLEARANCE. IF NOT, ADJUST RELEASE ROD 7530.
5. WITH PEDAL HELD AGAINST ITS STOP, ADJUST CLUTCH ROD 7B560 UNTIL CLEVIS AND PIN FITS FREELY INTO EQUALIZER BAR 7528 ON BELLCRANK 7B585.
6. LENGTHEN CLUTCH ROD 7B560 6 TURNS, REMOVE GAUGE PIN AND CONNECT CLUTCH ROD TO EQUALIZER BAR OR BELLCRANK. TIGHTEN JAM NUTS.
7. CONNECT RETRACTING SPRING. PEDAL FREE TRAVEL SHOULD NOW BE TO SPECIFICATION.
8. WITH LINKAGE CORRECTLY SET, ALL PEDAL FREE PLAY ADJUSTMENTS MUST BEMADE BY INTERNALLY ADJUSTING THE CLUTCH.

C 2597-A

FIG. 20 Clutch and Linkage—L-, LN-, LT-, LNT-, LTS-9000 with NH-Series or 6-71 Diesel Engines

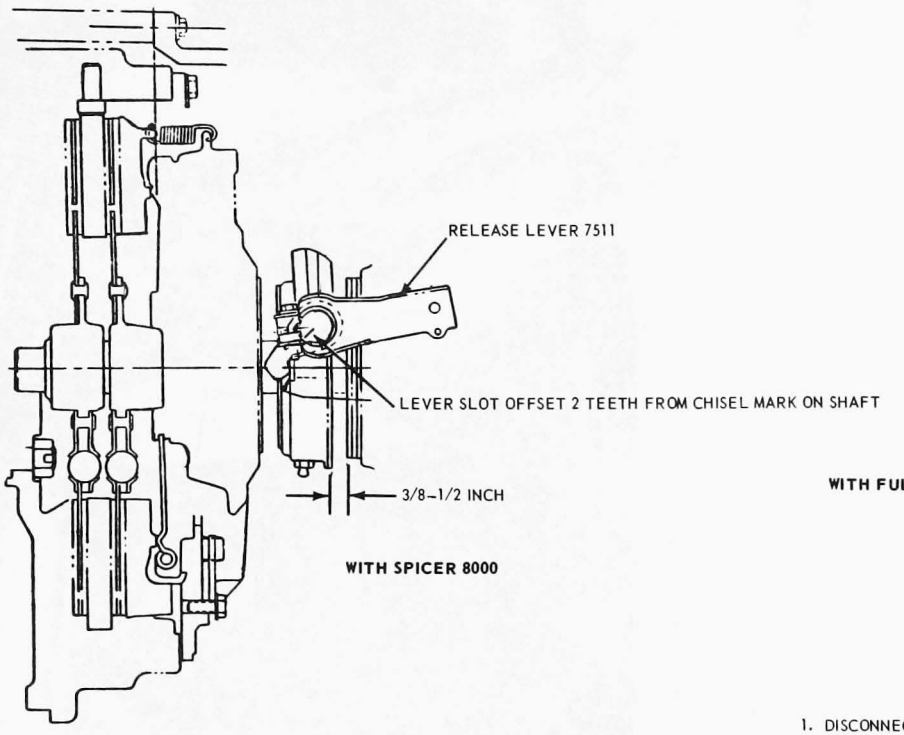

WITH SPICER 8000

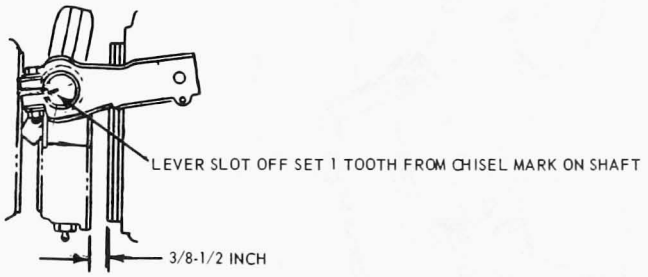

WITH FULLER T905-A & B, RT & RTO-910 AND RTO-913

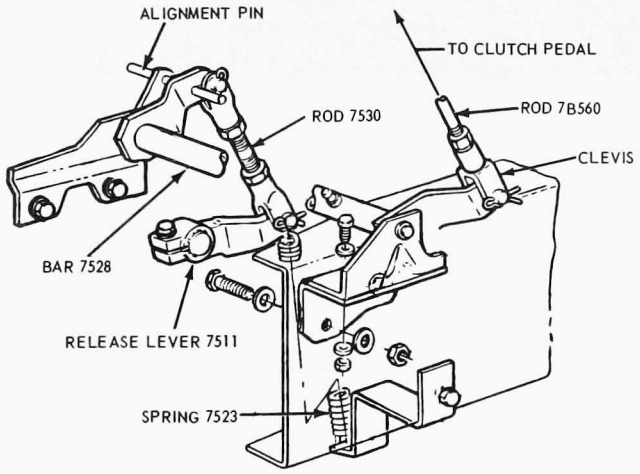

CLUTCH LINKAGE ADJUSTMENT

1. DISCONNECT RETRACTING SPRING AND ADJUST PEDAL TOTAL TRAVEL.
2. INTERNALLY ADJUST CLUTCH TO CLEARANCE SHOWN.
3. DISCONNECT CLUTCH ROD 7B560 AT EQUALIZER BAR 7528 AND INSTALL 0.25 GAUGE PIN AS SHOWN.
4. CHECK FOR ZERO RELEASE BEARING CLEARANCE. IF NOT, ADJUST R RELEASE ROD 7530
5. WITH PEDAL HELD AGAINST ITS STOP, ADJUST CLUTCH ROD 7B560 UNTIL CLEVIS AND PIN FIT FREELY INTO EQUALIZER BAR 7528.
6. LENGTHEN CLUTCH ROD 7B560 6 TURNS, REMOVE GAUGE PIN AND CONNECT CLUTCH ROD TO EQUALIZER BAR. TIGHTEN JAM NUTS.
7. CONNECT RETRACTING SPRING. PEDAL FREE TRAVEL SHOULD NOW BE TO SPECIFICATION.
8. WITH LINKAGE CORRECTLY SET, ALL PEDAL FREE PLAY ADJUSTMENTS MUST BE MADE BY INTERNALLY ADJUSTING THE CLUTCH.

C 2596-A

FIG. 21 Clutch and Linkage—L-, LT-9000 with 8V-71 or V-903 Diesel Engines

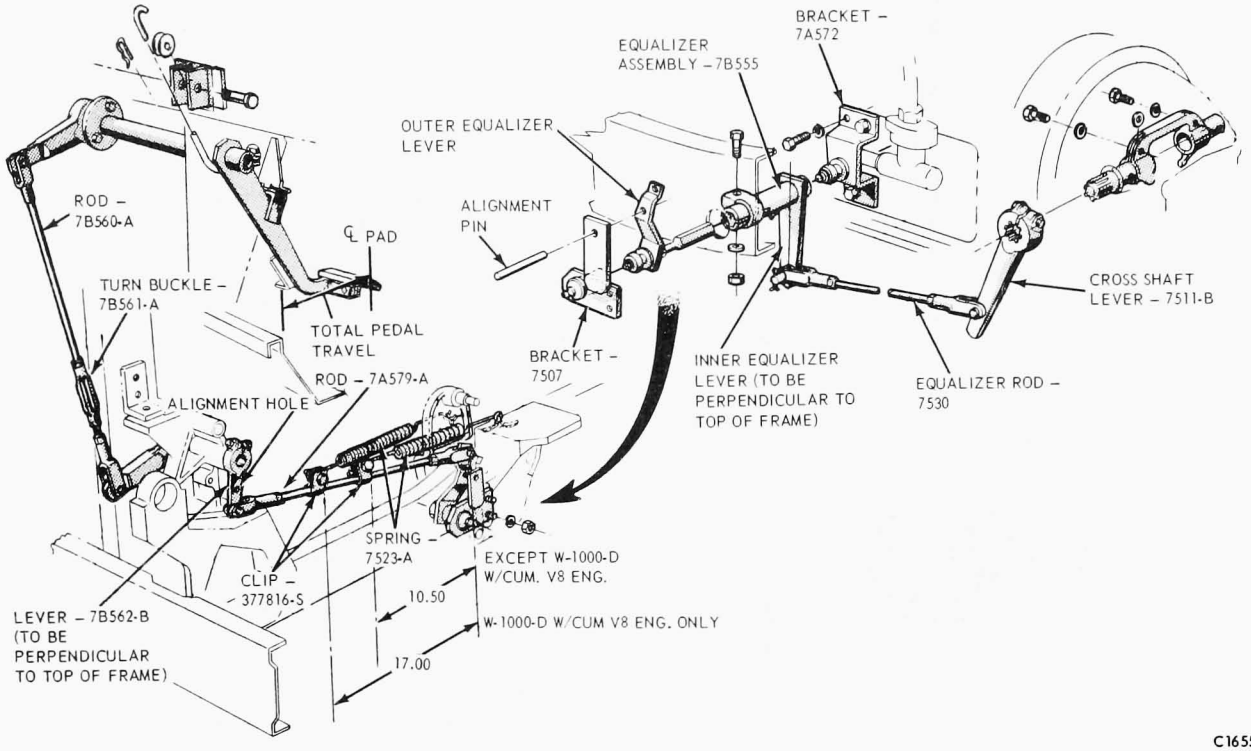

FIG. 22 Clutch Pedal Linkage Adjustment—W-Series

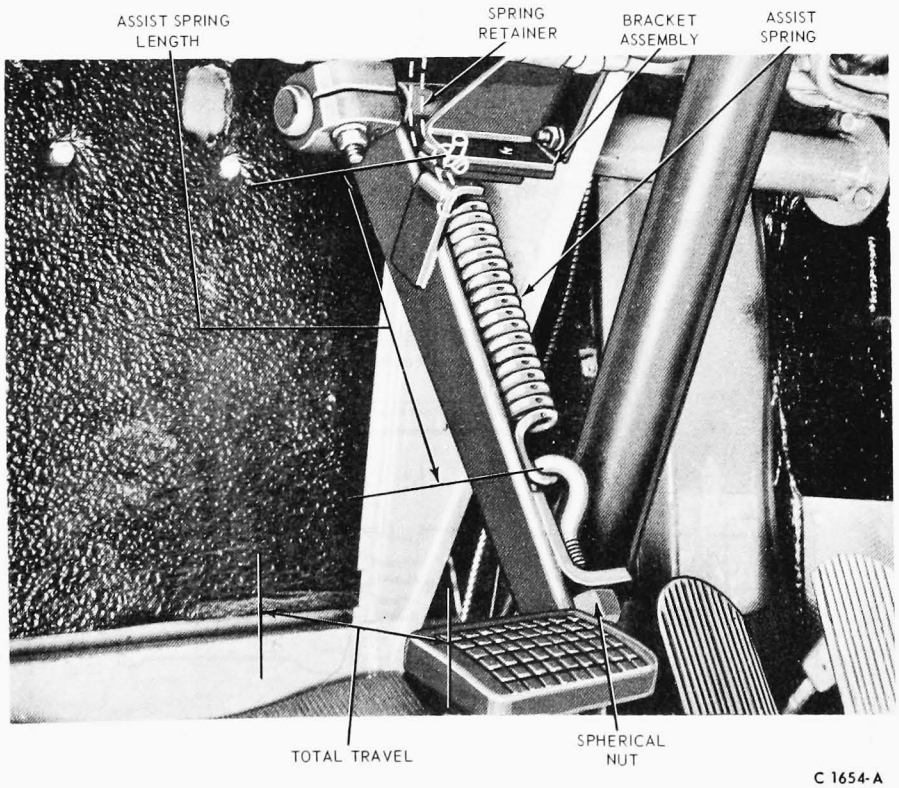

FIG. 23 Clutch Pedal and Assist Spring Adjustments—W-Series

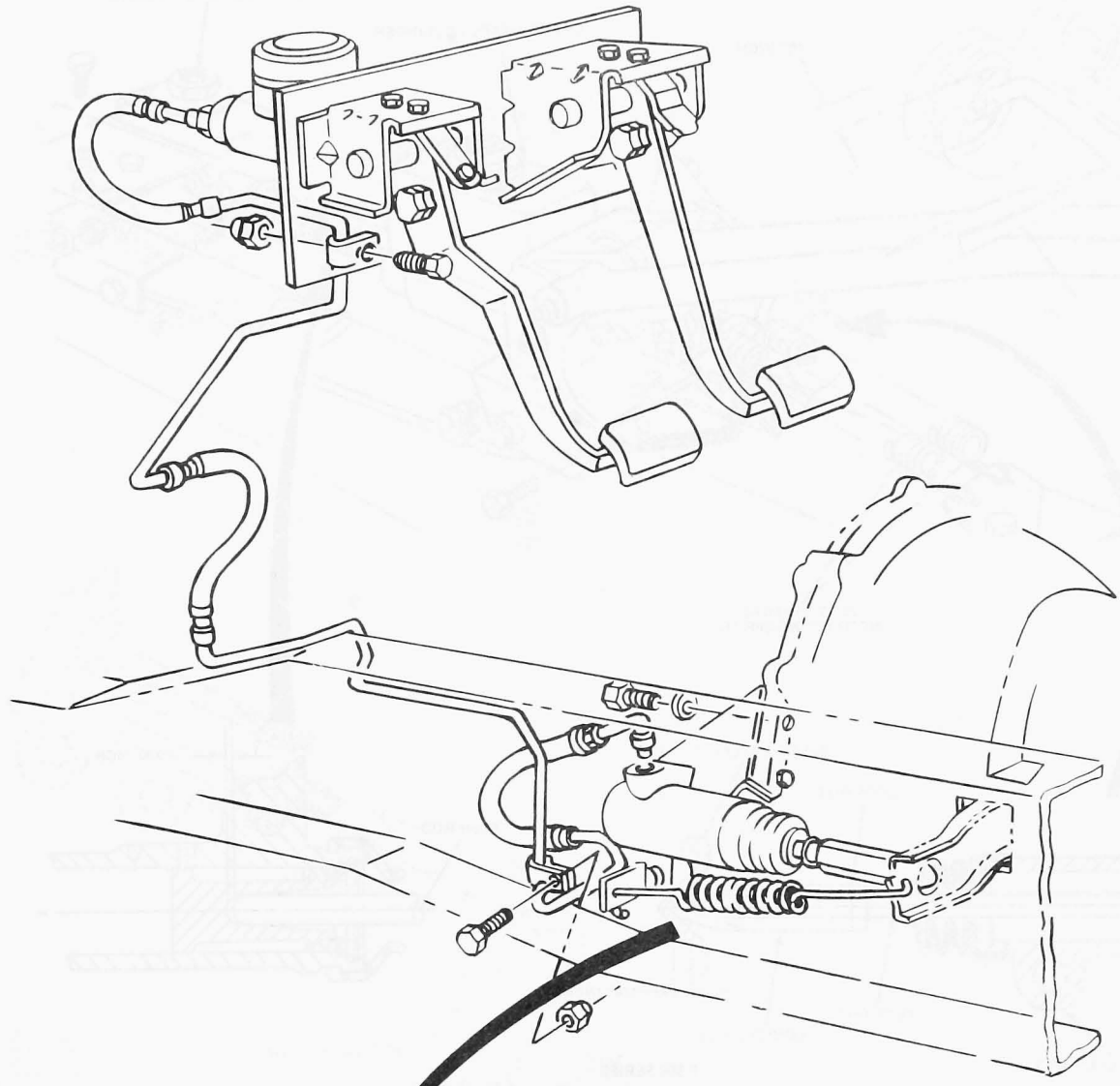

P-350–400 SERIES

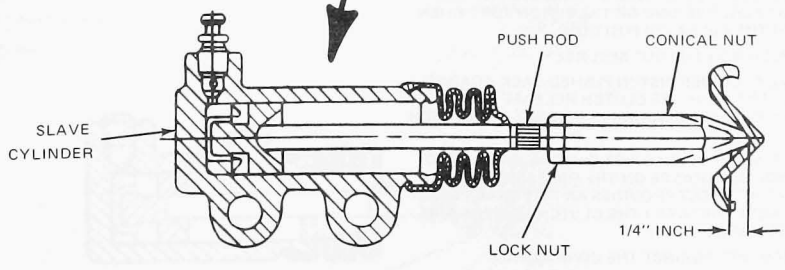

HYDRAULIC RELEASE SYSTEM ADJUSTMENT

PEDAL LASH IS CONTROLLED BY THE MASTER CYLINDER INSTALLATION AND IS NOT ADJUSTABLE.

SLAVE CYLINDER ADJUSTMENT

1. BOTTOM THE SLAVE CYLINDER PUSH ROD AGAINST THE INTERNAL STOP.
2. PUSH THE CLUTCH RELEASE LEVER BACK UNTIL THE RELEASE BEARING MAKES CONTACT WITH THE CLUTCH FINGERS.
3. ADJUST CONICAL NUT FOR 1/4 INCH CLEARANCE AS SHOWN.
4. TIGHTEN THE JAM NUT AGAINST THE CONICAL NUT.

C2603-A

FIG. 24 Clutch Free Travel Adjustment—P-350-400

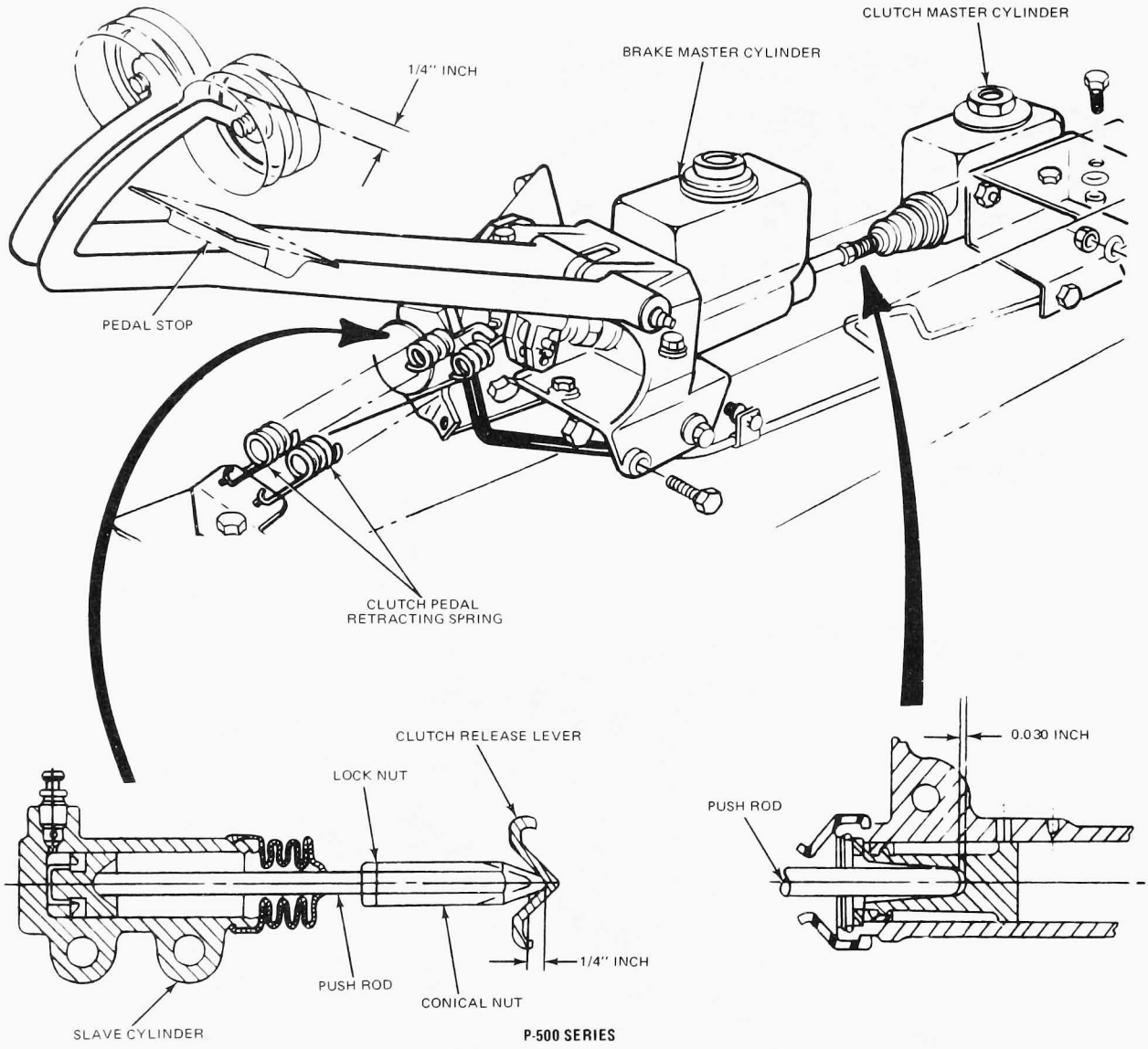

P-500 SERIES

CLUTCH PEDAL AND HYDRAULIC RELEASE SYSTEM ADJUSTMENT

1. WITH RETRACTING SPRING ATTACHED AND THE PEDAL AGAINST STOP, ADJUST THE MASTER CYLINDER PUSH ROD TO GIVE 1/4-INCH FREE PLAY, MEASURED AT THE PEDAL AS SHOWN. (THIS PROVIDES A PUSH ROD CLEARANCE OF 0.030 INCH AT THE PISTON TO ALLOW UNCOVERING OF THE PISTON PORT WHEN THE PEDAL IS IN THE RELEASED POSITION).
2. TIGHTEN THE PUSH ROD JAM NUT SECURELY.
3. WITH THE SLAVE CYLINDER PISTON PUSHED BACK AGAINST THE INTERNAL STOP, PUSH THE CLUTCH RELEASE LEVER BACK UNTIL THE RELEASE BEARING IS AGAINST THE CLUTCH FINGERS.
4. BACK OFF THE JAM NUT AND ADJUST THE CONICAL NUT TO OBTAIN A 1/4-INCH CLEARANCE ON THE RELEASE LEVER AS SHOWN. (THIS ADJUSTMENT PROVIDES AN INTERNAL CLEARANCE OF 0.120 INCHES BETWEEN THE CLUTCH FINGERS AND THE RELEASE BEARING.)
5. TIGHTEN THE JAM NUT AGAINST THE CONICAL NUT.

C2275-B

FIG. 25 Clutch Free Travel Adjustment—P-500

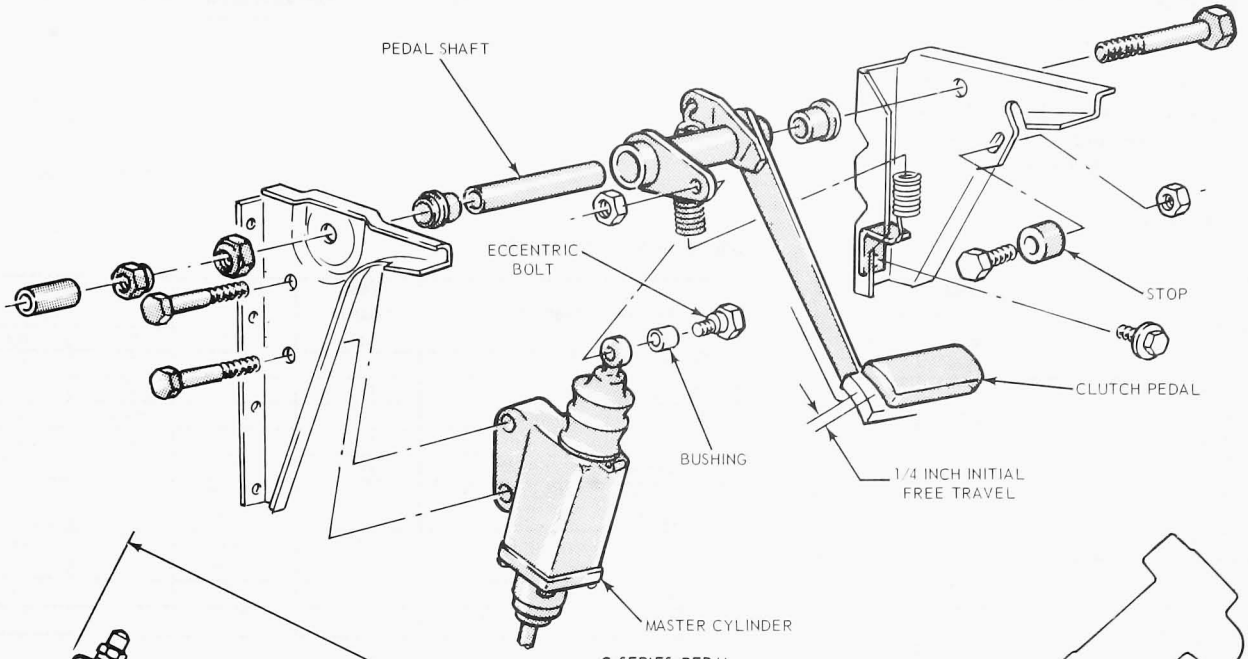

C-SERIES PEDAL

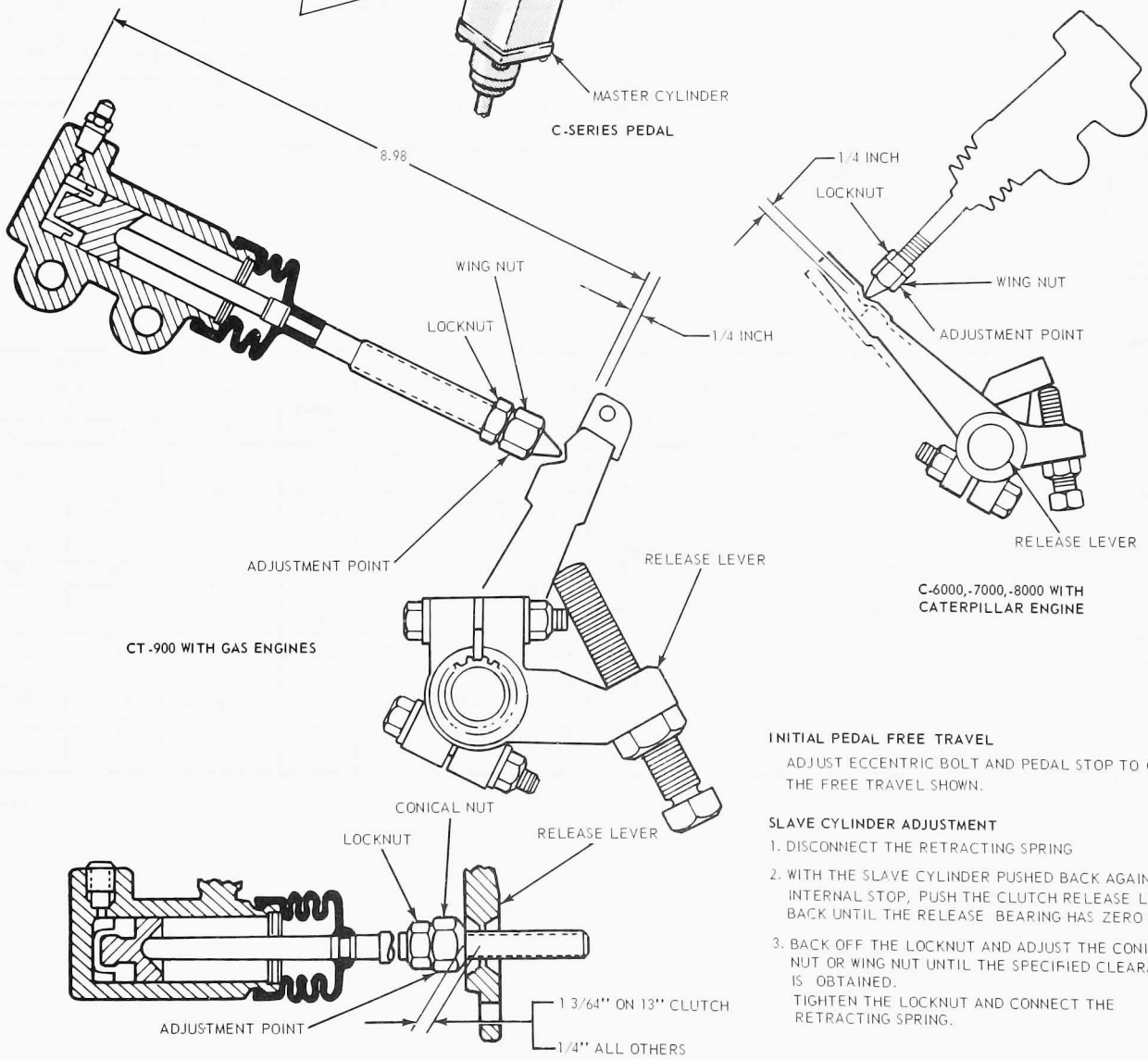

CT-900 WITH GAS ENGINES

CT-900 WITH GAS ENGINES AND 5000–6000 SERIES TRANSMISSION

C-6000,-7000,-8000 WITH CATERPILLAR ENGINE

INITIAL PEDAL FREE TRAVEL

ADJUST ECCENTRIC BOLT AND PEDAL STOP TO GIVE THE FREE TRAVEL SHOWN.

SLAVE CYLINDER ADJUSTMENT

1. DISCONNECT THE RETRACTING SPRING
2. WITH THE SLAVE CYLINDER PUSHED BACK AGAINST THE INTERNAL STOP, PUSH THE CLUTCH RELEASE LEVER BACK UNTIL THE RELEASE BEARING HAS ZERO LASH.
3. BACK OFF THE LOCKNUT AND ADJUST THE CONICAL NUT OR WING NUT UNTIL THE SPECIFIED CLEARANCE IS OBTAINED.
   TIGHTEN THE LOCKNUT AND CONNECT THE RETRACTING SPRING.

FIG. 26 Clutch Free Travel Adjustment—C-Series

C2101-B

SPECIFICATIONS

Refer to the 1973 Truck Specifications Book or Truck Shop Manual for any specifications or Special Tools not contained in this section.

BRONCO, ECONOLINE, 100–350 and P-SERIES

Transmission Type and Make	Approx. Cap.* (Pints)	
	U.S. Meas.	Imper. Meas.
3-Speed (Ford)		
Bronco & Econoline	3-1/2	3
100–350 & P-Series	4	3-1/2
3-Speed Heavy-Duty (Warner T-87-G)	5-1/2	4-1/2
4-Speed (Warner T-18-B)	7	5-1/2
4-Speed (New Process 435)	7	5-1/2
HD Cruise-O-Matic	22	18
C-4 Automatic	20-1/2	17
C-6 Automatic	25-1/2	21
4-Wheel Drive Transfer Case Single-Speed F-100 (Dana 21)	3-1/2	3
2-Speed Bronco (Dana 20)	2-3/4	2-1/4
2-Speed (F-100 and F-250 with Automatic Transmission) (NP-205)	4	3-1/2
2-Speed F-250 (Dana 24)	4-1/2	3-3/4

500–750 and 6000–7000 SERIES

Transmission Type and Make	Filler Location (b)	Drain Location (b)	Approx. Capacity	
			U.S.	Imp.
5-Speed (Spicer 5652)	Rt	L	13	11
5-Speed (Spicer 5756-B)	Rt	L	18	11
4-Speed (New Process) NP-435	Rt	L	6-1/2	5-1/8
4-Speed Warner T-19	Rt	Rt	6-1/2	5-3/8
5-Speed (New Process) NP-542	Rt	Rear	9	7-1/2
5-Speed Heavy Duty (Clark 280, 282, 285)	Rt	Center Rear	8	6-5/8
5-Speed Extra Heavy-Duty (Clark 385, 387)	Rt	Center Rear	13	11
10-Speed Fuller (RT-610)	L	B	12	10
4-Wheel Drive Transfer Case (F-600)	Ft	Center	6	5

(b) Rt – Right L – Left B – Bottom Ft – Front

800–900 and 8000–9000 SERIES

Transmission Type and Make	Filler Location (b)	Drain Location (b)	Approx. Capacity (Pts.)	
			U.S.	Imp.
3-Speed Auxiliary (Spicer 5831)	Rt	L	4	3-3/8
3-Speed H.D. Auxiliary				
(Spicer 8031-C)	Rt	L	12	10
(Spicer 7231-B & D)	Rt	L	8	6-5/8
4-Speed Auxiliary (Spicer 7041)	Rt	L	11	9-1/8
(Spicer 8341-C)	Rt	L	12	10
5-Speed (Spicer 5652)	Rt	L	13	11
5-Speed (Spicer 5756-B)	Rt	L	13	11
5-Speed (Spicer 6453-A)	Rt	L	17	14
5-Speed Heavy-Duty (Clark 280, 282, 285)	Rt	Center Rear	8	6-1/2
5-Speed Extra Heavy-Duty (Clark 385, 387	Rt	Center Rear	13	10-1/2
5-Speed Extra Heavy Duty (Spicer 6352 & 6352-B)	L	BL	17	14
3-Speed (Spicer 6852-G)	Rt	L	17	14
16-Speed (Spicer 8516-3B & 8716-3A)			32	26-1/2
5-Speed (Spicer 8552-A)	L	L	24	20
10-Speed Fuller (Rt and RTO-910)	L	B	26	21-5/8
10-Speed Fuller (Rt-610)	L	B	12	10
5-Speed Fuller (5H-74 & 5HA-74)	Rt	B	22	18-3/8
5-Speed Fuller (T905-A & B)	L	B	22	18-3/8
Fuller RTO-9513	L	B	24	20

CY1390-B

MECHANICAL CLUTCH LINKAGE ADJUSTMENTS – (DIMENSIONS IN INCHES)

Models	Pedal Height	Total Travel	Free Travel
Bronco	6-3/4–7	6-3/4–7	3/4–1-1/2
Econoline	7-1/2–7-3/4	7-1/2–7-3/4	3/4–1-1/2
F-100-350	N.A.	N.A.	3/4–1-1/2
F- and B-500-750	7-9/16	7-7/8	1/4 ①
F- and B-6000-7000	7-9/16	7-7/8	1/8 ①
Model 84-Chassis and Cowl	11-1/8	8-21/32	1/4 ①
LN-600; L, LN, LT, LNT, LTS-800			2-1/4–2-1/2
LN-6000; L, LN, LT, LNT, LTS-8000 with Caterpillar Engine			2–2-1/4
LN-750			1-7/8–2-1/8
L, LN, LT, LNT, LTS-8000	13 ③	10-7/16	2–2-5/16 ②
L, LN, LT, LNT, LTS-900; SAE Housing			2–2-5/16
L, LN, LT, LNT, LTS-900; Ford Housing			1-7/8–2-1/8
L, LN, LT, LNT, LTS-9000			2–2-5/16 ②
L, LT-9000 w/8V-71 or V-903 Engine			2–2-1/4 ②
W-Series		10-1/2–11	1-3/8–1-1/2 ②

① Clearance of Release Lever
② Internally adjust clutch to maintain pedal free travel
③ Travel to Firewall

CC2159-D

PART 50-17 Automatic Transmission

COMPONENT INDEX	Page	COMPONENT INDEX	Page
LUBRICATION		C6 Automaitc Transmission	17-04
Detent Stop Assembly Lubrication – Transmatic Transmission	17-01	FMX Transmission	17-04
Fluid and Filter Element Replacement – Transmatic Transmission	17-01	Neutral Switch Adjustment – Automatic Transmission	17-03
Fluid Level Check		Shift Lever Operation and Position – Automatic Transmission	17-03
Automatic Transmission Except Transmatic	17-02	Transmission Mountings Check	17-03
Transmatic Transmission	17-03	PRE-DELIVERY	
Kickdown Linkage Lubrication – Automatic Transmission	17-01	Fluid Level Check	17-01
MAINTENANCE		Fluid Temperature Light Operation Check – Transmatic Transmission	17-01
Bands – Check and Adjust		Neutral Switch Operation Check	17-01
C4 Automatic Transmission	17-04	Retarder Operation Check	17-01
		Shift Timing and Quality Check	17-01
		SPECIFICATIONS	17-05

PRE-DELIVERY

NEUTRAL SWITCH—AUTOMATIC TRANSMISSIONS

Check, and adjust the switch if necessary, to start engine with shift lever in Neutral and Park position. If equipped with Transmatic transmission, adjust switch to start engine with the shift lever in Neutral position. Refer to the Maintenance Section for the band adjustment procedure.

CHECK AUTOMATIC TRANSMISSION FLUID LEVEL

Check the automatic transmission fluid level following the procedure given in the Lubrication Section of this Part.

FLUID TEMPERATURE LIGHT—TRANSMATIC

Check for proper operation of fluid temperature warning light. Correct as necessary.

RETARDER OPERATION—TRANSMATIC MT-SERIES ONLY

Operate retarder pedal and check for proper function. Correct as necessary.

SHIFT TIMING AND QUALITY

Check for smooth, acceptable and correctly timed up and down shifts, and correct if necessary.

LUBRICATION

LUBRICATE TRANSMATIC TRANSMISSION DETENT STOP ASSEMBLY—MT SERIES ONLY

Apply SAE 10W engine oil sparingly. Wipe off excess lubricant.

LUBRICATE AUTOMATIC TRANSMISSION KICKDOWN LINKAGE

Lubricate all pivot points in the kickdown linkage with lubricant meeting Ford Chassis and Ball Joint Lube specifications (Part 50-03).

CHANGE TRANSMATIC DRIVE TRANSMISSION FLUID AND REPLACE FILTER ELEMENT

MT SERIES TRANSMISSION

1. If the fluid is cold, operate the transmission until a normal operating temperature is reached.

2. Loosen, but do not remove, the screw which secures the filter cover to the transmission pan (Fig. 1).
3. Carefully separate the filter cover from the pan at the bottom edge only. When the drainage is complete, remove the cover, retainer, and filter. Discard the filter and fluid.
4. Install a new filter. Install a new retainer seal ring, filter retainer, a new cover seal ring, cover and strap. Tighten the strap attaching screw (Fig. 1).
5. Slowly pour 9 quarts of the specified automatic transmission fluid into the transmission. Apply the parking brake securely, then start the engine.
6. With the hand throttle, set engine speed at 800-1000 rpm with the selector lever at N.
7. Check the transmission fluid level when the engine reaches normal operating temperature. If necessary, add fluid to bring the level to the ADD FLUID mark.
8. Continue to run the engine at 1000 rpm with the selector lever at 3-6 until the transmission fluid reaches normal operating temperature.
9. Apply the service brakes, and shift the transmission through all ranges.
10. With the engine running and the selector lever at N, check the fluid level. Add fluid if necessary, to bring the level to the FULL mark. Approximately 13 quarts are required if the fluid pan and control valve body have been removed. Total dry capacity for the transmission and cooling system is approximately 19 quarts.

AT-540 TRANSMISSION

1. If the fluid is cold, operate the transmission until a normal operating temperature is reached.
2. Disconnect the filler tube from the transmission pan and allow the fluid to drain.
3. When the fluid has stopped draining, reconnect the filler tube and tighten the fitting securely.
4. Remove the dipstick and pour approximately ten quarts of transmission fluid into the transmission through the filler tube.
5. With the vehicle standing level, apply the parking brake and place the selector lever in N. Operate the engine at idle speed.
6. If the transmission fluid is cold, operate the transmission until normal operating temperatures (150 degrees to 200 degrees F) is reached.
7. When the engine and transmission have reached their normal operating temperatures, shift the selector lever through all the range positions to make sure that warm fluid is distributed throughout the transmission. Return the selector lever to N.
8. Check the fluid level on the dipstick. The safe operating level is between the ADD and FULL marks on the dipstick. If fluid level is low, add sufficient fluid to bring level to the FULL mark. If level is too high, drain excess fluid to proper level.

CHECK FLUID LEVEL—AUTOMATIC TRANSMISSION (EXCEPT TRANSMATIC)

The automatic transmission is designed to operate with the oil level between the add and full mark on the dipstick at an operating temperature of 150 degrees F to 170 degrees F, and should be checked under these conditions. The operating temperature may be obtained by driving 15 to 20 miles of city type driving with the outside temperature above 50 degrees F. If the transmission is not at an operating temperature of 150 degrees F to 170 degrees F and it becomes necessary to check the fluid level, the transmission may be checked at 70 degrees F to 95 degrees F. Check the fluid level as follows:

TRANSMISSION AT OPERATING TEMPERATURE (150 DEGREES F TO 170 DEGREES F)

1. With transmission in Park P position, engine at curb idle RPM, foot brakes applied and vehicle on level surface, move the transmission selector level through each range, allowing time in each range to engage transmission, return to Park P position, and apply parking brake. **Do not turn off the engine during the fluid level check.**
2. Clean all dirt from the transmission fluid dipstick cap before removing the dipstick from the filler tube.
3. Pull the dipstick out of the tube, wipe it clean, and push it all the way back into the tube. Be sure it is fully seated.
4. Pull the dipstick out of the tube again and check the fluid level. The fluid level should be between the ADD and FULL mark. If additional fluid is required, add enough fluid through the filler tube to bring the level between the ADD and FULL marks on the dipstick. **Do not overfill the transmission,** as this will result in foaming and loss of fluid through the vent and possible transmission malfunction.

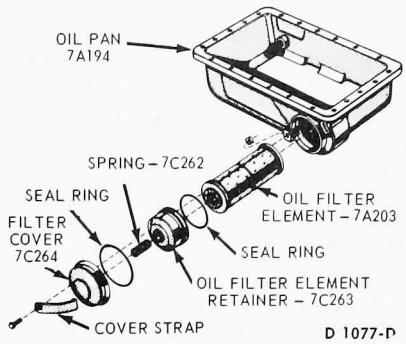

FIG. 1 Transmatic Transmission Fluid Filter Assembly

5. Install the dipstick, making sure it is fully seated in the tube.

TRANSMISSION AT ROOM TEMPERATURE (70 DEGREES F TO 95 DEGREES F)

1. With transmission in Park P position, engine at curb idle RPM, foot brakes applied and vehicle on level surface, move the transmission selector lever through each range, allowing time in each range to engage transmission, return to Park P position and apply parking brake. **Do not turn off the engine during the fluid level check.**
2. Clean all dirt from the transmission fluid dipstick cap before removing the dipstick from the filler tube.
3. Pull the dipstick out of the tube, wipe it clean, and push it all the way back into the tube. Be sure it is fully seated.
4. Pull the dipstick out of the filler tube again and check the fluid level. **For C4 and FMX transmissions,** the fluid level should be between the middle and top holes on the dipstick. If the fluid level is below the middle hole, add enough fluid through the filler tube to bring the level between the **middle hole** and the ADD mark. **For C6 transmissions,** the fluid level should be between the middle and top holes on the dipstick. If the fluid level is below the middle hole, add enough fluid through the filler tube to bring the level between the **middle and top** holes.
5. Install the dipstick, making sure it is fully seated in the tube.

If the transmission fluid level is correctly established at 70 degrees F to 95 degrees F, it will appear between the ADD and FULL marks on the dipstick when the transmission reaches an operating temperature of 150 degrees F to 170 degrees F. This fluid is set between the middle hole and the ADD mark for C4 and FMX transmissions

and between the middle and top holes for the C6 transmission to allow for expansion of the fluid as transmission temperatures rise to normal operating temperatures of 150 degrees F to 170 degrees F.**Do not overfill;**however, if fluid is too low, extreme cold temperatures will contract the fluid, which may result in transmission malfunction.

CHECK TRANSMATIC TRANSMISSION FLUID LEVEL

MT-SERIES TRANSMISSION

1. With the vehicle standing level, apply the parking brake, and place the range selector lever in N. Start the engine.
2. If the transmission fluid is cold, operate the transmission until normal operating temperatures are reached. **Do not operate the hydraulic retarder to warm the transmission fluid. Operating the hydraulic retarder when the vehicle is not moving will aerate the fluid, making an accurate fluid level check impossible.**
3. When the engine and transmission have reached their normal operating temperatures, move the selector lever through all the range positions to make sure that warm fluid is distributed throughout the transmission.
4. With the hand throttle, adjust the engine speed to 800-1000 rpm with the selector lever at N.
5. Clean around the transmission dipstick cap before removing the dipstick.
6. Twist the dipstick counterclockwise to unlock the cap from the tube. Pull the dipstick out of the tube, wipe it clean, and insert it back into the tube. On a C-Series truck, the dipstick can be removed through the opening in the panel behind the seat back cushion with the cab in its normal position.
7. Remove the dipstick again and check the fluid level. If necessary, add Specified Automatic Transmission Fluid to raise the fluid level to the FULL mark on the dipstick. If the fluid level is more than 5/16 inch above the FULL MARK, drain fluid until the FULL level is obtained.
8. Replace the dipstick in the tube. Turn the cap clockwise to lock it. **Failure to lock the cap may cause** the transmission selector lever in neutral and park.

AT-540 TRANSMISSION

1. With the vehicle standing level, apply the parking brake, and place the range selector lever in N. Operate the engine at idle speed.
2. If the transmission fluid is cold, operate the transmission until normal operating temperature (150 degrees to 200 degrees F) is reached.
3. When the engine and transmission have reached their normal operating temperatures, move the selector lever through all the range positions to make sure that warm fluid is distributed throughout the transmission. Return the selector lever to N.
4. Clean around the end of the fill pipe before removing the dipstick.
5. Check fluid level on dipstick. The safe operating level is between the ADD and FULL marks on the dipstick. If fluid level is low, add sufficient fluid to bring level to the FULL mark. If level is too high, drain excess fluid to proper level.

MAINTENANCE

TRANSMISSION SHIFT LEVER OPERATION

Check and adjust automatic transmission, if necessary, to match transmission range and lever position.

CHECK TRANSMISSION MOUNTINGS

Check the transmission attaching bolts to be sure they are tightened to specifications. Tighten the attaching bolts to specifications, if necessary.

NEUTRAL START SWITCH ADJUSTMENT

F-100-250-350 AND P-350-400-500

1. Loosen the two neutral start switch attaching screws (Fig. 2).
2. Hold the selector lever against the neutral stop.
3. Move the sliding block on the neutral switch to the neutral position. Working from the rear side of the switch, insert an 0.091 inch diameter gauge pin (No. 43 drill) in the gauge pin hole (Fig. 2).

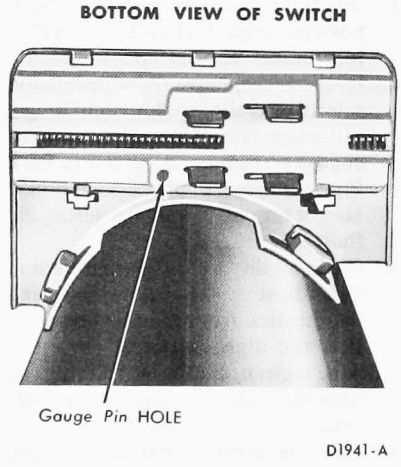

FIG. 2 Typical Neutral Start Switch—F-100-250-350

4. Slide the switch as required to permit the switch actuating lever to contact the switch sliding block.
5. Tighten the two switch attaching screws and remove the auge pin.
6. Check the operation of the switch. The engine should start only with the transmission selector lever in neutral and park.

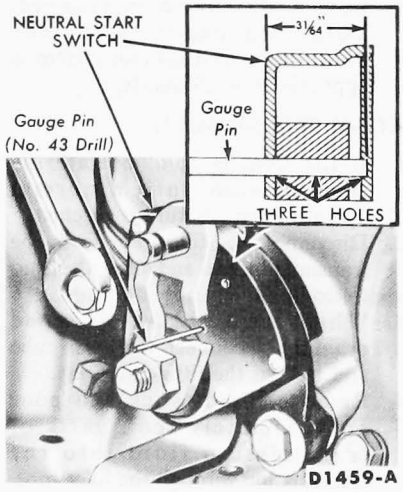

FIG. 3 Neutral Start Switch—Econoline and Bronco

ECONOLINE AND BRONCO

1. With the manual linkage properly adjusted, loosen the two switch attaching bolts (Fig. 3).

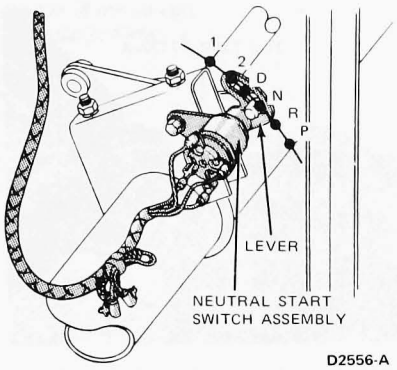

FIG. 4 Neutral Start Switch—P-350-400-500

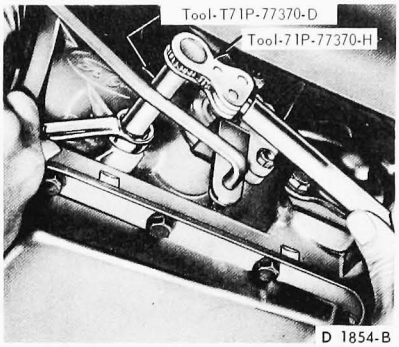

FIG. 5 Intermediate Band Adjustment—C4 Transmission

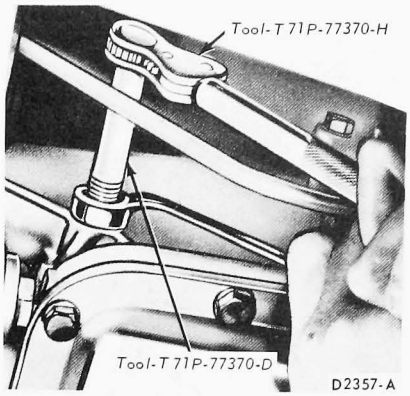

FIG. 6 Low-Reverse Band Adjustment—C4 Transmission

2. Place the transmission manual lever in neutral. Rotate the switch and insert the gauge pin (No. 43 drill shank end) into the gauge pin holes of the switch. The gauge pin has to be inserted a full 31/64 inch into the three holes of the switch (Fig. 3).
3. Torque the two neutral start switch attaching bolts to specification. Remove the gauge pin from the switch.
4. Check the operation of the switch. The engine should start only with the transmission selector lever in neutral or park.

P-350-400-500

1. Place the selector lever in neutral.
2. Loosen the two neutral start switch attaching screws.
3. Move the neutral start switch until the switch lever is in the neutral detent position (Fig. 4). Tighten the attaching screws.
4. Check the operation of the switch in each selector lever position. The engine should start only with the transmission selector level in neutral or park.

CHECK AND ADJUST C-4 AUTOMATIC TRANSMISSION BANDS

INTERMEDIATE BAND

1. Clean all dirt from the band adjusting screw and apply penetrating oil to the adjusting screw threads. Remove and discard the lock nut.
2. Install a new lock nut on the adjusting screw. With the tool shown in Fig. 5, tighten the adjusting screw until the tool handle clicks. The tool is a pre-set torque wrench which clicks and breaks when the torque on the adjusting screw reaches 10 ft-lbs.
3. **Back off the adjusting screw exactly 1 3/4 turns.**
4. Hold the adjusting screw from turning and torque the lock nut to specification.

LOW-REVERSE BAND

1. Clean all the dirt from the band adjusting screw area and apply penetrating oil to the adjusting screw threads. Remove and discard the lock nut.
2. Install a new lock nut on the adjusting screw. With the tools shown in Fig. 6, tighten the adjusting screw until the tool handle clicks. The tool is a pre-set torque wrench which clicks and breaks when the torque on the adjusting screw reaches 10 ft-lbs.
3. **Back off the adjusting screw exactly 3 full turns.**
4. Hold the adjusting screw from turning and torque the lock nut to specification.

C6 TRANSMISSION INTERMEDIATE BAND ADJUSTMENT

1. Clean all the dirt from the band adjusting screw area. Remove and discard the lock nut.
2. Install a new lock nut and tighten the adjusting screw to 10 ft-lbs torque (Fig. 7).
3. **Back off the adjusting screw exactly 1 1/2 turns.**
4. Hold the adjusting screw from turning and tighten the lock nut to specification.

CHECK AND ADJUST FMX TRANSMISSION BANDS

FRONT BAND ADJUSTMENT

1. Drain the fluid from the transmission by loosening the pan attaching bolts starting at the rear of the pan and working toward the front. When most of the fluid has drained from the pan, remove the remainder of the attaching bolts. Use a clean drain can equipped with a 100-mesh screen if the fluid is to be reused.
2. Remove the pan, then remove the fluid filter and clip from the transmission. Clean the inside of the pan. Remove all gasket material from the pan mounting face of the case.
3. Loosen the front servo adjusting screw lock nut.
4. Pull back on the actuating rod, and insert the 1/4 inch spacer between the adjusting screw and servo piston stem (Fig. 8). Tighten the adjusting screw to 10 in-lbs torque. Remove the spacer and tighten the adjusting screw an additional 3/4 turn. Hold the adjusting screw stationary and tighten the lock nut securely.
5. Install the transmission fluid screen and clip. Install the pan using a new gasket.
6. Refill the transmission to the proper level with the specified fluid.

REAR BAND ADJUSTMENT

1. Remove all dirt from the adjusting screw threads, then oil the threads.
2. Loosen the rear band adjusting screw lock nut. Using the torque wrench shown in Fig. 9, tighten the adjusting screw until the tool handle clicks. The tool is a pre-set torque wrench which clicks and breaks when the torque on the adjusting screw reaches 10 ft-lbs.
3. If the screw is found to be tighter than wrench capacity (10 ft-lbs torque), loosen the screw and tighten until the wrench clicks and breaks.
4. Back off the adjusting screw 1 1/2 turns. Hold the adjusting screw

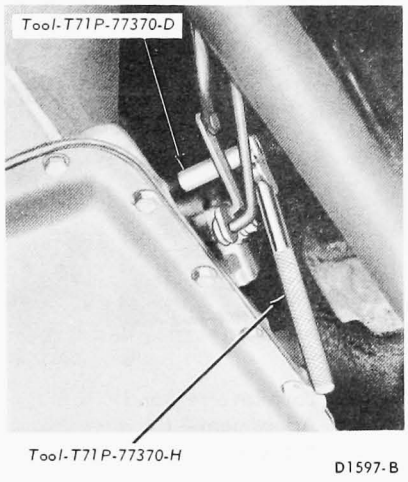

FIG. 7 Intermediate Band Adjustment—C6 Transmission

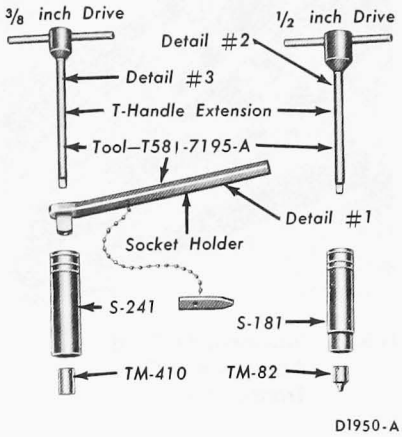

FIG. 8 Front and Rear Band Adjusting Tool—FMX Transmission

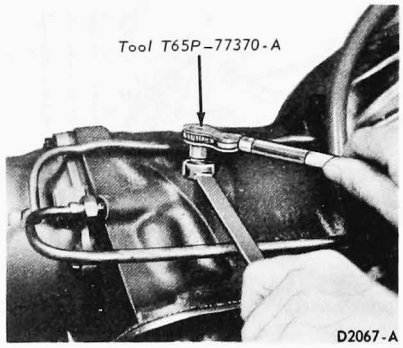

FIG. 9 Adjusting Rear Band—FMX Transmission

stationary and torque the adjusting screw lock nut to specifications. **Severe damage may result if the adjusting screw is not backed off exactly 1 1/2 turns.**

SPECIFICATIONS

Refer to the 1973 Truck Specifications Book or Truck Shop Manual for any specifications or Special Tools not contained in this Section.

TORQUE LIMITS (IN-LBS)
FMX TRANSMISSION

Item	In-Lbs.
Rear Pump Cover Screws (10-24)	25-35
(1/4-20)	80-90
Governor to Counterweight	50-60
Governor Valve Body Cover Screws	20-30
Pressure Regulator Cover Screws	20-30

Item	In-Lbs
Control Valve Body Screws (10-24)	20-30
Front Servo Release Piston	20-30
End Plates to Body	20-30
Stator Support to Pump	23-35
Governor Inspection Cover to Extension	50-60
T.V. Body to Valve Body	20-30

TORQUE LIMITS (FT-LBS) FMX TRANSMISSION

Item	Ft-Lbs
Converter to Flywheel	23-38
Converter Hsg. to Trans. Case	40-50
Front Pump to Trans. Case	17-22
Front Servo to Trans. Case	30-35
Rear Servo to Trans. Case	40-45
Upper Valve Body to Lower Valve Body	4-6
Oil Pan to Case	10-13
Converter Cover to Converter Hsg.	12-16
Regulator to Case	17-22
Planetary Support Locating Screw	20-30
Control Valve Body to Trans. Case	8-10
Rear Bearing Retainer to Extension	28-38
Output Shaft Yoke Nut	150-200

Item	Ft-Lbs
Converter Drain Plug	15-28
Extension Assy. to Trans. Case	30-40
Pressure Gauge Tap	7-15
Rear Band Adjusting Screw Locknut	35-40
Front Band Adjusting Screw Locknut	20-25
Manual Valve Inner Lever to Shaft	30-40
Downshift Lever to Shaft	17-20
Filler Tube to Engine	20-25
Filler Tube to Pan	45-55
Transmission to Engine	40-50
Diaphragm Assy. to Case	20-30
Oil Cooler Mounting Bracket	16-21

TORQUE LIMITS C4 TRANSMISSION

Item	Ft-Lbs	Item	Ft-Lbs	Item	Ft-Lbs
Converter to Flywheel	23-28	Pressure Gauge Tap	9-15	Lower to Upper Valve Body	40-55
Converter Hsg. to Trans. Case	28-40	Band Adj. Screw Locknut to Case	35-45	Reinforcement Plate to Body	40-55
Front Pump to Trans. Case	28-40	Yoke to Output Shaft	60-120	Screen and Lower to Upper Valve Body	40-55
Overrunning Clutch Race to Case	13-20	Reverse Servo Piston to Rod	12-20	Neutral Switch to Case	55-75
Oil Pan to Case	12-16	Converter Drain Plug	20-30	Neutral Switch to Column	20
Rear Servo Cover to Case	12-20	Manual Valve Inner Lever to Shaft	30-40	Separator Plate to Lower Valve Body	40-55
Stator Support to Pump	12-20	Downshift Lever to Shaft	12-16	Control Assy. to Case	80-120
Converter Cover to Converter Hsg.	12-16	Filler Tube to Engine	20-25	Gov. Body to Collector Body	80-120
Intermediate Servo Cover to Case	16-22	Filler Tube to Pan	32-42	Cooler Line Fittings	80-120
Diaphragn Assy. to Case	15-23	Transmission to Engine	40-50	Detent Spring to Lower Valve Body	80-120
Extension Assy. to Trans. Case	28-40	Distributor Sleeve to Case	12-20	Upper Valve Body to Lower Valve Body	80-120
Engine to Transmission	23-33	T.R.S. Switch to Case	4-8	Oil Tube Connector	80-120
		Transfer Case to Transmission	21-30	End Plates to Body	20-35

TORQUE LIMITS C6 TRANSMISSION

Item	Ft-Lbs
Converter to Flywheel	20-35
Front Pump to Trans. Case	12-20
Overruning Clutch Race to Case	18-25
Oil Pan to Case	12-16
Stator Support to Pump	12-16
Converter Cover to Converter Hsg.	12-16
Guide Plate to Case	12-16
Intermediate Servo Cover to Case	10-14
Diaphragm Assy. to Case	15-23
Distributor Sleeve to Case	12-16
Item	**In-Lbs**
End Plates to Body	20-30
Inner Downshift Lever Stop	20-30
Reinforcement Plate to Body	20-30
Screen and Lower to Upper Valve Body	50-60

Item	Ft-Lbs
Extension Assy to Trans. Case	25-30
Pressure Gauge Tap	9-15
Band Adj. Screw Locknut to Case	35-45
Cooler Tube Connector Lock	20-35
Converter to Drain Plug	14-28
Manual Valve Inner Lever to Shaft	30-40
Downshift Lever to Shaft	12-16
Filler Tube to Engine	20-25
Transmission to Engine	40-50
T.R.S. Switch to Case	4-8
Item	**In-Lbs**
Control Assy to Case	95-125
Gov. Body to Collector Body	80-120
Oil Tube Connector	60-120
Detent Spring to Case	80-120

TORQUE LIMITS
AT-540 TRANSMISSION

Description	Ft-Lbs	Description	Ft-Lbs
Oil Pump Body-to-Support Bolts	15-20	Trimmer Cover-to-Control Valve Body Bolts	8-12
Output Flange Bolt	83-100	Detent Spring-to-Valve Body Bolt	8-12
Front Support-to-Case Bolts	15-20	Control Valve Body-to-Case Bolts	8-12
Power Take-Off Cover Bolts	15-20	Oil Filter Bolt	10-15
Pressure Tap Plugs	10-15	Oil Pan Screws	10-13
Governor Cover Bolts	15-20	Center Support Anchor Bolt	39-46
Vacuum Modulator Retainer Bolt	15-20	Selector Shaft Nut	15-20
Modulator Valve Body-to-Control Valve Body Bolts	8-12	Converter-to-Flywheel Bolts	34-40

TORQUE LIMITS MT-SERIES
AUTOMATIC TRANSMISSION

Description	Ft-Lbs	Description	Ft-Lbs
Screwdriver Slotted Screws	24-36 ①	Parking Brake Bracket Bolt	42-50
Allen Head Set Screw	8-12 ①	Output Flange Bolt	83-100
Front Pitot Screw	30-48 ①	Main Valve Body to Housing Bolt	4-6
Brake Adjusting Nut (1/4-20)	6-8	Oil Transfer Plate to Housing Bolt	8-10
Filter Can Cover Strap Bolt	11-14	Downshift Timing Valve Body to Housing Bolt	8-10
Manual Selector Shaft Nut	14-17	Converter Ground Sleeve Bolt	17-20
Brake Adjusting Nut (7/16-14)	42-50	Converter Pump Hub Bolt	9-11
TV Shaft Nut	14-17	Rear Pitot Bolt	8-10
Converter Pump Nut	19-23	Anchor - Splitter Low Reaction Plate Bolt	20-23 ②
Oil Sump Pan Bolt	15-18	Anchor - High Clutch Diaphragm Bolt	20-23 ②
Front Oil Pump Bolt	15-18	Anchor - Intermediate Piston Housing Bolt	20-23 ②
Brake Control Valve Body Bolt 5/16-18 x 1-1/4	15-18	Anchor - Low and Reverse Piston Housing Bolt	20-23 ②
5/16-18 x 2-1/4	14-17	Anchor - Intermediate Reaction Plate-Nut	65-75
PTO Cover Bolt	15-20	-Bolt	35-40
Rear Bearing Retainer Bolt	42-50	Anchor - Low Reaction Plate-Nut	65-75
Converter Housing Bolt	42-50	-Bolt	35-40
Rear Pitot Adapter (or Pump) Bolt	15-18	Anchor - Reverse Reaction Plate-Nut	65-75
Brake Assembly Bolt (1/2-13)	67-80	-Bolt	35-40
(5/8-11)	164-192		

① Inch-Pounds

② These bolts are to be torqued to approximately 10 lb ft when assembled with mating parts into housing. After final torquing of rear bearing retainer bolts and converter housing bolts, loosen bolts and retighten to the **SPECIFIED** torque. **CAUTION:** The bolt on top of transmission is to be tightened after the two bolts are tightened in bottom of high clutch diaphragm.

CY1449-B

PART 50-21 Gasoline Engines

COMPONENT INDEX	Page
PRE-DELIVERY	
Engine Oil – Check	21-01
Belts – Drive	21-01
Intake Manifold Bolts – Torque – 8 Cylinder Only	21-01
Engine Governor Speed – Check and Adjust	21-01
Engine Performance	21-01
LUBRICATION	
Engine Oil and Filter	21-02
MAINTENANCE	
Crankcase Fill Cap Breather Replacement	21-03
Filter – Crankcase Ventilation	21-03
Engine Oil Cooler Cleaning	21-03
Crankcase Emission System Cleaning and Valve Replacement	21-04
Belt Tension Adjustment – Drive	21-04
Valve Lash – Check and Adjust	21-05
Engine Mountings – Check	21-05
Intake Manifold Bolts – Torque	21-01
Governor Adjustment	
Vacuum	21-05
Velocity	21-05
Mechanical	21-06

PRE-DELIVERY

CHECK ENGINE OIL LEVEL

Check the dipstick for the correct quantity of oil. Use only the specified oil. See Part 50-03.

The engine oil level should be above the ADD oil mark and not above the FULL mark.

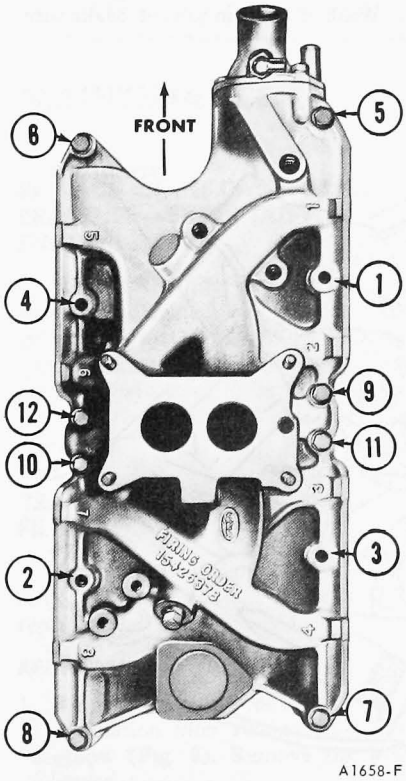

FIG. 1 Intake Manifold Torque Sequence—302 Engine

DRIVE BELTS

Check noise level and belt tension and correct as necessary. Refer to Specifications Section for gasoline engine belt tension specifications. Refer to the applicable manufacturer's service manual for diesel engine belt tension specifications.

TORQUE INTAKE MANIFOLD BOLTS—8-CYLINDER ONLY

Refer to the appropriate illustration for the correct tightening sequence (Figs. 1, 2 and 3). Using a torque wrench, and following the sequence given, tighten the manifold to specifications (Specifications Section).

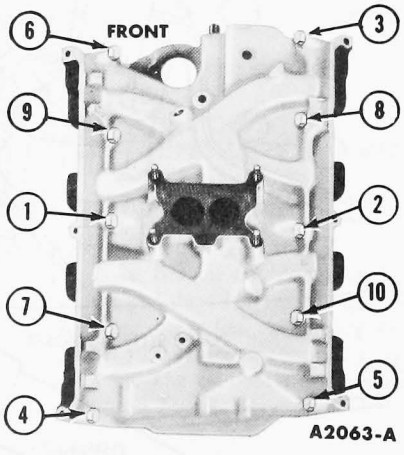

FIG. 2 Intake Manifold Torque Sequence—330, 360, 361, 390 and 391 Engines

Torque bolts evenly, criss-crossing the manifold at the fuel and coolant passage connections.

CHECK AND ADJUST ENGINE GOVERNOR SPEED

Refer to the Maintenance Section of this Part for the governor speed adjustment procedures.

ENGINE PERFORMANCE

Check for smoothness of operation and performance consistent with weight, engine size, and transmission-axle ratio combination.

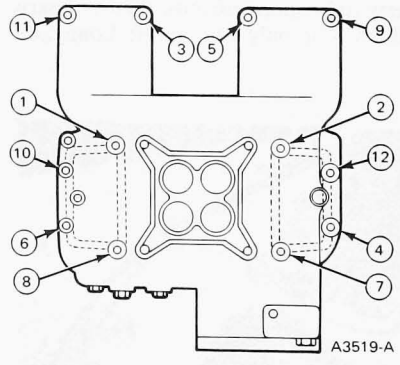

FIG. 3 Intake Manifold Torque Sequence—401, 477 and 534 Super Duty Engines

LUBRICATION

ENGINE OIL AND FILTER—GASOLINE ENGINES

By law, all 1973 U.S. vehicles are equipped with air pollution control systems. To maintain effective operation of these systems to properly protect the engine, use of a high grade motor oil with some new characteristics is essential. Ford 6000 Mile Motor Oil is formulated to meet these requirements. If another brand of oil is used, it must meet Ford Motor Company performance specification, 101-C.

These required oils contain a special additive which neutralizes the corrosive acids (generated in all engines by burning gasoline) which are not completely removed by the required anti-smog emission system controls. In addition, the specified oils have been formulated to keep the crankcase ventilation valve clean and fully operative, so that the emission control (anti-smog) system will operate as designed.

OIL VISCOSITY

From the tables in the Specifications Section, select the viscosity that most nearly matches the expected temperature range of vehicle operation.

USE THE RIGHT OIL FILTER

Proper oil filtration is just as essential as use of good motor oil. The two-stage filtering action of a Motorcraft oil filter has been shown by tests to be more effective than ordinary filters. Use only Motorcraft Long Life oil filter or one of equal quality which meets the Ford Motor Company specifications (Part 50-03).

CHANGE ENGINE OIL

1. Remove the oil pan drain plug, drain oil into a container, then replace the plug.
2. **Install a new filter or element each time the oil is changed.**
3. Fill the crankcase with the specified engine oil. Run the engine at fast idle and check for leaks.

ENGINE OIL FILTER REPLACEMENT

Disposable-Type Oil Filter Assembly—All Except Econoline

1. Place a drip pan under the oil filter. Unscrew the filter from the cylinder block with a filter wrench.
2. Coat the gasket on the new filter with oil. Place the filter in position on the cylinder block (Fig. 4). Hand tighten the filter until the gasket contacts the adapter face; then advance it 1/2 turn.
3. Operate the engine at fast idle, and check for oil leaks. If oil leaks are evident, perform the necessary repairs to correct the leakage. Check the oil level and fill the crankcase if necessary.

Disposable-Type Oil Filter Assembly—Econoline

To remove the oil filter on Econoline models with V-8 engines and power steering, the following instructions are recommended:

1. With the wheels to the full right turn (against stops) position, loosen the oil filter with a strap wrench.
2. Unscrew the oil filter from the engine, turn it to a horizontal position, and let the excess oil drain off.
3. Slide the filter rearward and remove (Fig. 5).

Note: Some effort may be required to slide the oil filter between the engine crossmember and the power steering hoses. This is considered normal.

Replaceable Element Type Oil Filter

The oil filter assembly is shown in Figs. 6 and 7.

1. Place a drip pan under the filter. Remove the filter center bolt, then remove the filter assembly and gasket. Discard the gasket.
2. Remove the filter element, neoprene gasket, spring and seat; then remove the center bolt from the container and the fiber gasket from the bolt. Discard the element and gaskets.
3. Wash all parts in solvent. Make sure

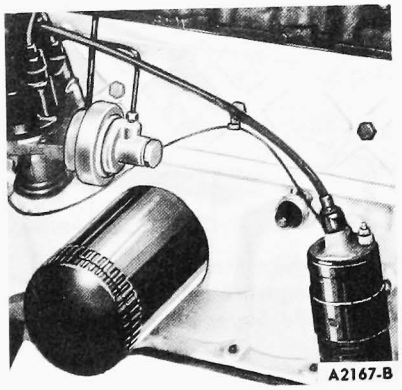

FIG. 4 Oil Filter Installed—Typical

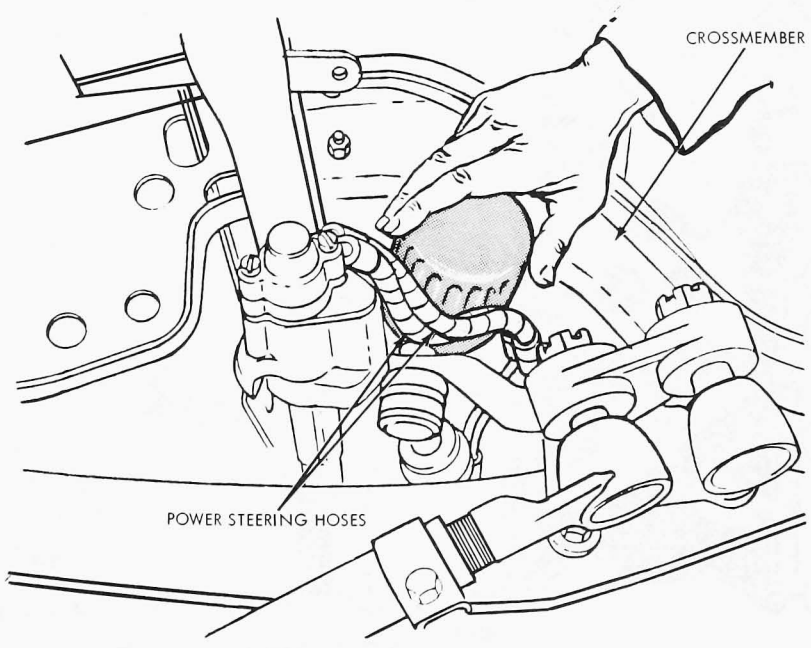

FIG. 5 Econoline Oil Filter Removal—V-8 Engine and Power Steering

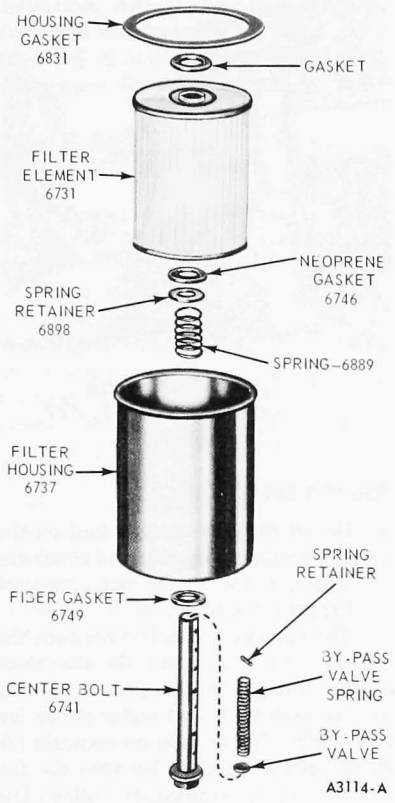

FIG. 6 Typical Replaceable Element—Type Oil Filter Assembly

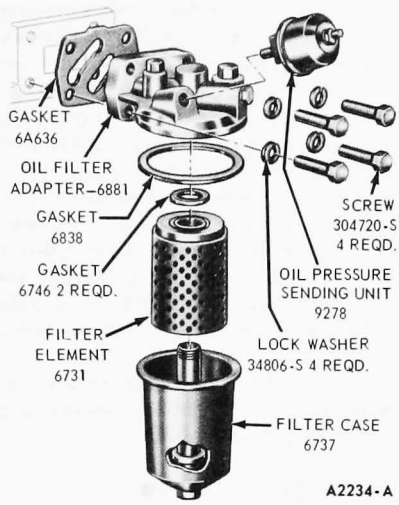

FIG. 7 Cartidge-Type Oil Filter and Adapter Mounting—Heavy Duty

the openings in the bolt are clean.

4. Install the new filter element in the housing, following the instructions furnished with the new element.
5. Clean the cylinder block filter recess. Install a new gasket.
6. Place the filter assembly in position and thread the center bolt into the adapter finger tight.
7. Rotate the filter assembly slightly, in each direction, to make sure the gasket is seated evenly.
8. Torque the bolt to specifications (Specifications Section). **Do not overtorque the bolt.**
9. Add oil to the crankcase, if necessary. Operate the engine at fast idle and check for oil leaks.

MAINTENANCE

REPLACE CRANKCASE FILL CAP BREATHER—SUPER DUTY ENGINES

Replace the filler cap and breather assembly at specified maintenance intervals (Part 50-02). With a closed type crankcase ventilation system, the air hoses will have to be disconnected before removing the filler cap assemblies.

CRANKCASE VENTILATION FILTER

Refer to the Maintenance Schedule for recommended frequency of replacement.

REMOVAL

1. Remove the clip from the crankcase ventilation filter retainer and hose elbow (Fig. 8). Remove the hose elbow.
2. Remove the top of the air cleaner.
3. Remove the filter pack from the air cleaner tray. Remove the filter.

INSTALLATION

1. Replace the filter in the filter retainer. Index the filter pack to the locating slot in the air cleaner.
2. Replace the clip on the filter retainer. Snap the hose elbow into place.
3. Install the air cleaner top.

CLEAN ENGINE OIL COOLER—SUPER DUTY ENGINES

REMOVAL

1. Drain the cooling system.
2. Remove the oil cooler cover and gasket and the oil cooler and gasket.
3. Remove the relief valve plug and gasket; then remove the spring and plunger. The oil cooler assembly is shown in Fig. 9.

CLEANING

Clean the oil cooler as soon as possible after removing it from the engine, or soak it in cleaning solvent until ready to clean. This will prevent hardening and drying of accumulated foreign material.

Immerse the oil cooler in a commercial cleaning solvent and clean the outside of the plates with a stiff bristle brush.

Pressure circulate a standard commercial solvent (at a pressure of

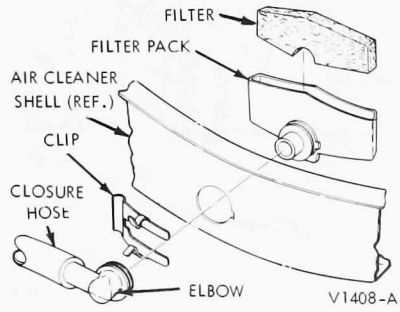

FIG. 8 Crancase Ventilation Filter

approximately 20 psi) through the oil passages of the cooler in the reverse direction of normal flow. Normal flow is from the bottom hole (inlet) to the top hole (outlet). If a circulating pump is not available, soak the cooler in solvent for a few minutes and force the solvent through the oil passages with a plunger or piston-type hand pump. If the oil passages are severely clogged, use an alkaline solution. After cleaning, pressure flush the cooler with clean hot water.

Thoroughly clean the passages in the cover and clean the relief valve assembly. Remove gasket sealer from the cover, oil cooler, and block.

INSTALLATION

1. Install the relief valve plunger (with the open chamber up), spring, gasket and plug in the cover.
2. Place a new cooler gasket, with sealer on both sides, on the block. Position the oil cooler in the block.
3. Place a new cover gasket on the cover with sealer on both sides and install the cover, then tighten the cover bolts to specifications.
4. Open the air bleed valve at the front of the intake manifold and fill and bleed the cooling system.

CLEAN CRANKCASE EMISSION SYSTEM AND REPLACE VALVE

Do not attempt to clean the crankcase ventilation system valve. It must be replaced at the scheduled maintenance interval. The crankcase ventilation system valve is located inside the oil fill cap on vehicles equipped with a closed crankcase system.

The oil filler tube breather cap, located on the valve rocker arm cover should be cleaned at the proper mileage interval. **On a closed crankcase ventilation system, the oil filler tube cap does not filter air; therefore, it does not require cleaning.** Remove the cap and wash it in a low volatility, pretroleum-base solvent. Probe the breather hole(s) to assure removal of any accumulated deposits. Shake the cap dry and install it. **Do not dry with compressed air as air pressure may damage the filter element.**

Clean the crankcase ventilation system connection on the carburetor spacer or intake manifold by probing the inlet nipple with a flexible wire or bottle brush.

Clean the rubber hoses with a low-volatility, pretroleum-base solvent and dry with compressed air.

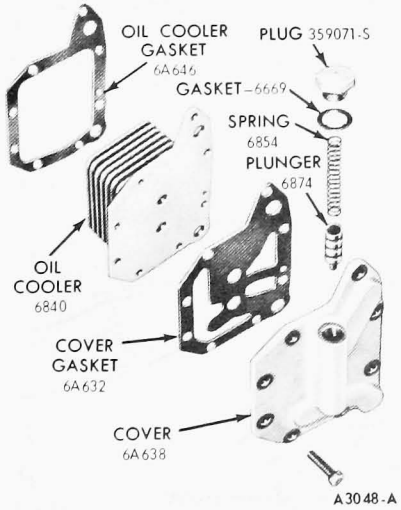

FIG. 9 Oil Cooler Assembly

DRIVE BELT TENSION ADJUSTMENT—GASOLINE ENGINES

Recommended belt tensions are included in the Specifications Section. Check the tension and adjust as necessary. To insure proper tension use Burroughs Belt Tension Checking Tool T63L-8620-A (Fig. 10).

100-350 SERIES TRUCKS

1. Install the belt tension tool on the drive belt(s) (Fig. 10) and check the tension following the instructions of the tool manufacturer.
2. If adjustment is necessary, loosen the alternator mounting bolts and move the alternator adjusting arm bolt. Move the alternator toward or away from the engine until the correct tension is obtained. Remove the gauge. Tighten the alternator adjusting arm bolt and the mounting bolts. Install the tension gauge and check the belt tension.

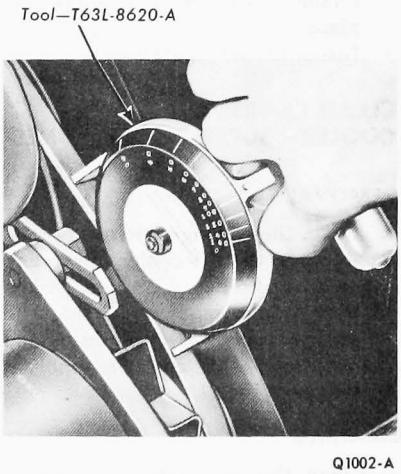

FIG. 10 Checking Drive Belt Tension

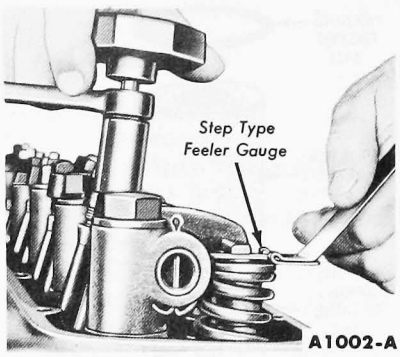

FIG. 11 Typical Valve Lash Adjustment—401, 477, 534 Engines

500-900 SERIES TRUCKS

1. Install the belt tension tool on the drive belt(s) (Fig. 10) and check the tension following the instructions of the tool manufacturer.

The tension is checked between the water pump pulley and the alternator pulley on single or double fan drive belts and all alternator and water pump fan drive belts. The tension on spearate fan drive belts is checked between the fan pulley and the crankshaft pulley. The tension of the air compressor drive belt is checked between the compressor pulley and the fan pulley or the crankshaft (C-Series).

2. If adjustment is necessary, follow the applicable procedure.

SINGLE OR DOUBLE FAN BELTS

Loosen the alternator mounting bolts and the alternator adjusting bracket bolt. Move the alternator generator toward or away from the engine until the correct belt tension is obtained. Tighten the alternator mounting bolts and the adjusting bracket bolt before checking the tension.

SEPARATE FAN BELT

Loosen the fan bracket mounting bolts. Slide the bracket up or down until the correct belt tension is obtained. Tighten the bracket bolts before checking the tension.

On a truck equipped with an air compressor, it may be necessary to loosen the compressor drive belt in order to obtain proper fan drive belt adjustment. Adjust the compressor drive belt after the fan drive belt adjustment is complete.

AIR COMPRESSOR BELT

Loosen the air compressor mounting bolts and slide the compressor in its bracket until the correct tension is obtained. Tighten the compressor mounting bolts before checking the

deflection. **Adjust the air compressor drive belt whenever the fan drive belt is adjusted or replaced. Adjust the air compressor drive belt last.**

CHECK AND ADJUST VALVE LASH (401, 477 AND 534 C.I.D.)

It is very important that the valve lash be held to the correct specifications because:

If the lash is set too close, the valve will open too early and close too late, resulting in rough engine idle. Burning and warping of the valves will occur also because the valves cannot make firm contact with the seats long enough to cool properly. If the lash is excessive, it will cause the valve to open too late and close too early causing valve bounce. In addition, damage to the camshaft lobe is likely because the tappet foot will not follow the pattern of the camshaft lobe causing a shock contact between these two parts.

1. Be sure the engine is at normal operating temperature before attempting to set the valve lash.
2. With the engine idling, set the valve lash (Fig. 11) using a step-type feeler gauge only (go and no go). The final (hot) intake and exhaust valve lash settings are listed in the Specifications Section.

CHECK ENGINE MOUNTINGS

Occasionally, the engine mountings should be visually checked. If the vehicle is operated on rough terrain, this check should be made frequently. If the mounting bolts are loose, torque them to specifications (Specifications Section). If the insulators are worn or frayed, replace them.

VACUUM GOVERNOR ADJUSTMENT

1. Connect a tachometer to the engine.
2. Operate the engine until normal operating temperature has been reached.

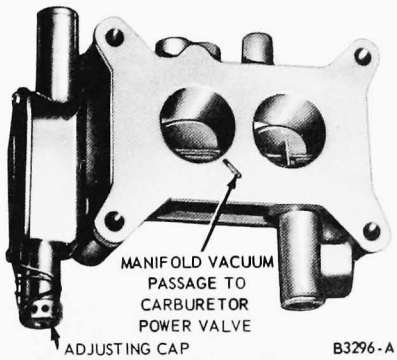

FIG. 12 Typical Velocity Governor

3. Operate the engine at wide open throttle and note the engine speed registered.
4. Stop the engine and remove the adjusting hole plug from the controlling unit housing.
5. With the ignition switch off, crank the engine until the governor adjusting nut is aligned with the adjustment hole.
6. Turn the adjusting nut clockwise to increase speed and counterclockwise to decrease speed. One full turn of the adjusting nut will change top speed about 150 rpm.
7. Repeat the above procedure until the proper top speed is reached.
8. Install the adjusting hole plug and tighten it securely.
9. Attach a new locking wire and lead seal to the adjusting hole plug and the adjacent fin.

VELOCITY GOVERNOR ADJUSTMENT

CONVENTIONAL AND COOLANT HEATED VELOCITY GOVERNORS

Connect a tachometer to the engine. With the engine at normal operating temperature, operate the engine at wide open throttle and compare the rpm with the operating range of the governor. The operating range is stamped on the governor plate.

If governed speed is within range, stop the engine and remove the tachometer.

If adjustment is required or desired, remove the governor seal (Fig. 12). To increase rpm, turn the cap counterclockwise. To decrease rpm, turn the cap clockwise. When adjustment is complete, stop the engine, seal the cap, and remove the tachometer.

COMPENSATING GOVERNOR

If the truck is going to be operated at a consistent altitude, adjust the governor by following the Constant Altitude Adjustment Procedure.

If the truck is going to be operated at varying altitudes above 2000 feet, adjust the governor by following the Constant Altitude Adjustment Procedure.

If the truck is going to be operated at varying altitudes adjust the governor by following the Varying Altitude Adjustment Procedure.

CONSTANT ALTITUDE ADJUSTMENT

1. Cut the governor seal wire and remove the adjusting cap (Fig. 12). **Do not rotate the adjusting cap during removal.**
2. Use a mirror and a light to observe the position of the slots in the adjusting bushing (Fig. 13).
3. Hold tool T64T-12450-A in the proper position to engage the adjusting bushing slots (Fig. 13), and carefully insert the hex-shaped center post of the tool in the hex-head of the adjusting screw. Push the tool inward until the tangs on the tool engage the slots in the adjusting bushing. **If the tool will not engage in the adjusting bushing slots, note the position of the tool and rotate the tool slightly in either direction until engagement is achieved. If it is necessary to rotate the tool more than 1/6 turn (1 flat of the hex head) to accomplish engagement, rotate the tool back to its insertion position and pull the tool out. Rotate the tool 1/6 turn in the direction required to achieve engagement and re-insert it.**
4. The altitude adjustment table specified the amount from the factory setting that Tool T64T-12450-A should be rotated to adjust the velocity governor for altitude operation. For an increase in the average altitude of operation, rotate the tool the specified amount in the counterclockwise direction.
5. Remove the tool and install the adjusting cap. **Do not turn the adjusting cap.**
6. Install a tachometer and check and adjust the no-load setting of the governor. The no-load setting should be 3900 rpm at the trucks operating altitude. If the altitude adjustment was done properly, the load setting at the trucks operating altitude should be 3600 rpm.

If the governor is being adjusted at an altitude above the truck anticipated operating altitude, the load and no-load speeds should be slightly above 3600 and 3900 rpm respectively. If the governor is being adjusted at an altitude below the truck anticipated operating altitude, the load and no-load should be slightly below 3600 and 3900 rpm respectively.

If the load rpm is below the specified rpm (3500 at sea level and 3600 at operating altitudes above 2000 feet), insert the tool by following step 3 and turn it counterclockwise. Remove the tool, insert the adjusting cap and adjust the no-load setting. Check the load setting and adjust again if necessary.

If the load rpm is above the specified rpm (3500 at sea level and 3600 at operating altitudes above 2000 feet), insert the tool by following step 3 and turn it clockwise. Remove the tool, insert the adjusting cap and adjust the

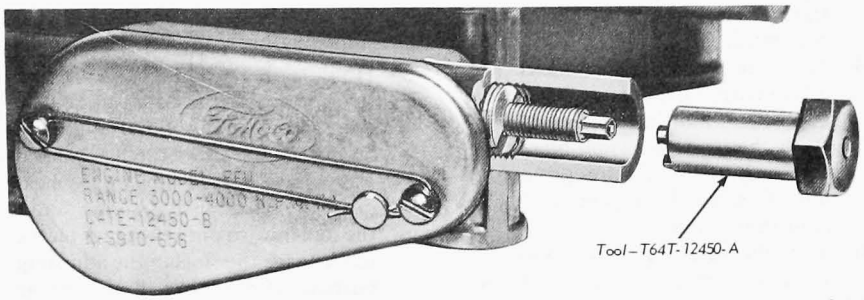

FIG. 13 Altitude Compensation Adjustment

no-load setting. Check the load setting and adjust again if necessary.

7. Remove the tool and install the adjusting cap.
8. Seal the adjusting cap to the governor body (Fig. 12) using the service governor seal wire and lead seal.

VARYING ALTITUDE ADJUSTMENT

This adjustment is made on trucks that are operating between altitudes at or near sea level and altitudes above 2000 feet.

1. Adjust the governor to 3800 rpm (no-load) for sea level operation (this is only necessary if the governor has been adjusted after the truck has left the factory).
2. Using the adjusting cap only, adjust the no-load speed for 4100 rpm at the anticipated altitude (Fig. 14) by turning the adjustment cap 1/4 turn in the clockwise direction for each 1000 foot difference between the adjusting and maximum anticipated operating altitudes.

If the maximum operating altitude of the truck is lower than the altitude at which the adjustment is being made, adjust the no-load speed to 4100 rpm with the adjustment cap.

Average Operating Altitude—Feet	Amount of Tool Rotation
2000	1/3 turn (120°)
3000	1/2 turn (180°)
4000	2/3 turn (240°)
5000	5/6 turn (300°)
6000	1 turn (360°)

+60 or 1/6 turn rotation is equivalent to one flat of the tool hex head.

CY1174-A

FIG. 14 Altitude Adjustment Table

MECHANICAL GOVERNOR ADJUSTMENT

Refer to Fig. 15 for governor speeds (no-load rpm) for gasoline engines.

1. Disconnect the throttle control rod at the carburetor.
2. Loosen the top nut on the primary spring adjusting eye bolt.
3. Tighten the bottom nut finger tight, then turn it in two additional turns to pre-load the spring. Tighten the top nut.
4. Move the throttle to the wide open position and connect the governor throttle control rod to the carburetor control arm.
5. Adjust the governor throttle control rod so that the governor throttle control auxiliary lever is full forward. This is the wide open throttle position. Next, shorten the rod one full turn. This will position the throttle plates slightly off wide open position and will avoid compression of the control rod linkage.
6. Check the accelerator linkage to be sure that wide open throttle position is achieved when the accelerator pedal is depressed to the floor. Be sure that the accelerator rod or cable is attached to the proper hole in the throttle lever.
7. Check the operation of the choke plate from the full open to the full closed position for proper adjustment and freedom of operation. **On a C-Series truck, the choke plate will not close completely when the choke knob is pulled all the way out.**

If there is any bind in the choke cable on a C-Series truck, examine the cable for sharp or reverse bends. Be sure the end of the cable is bent downward to prevent interference with the bottom of the air cleaner, as interference will restrict the opening of the choke plate.

8. To adjust the speed, operate the engine (with the parking brake applied) until normal operating temperature has been reached. Depress the throttle to the full wide open position and adjust the speed by increasing the tension of the governor main spring to increase the rpm, and by decreasing the tension to decrease the rpm.

Sensitivity of the governor can be sharpened by installing the governor spring in the hole closest to the governor lever arm pivot. Adjust the governed speed after changing the spring position.

NO LOAD RPM

Gasoline Engines

ENGINE	TRANSMISSION MANUAL	TRANSMISSION AUTOMATIC
240	4000	4000
300	4000	4000
330 MD	3900	3900
330 HD	3800	3900
361	3800	3800
391	3800	3800
401	2500-3600	3600-3800
477	2500-3400	3400-3600
534	2500-3200	3200-3400

CY1175-A

FIG. 15 Governed Engine Speeds

OIL VISCOSITY VS. TEMPERATURE RECOMMENDATIONS—GASOLINE ENGINES

BRONCO, ECONOLINE, CLUB WAGONS, F-100 THRU -350 M- AND P-SERIES

When you change or add oil, you should select oil with the proper specifications and with the viscosity, selected from the table shown in the Specifications Section which most closely matches the temperature range you expect to encounter for the next 6 months or 6,000 miles.

F-500 THRU -750 AND B-, C-, L-, AND W-SERIES

When you change or add oil, you should select oil with the proper specifications and with the viscosity, selected from the table shown in the Specifications Section, which most closely matches the temperature range you expect to encounter for the next 4 months or 4,000 miles.

SPECIFICATIONS

MULTI-VISCOSITY OILS

When Outside Temperature is Consistently	Use SAE Viscosity Number
Below +32°F	[†] 5W-30
−10°F to +90°F	10W-30
−10°F to +90°F (or above)	10W-40
Above +10°F	20W-40

SINGLE VISCOSITY OILS

When Outside Temperature is Consistently	Use SAE Viscosity Number
−10°F to +32°F	10W
+10°F to +60°F	20W-20
+23°F to +90°F	30
Above 60°F	40

[†] Where sustained driving and/or high speed operation above 60 MPH is anticipated, use the next heavier viscosity oil.

CY1465-A

When Outside Temperature is Consistently	Use SAE Viscosity Number
Below −10°F	[†] 10W
−10°F to +60°F	20W-20
+32°F to +90°F	30
Above +60°F	40

[†] Where sustained driving and/or high speed operation above 50 MPH is anticipated, use 20W-20.

For best performance, use Service Classification "SE" straight viscosity oils.

CY1466-A

ENGINE CRANKCASE REFILL CAPACITIES

Bronco, Econoline, 100-350, and P-Series

Engine	Approx. Cap. (Qts.) [a] U.S. Measure	Imperial Measure
240 Six	4	3-1/2
240 Six (4 x 4, F-350 and P-Series)	5	4-1/4
300, 302, 360 and 390 C.I.D.	5	4-1/4

800-900 Series

Gasoline Engines

Engine	Truck Model	Crankcase Approx. Cap. (Qts.) [c] U.S.	Imperial
330 HD V-8 361 V-8 391 V-8	L-800 Series	10 [a] [c]	8-1/4 [a] [c]
361 V-8 391 V-8	C, CT-800		
401 V-8 477 V-8 534 V-8	L-900 Series	9 [b]	7-1/2 [b]
401 V-8 477 V-8 534 V-8	C, CT-900		

500-750 Series

Engine	Truck Model	Crankcase Approx. Cap. (Qts.) U.S.	Imperial
240 Six	F-500, B-500, LN-500	5 [a]	4 [a]
300 Six	F-500, B-500, LN-500	5 [a]	4 [a]
300 HD Six	F-600, B-600, LN-600	6 [a]	5 [a]
	C-500, C-600		
330 V-8	F-500, B-500, F-600 B-600, B-700, LN-500, LN-600	8 [a]	6-1/2 [a]
	C-500, C-600		
330 HD V-8	F-600, B-600, F-700 B-700, LN-600, LN-700	8 [a]	6-1/2 [a]
	C-600, C-700		
361 V-8	F-600, B-600, F-700, B-700 F-750, B-750, LN-600, 700, 750	8 [a]	6-1/2 [a]
	C-600, C-700, C-750		
391 V-8	F-250, B-750, LN-750	8 [a]	6-1/2 [a]
	C-750		

[a] Add 1 quart extra when changing oil filter. [b] Add 2 quarts extra when changing oil filter.
[c] Add 12 U.S. quarts (10-1/4 Imperial qts.) when equipped with optional bypass filter.

CY1396-C

INTAKE MANIFOLD BOLT TORQUE

Engine	(Ft-Lbs.)
302	20-22
330-360-361-390-391	32-35
401-477-534	23-28

Torque bolts evenly, criss-crossing the manifold at the fuel and coolant passage connections.

CY 1212-A

Gasoline Engine Drive Belt Tension – Using Belt Tension Gauge Tool T63L – 8620 – A

Application	Initial Belt Min.	Initial Belt Max.	Reset (1) Tension Min.	Reset (1) Tension Max.
Gasoline	–	140	–	110

(1) Reset tensions apply to any belt which requires retensioning because of repair or replacement of associated components and/or has been in operation for more than 10 minutes.

CQ1083-B

Engine Valve Lash

Engine	Valve Lash
401, 477, 534 C.I.D.	0.020 Inch

CY1467-B

PART 50-22 Diesel Engines

COMPONENT INDEX	Page
FORD V-8 DIESEL ENGINES	
LUBRICATION	
Accelerator Linkage Lubrication	22-02
Starting Motor Lubrication	22-02
Engine Oil Level	22-02
Engine Oil and Filters	22-02
MAINTENANCE	
Engine Mounting Bolts Torque Check	22-04
Air Inlet Piping Check	22-04
Engine High and Low Idle Speed Check	22-04
High and Low Idle RPM	22-04
Record Oil Pressure	22-04
Drive Belt Tension – Check and Adjust	22-05
Radiator Coolant Level	22-05
Coolant Condition Check	22-05
Cooling System – Clean	22-05
Cooling System – Draining and Filling	22-05
Crankcase Breather – Change	22-05
Air Cleaner Element – Clean or Replace	22-05
Air Inlet Restriction Check	22-06
Fuel System Priming	22-06
CUMMINS DIESEL ENGINES	
LUBRICATION	
Accelerator Linkage Lubrication	22-06
Starting Motor Lubrication	22-06
Engine Oil Level	22-06
Engine Oil and Filter	22-06
MAINTENANCE	
Fan Hub and Drive Pulley Check	22-09
Air Intake Piping Check	22-09
Drive Belt Tension Adjustment	22-09
Oil Pressure – Record	22-09
Engine Mounting Bolts – Tighten	22-09
Steam Clean Engine	22-10
Cooling System – Draining and Cleaning	22-10

COMPONENT INDEX	Page
Coolant Condition Check	22-10
Corrosion Resistor Element Replacement	22-10
Cooling System – Cleaning	22-11
Air Inlet Restriction Check	22-11
Crankcase Breather Replacement	22-11
Air Box Drain Tubes – Check	22-11
Fuel Pump Adjustments	22-12
Fuel Pump Screen and Magnet Cleaning	22-13
Injector Cleaning	22-13
Injector and Valve Lash Adjustment	22-13
Crosshead Adjustments	22-13
Injector Plunger Adjustment	22-13
Fuel Filter Element Replacement	22-13
Engine Blow-By Check	22-13
Thermostat Check	22-13
Manifold Nuts or Capscrews – Check	22-13
Starter Motor and Alternator – Cleaning	22-13
DETROIT DIESEL ENGINES	
LUBRICATION	
Accelerator Linkage Lubrication	22-14
Starter Motor Lubrication	22-14
Engine Oil Level	22-14
Engine Oil Change	22-14
Oil Filter Element Replacement	22-14
MAINTENANCE	
Cooling System Hoses Check	22-14
Fuel Filter and Strainer Elements Replacement	22-14
Cooling System Cleaning	22-15
Water Conditioner and Filter	22-16
Anti-Freeze Solutions	22-16
Cooling System – Draining and Filling	22-16
Record Oil Pressure	22-16

FORD V-8 DIESEL ENGINES

LUBRICATION

LUBRICATE ACCELERATOR LINKAGE

Lubricate the friction points of the accelerator linkage with the specified lubricant (Part 50-03) at the recommended mileage interval.

LUBRICATE ELECTRIC STARTING MOTOR

Add a few drops of clean SAE 30 weight lubricating oil to cranking motor bearings.

ENGINE OIL LEVEL

FORD V-8 DIESEL

Keep the oil level above the ADD 3 qts. mark.

FORD V-8 DIESEL ENGINES

CHANGE ENGINE OIL AND FILTERS

Normal crankcase oil change period is every 6,000 miles when fuel sulphur content is 0.4 or less. When sulphur content is 0.4 to 1.0, reduce interval one-half. If sulphur content is above 1.0, reduce interval to one-fourth of the normal interval.

Make the initial oil and filter change after the first 500 miles of operation for a reconditioned engine.

Filters are spin-on, throw-away units. They should be changed every 6,000 miles, regardless of oil change.

Drain the crankcase while the engine is warm.

1. Position a drain pan under the engine drain and the oil filters.
2. Remove the engine crankcase drain plug.
3. Unscrew and remove the two oil filters (Fig. 1). A filter wrench may be used to remove the filters but not to install them.
4. Coat each filter gasket surface with a film of clean engine oil and install the filters. Tighten each filter by hand until the gasket contacts the base, and then tighten 1/2 turn further.
5. Replace the crankcase drain plug.
6. Fill the crankcase with oil shown in owner's handbook.
7. Operate the engine until the oil is warm and oil pressure normal; then check for leaks.
8. Check the engine oil level on the dipstick and add oil if necessary to bring level up to the FULL mark.

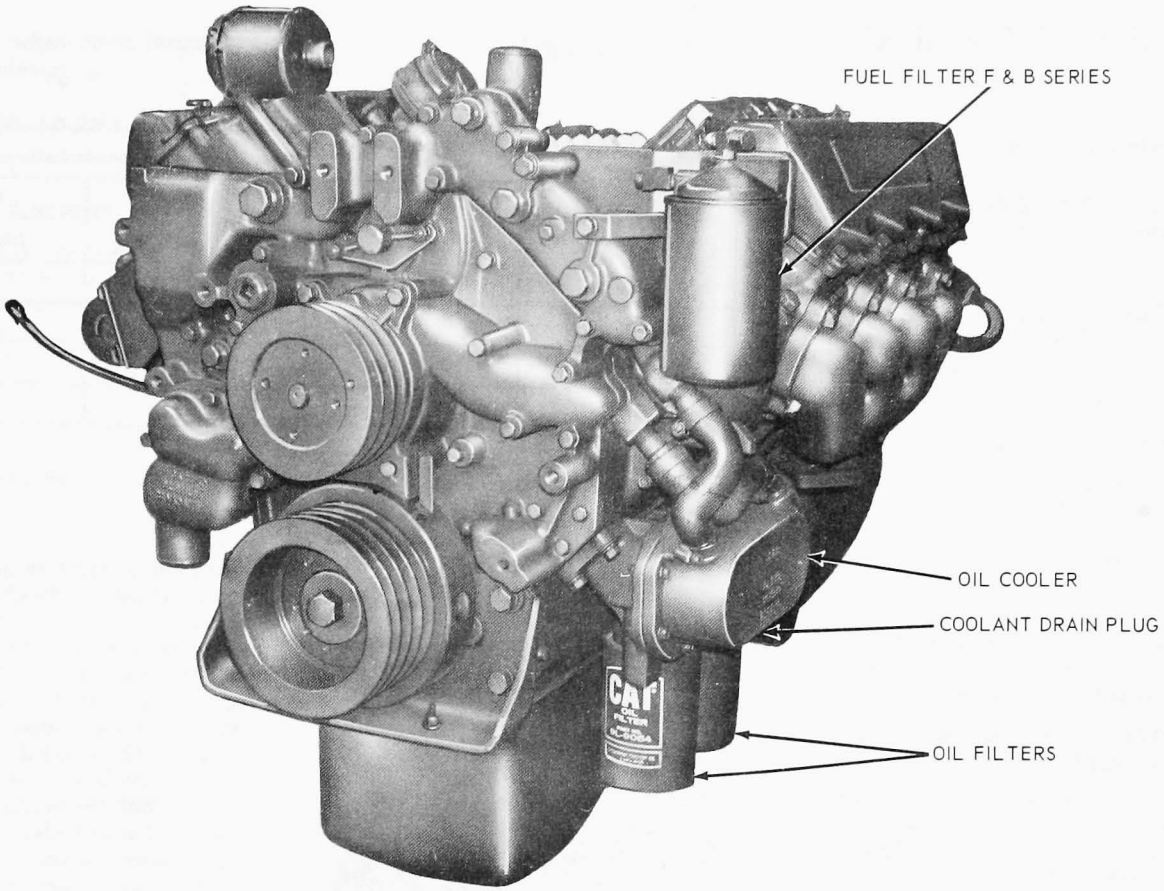

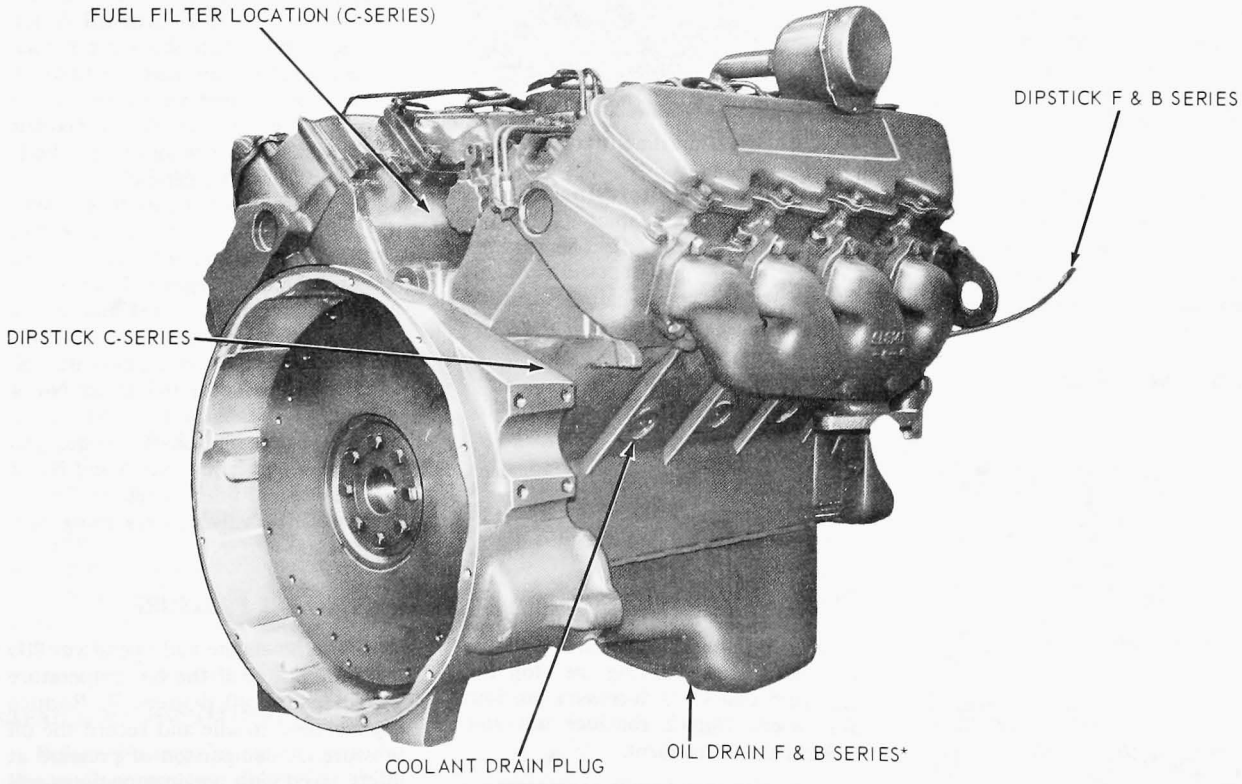

*OIL PAN REVERSED ON C-SERIES

FIG. 1 Ford V-8 Diesel Engine Service Points

Y 1093-A

FORD V-8 DIESEL ENGINES

MAINTENANCE

CHECK TORQUE OF ENGINE MOUNTING BOLTS

Use a ft-lb torque wrench and check the torque effort against the specifications for this engine. Refer to Part 22-05 of the 1973 Truck Shop Manual for procedures and specifications.

CHECK AIR INLET PIPING

Check air intake piping from air cleaner to intake manifold. Check for loose clamps or connections, cracks, punctures, or tears in hose or tubing, collapsing hose, or other damage.

Tighten clamps or replace parts as necessary to insure an airtight air intake system. Make sure that all air goes through the air cleaner.

CHECK ENGINE HIGH AND LOW IDLE SPEED

Check the engine high (governed no-load) rpm and low idle rpm per Fig. 2. Use of a direct-reading tachometer is recommended.

If the high idle or low idle rpm is not to specifications, free up or adjust the throttle linkage before making any adjustment of the governor settings. The idle settings, both high and low, are adjusted at the factory and any deviation from specifications should be due to the throttle linkage assembly or operation.

If throttle linkage adjustment will not correct the idle speeds to specifications, follow the procedure given below to adjust both high and low idle. **Only qualified personnel should perform this operation.**

HIGH AND LOW IDLE RPM

Check the engine rpm with an accurate tachometer. Install the tachometer on the adapter located on the front cover (Fig. 3). The reading taken at this point, with a 1:1 tachometer, will be one-half engine rpm.



FIG. 2 Tachometer Adapter Location

Model	Engine Speed – RPM (Hydraulic Governor)		
	High Idle	Full Load	Low Idle (+0, –10 RPM)
150	3380	3200	525
175	3410	3200	525
200	3255	3000	525
225	3040	2800	525

CY1177-B

FIG. 3 Ford V-8 Diesel Idle RPM

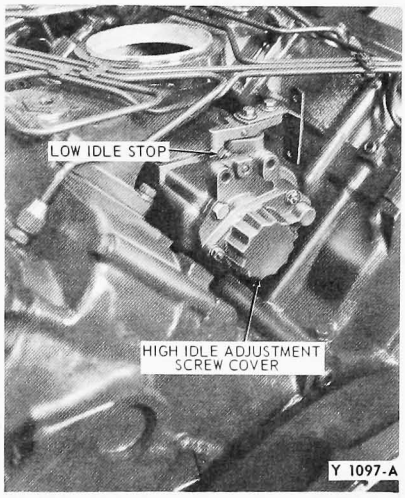

FIG. 4 Idle Adjustment Locations

Remove the high idle adjustment screw cover from the rear of the governor. Turn the high idle adjusting screw (Figs. 4 and 5) clockwise to increase or counterclockwise to decrease high idle speed.

If the adjusting screw requires alignment to install the cover, turn the screw in a clockwise direction the minimum distance required for installation.

Adjust low idle speed by loosening lock nut (Fig. 4) and turning the adjustable stop. Turning the stop IN decreases and OUT increases the low idle speed. Tighten the lock nut and recheck the adjustment.

VALVE CLEARANCE ADJUSTMENT

Valves on this engine are adjusted cold. Make sure that the engine has been stopped for at least twenty minutes before checking or adjusting the valve clearance.

1. Remove both valve covers.
2. Refer to Fig. 6 for cylinder and valve arrangement. Set No. 1 piston on top center of the compression stroke by rotating the crankshaft until the timing mark on the damper is aligned with the timing pointer and number 1 and number 2 exhaust and inlet valves are closed. The rocker arms should be free and each push rod at its lowest point.
3. Loosen the valve adjusting screw lock nuts. Use a standard feeler gauge and adjust the valve rocker arm to valve stem clearance to 0.025 inch for exhaust valves and 0.015 inch for inlet valves (Fig. 7). Tighten the adjusting screw lock nuts. Check the adjustment clearance.
4. Adjust the remaining valves using the procedure above. Use the following sequence: Rotate the crankshaft 180 degrees clockwise (as viewed from the front) and adjust No. 7 and No. 3 exhaust and inlet valves. Rotate the crankshaft 180 degrees clockwise and adjust No. 4 and No. 5 exhaust and inlet valves. Rotate the crankshaft another 180 degrees and adjust No. 6 and No. 8 exhaust and inlet valves.
5. Install the valve covers using new gaskets.

RECORD OIL PRESSURE

Start the engine and operate at 800 to 1000 rpm until the oil temperature gauge reads 140 degrees F. Reduce engine speed to idle and record the oil pressure. A comparison of pressure at idling speed with previous readings will give an indication of progressive wear of lubricating oil pump, bearings, shafts, etc. These readings are more accurate

and reliable when taken immediately after an oil change.

CHECK AND ADJUST DRIVE BELT TENSION

DRIVE BELT TENSIONS

Used belt tension applies to any belt in operation more than ten minutes. To insure proper tension use Burroughs Belt Tension Checking Tool T63L-8620-A. Belts installed in pairs should be replaced in pairs. Belt tension specifications are given at the end of this Part.

ALTERNATOR AND WATER PUMP BELTS

Loosen the alternator mounting bolts and the adjusting bracket bolt. Move the alternator toward or away from the engine until the proper tension is obtained between the water pump pulley and the alternator pulley. Tighten the alternator adjusting bracket bolt and the mounting bolts.

AIR COMPRESSOR BELT

Loosen the air compressor mounting bolts. Slide the compressor in its mounting bracket to obtain the recommended tension between the compressor pulley and the fan pulley (crankshaft damper on a C-Series truck). Tighten the compressor mounting bolts. The air compressor belt should be adjusted whenever the fan belt is adjusted or replaced. Adjust the air compressor belt last.

CHECK RADIATOR COOLANT LEVEL

The coolant level should be maintained at approximately one inch below the filler neck of the radiator.

On L-Series with crossflow radiators, fill until the coolant is 1 inch from the top of the tank-engine cold. **(Caution—Do not operate engine if coolant level is below sight glass).**

CHECK CONDITION OF COOLANT

Coolant water should be soft and free from scale-forming minerals. Add rust inhibitor if necessary. During freezing weather add sufficient ethylene glycol base anti-freeze to the coolant to prevent freeze-up. Do not add rust inhibitor to an anti-freeze solution containing its own rust inhibitor.

CLEAN COOLING SYSTEM

Before cleaning this cooling system, refer to the appropriate Caterpillar Shop Manual for instructions and precautions.

To drain the system: Open radiator drain cock. Remove plugs from the

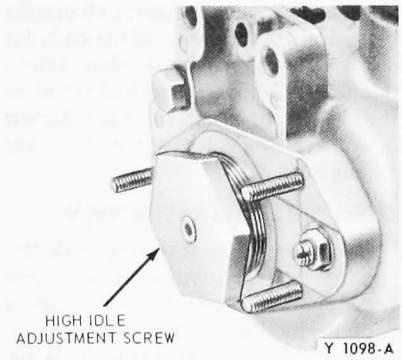

FIG. 5 High Idle Adjustment Screw

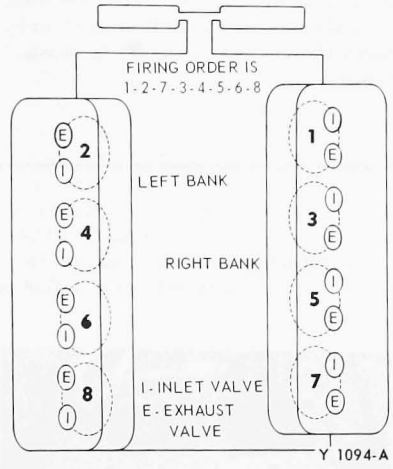

FIG. 6 Cylinder and Valve Arrangement

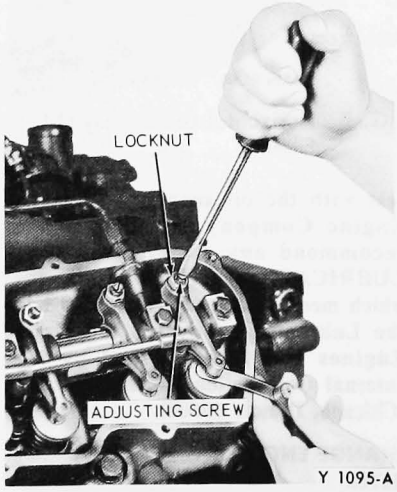

FIG. 7 Adjusting Valve Lash

engine block. Remove plug from the thermostat housing. Remove plug from the oil cooler.

DRAINING AND FILLING THE COOLING SYSTEM

To drain the radiator, open the drain petcock at the bottom of the radiator and drain the coolant into a container to prevent loss of anti-freeze. The radiator will drain faster if the filler cap is removed.

To drain the cylinder block, open the drain cocks at the thermostat housing and oil cooler, and remove the drain plugs from the rear of the cylinder block (one on each side).

To fill the cooling system, install the cylinder block plugs and close the drain cocks at the radiator, thermostat housing and oil cooler. Pour the coolant into the radiator. Operate the engine until operating temperature is reached and check the coolant level.

CHANGE CRANKCASE BREATHER

Dry-type crankcase breathers containing a chemically treated paper element are used on naturally-aspirated engines. Install new elememt— **Do not attempt to clean. Do not use on engines with pressurized systems.**

CLEAN OR REPLACE AIR CLEANER ELEMENT

Cleaning With Compressed Air

1. Direct a jet of clean, dry air from the inside of the filter element perpendicular to the pleats. **Pressure at air nozzle must not exceed 100 psi.**
2. Move the air jet up and down along the pleats, slowly rotating the element until no more dust is being removed. **Be certain that the element is not ruptured by the nozzle or the air jet.**

Cleaning With Water

The elements can be cleaned by washing with water and a good non-sudsing detergent. Direct a jet of clean, dry air from the inside of the filter element. When the loose dust and soot have been removed, the element is ready to be washed.

1. Dissolve the detergent in a small amount of cool water.
2. Add warm (approximately 100 degrees F) water to get the proper proportions of detergent and water (about one cup of detergent to five gallons of water).
3. Soak the element in the solution for at least 15 minutes.
4. Agitate the element for about 2 minutes to loosen the dirt.

Never use gasoline or solvents to clean elements.

5. Rinse the element with clean water until the water coming through the element is clean. Water pressure from a hose or tap should not be over 40 psi. Air-dry the element thoroughly before using.

Mechanized drying methods can be used. However, heated air (maximum

temperature 180 degrees F) must have some circulation. **Do not use light bulbs for drying elements.**

6. After cleaning the filter element, using either air or water, inspect the element for damage. Look for dust on the clean air side, the slightest rupture, or damaged gaskets. A good method to detect ruptures in the element is to place a light inside the element and look toward the light from the outside. Any hole in the element, even the smallest, will pass dust to the engine and cause unnecessary wear.

AIR CLEANER BODY CLEANING AND INSPECTION

Before re-installing the filter element, remove any foreign material (leaves, lint or other foreign matter) that may have collected inside the air cleaner body. Inspect the inside of the body for dents or other damage that would interfere with air flow or with the fins on the element or inside the body. Repair body dents, being careful not to damage sealing surfaces.

CHECK INLET AIR RESTRICTION

The air cleaner furnished with this engine is equipped with an air restriction indicator. Check the air cleaner periodically, judging the service period by the amount of exposure to dusty air. If air inlet restriction exists, the red signal will rise in the viewing window and stay there. If restriction is indicated, remove the air cleaner element and wash or replace it, depending on how many times the air cleaner has been washed previously.

Reset the restriction indicator when servicing the air cleaner.

PRIMING THE FUEL SYSTEM

If air is trapped in the fuel system, the diesel engine either will not start, or will misfire. Loosen the line nut on the fuel line between the fuel filter and the fuel injection pump housing. Operate the starter until the flow of fuel from the filter is continuous and free of bubbles. Tighten fuel line nut. If the engine continues to misfire or smoke, further bleeding is necessary. While the engine is running, loosen each fuel line nut (at the injector) and allow the fuel to flow until it is free of air bubbles. Then tighten the fuel line nut.

CUMMINS DIESEL ENGINES

LUBRICATION

LUBRICATE ACCELERATOR LINKAGE

Lubricate the friction points of the accelerator linkage with the specified lubricant (refer to the Lubricants Chart in Part 50-03) recommended mileage interval.

LUBRICATE ELECTRIC STARTING MOTOR

Add a few drops of clean SAE 30 weight lubricating oil to cranking motor bearings.

ENGINE OIL LEVEL

CUMMINS DIESEL

Keep the oil level between the L and H marks on the dipstick.

CUMMINS DIESEL ENGINES

Cummins Engine Company, Inc., recommends that owners of Cummins Diesels give special consideration to use of heavy duty oils developed for use in diesel engines. Under normal conditions, the oil used should meet the requirements of U.S. Military Specifications MIL-L-2104-B for normally aspirated engines, and MIL-L-2104-B/MIL-L-45199-B for turbocharged or supercharged engines. The responsibility for meeting these specifications, the quality of the product and its performance must necessarily rest with the oil supplier. Cummins Engine Company, Inc., does not recommend any specific brand of LUBRICATION OIL. Many brands which meet specifications are listed in the Lubricating Oils for Industrial Engines booklet published by the Internal Combustion Engine Institute (Chicago, Illinois 60606).

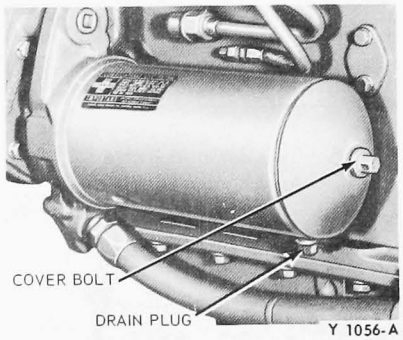

FIG. 8 Horizontal Lubricating Oil Filter



FIG. 9 Examining Oil Filter Bag

CHANGE ENGINE OIL AND REPLACE FILTER

Engine Oil

The kind of oil used, the efficiency of the filtering system and the condition of the engine must be considered in determining when oil needs changing.

The schedule for oil changes is based on average crankcase and filter capacity when both full-flow and by-pass filters are used.

If a by-pass filter is not used, the oil change period must be reduced by one-third.

The safest method for determing oil change is by lubricating oil analysis.

On engines equipped with double sump oil pans, both sumps must be drained when changing oil.

Full-Flow Oil Filter Replacement

1. Drain full-flow lubricating oil filters on all models by removing drain plug (Fig. 8).
2. Loosen filter cover bolt carefully. **The element contains a spring which will separate the head and case when capscrews are loosened. Do not remove case.**
3. Turn filter bag inside out and inspect for bearing metal, grit, etc., (Fig. 9). If metal is found in the bag, an inspection of all connecting rod and

main bearings should be made **at once. Inspect spool gaskets, bag clamp, and spacer mat. If they are not in good condition, replace with new parts.**

Do not attempt to wash and re-use filter bag.

4. Clean all parts thoroughly except bag, gaskets and O-rings.
5. Install a new filter bag as shown in Fig. 10.
6. Insert element, spring end down, in filter case; positioning case to cover with new O-ring(s) and tighten capscrews to secure.

Make certain cover capscrews are tightened evenly to assure a good seal between cover and case.

7. Add approximately one gallon of clean lubricating oil to fill filter case.
8. Check engine oil level after operation; bring level to H mark to replace oil absorbed by new element.

PAPER-TYPE OIL FILTER

If paper element is used by by-pass filter (Fig. 11), change at specified interval. If no by-pass filter is used reduce change by one-third.

1. Remove drain plug from filter case and allow oil to drain.
2. Loosen center bolt and remove filter case from filter head. Some filters use the same case as the bag-type element and should be disassembled in a like manner.
3. Withdraw filter element, inspect, then discard.

Inspect for metal particles. If metal is found, a check of connecting rods and main bearings should be made at once.

4. Remove seal ring from filter head and discard.
5. Check filter case thoroughly.
6. Check to make sure element end seals are in place and install new element over pilot valve assembly.
7. Position new seal ring in place; assemble filter case to head and tighten center bolt (if used) to 30-35 ft-lbs.
8. Check oil level. Run engine and check for leaks.
9. Recheck engine oil level; add oil as necessary to bring oil level to H mark on dipstick.

Always allow oil to drain back to oil pan before checking level.

CHANGE BY-PASS OIL FILTER ELEMENT

Change by-pass filter elements on engines so equipped as follows:

Never use a by-pass filter in place of a full-flow filter.

1. Remove drain plug from bottom of housing and drain oil.
2. Remove clamping ring capscrew and lift off cover.
3. Unscrew pack hold-down assembly; lift out element and hold-down assembly (Fig. 12). Discard element.
4. Clean housing and hold-down assembly in solvent.
5. Inspect hold-down assembly spring and seal. Replace if damaged.
6. Inspect drain plug and connections. Replace plug.
7. On the Cummins by-pass filter, check orifice plug inside oil outlet connection; blow out with air jet to make sure orifice is open and clean.

1. Install ring in filter bag with studs protruding. Fold top of bag inward over ring about 1/2 inch; tuck bag snugly around ring stud bases to assure good seat.

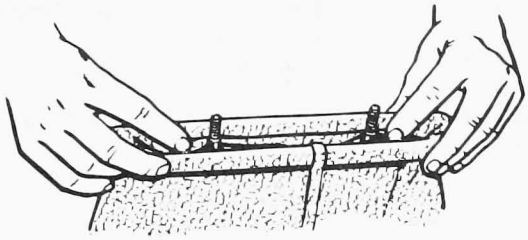

2. Install gasket over studs and against bag.

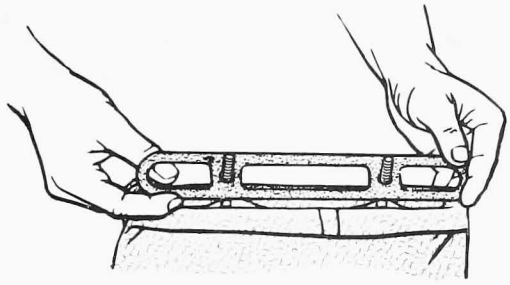

3. Install retainer attached to wire mesh spacer over studs.

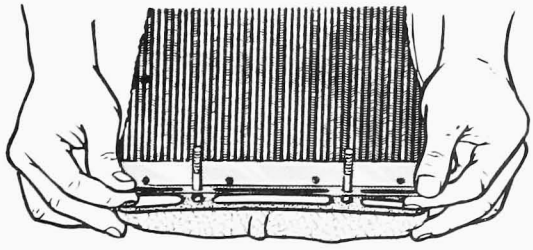

4. Install second gasket over studs and down against spacer retainer.

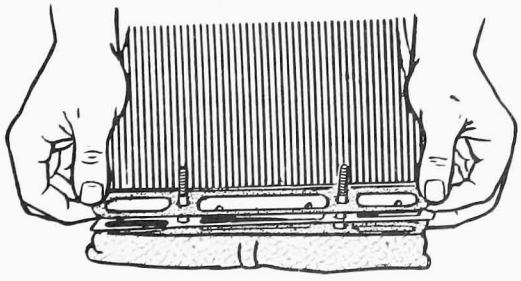

5. Insert ring studs in spool through oil channel.

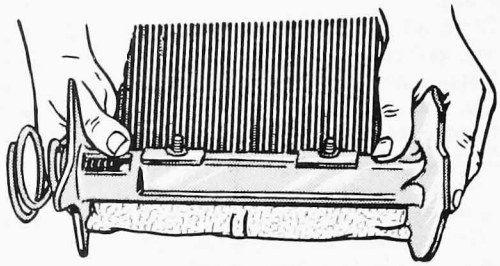

6. Install wing nuts over studs and tighten until nuts are parallel with spool.

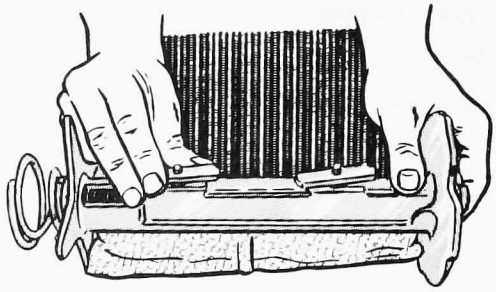

7. Place filter assembly on clean flat surface with wire mesh spacer on top and filter bag on bottom. Roll bag and spacer around spool so that spacer is between bag and studs.

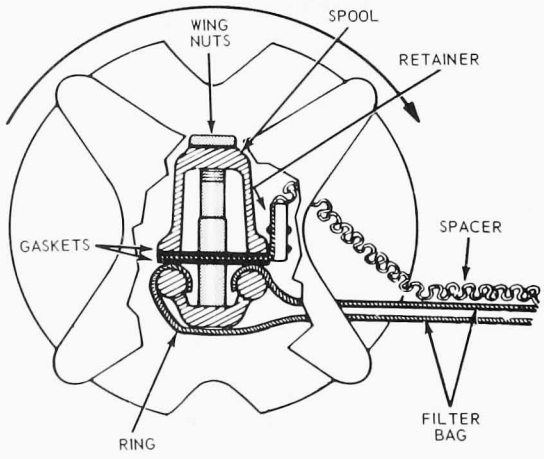

Y 1058-A

FIG. 10 Assembling Full Flow Filter Bag and Spacer— Cummins Diesel

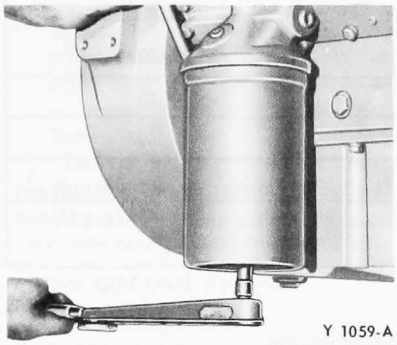

FIG. 11 Changing Paper Filter Element—Cummins Diesel

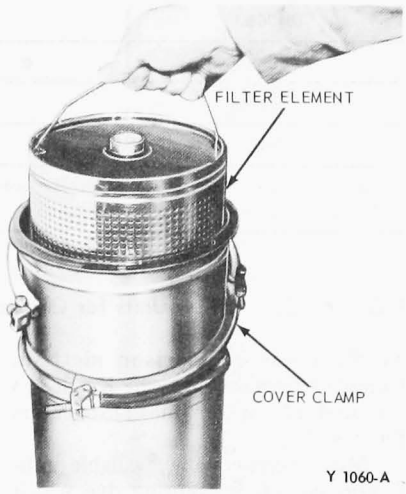

FIG. 12 By-Pass Filter and Element—Cummins Diesel

CUMMINS DIESEL ENGINES

MAINTENANCE

CHECK FAN HUB AND DRIVE PULLEY

Check the fan hub and drive pulley to be sure that they are securely mounted.

Tighten the fan capscrews. Check the drive pulley for looseness or wobble, and, if necessary, remove fan and hub and tighten the shaft nut. Tighten the bracket capscrews.

CHECK AIR INTAKE PIPING

Check air intake piping from air cleaner to intake manifold (Fig. 13). Check for loose clamps or connections, cracks, punctures, or tears in hose or tubing, collapsing hose, or other damage. Tighten clamps or replace parts as necessary to insure an airtight air intake system. Make sure that all air goes through the air cleaner.

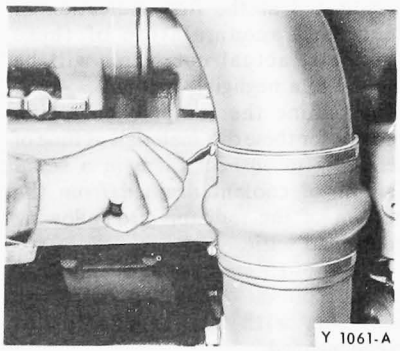

FIG. 13 Checking Air Inlet Piping

DRIVE BELT TENSION ADJUSTMENT—NH-SERIES DIESEL ENGINES

Fan Belts

Loosen the adjusting screw lock nut or the fan hub. Adjust the fan hub adjusting screw to obtain the specified fan belt tension (Specifications Section) and tighten the lock nut.

Water Pump Belts

1. Loosen the alternator adjusting bracket and the alternator to mounting bracket bolts. Loosen the water pump retainer mounting bolts.
2. Pivot the water pump assembly to obtain the specified drive belt tension (Specifications Section) and tighten the water pump retainer bolts to specifications.
3. Adjust the alternator to obtain the specified drive belt tension and tighten the adjusting bracket bolt and alternator to mounting bracket bolts.

DRIVE BELT TENSION ADJUSTMENT—NH-SERIES ENGINES— LN-SERIES TRUCKS

1. Loosen the water pump retainer bolts. Loosen the alternator to mounting bracket bolts and the adjusting bracket bolt. Loosen the adjusting lock nut on the cooling fan hub and back-off the adjusting screw.
2. Adjust the tension of the cooling fan belts to specification (Specifications Section) by means of the adjusting screw and tighten the adjusting lock nut. Pivot the water pump assembly counterclockwise until the specified tension on the pump belts is obtained and tighten the water pump retainer bolts.

CUMMINS DIESEL ENGINES—RECORD OIL PRESSURE

Start the engine and operate at 800 to 1000 rpm until the oil temperature gauge reads 140 degrees F. Reduce engine speed to idle and record the oil pressure. A comparison of pressure at idling speed with previous readings will give an indication of progressive wear of lubricating oil pump, bearings, shafts, etc. These readings are more accurate and reliable when taken immediately after an oil change.

TIGHTEN ENGINE MOUNTING BOLTS

Mounting bolts may occasionally work loose and cause the supports and brackets to wear rapidly. Tighten all mounting bolts or nuts and replace any

broken or lost bolts or capscrews. Refer to Cummins Shop Manual.

STEAM CLEAN ENGINE

There are many reasons why the exterior of the engine should be kept clean. Dirt from the outside will find its way into the fuel and lubricating oil filter cases and into the rocker housings when the covers are removed unless dirt is removed first.

Steam is the most satisfactory method of cleaning a dirty engine or piece of equipment. If steam is not available, use mineral spirits or some other solvent to wash down the engine.

All electrical components and wiring should be protected from the full force of the steam jet.

DRAINING AND FILLING COOLING SYSTEM—NH SERIES ENGINE

To prevent loss of anti-freeze when draining the radiator, attach a hose to the radiator drain cock and drain the coolant from the radiator into a clean container.

To drain the radiator, open the drain cock located at the bottom of the radiator. The cylinder block is drained by opening one drain plug located at the right rear of the block. Also, drain the oil cooler and heat exchanger (if so equipped).

To fill the cooling system, close the drain cocks, venting is automatic.

On downflow radiators, operate the engine and add more coolant, if necessary, to fill the radiator to the proper level. On trucks without a supply tank, fill the radiator one inch above the baffle (or core). On trucks equipped with a supply tank, fill the supply tank 2/3 full.

On L-Series, fill until the coolant is 1 inch from the top of the tank with engine cold. (Caution—Do not operate engine if coolant level is below the lower sight glass). After the initial fill, the coolant **level will drop approximately 1 quart when the engine has been operated about 20 minutes at 2000 rpm. This is due to the displacement of entrapped air.**

CHECK CONDITION OF COOLANT

Periodic tests of engine coolant should be made to insure the frequency of corrosion resistor servicing or concentration of chromate is adequate to control corrosion for the specific condition of operation.

When using plain water in a cooling system with a corrosion resistor (with chromate-type element) or when treating with chromate compounds the concentration of effective inhibitor dissolved in the coolant can be measured by the color comparison method. Cummins Coolant Checking Kit St-993 is available from Cummins Distributors for this check.

Ounces Per Gallon (Oz./Gal.)	Parts Per Million (PPM)	Grains/Gallons (Gr./Gal.)
0.16	850	50
0.32	1700	100
0.50	2550	150

If chromate compounds are used, add enough compound to bring concentration to proper level. Normal usage is one-half (1/2) ounce chromate for each one gallon coolant.

CY1211-B

FIG. 14 Comparison Units for Chromate Concentration

Most commercially available anti-freezes contain a coloring dye which renders the color comparison method ineffective. When colored anti-freezes are present in the coolant effective control of corrosion can be determined by inspecting the coolant for accumulation of reddish-brown or black finely granulated dirt. A small amount of corrosion produces significant quantities of these corrosion products; therefore, if corrosion resistor servicing is adjusted at the first indication of increased accumulation of these products, actual corrosion will be limited to a negligible amount.

Examine the sump of corrosion resistor for these dirt materials at time of servicing or inspect them in a small sample of coolant drained from the bottom of the radiator after allowing coolant to settle.

Use of chromate compound, added to the coolant without a corrosion resistor, with anti-freeze is not recommended.

PH Value Test

1. Separate tubes marked PH are furnished in the test kit. Select a tube and fill to mark with coolant to be checked.
2. Add eight drops of the PH Reagent to tube and mix thoroughly.
3. Insert the tube in the comparator hole marked PH.
4. Compare color of test sample with color standards on either side. Preferred range is 8.3 to 9.5.
5. Wash out test tubes after each test and keep reagent container caps in place.

Chromate Concentration Test

1. Draw sample of coolant and pour into tube marked CHROMATE.
2. Insert sample into comparator, hole marked CHROMATE.
3. Compare color of test sample with color standards on either side. Preferred range (Fig. 14) is 100 to 150 grains per gallon or 1700 to 2500 parts per million (ppm).
4. Wash test tubes thoroughly after each test.

Adjusting Coolant to Specifications

If the tests indicate that the coolant is outside specifications, make an adjustment immediately to prevent corrosion.

If the Cummins Corrosion Resistor is used, change the element or elements and run engine four to six hours; then, check coolant again. In extreme cases it may be necessary to change element a second time. However, the latter condition may be due to a larger coolant system than the corrosion resistor was designed to treat. Note reference on resistor label.

CORROSION RESISTOR ELEMENT REPLACEMENT

Check the coolant chromate concentration to determine if the corrosion resistor element should be changed.

Change the chromate element when the concentration drops below 1700 parts per million. To change the element, perform the following procedure.

1. Close the shut-off valves on the inlet and drain lines of the corrosion resistor assembly. Unscrew the drain plug at the bottom of the housing (Fig. 15).
2. Remove the cover retaining bolts. Remove the cover (with hose attached) and gasket. Discard the gasket. Remove the upper plate, element, lower plate and the spring from the housing. Discard the element.
3. Polish the surfaces of both plates. If less than one-half of the upper and lower surfaces of each plate can be exposed by polishing, replace the plate.
4. Install the spring and lower plate. Remove the transparent bag from the new resistor element, and install the element in the housing

5. Install the upper plate, gasket and cover. Install the drain plug, and open the shut-off valves in the corrosion resistor inlet and drain lines.

Do not add any radiator sealers containing water soluble oil to the cooling system as it will make the corrosion resistor plates inoperative.

CLEAN COOLING SYSTEM

The cooling system must be clean to do its work properly. Scale in the system slows down heat absorption from water jackets and heat rejection from the radiator. **Use clean water which will not clog any of the hundreds of small passages in the radiator or water passages in the block.**

Clean out radiator cores, heater cores, oil cooler, and block passages which have become clogged with scale and sediment by chemical cleaning, neutralizing and flushing.

Chemical Cleaning

The best way to insure an efficient cooling system is to prevent formation of rust and scale by using a Cummins Corrosion Resistor, but if they have collected, the system must be chemically cleaned. Use a good cooling system cleaner such as sodium bisulphate or oxalic acid followed by neutralizer and flushing.

Pressure Flushing

Flush the radiator and block when anti-freeze is added or removed, or before installing a Corrosion Resistor on a used engine.

When pressure flushing the radiator, open the upper and lower hose connections and screw the radiator cap on tight. Remove thermostats from housing and flush block with water. Use hose connections on both upper and lower connections to make the operation easier. Attach the flushing gun nozzle to the lower hose connection and let water run until the radiator is full. When full, apply air pressure **gradually** to avoid damage to the core. Shut off air and allow radiator to refill, then apply air pressure. Repeat until water coming from radiator is clean. **Do not backflush cooling systems that have a water shut-off valve in the heater system.**

Sediment and dirt settles into pockets in the block as well as the radiator core. Remove thermostats from housing and flush block with water. Partially restrict the lower opening until the block fills up. Apply air pressure and force water from the lower opening. Repeat the process until stream of water coming from block is clean.

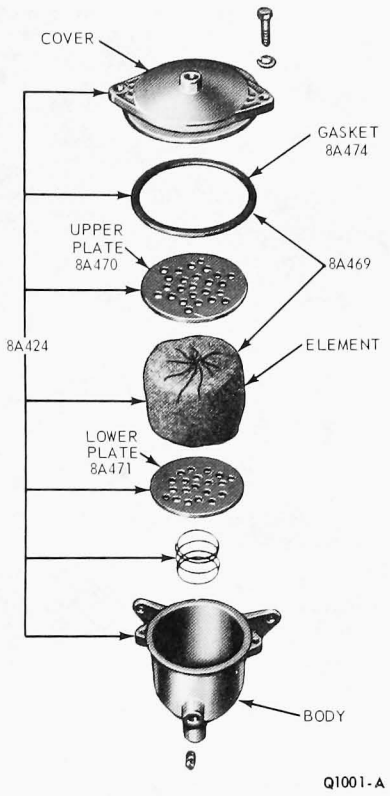

FIG. 15 Corrosion Resistor

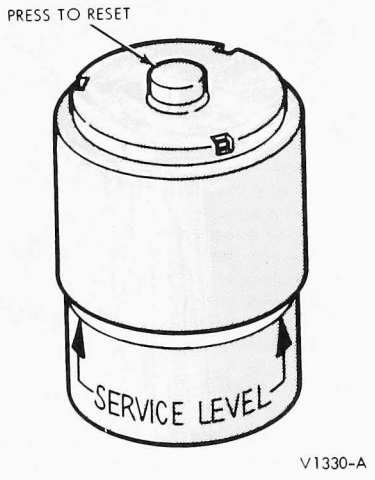

FIG. 16 Mechanical Restriction Indicator Gauge

CHECK INLET AIR RESTRICTION

The best method for determining dry-type air cleaner maintenance periods is through air restriction checks.

Check Air Inlet Restriction at Engine

1. On naturally aspirated engines attach a vacuum gauge or water manometer in the middle of the intake manifold or on the air intake piping. When located in the air intake piping, the adapter must be perpendicular to the air flow and not more than 6 inches from the air intake manifold connection.
2. On turbocharged or supercharged engines, attach the checking fixture on pipe diameter upstream from the supercharger or turbocharger in a straight section of tubing.
3. Idle the engine until normal operating temperature is reached.
4. Operate engine at rated speed full-load and take reading from vacuum gauge or manometer. Air restriction must not exceed 25 inches of water or 1.8 inches of mercury.
5. If air restriction exceeds 25 inches of water or 1.8 inches of mercury:

Clean or replace dry-type cleaner element.

Replace damaged air piping, rain shield or housing.

Remove excessive bends or other source of restriction in air piping.

Check Air Inlet Restriction at Cleaner

A mechanical restriction indicator is installed on the air cleaner. The gauge shows completely red in the indicator window when restriction reaches 25 inches of water (Fig. 16).

CHANGE CRANKCASE BREATHER

Dry-type crankcase breathers containing a chemically treated paper element are used on naturally aspirated engines. Install new element— **Do not attempt to clean. Do not use on engines with pressurized systems.**

CHECK AIR BOX DRAIN TUBES

During normal engine operation, water vapor from the air charge, as well as a slight amount of fuel and lubricating oil fumes, condense and settle on the bottom of the air box. This condensation is removed by the air box pressure through air box drain tubes mounted on the side of the cylinder block (Fig. 17).

The air box drain tubes must be open at all times. With the engine running, check for air discharge by placing your finger at the outlet end of the drain tube. If no air flow is felt, the drain tube is plugged and must be removed and cleaned. Also, remove the air box covers and wipe out the liquid accumulation on the bottom of the cylinder block air box. Then, blow out the drain passages with compressed air. Reinstall the air box covers and drain tubes. Tighten the air box cover bolts to 8-12 ft-lb torque.

FUEL PUMP ADJUSTMENTS

Only those fuel pump adjustments described herein should be performed in the truck. Make the adjustments in the order given.

In-chassis adjustments of the fuel pump are based on fuel manifold pressure and fuel supply vacuum. To determine these pressures follow the procedures in Group 25 of the 1973 Truck Shop Manual.

The following adjustment procedures refer to forward throttle screw and rear throttle screw. The forward throttle screw is closer to the drive end of the fuel pump (Fig. 18).

Before Making Adjustments

1. Operate the engine until the oil temperature reaches 140 degrees to 160 degress F. Make all fuel pump or injector settings on a hot engine.
2. Install a vacuum gauge Cummins (ST-434) in the fuel supply line (Fig. 19). Check the suction restriction of the fuel supply line. If the vacuum reading exceeds 8 inches of mercury, determine the cause and correct.
3. Adjust valve and injector lash to specifications.
4. Check high-idle or maximum governed speed.

Rear Throttle screw Adjustment

1. Connect a manifold pressure gauge Cummins (ST-435) at the manifold pressure gauge connection. Check the fuel manifold pressure at rated speed and full load.
2. Turn the rear throttle screw out until the highest fuel manifold pressure reading is obtained.
3. Turn the rear throttle screw in to reduce the fuel manifold pressure 5 psi.

Do not increase the rear throttle adjustment more than 5 psi or the engine speed at which peak torque occurs will change. Throttle restriction over 5 psi allows unauthorized adjustment to raise fuel manifold pressure, thereby overfueling the engine.

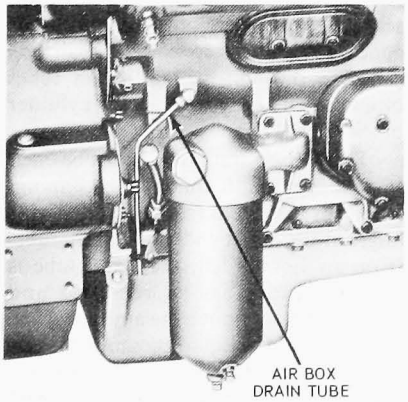

FIG. 17 Air Box Drain Tube

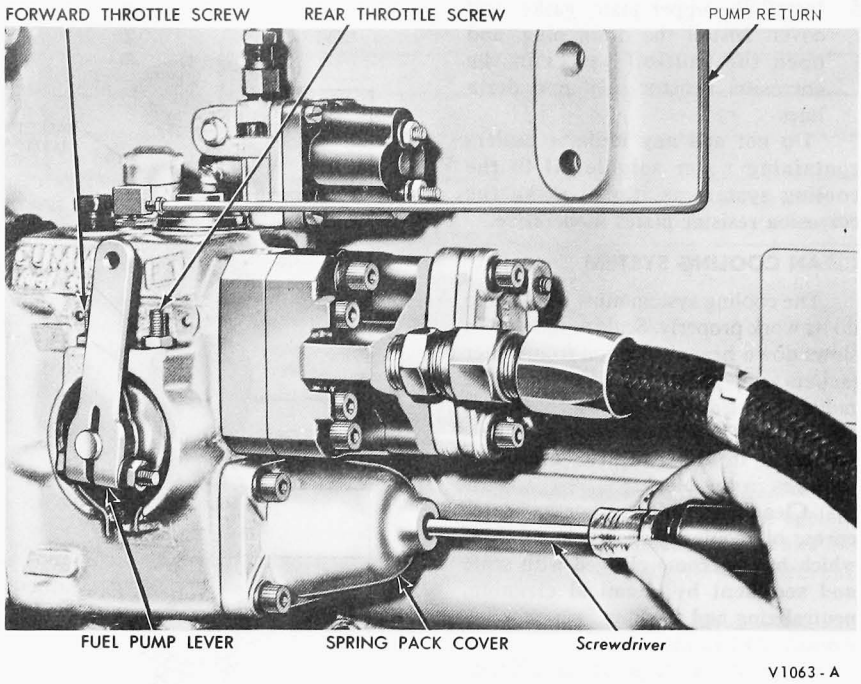

FIG. 18 Fuel Pump Adjustments

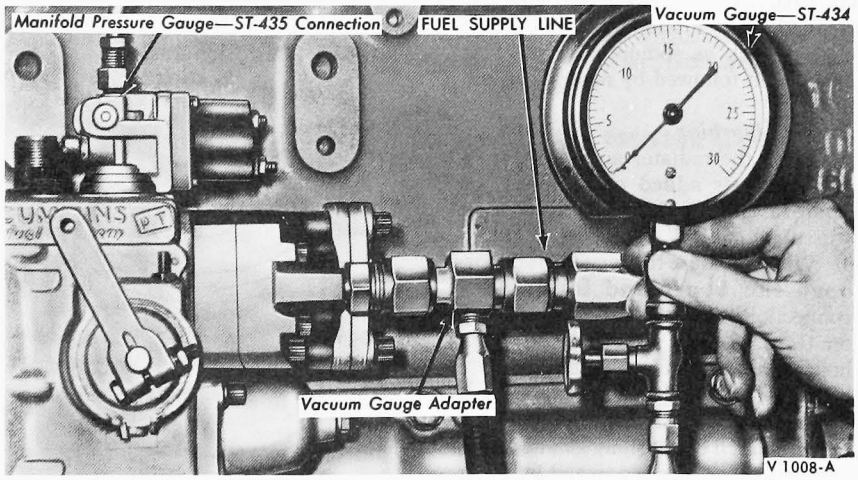

FIG. 19 Fuel Pump Gauge Connections

Forward Throttle Screw or Throttle Leakage Adjustment

1. With the engine operating at idle speed, turn in the forward throttle screw until the engine gains speed. Back the screw out two full turns.
2. Stop the engine and remove the spring pack cover plug and adjust the idle governor screw (Fig. 18) to idle the engine at specified rpm (see specifications).
3. Operate the engine until it is purged of the air let in during Step 1.
4. Check the idle speed.
5. Check deceleration; if it is too slow, the throttle leakage is excessive. If the engine falters or dies when idle speed is reached, the throttle leakage is too low. Adjust the screw to obtain permissible deceleration time.
6. Any change in the desired idle speed is made with the governor idle screw. Follow the sequence under Idle Speed Adjustments.

Idle Speed Adjustments

1. With the engine stopped, remove the pipe plug from the spring pack cover.
2. The idle adjustment screw is held in position with

screw in to increase, or out to decrease the speed (Fig. 18).

3. Replace the pipe plug. With the engine running, air which collected in the spring pack housing will cause a rough idle temporarily. This will stabilize when the housing fills with fuel.

CLEAN FUEL PUMP SCREEN AND MAGNET

To clean filter screen:

1. Loosen and remove cap at top of fuel pump. Remove spring. Lift out filter screen assembly (Fig. 20).
2. Remove top screen retainer from filter screen assembly.

Some filter screens do not contain a magnet. If not, a magnet can be obtained from any Cummins distributor. Magnetic action will remove any ferrous metal particles that may enter fuel system.

3. Clean screen and magnet in cleaning solvent and dry with compressed air.
4. Replace screen retainer and install filter screen assembly in fuel pump with hole down. Replace spring on top of filter screen assembly.
5. Replace cap, tighten to 20-25 ft-lbs.

CLEAN INJECTORS

Refer to the applicable Cummins Diesel service manual for cleaning and inspection of the injectors.

ADJUST INJECTOR AND VALVE LASH

Refer to the applicable Cummins Diesel Service Manual for injector and valve lash adjustments.

CROSSHEAD ADJUSTMENTS

Refer to the applicable Cummins Diesel Service Manual for the crosshead adjustment procedure.

INJECTOR PLUNGER ADJUSTMENT

Refer to the applicable Cummins Diesel Serivce Manual for the injector plunger adjustment procedure.

FUEL FILTER ELEMENT REPLACEMENT

The fuel filter (Fig. 21) has a disposable-type element. Replace it at the specified interval, even though it may appear serviceable. Unscrew the combination filter case and element and discard it. Install the new filter case and element assembly and tighten it by hand until the O-ring seal touches the filter



FIG. 20 Removing Fuel Pump Filter Screen

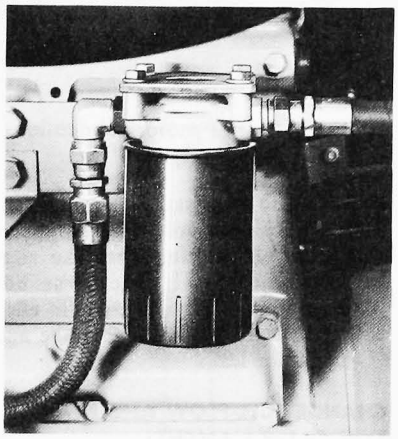

FIG. 21 Typical Engine Mounted Fuel Filter—NH-Series Engines

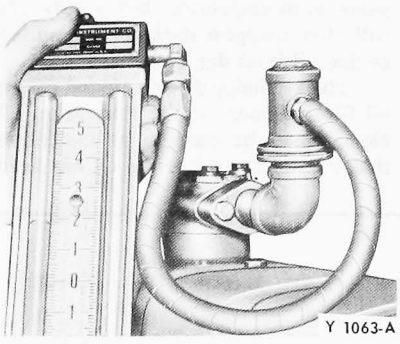

FIG. 22 Checking Blow-By Under Load

head. Then tighten it an additional 1/4 to 1/2 turn by hand. If the replacement filter doesn't have an integral O-ring seal, use a new O-ring for installation.

CHECK ENGINE BLOW-BY

Engine blow-by, or escape of combustion gases past pistons and liners, is usually caused by worn or stuck piston rings, worn cylinders liners, or worn pistons.

Blow-by can be detected by running the engine and observing the gas escape from the lubricating oil filler hole with cap or breather open or removed. There is always some vapor or gas escape at this point due to heated oil and piston movement, but distinct puffs indicate blow-by. Experience and comparison with other units operating at the same speed are needed to make a conclusion as to the extent of blow-by. Normally, excessive blow-by is accompanied by oil consumption.

Cummins Distributors are equipped to check engines for blow-by under loaded conditions, with special tools, to determine if blow-by is excessive (Fig. 22).

CHECK THERMOSTAT

Most Cummins Engines are equipped with either high (170/185 degrees F) or low (160/175 degrees F) thermostats, depending on engine application.

The lower value indicates where thermostat starts to open and the higher value where it is fully open. Check stamping on thermostat; install same range new thermostat as that removed.

The opening and closing of thermostats can be checked against a thermometer while immersed in water as the water is brought up to temperature by heating.

TIGHTEN MANIFOLD NUTS OR CAPSCREWS

Check exhaust, intake and water manifolds mounting hardware for tightness; correct deficiencies as required.

Refer to the applicable Cummins Service Manual.

CLEAN STARTER MOTOR AND ALTERNATOR

Dust and dirt, if allowed to accumulate in the alternator and cranking motor, will cause excessive wear of bearings, brushes and commutator.

Remove the cover band and/or rubber shield and blow out the dust and dirt with compressed air.

DETROIT DIESEL ENGINES

LUBRICATION

LUBRICATE ACCELERATOR LINKAGE

Lubricate the friction points of the accelerator linkage with the specified lubricant (Part 50-03) at the recommended mileage interval.

LUBRICATE STARTER MOTOR

Some starting motors do not require lubrication except during overhaul. However, motors (Fig. 23) which are provided with lubrication fittings (grease cups, hinge cap oilers, or oil tubes sealed with pipe plugs) should be lubricated at the specified interval.

Add 8 to 10 drops of oil, of the same grade as used in the engine, to hinge cap oilers; if sealed tubes are provided, remove the pipe plugs, add oil and reseal the tubes. Grease cups should be turned down one turn. Refill the grease cups, if necessary.

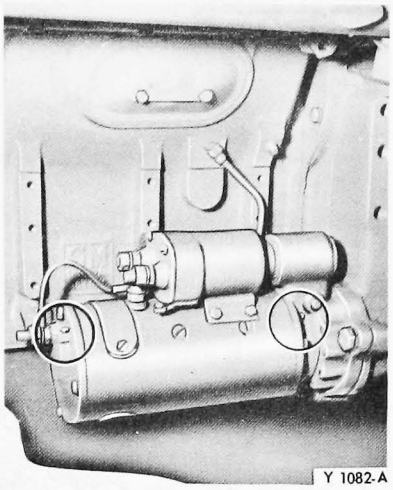

FIG. 23 Starter Motor Lubrication Points—Typical

ENGINE OIL LEVEL

DETROIT DIESEL

Do not operate the engine with the oil level below the LOW mark.

Do not add oil to any engine to raise the oil level above the mark indicating FULL.

CHANGE ENGINE OIL

1. Remove the oil pan drain plug, drain oil into a container, then replace the plug.

Install new filter elements each time the oil is changed.

2. Fill the crankcase with the specified engine oil shown in the owner's handbook.

Overfilling the crankcase may contribute to abnormal oil consumption, high oil temperatures, and may also result in oil leaking past the rear crankcase oil seal which was not intended to operate submerged in oil.

3. Operate the engine at fast idle and check for leaks.

CHANGE FULL-FLOW AND BY-PASS TYPE FILTER ELEMENTS

With the use of detergent lubricating oils. The color of the lubricant has lost value as an indicator of oil cleanliness or proper filter action. Due to the exceptional ability of the detergent compounds to hold minute carbon particles in suspension, **heavy duty oils will always appear dark-colored on the engine oil level dipstick.**

Heavy sludge deposits found on the oil filter element at the time of an oil change must be taken as an indication that the detergency of the oil has been exhausted. When this occurs, the oil drain interval should be decreased. The removal of abrasive dust, metal particles, and carbon must be ensured by replacement of the oil filter element at the time the engine oil is changed.

Selection of a reliable oil supplier, strict observation of his oil change period recommendations, and proper filter maintenance will ensure trouble-free lubrication and longer engine life.

The oil filter elements should be changed every time the engine oil is changed.

The element in either the full-flow filter or by-pass filter assembly (Figs. 24 and 25) may be replaced as follows:

1. Remove the drain plug from the shell or base and drain the oil from the filter.
2. Back out the center stud and withdraw the shell, element, and stud as an assembly. Then, remove and discard the filter element.
3. Clean out the old oil from the filter shell and adapter or base.
4. Install a new shell gasket in the filter adapter or base.
5. Install a new filter element over the center stud within the shell. Then, place the shell, element, and stud assembly in position on the filter adapter or base and tighten the center stud carefully to avoid damage to the gasket.
6. Install the drain plug.
7. Start and run the engine for a short period and check for oil leaks. After any oil leaks have been corrected and the engine has been stopped long enough for the oil from various parts of the engine to drain back to the crankcase, bring the oil to the proper level on the dipstick.

DETROIT DIESEL ENGINES

MAINTENANCE

The following maintenance operations are to be performed **only by Detroit Diesel Service Dealers using the procedures in the applicable Detroit Diesel Service Manual:**

Check Fan Hub and Drive Pulley.
Check Thermostats.
Check Engine Blow-By.
Clean Injector Inlet Screen.
Clean Injectors.
Clean Blower Screen and Check Seals.
Clean Crankcase Breather.
Adjust Injectors and Valve Lash.
Tighten Mounting Bolts.
Check Engine Emergency Shut-Down Cable.

CHECK COOLING SYSTEM HOSES

Check the cooling system hoses for deterioration or damage and replace, if necessary (Fig. 26). Check all of the hose clamps to make sure they are tight and properly seated on the hoses.

REPLACE FUEL FILTER AND STRAINER ELEMENTS

1. With the engine stopped, place a container under the strainer or filter and open the drain cock (Figs. 27 and 28). Loosen the cover bolt just

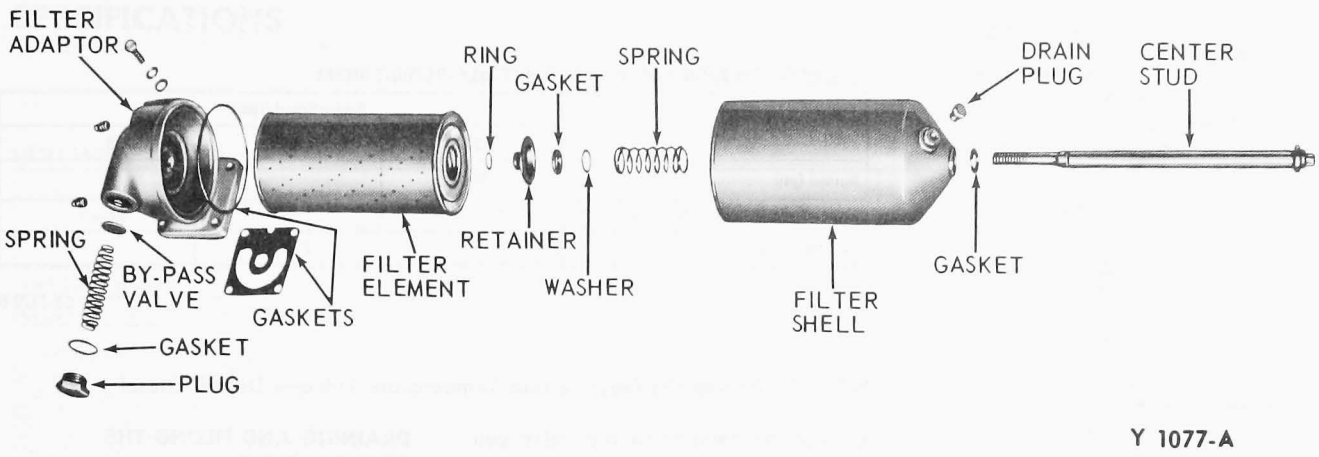

FIG. 24 Full-Flow Filter—Cummins Diesel

enough to allow the fuel to drain out freely. Then, close the drain cock.

The wiring harness, starting motor, or other electrical equipment must be shielded during the filter change, since fuel oil can permanently damage the electrical insulation.

2. While supporting the shell, unscrew the cover bolt and remove the shell and the element.
3. Remove and discard the element and the shell gasket.
4. Wash the shell thoroughly with fuel oil and dry it with compressed air.
5. Examine the element seat and the retaining ring to make sure they have not slipped out of place. Check the spring by pressing on the element seat. When released, the seat must return against the retaining ring.

The element seat, spring, washer and seal cannot be removed from the strainer shell. If necessary, the shell assembly must be replaced. However, the components of the filter shell are serviced.

6. Place a new element over the stud and down against the seat. Make sure the drain cock is closed; then, fill the shell about two-thirds full with clean fuel oil.

Thoroughly soak the density-type STRAINER element in clean fuel oil before installing it. This will expel any air entrapped in the element and is conducive to a faster initial start.

7. Install a new gasket in the recess of the shell.
8. Place the shell and element in position under the cover. Then, thread the cover bolt into the stud.

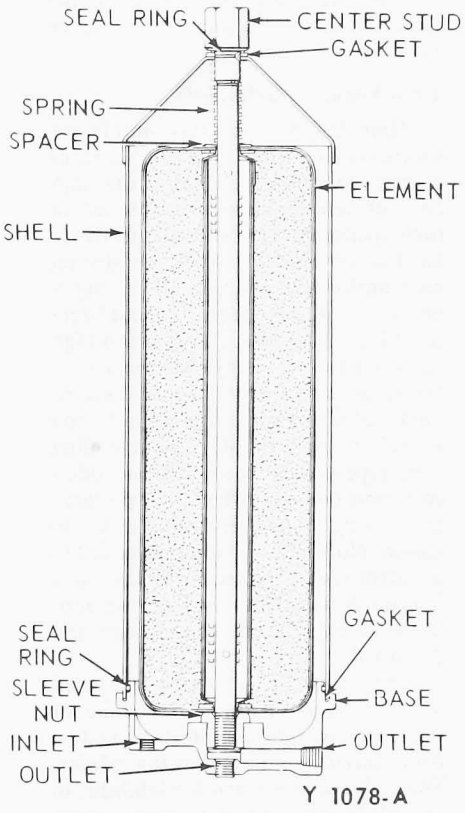

FIG. 25 By-Pass Type Oil Filter—Cummins Diesel

On a W-Series truck with Detroit Diesel 8V-71 Engine the drain cock must be pointing to the rear of the engine to prevent interference with the cab retaining arm.

9. With the shell and gasket properly positioned, tighten the cover bolt just enough to prevent leakage.

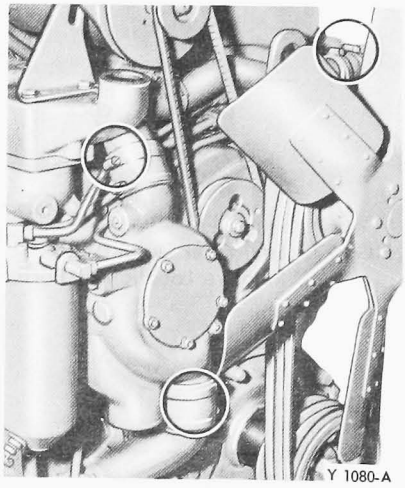

FIG. 26 Cooling System Hoses Check Points

10. Remove the filler plug in the cover and complete filling of the shell with fuel. Primer J 5956 may be used to prime the entire fuel system.
11. Start the engine and check the fuel system for leaks.

CLEAN COOLING SYSTEM

Drain and flush the cooling system to remove the anti-freeze solution in the spring and the rust inhibitor in the fall, thus preparing the cooling system for the next olution. If necessary, use a cooling system cleaner and reverse flush. Refill the cooling system with clean soft water and add rust inhibitor or anti-freeze. Start the engine and check for leaks. **CAUTION—Do not backflush cooling systems that have a water shut-off valve in the heater**

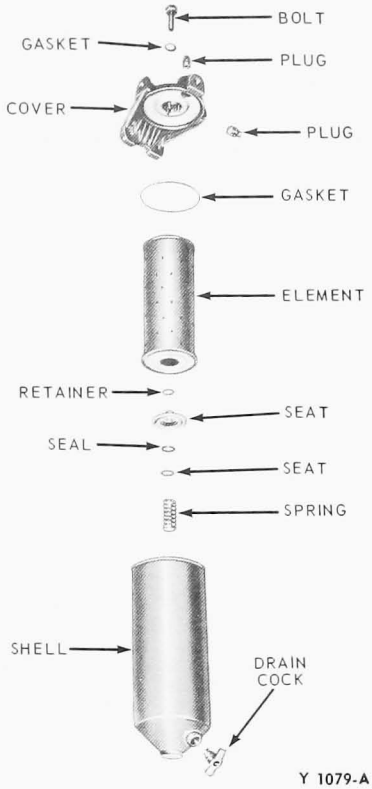

FIG. 27 Fuel Filter Details and Relative Location of Parts.

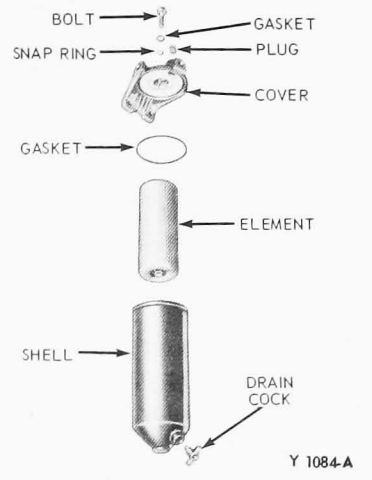

FIG. 28 Fuel Strainer Details and Relative Location of Parts

ENGINE OIL PRESSURE AND TEMPERATURE TABLE–DETROIT DIESEL

	Engine Speed (rpm)		
	1200	1800	2100
Normal (psi)	40-55	50-70	
Minimum for Safe Operation (psi)	25	28	30
Oil Temperature –°F	20-235		

CY 1170-B

FIG. 29 Engine Oil Pressure and Temperature Table— Detroit Diesel

system, or damage to the valve can result.

WATER FILTER AND CONDITIONER

For maintenance of the engine coolant and water filter, refer to the Detroit Diesel Engine Maintenance Manual.

ANTI-FREEZE SOLUTIONS

High boiling point type anti-freeze solutions are used in diesel engines during the winter because of the high coolant temperature encountered in their operation. Alcohol base anti-freeze has too low a boiling point. An alcohol base anti-freeze solution protecting a unit to minus 20 degrees F would begin to boil at 180 degrees F, whereas a high boiling point type ethylene glycol anti-freeze solution protecting a unit to minus 20 degrees F would begin to boil at 223 degrees F. Most high boiling point type anti-freeze solutions include a corrosion inhibitor which will protect the cooling system through the winter season. No additives should be added to a system that is protected by this anti-freeze solution. In the spring, the anti-freeze solution should be drained and discarded.

The corrosion inhibitor in a used anti-freeze solution will not be of sufficient strength to protect the system from corrosion the following winter. The addition of a corrosion inhibitor to an anti-freeze solution to permit reuse could cause a reaction within the solution. A precipitation could result and clog the cooling passages, necessitating extensive engine and radiator cleaning.

DRAINING AND FILLING THE COOLING SYSTEM

To drain the radiator, open the drain petcock at the bottom of the radiator and drain the coolant into a container to prevent loss of anti-freeze. The radiator will drain faster if the filler cap is removed.

To drain the cylinder block, open the two drain petcocks on each side of the engine block and on the bottom of the oil cooler.

To fill the cooling system, close the drain petcocks and pour the coolant into the radiator. Operate the engine until operating temperature is obtained and check the coolant level.

DETROIT DIESEL ENGINES—RECORD OIL PRESSURE

Check and record the engine oil pressure at maximum no-load rpm. The table lists the specified engine oil pressures and temperatures. These readings are more accurate and reliable when taken immediately after an oil change (Fig. 29).

SPECIFICATIONS

DIESEL ENGINE CRANKCASE REFILL CAPACITIES

Engine	Truck Model Usage – Standard and Optional	Crankcase Approximate Capacity (Quarts) [c]		Engine	Truck Model Usage – Standard and Optional	Crankcase Approximate Capacity (Quarts) [c]	
		U.S.	Imperial			U.S.	Imperial
Ford V-8 Diesel	All 6000, 7000 and 8000 Series	10 [a]	8-3/8 [a]	NHC-250 (Cummins)	All 9000 Series	20 [b]	16-5/8 [b]
6V-53N (Detroit)	All 800 L-Series	19 [a]	15-7/8 [a]	NTC-270-E (Cummins)	L, LN, LT, LNT-9000 W, WT-9000	28 [b]	23-3/8 [b]
6-71N (Detroit)	L, LN, LT, LNT-9000 W, WT-9000	18 [a]	15 [a]	NTC-270-CT (Cummins)	LTS-9000	28 [b]	23-3/8 [b]
8V-71NE (Detroit)	L, LT, W, WT-9000	23 [a]	19-1/8 [a]	NTC-335 (Cummins)	L, LN, LT, LNT-9000	28 [b]	23-3/8 [b]
8V-71N (Detroit)	L, LT, W, WT-9000	23 [a]	19-1/8 [a]	N-927 (Cummins)	All 9000 Series	28 [b]	23-3/8 [b]
NH-230 (Cummins)	All 9000 Series (Standard)	20 [b]	16-5/8 [b]	V-903 (Cummins)	L, LT, W, WT-9000	18 [b]	15 [b]

[a] Add 2 U.S. quarts extra when changing standard full flow oil filters.

[b] Add 4 U.S. quarts extra when changing standard full flow oil filter.

[c] Add 12 U.S. quarts (10-1/4 Imperial quarts) when equipped with optional bypass filter.

CY 1469-A

Diesel Engine Drive Belt Tension (Lbs.) – Using Belt Tension Gauge Tool T63L-8620-A

Application	Initial Belt		Reset (1) Tension	
	Min.	Max.	Min.	Max.
Single Belt	120	150	90	120
Dual Belt – Front	120	150	90	120
– Rear	115	165	85	130

(1) Reset tensions apply to any used belt or a belt that has been in operation for more than 10 minutes.

CY1470-A

PART 50-23 Ignition Systems

COMPONENT INDEX	Page
LUBRICATION	
Distributor Bushing (Oil Cup)	23-02
MAINTENANCE	
Distributor Cap and Rotor – Clean and Inspect	23-04
Distributor Spark Advance – Check and Adjust	23-03
Distributor Points – Check and Adjust Dwell	23-03
Ignition Wiring Inspection – Secondary	23-03
Spark Control System Advance and Retard Vacuum Check	23-03

COMPONENT INDEX	Page
MAINTENANCE (Cont)	
Spark Delay Valve Replacement	23-04
Spark Plugs – Inspect Clean Adjust and Test	23-03
Thermal Switch Operation Check	23-03
Vacuum Advance/Retard Cut-In Speed Check	23-03
PRE-DELIVERY	
Initial Ignition Timing – Check and Adjust	23-01
SPECIFICATIONS	23-04

PRE-DELIVERY

CHECK AND ADJUST IGNITION TIMING—INITIAL TIMING, MECHANICAL AND VACUUM ADVANCE AND VACUUM RETARD

TIMING MARK LOCATIONS

The timing marks and their locations are illustrated in Figs. 1, 2 and 3.

The timing mark on the 240 engine in the Econoline and the 240 and 300 engines in P-Series trucks is a machined groove on the flywheel (Standard Transmission) or a stamped line on the flexplate (Automatic Transmission). It is viewed through an opening in the engine rear cover plate (Fig. 3) on the lower left side of the engine. A rubber plug covers the opening to prevent the entrance of dust and dirt. Steel stamped degree marks ranging from 0 degree or top dead center (TDC) to 14 degrees, before top dead center (BTDC) are located at the edge of the opening.

When checking the timing, the timing mark on the flywheel (or flexplate) should be in line with the specified degree mark on the engine rear cover plate opening when the timing light flashes.

INITIAL IGNITION TIMING

Because of the high engine idle speeds required on exhaust emission control engines, precautions must be taken when setting the initial ignition timing to be sure that the distributor is not partially advanced. To be sure that no distributor advance is taking place, idle speed should be reduced to 600 rpm **after the vacuum hoses have been disconnected from the diaphragm unit and plugged.** Reset the idle to the specified rpm after adjusting the initial timing. Initial ignition timing and idle specifications for 1973 Trucks are given in the 1973 Truck Specifications Book.

1. Clean and mark the timing marks.
2. Disconnect the vacuum line (singlediaphragm distributors) or vacuum lines (dualdiaphragm distributor), and plug the disconnected vacuum line(s) (Fig. 4).
3. Connect a timing light to the No. 1 cylinder spark plug wire. Connect an engine speed tachometer.
4. Start the engine and reduce the engine idle speed to 600 rpm to be sure that the centrifugal advance is not operating. Adjust the initial ignition timing to specifications by rotating the distributor in the proper direction.
5. Check the centrifugal advance for proper operation. Start the engine and accelerate it to approximately 2000 rpm. If the ignition timing advances, the centrifugal advance mechanism is functioning properly.

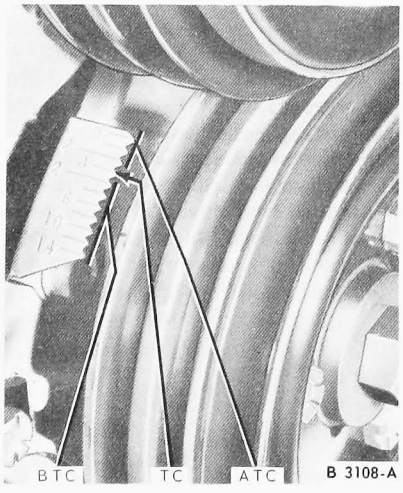

FIG. 1 Typical Engine Timing Marks—Pointer Mounted

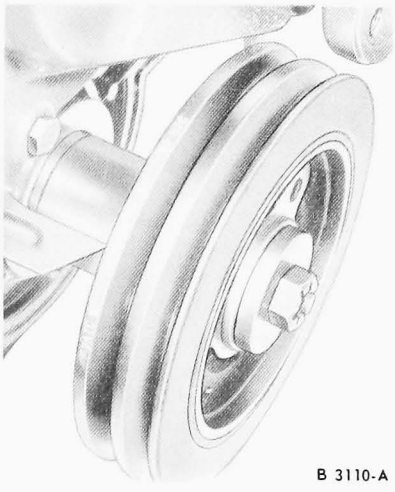

FIG. 2 Typical Engine Timing Marks—Pulley Mounted

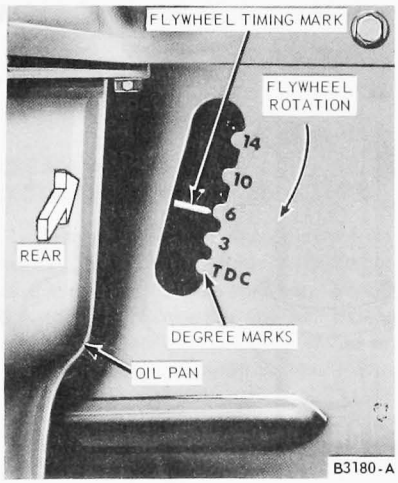

FIG. 3 Engine Timing Marks—240 Engine—Econoline and 240, and 300 Engines—P-Series Trucks

Note the engine speed when the advance begins and the amount of advance. Stop the engine.

6. Unplug the carburetor source vacuum line and connect it to the distributor vacuum advance unit (outer diaphragm on dual diaphragm distributors). Start the engine and accelerate it to approximately 2000 rpm. Note the engine speed when the advance begins and the amount of advance. Advance of the ignition timing should begin sooner and advance farther than when checking the centrifugal advance alone. Stop the engine.
7. Check the vacuum retard operation on dual diaphragm distributors. Connect the intake manifold vacuum line to the inner (retard) diaphragm side of the vacuum advance. Reset the carburetor to normal idle speed. The initial timing should retard to approximately TDC, if the initial ignition timing is correct. On some engines it will go as low a 4 degrees ATDC (degrees after top dead center).

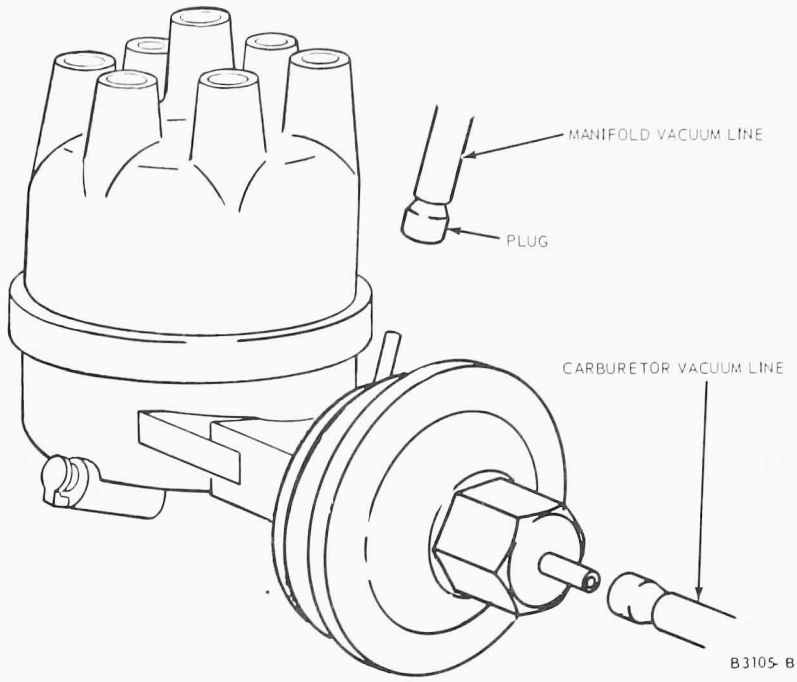

FIG. 4 Adjusting Dual Diaphragm Distributor

8. If the vacuum advance or vacuum retard (dual diaphragm distributors) is not functioning properly (refer to steps 6 and 7 above), remove the distributor and check it on a distributor tester. Replace the dual diaphragm unit if the retard portion is out of calibration, the advance portion cannot be calibrated to specifications, or either of the diaphragms are leaking.

LUBRICATION

LUBRICATE DISTRIBUTOR BUSHING (OIL CUP)

Squirt a few drops of SAE 10W engine oil into the distributor oil cup, if so equipped.

MAINTENANCE

INSPECT SECONDARY IGNITION WIRING

Inspect the secondary (high-tension) wiring for cracked insulation or indications of heat damage to the outer cover. Be sure that the spark plug wires are fully seated on the spark plugs and that the connections to the coil and distributor are bottomed in the receptacles provided.

REPLACE SPARK PLUGS

Removal

1. Remove the wire from each spark plug by grasping, twisting and then pulling the moulded cap of the wire by hand only. **Do not pull on the wire because the wire connection inside the cap may become separated or the weatherseal may be damaged.**
2. Clean the area around each spark plug port with compressed air, then remove the spark plugs.

Adjustment

Set the spark plug gap to specifications by bending the ground electrode (Fig. 5). **Never bend the center electrode.**

Installation

1. Install the spark plugs and torque each plug to 15-20 ft-lbs.
2. Connect the spark plug wires. Push all weather seals into position.

CHECK DISTRIBUTOR POINTS AND ADJUST DWELL

Use a dwell meter to check the contact dwell. It is not advisable to use a feeler gauge to adjust or to check the gap of used breaker points because the roughness of the points makes an accurate gap reading or setting impossible. Sand or file the breaker points and check and adjust the alignment. Check the spring tension. Check the contact dwell following the instructions of the dwell meter manufacturer.

BREAKER POINT ALIGNMENT

The pivoted-type breaker points used in Motorcraft distributors should be accurately aligned and strike squarely to assure normal breaker point life.

1. Turn the distributor cam so that the breaker points are closed and check the alignment of the points.



FIG. 5 Checking Spark Plug Gap

2. Using the tool shown in Fig. 6 and **using very light pressure,** align the breaker points to make full face contact by bending the stationary breaker point bracket (Fig. 6). **Do not bend the breaker arm.**
3. After the breaker points have been properly aligned, adjust the breaker point gap or dwell.

BREAKER POINT SPRING TENSION

To check the spring tension, place the hooked end of the spring tension gauge over the movable breaker point, then pull the gauge at a right angle (90 degrees) to the movable arm until the breaker points just start to open (Fig. 7). If the tension is not within specifications, adjust the spring tension.

To adjust the spring tension (Fig. 8):

1. Disconnect the primary and condenser leads at the breaker point primary terminal.
2. Loosen the nut holding the spring in position. **Move the spring toward the breaker arm pivot to decrease tension and in the opposite direction to increase tension.**
3. Tighten the locknut, then check spring tension. Repeat the adjustment until the specified spring tension is obtained.
4. Install the primary and condenser leads with the lockwasher and tighten the nut securely.

CHECK VACUUM ADVANCE/ RETARD CUT-IN SPEED

ALL TRUCKS BELOW 6000 G.V.W.

The complete test procedures covering the advance/retard cut-in speeds are covered in Group 23 of the 1973 Truck Shop Manual.

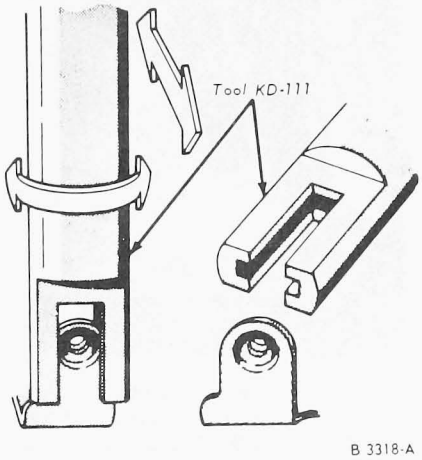

FIG. 6 Using Alignment Tool

CHECK OPERATION OF THERMAL SWITCH (TRS SPARK CONTROL SYSTEM)

ALL TRUCKS BELOW 6000 G.V.W.

Test procedures covering the thermal switch are in Volume VI of this manual.

CHECK SPARK CONTROL SYSTEM ADVANCE AND RETARD VACUUM (TRS SPARK CONTROL SYSTEM)

ALL TRUCKS BELOW 6000 G.V.W.

Using a tee fitting, install a vacuum gauge to the distributor diaphragm fitting. With the engine running, a minimum of 6 inches of **steady** vacuum should be obtained. A reading of 12 inches of vacuum is preferred. A low vacuum reading or a fluctuating vacuum indicates a restriction in the system. On vehicles equipped with a dual diaphragm distributor, take a reading at both the advance and retard diaphragms. To adjust the distributor diaphragm, refer to Group 23 of the 1973 Truck Shop Manual.

CHECK AND ADJUST DISTRIBUTOR SPARK ADVANCE

Remove distributor, install on test stand and adjust spark advance to the specifications in the 1973 Truck Specifications Book.

REPLACE SPARK DELAY VALVE

Refer to Volume VI of this manual, for spark delay replacement procedures.

CLEAN AND INSPECT DISTRIBUTOR CAP AND ROTOR

Remove the distributor cap and inspect for cracks. Also check the inside of the cap for carbon build-up. Check the contact points for erosion. Also, remove the rotor and check for cracks or a bent or corroded contact arm.

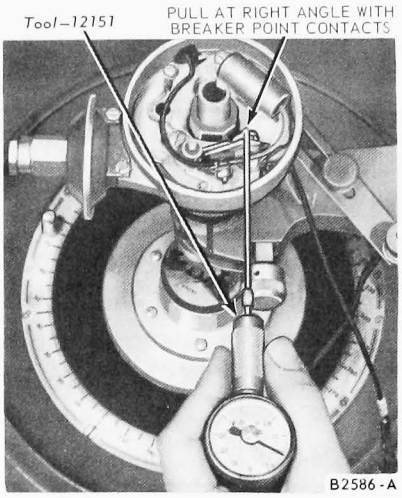

FIG. 7 Checking Breaker Point Spring Tension

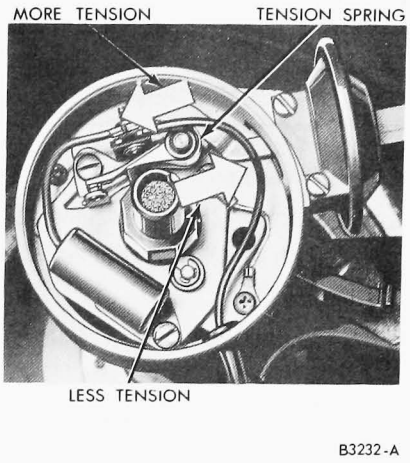

FIG. 8 Adjusting Spring Tension—Pivot-Type Points

SPECIFICATIONS

Refer to the Truck Specifications Book for all ignition system specifications.

PART 50-24 Fuel Systems—Gasoline

COMPONENT INDEX	Page	COMPONENT INDEX	Page
LUBRICATION		MAINTENANCE (Cont.)	
Oil Bath Air Cleaner Cleaning	24-02	Fuel Filters	24-02
Oil Bath Air Cleaner Oil Level	24-02	PRE-DELIVERY	
MAINTENANCE		Accelerator Pedal Operation	24-01
Air Cleaner Thermostatic Valve – Check	24-02	Air Cleaner Oil Level Check – Oil Bath Type	24-01
Carburetor Adjustments		Automatic Choke Operation	24-01
Idle Speed and Fuel Mixture	24-03	Engine Idle Speed – Check and Adjust	24-01
Carter Model YF 1-V	24-06	Fuel Lines and Filter – Inspect for Leaks	24-01
Holley 2-V and 4-V	24-08	Fuel Tank Mounting Check	24-01
Motorcraft Model 2100-D	24-07	Throttle Linkage and Wide Open Throttle Position Check	24-01
Carburetor Air Cleaner Filter Replacement	24-02	SPECIFICATIONS	24-10
Choke External Linkage Cleaning	24-02		
Choke Plate Pulldown and Fast Idle Cam Clearance	24-08		

PRE-DELIVERY

CHECK OIL BATH AIR CLEANER OIL LEVEL

Remove the reservoir from the air cleaner body. Fill the reservoir to the oil level mark if necessary with the specified motor oil. **Do not overfill the reservoir.**

ACCELERATOR PEDAL OPERATION

Check for full return, and sufficient pedal height to open throttle fully. (Remove air cleaner, hold choke plate open depress accelerator pedal fully and observe position of throttle plate. Plate should be in vertical position.) Check for binding or looseness, and adjust if necessary.

CHECK THROTTLE LINKAGE AND WIDE OPEN THROTTLE POSITION

Inspect the throttle linkage for proper installation. Remove the air cleaner, and with the accelerator fully depressed, observe the position of the carburetor throttle plate(s). They should be vertical (wide open position).

Check accelerator for sticking or binding and for full return and sufficient height to fully open throttle.

AUTOMATIC CHOKE OPERATION

Check the choke shaft for wear and excessive looseness or binding. Inspect the choke plate for nicked edges and for ease of operation and free it if necessary. Remove the choke thermostatic spring housing and make sure all carbon and foreign material has been removed from the automatic choke housing. Check the operation of the choke piston in the choke housing to make certain it has free movement.

CHECK AND ADJUST ENGINE IDLE SPEED

Refer to the Maintenance Section of this Part for the engine idle adjustment procedures.

INSPECT FUEL LINES AND FILTER FOR LEAKS

With the engine stopped, examine the fuel line connections for wetness or washed or stained areas that might indicate a fuel leak. Start the engine and observe all the connections for fuel seepage. Tighten or replace fuel lines as necessary.

CHECK FUEL TANK MOUNTING

Inspect the fuel tank mounting brackets and straps to be sure the fuel tanks are securely attached to the vehicle. Inspect the fuel line(s) at the tank(s) to be sure they do not leak. On Bronco, Econoline and F-100 4 x 2 and 4 x 4, be sure the sealed gas cap is not leaking. Make corrections as required.

LUBRICATION

CHECK OIL BATH AIR CLEANER OIL LEVEL

Remove the reservoir from the air cleaner body. Fill the reservoir to the oil level mark with the specified motor oil. **Do not overfill the reservoir. Inspect the gasket or seal between the reservoir and the air cleaner body. Replace the gasket or seal if damaged.**

CLEAN OIL BATH AIR CLEANER AND REFILL RESERVOIR

1. Remove the wing nut attaching the air cleaner to the carburetor and remove the air cleaner.
2. Remove the cover and drain the oil from the reservoir. Wash all the air cleaner parts in a suitable cleaning solvent. Dry them with compressed air.
3. Inspect the gasket between the oil reservoir chamber and cleaner body and replace it if necessary.
4. Saturate the filter element with engine oil.
5. Fill the oil reservoir to the full mark with the recommended engine oil.
6. Install the air cleaner on the carburetor.

MAINTENANCE

CLEAN CHOKE EXTERNAL LINKAGE

Examine the choke external linkage for free operation. If the linkage appears to be sticking, or is dirty, clean the linkage using a brush and common mineral-spirits type cleaning fluid.

AIR CLEANER THERMOSTATIC VALVE

Check operation. During warm-up period: when heated air entering air intake duct is less than 75 degrees F., valve plate should be in the up (heat-on) position; when temperature of heated air entering air intake duct reaches 105 degrees F., valve plate should be in the down (heat-off) position.

REPLACE CARBURETOR AIR CLEANER FILTER

1. Remove the wing nut attaching the air cleaner assembly to the carburetor. Disconnect the crankcase ventilation system hose at the air cleaner and remove the assembly.
2. Install a new air cleaner mounting gasket on the carburetor, if necessary.
3. Install the air cleaner body on the carburetor so that the word **Front faces the front.**
4. Place the air cleaner filter element in the air cleaner body.
5. Install the cover and tighten the wing nut.
6. Connect the crankcase vent hose to the air cleaner.

FUEL FILTER REPLACEMENT

DISPOSABLE FILTER

1. Unscrew the filter housing from the fuel pump, and remove the filter element and gasket. Discard the element and gasket. Clean the filter housing in cleaning solvent.
2. Place a new filter element over the spout in the fuel pump valve housing cover. **Be sure to use the proper type element for the installation.** Coat a new gasket with light engine oil and position the gasket on the filter housing (Figs. 1 and 2). Thread the filter housing onto the fuel pump. Hand tighten the filter housing until the gasket contacts the pump, and then advance it 1/8 turn.
3. Start the engine and check for leaks.

IN-LINE FUEL FILTER

The in-line fuel filter used on all engines is of one piece construction and cannot be cleaned. Replace the filter if it becomes clogged or restricted.

1. Remove the air cleaner.
2. Loosen the retaining clamp securing the fuel inlet hose to the fuel filter.
3. Unscrew the fuel filter from the carburetor. Disconnect the fuel filter from the hose and discard the retaining clamp.
4. Install a new clamp on the inlet hose and connect the hose to the filter. Thread filter into the carburetor inlet port. Tighten the filter.
5. Position the fuel line hose clamp and crimp or tighten the clamp securely.
6. Start the engine and check for fuel leaks.

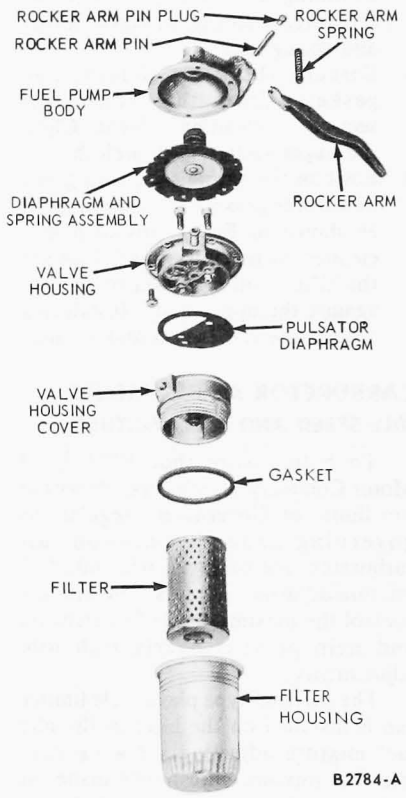

FIG. 1 Carter Fuel Pump Assembly—300 H.D., 330, 361 and 391 CID Engines

7. Install the air cleaner.

IN-LINE FUEL FILTER—500-800 SERIES—WITH ELECTRIC FUEL PUMP

1. Unscrew the lower section from the upper section and remove the filter

element and gasket (Fig. 3). Discard the element and gasket.
2. Clean the lower section in cleaning solvent. Clean the upper section with a cloth.
3. Coat a new gasket with light engine oil and position the gasket on the lower section.
4. Place a new filter element in the lower section.
5. Thread the lower section onto the upper section until the gasket contacts the upper section. Turn the lower section an additional 1/8 turn.

IN-LINE FUEL FILTER—850-900 SERIES—WITH ELECTRIC FUEL PUMP

1. Remove the drain plug from the filter bowl, and drain the fuel from the bowl into a suitable container (Fig. 4).
2. Remove the center bolt and washer, then remove the filter bowl and mounting gasket (Fig. 5). Remove the filter element, gaskets, spring and spring seat.
3. Discard the filter element and gaskets. Clean the filter lower section in cleaning solvent. Clean the upper section with a cloth.
4. Position the spring seat, spring and new lower gaskets in the filter bowl as shown in Fig. 5. Install a new element in the filter bowl. Position the filter and new upper gaskets against the upper body. Install and tighten the center bolt and washer.

CARBURETOR ADJUSTMENTS

IDLE SPEED AND FUEL MIXTURE

To help assure that 1973 Ford Motor Company vehicles operate within the limits of Government regulations governing exhaust emission, all carburetors are equipped with idle fuel mixture adjusting limiters. The limiters control the maximum idle fuel richness and help prevent overly rich idle adjustments.

The external-type plastic idle limiter cap is installed on the head of the idle fuel mixture adjusting screw(s). Any idle fuel mixture adjustment made on carburetors having this type of limiter must be within the range of the idle adjusting limiter. **Under no circumstances are the idle adjusting limiters or the limiter stops on the carburetor to be mutilated or deformed to render the limiter inoperative.** On a Motorcraft Model 2100-D 2-V carburetor; the power valve cover must be installed with the limiter stops on the cover in position to provide a positive stop for the tabs on the idle adjusting limiters (Fig. 6).

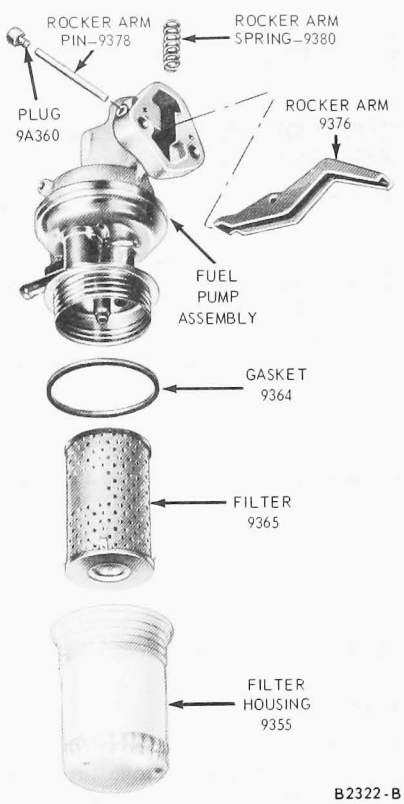

FIG. 2 Carter Sealed Design Fuel Pump Assembly— 240, 300, 360 and 390 CID Engines

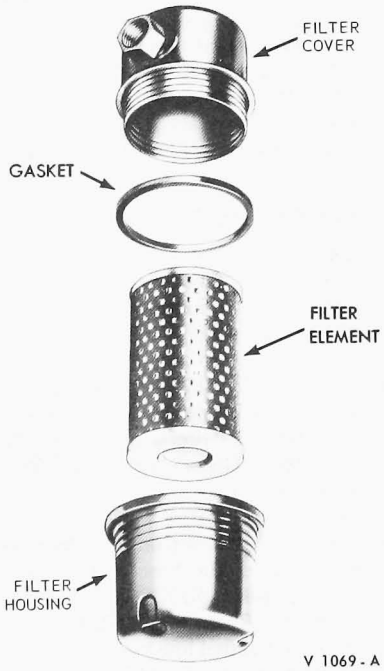

FIG. 3 Typical In-Line Fuel Filter—500-800 Series With Electric Fuel Pump

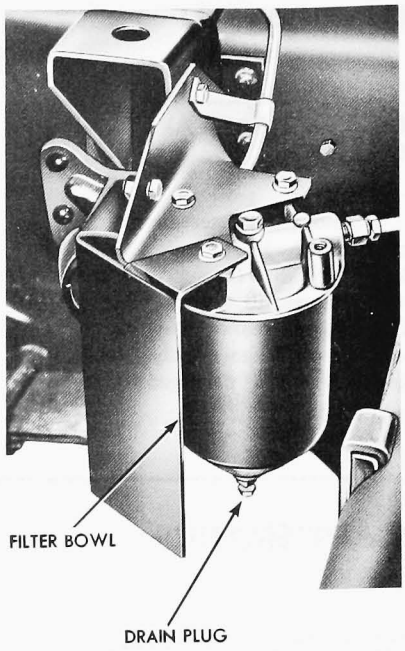

FIG. 4 Fuel Filter Installation—850-900 Series—With Electric Fuel Pump

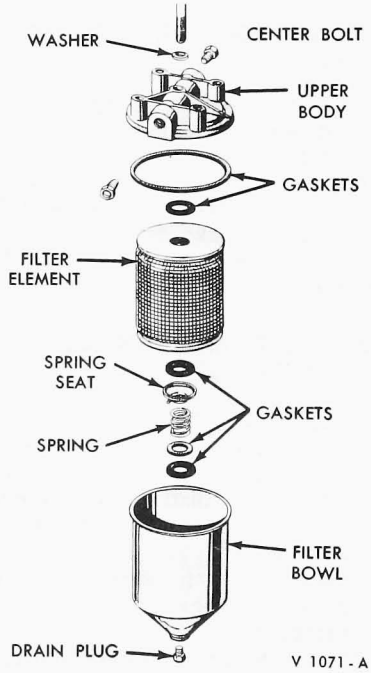

FIG. 5 Fuel Filter Assembly

A satisfactory idle should be obtainable within the range of the idle adjusting limiters, if all other engine systems are operating within specifications.

Following are the normal procedures necessary to properly adjust

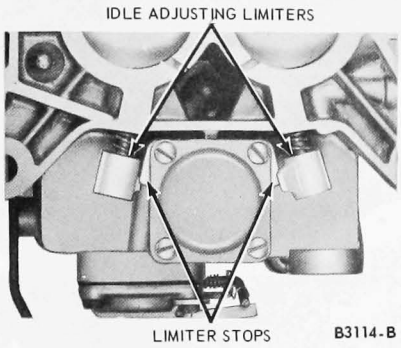

FIG. 6 Motorcraft Model 2100-D 2-V Idle Adjusting Limiters and Limiter Stops—Bottom View

the engine idle speed and fuel mixture. The specific operations should be followed in the sequence given whenever the idle speed or idle fuel adjustments are made.

In isolated cases, a satisfactory idle condition may not be achieved by performing the normal procedures. If this occurs, refer to Supplemental Idle Speed and Fuel Mixture Procedures.

Normal Idle Fuel Settings—Engine Off

1. Set the idle fuel mixture screw(s) and limiter cap(s) to the full counterclockwise position of the limiter cap(s) as illustrated in Figures 7, 8 and 9.
2. Back off the idle speed adjusting screw until the throttle plate(s) seat in the throttle bore(s).
3. Be sure the dashpot or solenoid (if so equipped) plunger is not interfering with the throttle lever (Fig. 10).

It may be necessary to loosen the dashpot to allow the throttle plate to seat in the throttle bore.

4. Turn the idle speed adjusting screw inward until it just makes the contact with the screw stop on the throttle shaft and lever assembly, and then turn the screw inward 1 1/2 turns to establish a preliminary idle speed adjustment (Figs. 10, 11 and 12).

Normal Idle Fuel Settings—Engine On

Set the parking brake while making idle mixture and speed adjustments.

1. The engine and underhood temperatures must be stabilized before idle adjustments are made. Run the engine a minimum of 20 minutes at 1500 rpm. This can be done by positioning the fast idle screw on the intermediate stop of the fast idle cam.
2. Check the initial ignition timing and the distributor advance and retard. Use an accurate reading tachometer

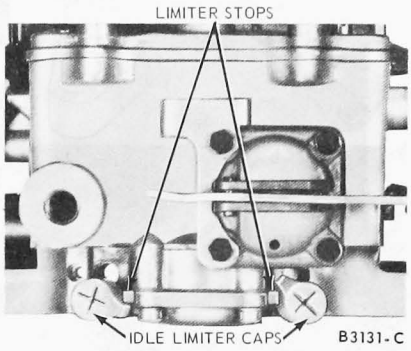

FIG. 7 Idle Fuel Mixture Limiter Caps—Motorcraft Model 2100-D 2-V

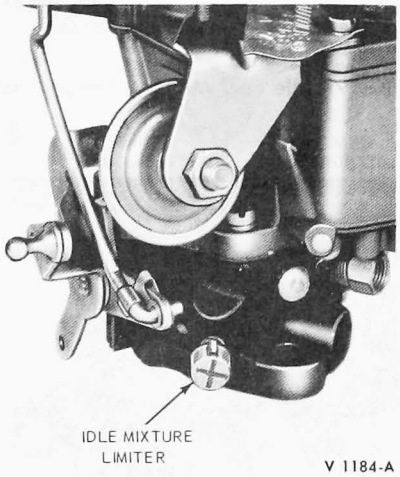

FIG. 8 Idle Fuel Mixture Limiter Cap—Carter Model YF-1-V

when checking the initial ignition timing and idle fuel mixture and speed.

3. On a vehicle with a manual-shift transmission, the idle setting must be made only when the transmission is in **neutral.**

On a vehicle with an automatic transmission, the idle adjustment is made with the parking brake on and the transmission selector lever in the Drive range, except as noted when using an exhaust gas analyzer.

4. Be sure the choke plate is in the full-open position.
5. Turn the headlights on high beam, to place the alternator under a load condition in order to properly adjust the specified engine idle.
6. The final idle speed adjustment is made with the air conditioner (if so equipped) turned OFF.
7. Adjust the engine curb idle rpm to specifications. The tachometer reading (rpm) must be taken with the air cleaner installed. On vehicles with less than 50 miles, set the idle speed approximately 25 rpm below specifications to allow for an idle rpm increase as the engine loosens up in the first 100 miles of driving.

On carburetors equipped with a solenoid throttle positioner (Fig. 12), turn the solenoid adjusting nut in or out to obtain the specified rpm. Disconnect the solenoid lead wire at the bullet connector near the wiring harness, then adjust the carburetor throttle stop screw to obtain 500 rpm with the automatic transmission in NEUTRAL. Connect the solenoid lead wire and open the throttle slightly by hand. The solenoid plunger will follow the throttle lever and remain in the fully extended position as long as the ignition is on and the solenoid energized.

If it is not possible to adjust the idle speed with the air cleaner installed, remove it and make the adjustment. Then replace the air cleaner and check again for the specified rpm.

8. Turn the idle mixture adjusting screw inward to obtain the smoothest idle possible within the range of the idle limiter.

Check for idle smoothness only with the air cleaner installed.

Supplemental Idle Speed and Fuel Mixture Procedures

If a satisfactory idle condition is not obtained after performing the preceding normal idle fuel settings, additional checks of engine systems must be performed.

1. The following items should be checked and, if required, corrected.
   a. Vacuum leak(s)—Refer to the Wiring and Vacuum Diagrams Manual (Form 7795P-73) for vacuum schematic diagrams and the location of the vacuum lines.
   b. Ignition system wiring continuity.
   c. Spark plugs.
   d. Distributor breaker point dwell angle.
   e. Distributor point condition.
   f. Initial ignition timing.

In certain instances, it may be possible that the idle condition is not as good as normally expected. It is suggested that the customer with a new vehicle be advised that the vehicle be driven 50 to 100 miles. Then, when the engine friction has been reduced, the idle condition should be improved. If, after this break-in period, the idle condition is believed to be unsatisfactory, readjust the engine idle

speed to specification and observe for a satisfactory idle.

2. If the idle condition is not improved after the items in Step 1 have been checked, perform the following engine mechanical checks:
   a. Fuel level.
   b. Crankcase ventilation system.
   c. Valve clearance, using the collapsed tappet method on hydraulic valve lifters.
   d. Engine compression.
3. After verification of all engine systems has been made, there may be isolated cases where a satisfactory idle condition has not been obtained, due possibly to a lean idle fuel mixture. If this condition is encountered, check the air-fuel ratio with the aid of an exhaust gas analyzer, and adjust the air-fuel ratio or idle co reading to specifications.

USE OF THE EXHAUST GAS ANALYZER

The use of the exhaust gas analyzer is recommended only after the Normal Fuel Setting Procedures and Additional Idle Speed and Fuel Mixture Procedures have been performed and the engine idle condition is still not satisfactory.

1. Connect a Rotunda Model ARE 27-56U or 76 Exhaust Gas Analyzer, JJRE-23 Exhaust Emission Analyzer, or equivalent A/C-powered unit, in accordance with instructions provided by the manufacturer. **All exhaust gas analyzers must be checked for proper calibration.** Rotunda analyzers must have a **Certified Calibration identification on the face of the instrument.**
2. Observe the reading obtained on the exhaust gas analyzer. **The analyzer reading must be taken with the air cleaner installed.** Refer to the specifications for the minimum air-fuel ratio or idle CO reading.
3. Turn the idle mixture adjusting screw(s), as required, within the range of the idle limiter until the specified air-fuel ratio is obtained (on 2-V and 4-V carburetors, turn the idle limiters an equal amount). **The analyzer reading must be obtained with the air cleaner installed.** Correct for any changes in engine idle speed immediately as the idle mixture screw(s) or limiters are turned. **Allow at least 10 seconds following each idle mixture screw or limiter adjustment for the analyzer reading to properly respond and stabilize.**

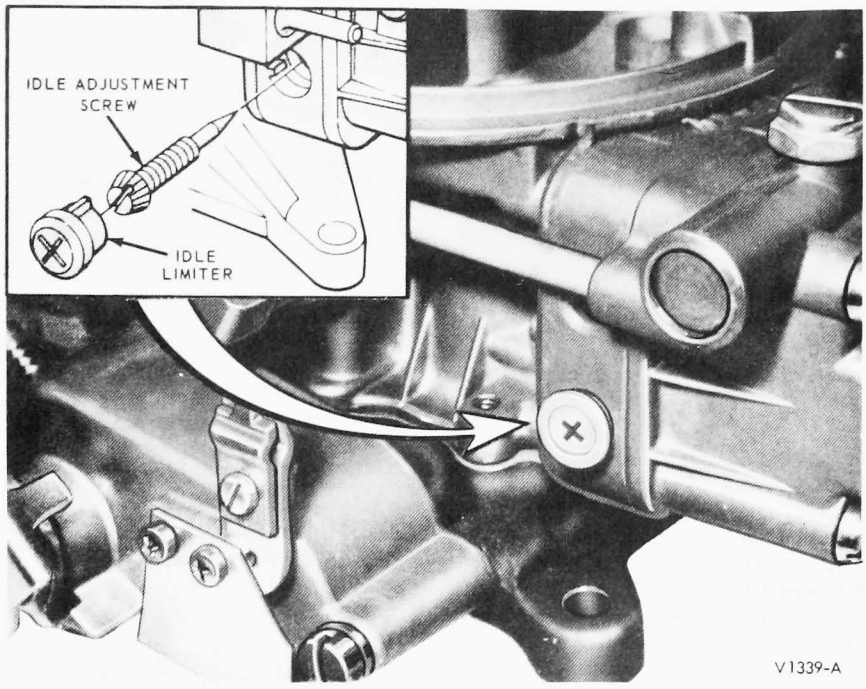

FIG. 9 Idle Fuel Mixture Limiter—Holley

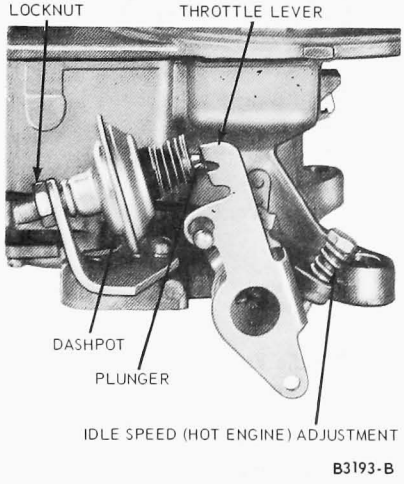

FIG. 10 Idle Speed Adjustment and Dashpot—Motorcraft Model 2100-D 2-V

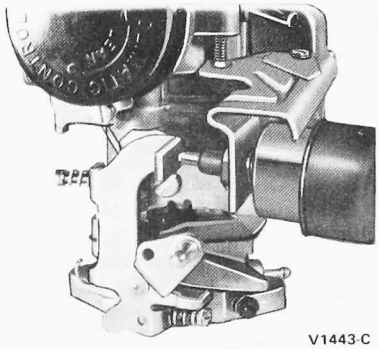

FIG. 11 Idle Speed Adjusting Screw—Carter Model YF 1-V

Verify the analyzer reading—Thermal conductivity exhaust gas analyzers will give an erroneously rich reading if the air-fuel mixture or idle CO reading is extremely lean. To check for this condition, partially hand choke the carburetor, or rapidly open and close the throttle three or four times to enrich the air-fuel mixture or idle CO reading. The analyzer meter will reflect the momentary rich condition. Then it will deflect in the lean direction as the rich condition subsides, and will gradually return to a richer reading as the excessively lean air-fuel ratio or idle CO reading is produced. **Vehicles with an automatic transmission must be in Neutral while this is being done.**

4. If the air-fuel ratio or idle CO reading is to specifications, **and the various engine systems are functioning correctly,** no further adjustments should be made.

If the air-fuel ratio or idle CO reading is not to specifications as shown by the analyzer reading, it may be corrected by altering the controlled limits of the carburetor idle fuel system. Refer to the procedures in Removal and Installation of Idle Limiter Caps.

REMOVAL AND INSTALLATION OF IDLE LIMITER CAPS

1. Remove the plastic limiter caps by cutting with side-cutter pliers and knife. After the cut is made, carefully pry the limiter apart. **On some carburetors, it may be necessary to remove the carburetor to remove the limiters.**

On Holley 4-V carburetors with the limiters installed in the metering block, pry the limiters off with a screwdriver.

2. After the limiters are removed, set the carburetor to the correct air-fuel ratio, using the exhaust gas analyzer.
3. When the air-fuel ratio is within specifications, install colored plastic service limiter caps.

When installing a limiter cap, use care not to turn the idle mixture screw with the cap. Position the cap so that it is in the maximum counterclockwise position with the tab of the limiter against the stop on the carburetor.

The idle mixture adjusting screw will then be at the maximum allowable outward, or rich, setting.

To install the service limiter cap, use a straight, forward pushing force with thumb pressure or a 3/8-inch socket wrench extension.

4. Recheck the air-fuel ratio or idle CO reading with the air cleaner installed, using the exhaust gas analyzer to make sure the limiter caps are properly installed. After the idle limiter has been reset and the air-fuel ratio or idle CO reading and idle condition are satisfactory, stamp or scribe the letter **R** on the carburetor identification tag just above the name **MOTORCRAFT to indicate that the carburetor has been reworked.**

CARTER MODEL YF 1-V

Fast Idle Cam Index Setting

1. Position the fast idle screw on the kickdown step of the fast idle cam against the shoulder of the high step.
2. Adjust by bending the choke plate connecting rod to obtain the specified clearance between the lower edge of the choke plate and the carburetor bore.

Fast Idle Speed—Manual Choke Carburetor

1. Open the throttle plate and hold the choke plate fully closed to allow the fast idle cam to rotate to the fast idle position.
2. Set the fast idle speed, using the fast idle adjusting screw.

Fast Idle Speed—Automatic Choke Carburetor

The fast idle adjusting screw contacts one edge of the fast idle cam.

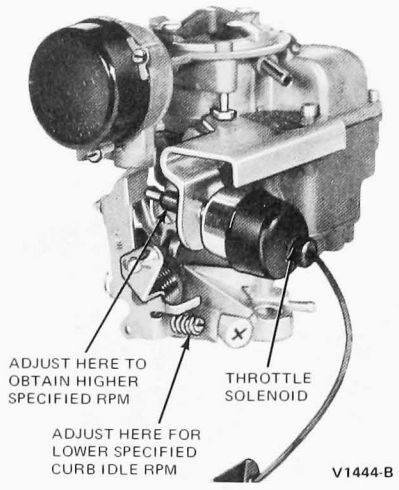

FIG. 12 Carter Model YF 1-V with Throttle Solenoid Positioner

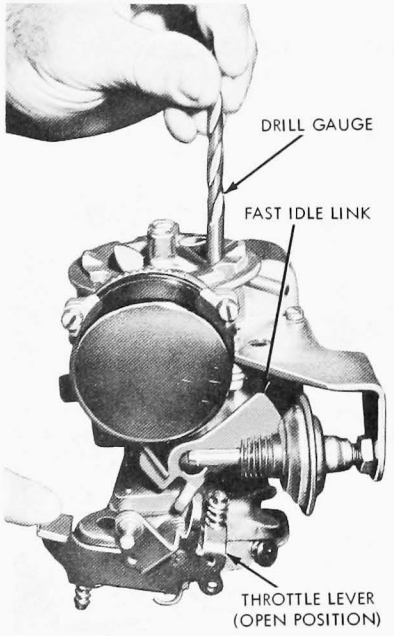

FIG. 13 Choke Plate Clearance Adjustment (De-Choke)

The cam permits a faster engine idle speed for smoother running when the engine is cold during choke operation. As the choke plate is moved through its range of travel from the closed to the open position, the fast idle cam pick-up lever rotates the fast idle cam. Each position on the fast idle cam permits a slower idle rpm as engine temperature rises and choking is reduced.

Make certain the curb idle speed and mixture are adjusted to specification before attempting to set the fast idle speed.

1. With the engine operating temperature normalized (hot), air cleaner removed and the tachometer attached, manually rotate the fast idle cam until the fast idle adjusting screw rests on the specified step of the cam.
2. Turn the fast idle adjusting screw inward or outward as required to obtain the specified fast idle rpm.

Anti-Stall Dashpot

The engine idle mixture speed must be properly adjusted before adjusting the anti-stall dashpot.

1. Remove the air cleaner.
2. Loosen the anti-stall dashpot locknut.
3. With the choke plate open, hold the throttle plate closed (idle position), and check the clearance between the throttle lever and dashpot plunger tip with a feeler gauge of the specified clearance dimension. Turn the dashpot inward or outward to obtain the specified clearance and tighten the lock nut. **The clearance must be measured with the plunger fully depressed.**

Automatic Choke Thermostatic Spring Housing Adjustment

The automatic choke has an adjustment to control its reaction to engine temperature. By loosening the clamp screws that retain the thermostatic spring housing to the choke housing, the spring housing can be turned to alter the adjustment. Refer to the specifications for the proper setting.

1. Remove the air cleaner assembly from the carburetor.
2. Loosen the thermostatic spring housing clamp attaching screws. Set the spring housing to the specified index mark and tighten the clamp attaching screws.
3. If other carburetor adjustments are not required, install the air cleaner assembly on the carburetor.

De-Choke Clearance

1. Remove the air cleaner, then remove the choke thermostatic spring housing from the carburetor.
2. Hold the throttle plate fully open and close the choke plate as far as possible without forcing it. Use a drill of the proper diameter to check the clearance between the choke plate and air horn (Fig. 13).
3. If the clearance is not within specification, adjust by bending the arm on the choke trip lever. Bending the arm downward will increase the clearance, and bending it upward will decrease the clearance. Always recheck the clearance after making any adjustment.

4. Install the baffle plate, gasket and thermostatic coil housing. Be sure the thermostatic spring engages the tang on the choke lever and shaft assembly.
5. Set the thermostatic choke housing to the specified index mark and tighten the attaching screws.

Pulldown Clearance

1. Remove the air cleaner. Remove the choke thermostatic spring housing from the carburetor.
2. Bend a 0.026 inch diameter wire gauge at a 90 degree angle approximately 1/8 inch from one end. Insert the bent end of the gauge between the choke piston slot and the right hand slot in the choke housing. Rotate the choke piston lever counterclockwise until the gauge is snug in the piston slot.
3. Exert a light pressure on the choke piston lever to hold the gauge in place, then use a drill gauge with a diameter equal to the specified clearance between the lower edge of the choke plate and the carburetor bore to check clearance (Fig. 14).
4. To adjust the choke plate pulldown clearance, bend the choke piston lever as required to obtain the specified setting. Remove the choke piston lever for bending to prevent distorting the piston link, causing erratic choke operation.
5. Install the choke thermostatic spring housing and gasket. Set the housing to specifications.

MOTORCRAFT MODEL 2100-D

Fast Idle Speed Adjustments

The fast idle adjusting screw (Fig. 15) contacts one edge of the fast idle cam. The cam permits a faster engine idle speed for smoother running when the engine is cold during choke operation. As the choke plate is moved through its range of travel from the closed to the open position, the fast idle cam pick-up lever rotates the fast idle cam. Each position of the fast idle cam permits a slower idle rpm as engine temperature rises and choking is reduced. On vehicles equipped with a spark delay device, by-pass the delay device by connecting a vacuum line directly from the carburetor spark port to the advance side of the distributor. Also, on vehicles equipped with EGR system, disconnect and plug the vacuum line to the EGR valve before setting the fast idle speed.

Make certain the idle (hot engine) speed and mixture is adjusted to specification before attempting to set the fast idle speed.

1. With the engine operating temperature normalized (hot), air cleaner removed and the tachometer attached, manually rotate the fast idle cam until the fast idle adjusting screw rests on the **center** step on the cam.
2. Start the engine, and turn the fast idle adjusting screw inward or outward as required to obtain the specified idle rpm.

Anti-Stall Dashpot Adjustment

The anti-stall dashpot adjustment is made with the air cleaner removed.

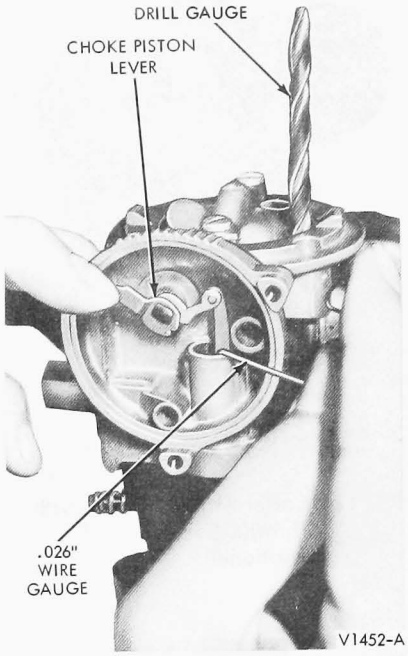

FIG. 14 Pulldown Clearance Adjustment—Carter Model YF 1-V

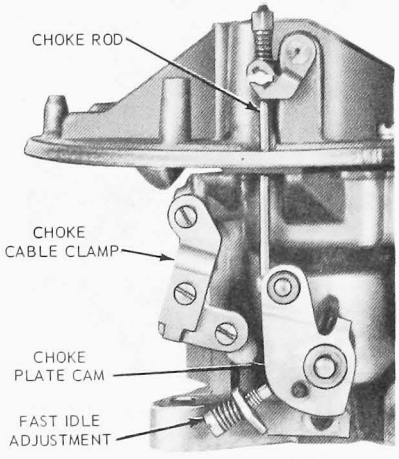

FIG. 15 Fast (Cold Engine) Idle Speed Adjustment—Motorcraft Model 2100-D 2-V

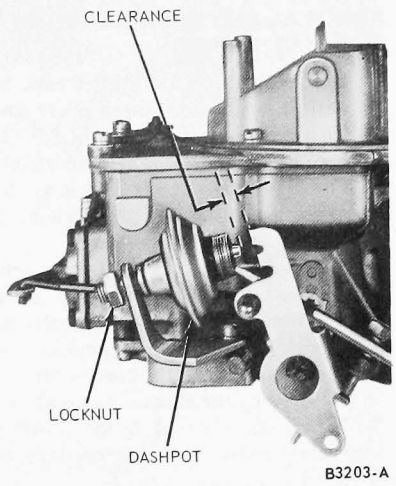

FIG. 16 Anti-Stall Dashpot Adjustment—Motorcraft Model 2100-D 2-V

1. With the engine idle speed and mixture properly adjusted, and the engine at normal operating temperature, loosen the anti-stall dashpot locknut (Fig. 16).
2. Hold the throttle in the closed position and depress the plunger with a screwdriver blade. Measure the clearance between the throttle lever and the plunger tip. Turn the anti-stall dashpot in a direction to provide the specified clearance between the tip of the plunger and the throttle lever. Tighten the locknut to secure the adjustment.
3. Check the accelerating pump stroke for adjustment. Install the air cleaner.

Accelerating Pump Adjustment

The accelerating pump stroke has been set to help keep the exhaust emission level of the engine within the specified limits. The additional holes provided for pump stroke adjustment are for adjusting the stroke for specific engine applications. **The stroke should not be changed from the specified setting.**

If the pump stroke has been changed from the specified setting, refer to the following instructions to correct the stroke to specifications.

The throttle shaft lever (overtravel lever) has 4 holes and the accelerating pump link has 2 holes (Fig. 17) to control the accelerating pump stroke.

The accelerating pump operating rod should be in the specified hole in the overtravel lever and the inboard hole (hole closest to the pump plunger) in the accelerating pump link (Fig. 17).

1. To release the rod from the retainer clip, press the tab end of the clip toward the rod; then, at the same

time, press the rod away from the clip until it is disengaged.
2. Position the clip over the specified hole in the overtravel lever. Press the ends of the clip together and insert the operating rod through the clip and the overtravel lever. Release the clip to engage the rod.

Choke Plate Pulldown Clearance Adjustment— Manual Choke

1. Remove the air cleaner. Pull the choke cam and lever to the full choke position. Insert the specified size gauge or drill between the downward side of the choke plate and the air horn wall (Fig. 18). The gauge or drill will open the choke plate against the pull-down spring tension.
2. Adjust the choke operating (pull-down) rod adjusting nut to compress the spring to just contact the plastic swivel (Fig. 18).

CHOKE PLATE PULLDOWN AND FAST IDLE CAM CLEARANCE

CHOKE PLATE PULLDOWN

1. Remove the air cleaner.
2. With the engine at normal operating temperature, loosen the choke thermostatic spring housing retainer screws and set the housing 90 degrees in the **rich** direction.
3. Disconnect and remove the choke heat tube from the choke housing.
4. Turn the fast idle adjusting screw outward **one full turn.**
5. Start the engine, then check for specified clearance between the lower edge of the choke plate and the air horn wall (Fig. 19).
6. Because the choke plate pulldown is set in production by means of an air-fuel meter, no specific clearance is indicated for pulldown adjustment. If the vehicle shows indication of leaness during cold starting, decrease the clearance between the choke plate and the air horn wall by 0.020 inch. If the engine shown signs of an overrich condition during cold starting, increase the pulldown clearance by 0.020 inch. If additional adjustment is required always make the adjustments is Steps of 0.020 inch. If the original pulldown adjustment is lost, set the clearance between the choke plate and the air horn to 0.160 inch. Then adjust as required in steps of 0.020 inch.
7. Connect the choke heat tube and set the choke thermostatic spring housing to specifications. Adjust the

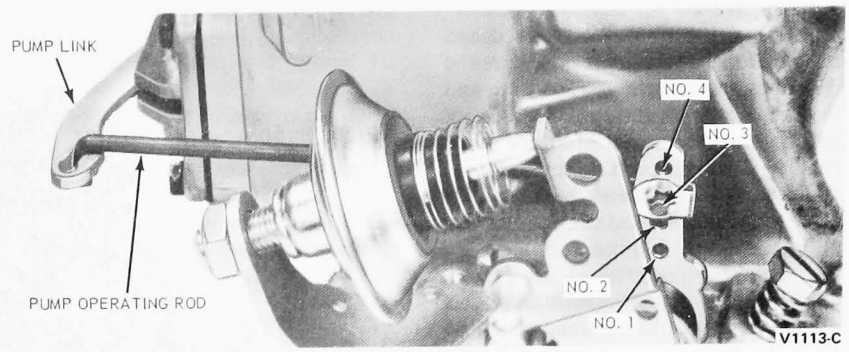

FIG. 17 Accelerating Pump Stroke Motorcraft Model 2100-D 2-V

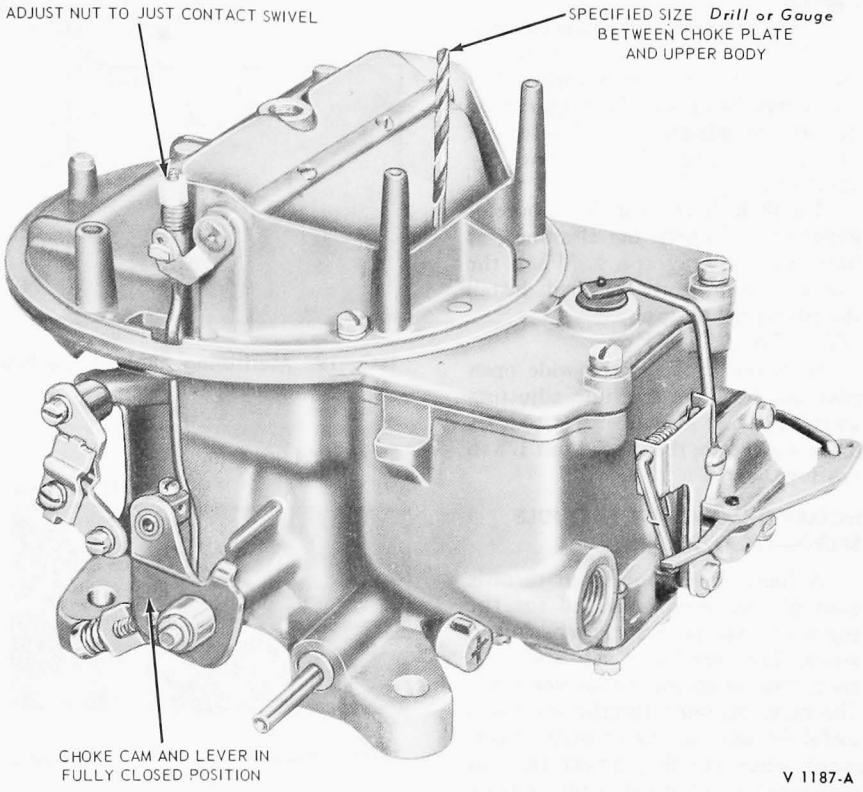

FIG. 18 Adjusting Choke Plate Pulldown Clearance— Motorcraft Model 2100-D 2-V with Manual Choke

FAST IDLE CAM CLEARANCE

1. Rotate the choke thermostatic spring housing 90 degrees in the rich direction.
2. Position the fast idle speed screw on the high step of the cam.
3. Depress the choke pulldown diaphragm against the diaphragm stop screw to place the choke in the pulldown position.
4. While holding the choke pulldown diaphragm depressed, open the throttle slightly and allow the fast idle cam to fall.
5. Close the throttle and check the position of the fast idle cam or lever. The screw should contact the cam at the V mark on the cam.
6. Adjust the fast idle cam adjusting screw to obtain the proper setting.
4. Set the choke thermostatic spring housing to specifications. Adjust the anti-stall dashpot, idle speed and fuel mixture.

HOLLEY 2-V AND 4-V CARBURETOR FAST IDLE SPEED—INITIAL SETTING ADJUSTMENT

If the carburetor was removed from the vehicle for replacement or overhaul procedures, it is recommended that an initial fast idle adjustment be performed as follows.

330 and 361 2-V

With the throttle plates closed and the choke plate wide open, measure the clearance between the fast idle cam and the fast idle screw. If the clearance is not to specifications, turn the fast idle screw the required amount to increase or decrease the clearance. A 1/4 turn in or out will alter the clearance by approximately 0.008 inch.

391 4-V

With the primary throttle plates closed, measure the clearance between the fast idle cam and the head of the fast idle cam and the head of the fast idle screw (Fig. 20). If the clearance is not to specifications, remove the governor housing.

Turn the fast idle screw the required amount to increase or decrease the clearance. **A 3/16 inch wrench with a 90 degree head will be required to perform the adjustment.** A 1/4 turn in or out will alter the clearance by approximately 0.008 inch.

Install the housing on the carburetor governor and check the clearance, as outlined in Paragraph 2. When the clearance is properly adjusted, install the governor housing.

401, 477 and 534 4-V

With the choke in the wide open position, turn the fast idle adjusting screw (Fig. 21) in until it just touches the fast idle cam; then back it off 1/8 to 1/4 turn.

HOLLEY 2-V AND 4-V FAST IDLE SPEED—FINAL SETTING

A hand (cable) operated throttle control has been provided for the engines in various vehicle models and series. The throttle is actuated by a knob, located on the instrument panel. The hand operated throttle control is useful for maintaining constant engine speed when running power take-off equipment or when performing certain service operations.

The fast (cold engine) idle speed is adjusted with the hand throttle control knob pushed fully inward. The idle (hot engine) speed must be adjusted to specification before the fast idle speed can be adjusted.

330 and 361 2-V V-8 and 391 4-V V-8 Engines

The fast idle speed adjustment screw for the carburetor on a 330 and 361 2-V V-8 engine is located in the throttle housing. The fast idle speed adjustment screw for the 391 4-V V-8 engine is located in the governor housing (Fig. 20).

The fast idle adjustment screw contacts the fast idle cam during the engine warm-up period and controls the fast (cold engine) idle speed.

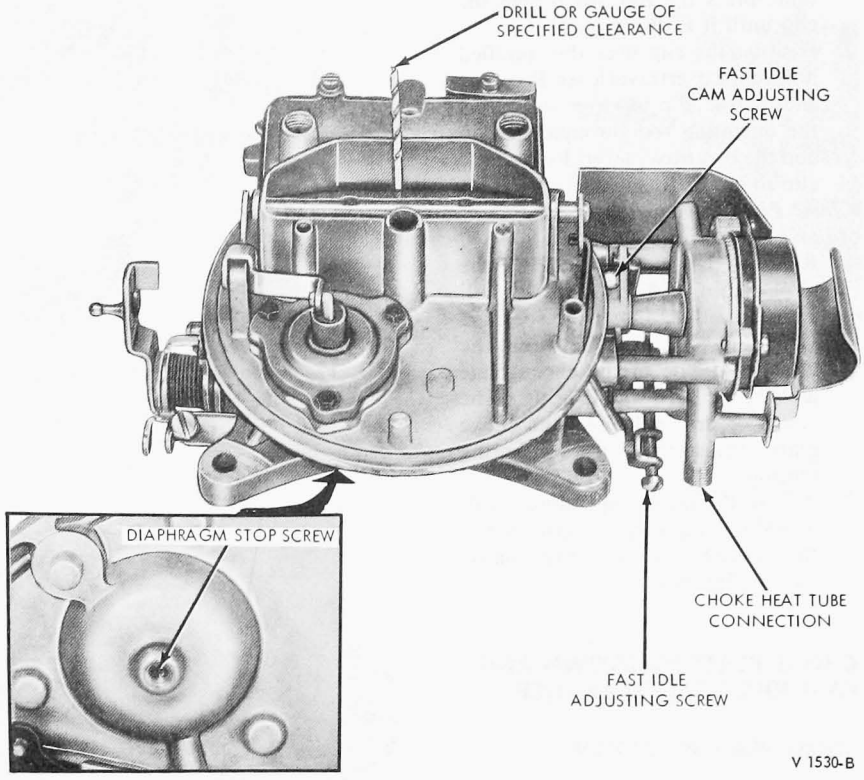

FIG. 19 Measuring Choke Plate Pulldown

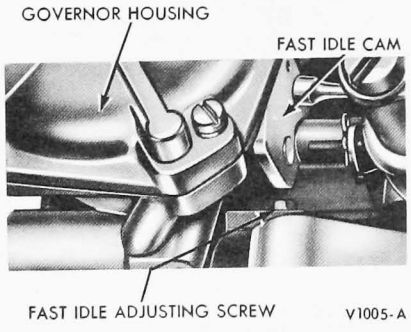

FIG. 20 Fast (Cold Engine) Idle Speed Adjustment—391 4-V Engine

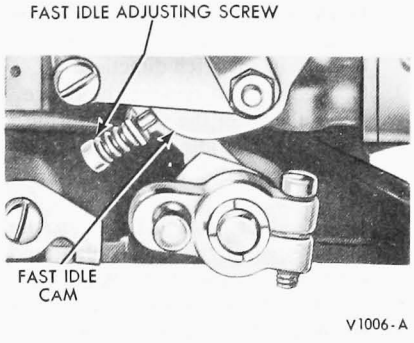

FIG. 21 Fast (Cold Engine) Idle Speed Adjustment— 401, 477 and 534 4-V V-8 Engines

1. Adjust the idle (hot engine) speed and mixture to specifications before attempting to set the fast (cold engine) idle speed. **The fast idle speed adjustment is made with the engine at normal, stabilized operating temperature.**
2. With the engine operating and a tachometer attached to the engine, disconnect the choke cable housing from the choke cable bracket clamp. Pull the choke cable housing rearward until the choke plate operating lever is against the stop on the choke cable bracket. **Hold the choke plate open to the choke pulldown limit, to keep the engine running.**
3. Check the fast (cold engine) rpm. If the idle rpm is not to specification, turn the fast idle screw clockwise with a 3/16 inch wrench to decrease the engine rpm or counterclockwise to increase the rpm. **On a 4-V carburetor, a 3/16 inch wrench with a 90 degree head will be required to perform the adjustment.**
4. Turn off the engine and remove the tachometer.
5. Push the choke lever, cable and

housing forward to the full choke position and clamp the choke cable housing to the choke cable bracket.
6. Install the air cleaner assembly if other adjustments are not required.

The fast idle adjustment screw on the left side of the carburetor contacts the fast idle cam during the engine warm-up period and controls the fast (cold engine) idle speed (Fig. 20).

401, 477 and 534 4-V V-8 Engines

1. Adjust the idle (hot engine) speed and mixture before attempting to set the fast (cold engine) idle speed. **The fast idle speed adjustment is made with the engine at a normal, stabilized operating temperature.**
2. With the choke in the wide open position, turn the fast idle adjusting screw (Fig. 20) in until it just touches the fast idle cam; then back it off 1/8 to 1/4 turn.

HOLLEY CARBURETOR ACCELERATING PUMP LEVER ADJUSTMENT

1. Using a feeler gauge and with the throttle plates (primary throttle plates on 4-V carburetors) in the wide open position, there should be the specified clearance between the accelerating pump operating lever adjustment screw head and the pump arm when the pump arm is depressed manually.
2. If adjustment is required, loosen the adjusting screw locknut and turn the adjusting screw in to increase the clearance and out to decrease the clearance. **One-half turn of the adjusting screw is equal to approximately 0.015 inch.** When the proper adjustment has been obtained hold the adjustment screw in position with a wrench and tighten the lock nut.
3. Perform an accelerating pump stroke adjustment, if required.

HOLLEY CARBURETOR ACCELERATING PUMP STROKE ADJUSTMENT

The accelerating pump stroke has been set to help keep the exhaust emission level of the engine within the specified limits. The additional holes provided for pump stroke adjustment are for adjusting the stroke for specific engine applications. **The stroke should not be changed from the specified setting.**

If the pump stroke has been changed from the specified setting refer to the following instructions to correct the stroke to specifications.

If a change in the adjustment is required, make certain the proper hole (top or bottom) in plastic accelerating pump cam, located behind the throttle lever, is properly aligned (indexed) with the numbered hole (top or bottom) in the throttle lever before installing the attaching screw.

SPECIFICATIONS

Refer to the Truck Specifications Book for Fuel System Specifications.

PART 50-26 Exhaust Systems

COMPONENT INDEX	Page	COMPONENT INDEX	Page
MAINTENANCE		Exhaust System Inspection	26-01
Exhaust Control Valve Operation	26-01		

MAINTENANCE

CHECK EXHAUST CONTROL VALVE FOR FREE OPERATION (IF SO EQUIPPED)

Check the thermostatic spring of the valve to make sure it is hooked on the stop pin. The spring stop is at the top of the valve housing when the valve is properly installed.

To check the exhaust control valve, make sure the spring holds the valve closed. Actuate the counterweight by hand to make sure it moves freely through approximately 90 degrees of rotation without binding.

The valve is closed when the engine is cold (Fig. 1). However, a properly operating valve will open when very light finger pressure is applied to the counterweight. Rapidly accelerate the engine to make sure the valve momentarily opens. The valve is designed to open when the engine is at normal operating temperature and is operated at high rpm.

Lubricate and free the valve with the specified solvent (Part 50-03) if the valve is sluggish or stuck.

INSPECT EXHAUST SYSTEM

The exhaust system must be free of leakage, binds, groundings, excessive vibration and restrictions. Check the exhaust manifold and pipe connections to be sure they are securely attached.

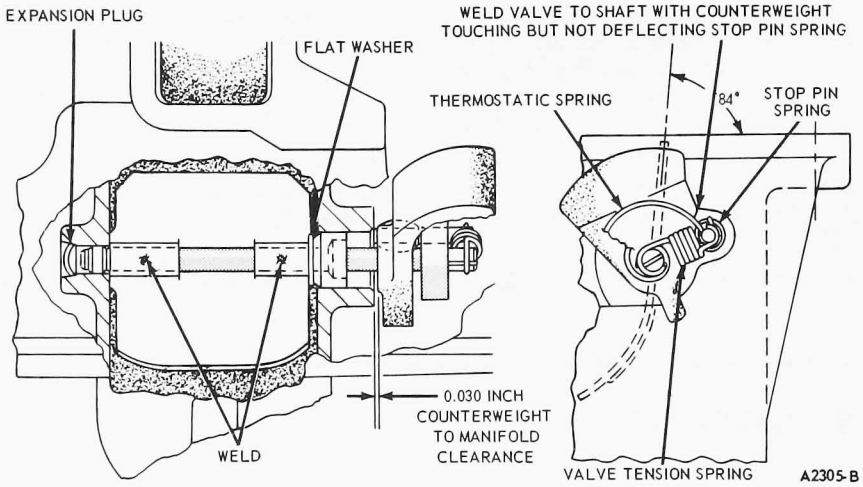

FIG. 1 Engine Exhaust Control Valve—Typical

Leaks can usually be detected visually, or in some cases, a whistling noise may be heard at the pipe connections. Check the various sections of the exhaust system for signs of leaking or burning through.

Muffler inlet and outlet pipes and the various pipe connectors must overlap sufficiently to prevent leakage, and provide enough overlap to support proper tightening of the retaining clamp(s). Replace all sections that show signs of burning through.

Exhaust system vibration, grounding or binds are usually caused by: loose, broken or improperly aligned clamps or brackets; improper installation of the inlet pipe flange on the exhaust manifold, or improper pipe connections. Any of the aforementioned conditions may cause changes to the clearances of the exhaust system components. If any of these conditions exist, the exhaust system components must be checked and adjusted to make certain clearances are maintained.

PART 50-27 Cooling System

COMPONENT INDEX	Page
LUBRICATION	
Shutter Assembly – Radiator	27-01
MAINTENANCE	
Anti-Freeze Protection Check	27-02
Coolant	27-02
Coolant Level Check	27-02
Coolant Mixture	27-02
Coolant Recovery System – Filling	27-03
Cooling System – Draining and Filling	27-02
Cooling System, Hoses and Lines – Inspection	27-04
Shutterstat Integral Air Filter Cleaning	27-03
Shutters Inspection – Radiator	27-04
Sight Glass – Radiator	27-03
PRE-DELIVERY	
Anti-Freeze Protection Check	27-01
Cooling System, Hoses and Lines – Check	27-01
Radiator Coolant Level – Check	27-01
SPECIFICATIONS	27-04

PRE-DELIVERY

CHECK THE COOLING SYSTEM, HOSES AND LINES

Check for leaking radiator hoses and tighten if necessary.

Make sure all supporting brackets for hoses are in place and that the hoses are properly installed in the supports.

CHECK RADIATOR COOLANT LEVEL (ENGINE AT NORMAL OPERATING TEMPERATURE)

CAUTION: Avoid injury when checking a hot engine. Muffle the radiator cap in a thick cloth and turn it slowly counterclockwise only until the pressure starts to escape. After the pressure has completely dissipated, finish removing the cap.

On conventional radiators, the coolant level should be approximately 1 inch below the bottom of the radiator filler neck. On vehicles with an expansion tank, fill the tank 2/3 full.

On L-Series gasoline and Ford V-8 Diesel engines, with crossflow radiators, fill until the coolant is visible through the sightglass— engine cold. (Caution—Do not operate engine if coolant level is below sightglass.)

On L-Series Cummins and Detroit Diesel engines, fill until the coolant is visible through the bottom of the upper sightglass with engine cold. (Caution—Do not operate engine if coolant level is below the lower sightglass.)

When adding coolant, a mixture of Ford Permanent Anti-Freeze and water is recommended. To avoid possible chemical damage to the cooling system, do not mix different brands of anti-freeze no use other than a permanent anti-freeze meeting Ford specification ESE-M97B18-C.

Keep the freeze protection at an adequate level for the temperatures which may occur in the area in which the vehicle will be operated. It should be maintained at least to 0 degrees F to provide adequate corrosion and boiling protection. Ford Permanent Anti-freeze may be added undiluted if anti-freeze protection below -35 degrees F is required. Refer to the coolant mixture charts on the container.

Tap water may be used in the mixture except where it is known to be very hard or to have a high alkaline content.

CHECK ANTI-FREEZE PROTECTION

Be sure the engine is at operating temperature. Check the anti-freeze in the cooling system by using a permanent anti-freeze test hydrometer. Standard protection is to -20 degrees F. (-35 degrees F. for Canadian and Alaskan vehicles) with a solution of Ford Permanent Anti-Freeze and water. The freeze protection of engine should be maintained at an adequate level for the temperatures which may occur in the area in which the vehicle will be operated. Regardless of the freeze protection required for gasoline engines during cold weather, it must be maintained at least to 0 degrees F. to provide adequate corrosion and boiling protection.

LUBRICATION

LUBRICATE RADIATOR SHUTTER ASSEMBLY

All vanes should move freely without binding. On all except W-Series, the shutter blade pivot rod and arms should be lubricated with SAE 10W engine oil. On W-Series lubricate the shutter control shaft bushings with SAE 10W engine oil.

MAINTENANCE

COOLANT

Correct coolant level is essential for maximum circulation and adequate cooling. In addition, for the cooling system to perform its function, it must receive proper care. This includes keeping the radiator fins clean and a periodic inspection of the cooling system for leakage.

Use care when removing the radiator cap to avoid injury from escaping steam or hot water.

In production, the cooling system is filled with a 45-55 solution of Ford Permanent Anti-freeze and water (50-50 solution for Canadian, Alaskan and export delivery) which prevents corrosion, keeps the cooling system clean, provides anti-freeze protection to -20 degrees F. in winter (-35 degrees for Canadian, Alaskan and export delivery) and provides for higher summer operation temperatures.

For the most effective cooling system operation, this mixture strength should be maintained all year around and in all climates.

You should keep the freeze protection of your engine at an adequate level for the temperatures which may occur in the area in which your truck will be operated. Regardless of the freeze protection required for your climate during cold weather, it must be maintained at least to 0 degrees F. to provide adequate corrosion and boiling protection.

All coolant added should be the specified mixture of Ford Permenent Anti-freeze and water.

Ordinary tap water may be used in an emergency **except in areas where the water is known to be exceptionally hard or to have a high alkali content. The cooling system should be drained and flushed and the proper mixture of anti-freeze added as soon as possible, however.**

To avoid possible overheating in very hot weather, do not use mixtures with more than 50 percent anti-freeze except in areas where anti-freeze protection below -35 degrees F is required. In this case, refer to the coolant mixture chart on the Ford Permanent Anti-freeze container.

Do not add any radiator sealers containing water soluble oil to the cooling system as it will make the corrosion resistor (water filter) inoperative.

RADIATOR COOLANT MIXTURE

To prevent damage to the cooling system during periods of below freezing ambient temperature, when water or anti-freeze is added to the supply tank, always operate the engine at fast idle for 30 minutes before letting the truck stand with the engine off for prolonged periods. This will allow a uniform mixture throughout the cooling system and prevent damage by freezing, when sufficient anti-freeze is used.

A standard ethylene glycol hydrometer can be used to check the protection level of the long-life coolant.

DRAINING AND FILLING THE COOLING SYSTEM

TRUCKS WITH GASOLINE ENGINES

To prevent loss of anti-freeze when draining the radiator attach a hose on the radiator drain cock and drain the coolant from the radiator into a clean container.

To drain the radiator, open the drain cock located at the bottom of the radiator and remove the radiator or supply tank cap. The cylinder block of the V-8 engine is drained by removing the drain plugs located on both sides of the block. The 6-cylinder engines have one drain plug located at the left rear of the cylinder block.

To fill the cooling system, install the cylinder block drain plug(s) and close the radiator drain cock. On 100-350 Series trucks, disconnect the heater outlet hose at the water pump to bleed or release trapped air in the system. When the coolant begins to escape, connect the heater outlet hose.

On C-800-900 Series trucks with super duty engines, open the air vent valve located at the front of the intake manifold to bleed the system. When coolant begins to escape at the opening, close the valve finger-tight. Do not overtighten, as the air vent valve is designed to be closed finger-tight only.

On downflow radiators, operate the engine and add more coolant, if necessary, to fill the radiator to the proper level. On trucks without a supply tank, fill the radiator one inch above the baffles (or core). On trucks equipped with a supply tank, fill the supply tank 2/3 full.

On L-Series equipped with crossflow radiators, fill until the coolant is 1 inch from the top of the tank-engine cold (Caution—Do not operate engine if coolant level is below sightglass.)

After the initial fill, the coolant level will drop approximately 1 quart after the engine has been operated about 20 minutes at 2000 rpm. This is due to the displacement of entrapped air.

CHECK ANTI-FREEZE PROTECTION

Be sure the engine is at operating temperature. Check the anti-freeze in the cooling system by using a permanent anti-freeze test hydrometer. Standard protection is to -20 degrees F. (-35 degrees F. for Canadian and Alaskan vehicles) with a solution of Ford Permanent Anti-Freeze and water. The freeze protection of engine should be maintained at an adequate level for the temperatures which may occur in the area in which the vehicle will be operated. Regardless of the freeze protection required for gasoline engines during cold weather, it must be maintained at least to 0 degrees F. to provide adequate corrosion and boiling protection.

CHECK RADIATOR COOLANT LEVEL (ENGINE AT NORMAL OPERATING TEMPERATURE)

CAUTION: Avoid injury when checking a hot engine. Muffle the radiator cap in a thick cloth and turn it slowly counterclockwise only until the pressure starts to escape. After the pressure has completely dissipated, finish removing the cap.

On conventional radiators, the coolant level should be approximately 1 inch below the bottom of the radiator filler neck. On vehicles with an expansion tank, fill the tank 2/3 full.

On L-Series gasoline and Ford V-8 Diesel engines, with crossflow radiators fill until the coolant is visible through the sightglass—engine cold. (Caution—Do not operate engine if coolant level is below sightglass.)

On L-Series Cummins and Detroit Diesel engines, fill until the coolant is visible through the bottom of the upper sightglass with engine cold. (Caution—Do not operate engine if coolant level is below the lower sightglass.)

When adding coolant, a mixture of Ford Permanent Anti-Freeze and water is recommended. To avoid possible chemical damage to the cooling system, do not mix different brands of anti-freeze nor use other than a permanent anti-freeze meeting Ford specificaiton ESE-M97B18-C.

Keep the freeze protection at an adequate level for the temperatures which may occur in the area in which the vehicle will be operated. It should be maintained at least to 0 degrees F to provide adequate corrosion and boiling protection. Ford Permanent Anti-Freeze may be added undiluted if anti-freeze protection below -35 degrees F is required. Refer to the coolant mixture charts on the container.

Tap water may be used in the mixture except where it is known to be very hard or to have a high alkaline content.

RADIATOR SIGHT GLASS—L-SERIES

Sight glass should be cleaned when coolant level is difficult to see. Unscrew sight glass from radiator. Wipe the glass with a clean damp cloth to remove any residue. Replace the sight glass in the radiator and torque to 9-13 in-lbs.

COOLANT RECOVERY SYSTEM

F-100-250 TRUCK, ECONOLINE E-100-300 W/240 CID ENGINE MANUAL TRANSMISSION, STANDARD COOLING, BRONCO WITH AUTOMATIC TRANSMISSION

The engine coolant recovery system incorporates a new radiator pressure cap and a new radiator coolant recovery reservoir assembly (Fig. 1).

When the cooling system has been drained for replacement of hoses, thermostat, engine repair, etc.; the following radiator coolant refilling instructions are recommended.

1. Fill the radiator, through the filler cap opening of the radiator upper tank completely full. The **locking type radiator cap may be removed by turning to the stop and, pressing down on the cap, force the cap past the stop tangs on the filler neck. When filling radiator, the engine should be running at idle speed to circulate the coolant and eliminate any trapped air in the system.**
2. Install the radiator cap.
3. Fill the coolant reservoir with one quart of coolant.
4. Operate the engine until it reaches normal temperature. Check the coolant reservoir to see if the coolant level is at the **Engine Hot** level. If necessary, add coolant to bring it to this level.

Note: The new design locking type radiator cap assembly should not be removed to check the coolant level. The filler neck of the radiator upper tank incorporates a built-in stop that prevents complete removal of the radiator cap under normal conditions. If necessary, add coolant to the reservoir only.

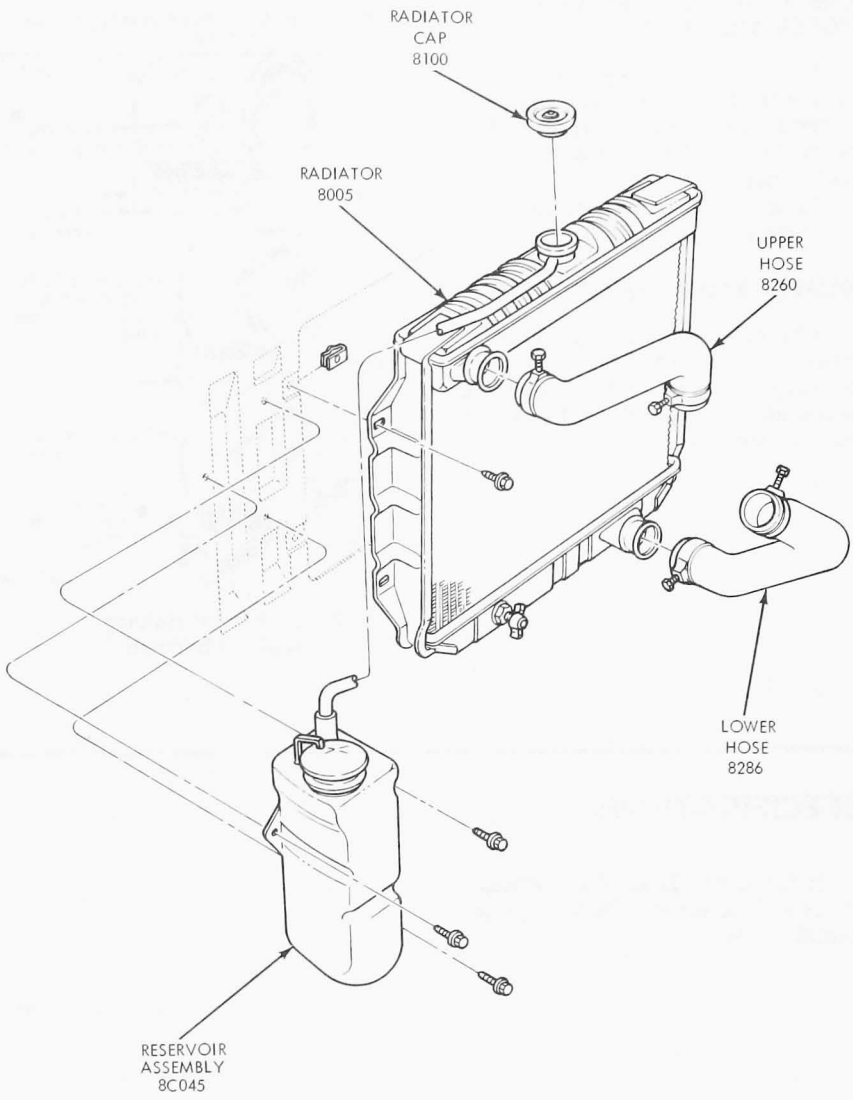

FIG. 1 Coolant Recovery System

CLEAN SHUTTERSTAT INTEGRAL AIR FILTER (EXCEPT W-SERIES)

The shutterstat has an integral air filter element which should be inspected, and if necessary, thoroughly cleaned every 24,000 miles.

However, in order to remove the element for cleaning, an end cap wrench, Kysor Tool No. B-18475, and a fabricated holding tool are required. The holding tool can be fabricated locally from steel tubing that is readily available. Fig. 2 outlines instructions for fabricating the tool.

1. Drain the air system. Install the fabricated holding tool (Fig. 2) over the end of the shutterstat.
2. Loosen the end cap using Kysor Tool B-18475 and remove the cap, cap gasket, spring washer, filter element and air filter gasket. Discard the gaskets.
3. Clean the filter element in solvent and dry with compressed air.
4. Place a new filter gasket in the shutterstat body. Then, install the air filter element, spring washer and end cap using a new end cap gasket. Torque the cap to 45 ft-lbs.
5. Start the engine and check the shutterstat for leaks.

CHECK THE COOLING SYSTEM, HOSES AND LINES

Inspect the cooling system hoses for evidence of cracking, checking for extreme weathering. Replace cracked hoses. Check for leaking or porous hoses and tighten or replace.

Inspect the radiator core and tanks for seepage or leaks.

INSPECT RADIATOR SHUTTERS

Check for smooth closing of shutters when engine is started, and for smooth opening as engine reaches operating temperature. Check blades for proper sealing. Adjust as required.

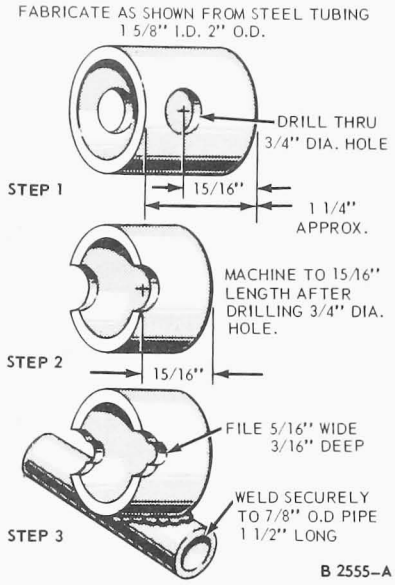

FIG. 2 Shutterstat Holding Tool—Fabricated

SPECIFICATIONS

Refer to the Truck Shop Manual, Volume Two, for the Cooling System Specifications.

PART 50-31 Charging System

COMPONENT INDEX	Page
MAINTENANCE	
Charging System Tests	31-02
Electrical Connections – Clean and Tighten	31-02
PRE-DELIVERY	
Alternator and Voltage Regulator Operation	31-01
PRE-DELIVERY (Cont.)	
Battery Cables – Check	31-01
Battery Fluid Level Check	31-01
Battery State of Charge Check	31-01
SPECIFICATIONS	31-07

PRE-DELIVERY

CHECK BATTERY STATE OF CHARGE

When corrected to 80 degrees F. the battery should have a specific gravity reading of not less than 1.250. If the battery requires charging, refer to the specific gravity chart in the specifications section.

Warning

Batteries contain SULFURIC ACID.In case of acid contact with skin, eyes, or clothing, FLUSH IMMEDIATELY WITH WATER FOR A MINIMUM OF FIVE MINUTES. Get "on-the-spot" medical attention immediately.

Hydrogen and oxygen gases are produced during normal battery operation. This gas mixture can explode if flames or sparks are brought near the battery. When charging or using battery in an enclosed space always provide ventilation.

Particular care should be used when connecting a booster battery in order to prevent sparks. To jump start (negative grounded battery):(1) Remove vent caps, (2) shield eyes, (3)connect ends of one cable to positive + terminals of each battery, (4) connect one end of other cable to negative (-) terminal of "good" battery, (5) connect other end of cable to engine block on vehicle being started (NOT TO NEGATIVE (-) TERMINAL OF BATTERY). To prevent damage to other electrical components on vehicle being started, make certain that engine is at idle speed before disconnecting jumper cables.

REMOVE CELL CAPS WHEN CHARGING OR USING JUMPER CABLES.

HIGH RATE OR CHARGE SCHEDULE

Charge rate 35 amperes, except use 5 ampere rate above 1.225.

Charge at low rate only until specific gravity reaches 1.250 at 80 degrees F.

If the specific gravity is below 1.125, use the indicated high rate of charge, then use a low rate of charge (5 amperes) until the specific gravity reaches 1.250 at 80 degrees F.

CHECK BATTERY FLUID LEVEL

Keep the fluid in each battery cell up to the level of the ring in the bottom of the filler well.

Ordinary tap water can be used except in areas where the water is known to be hard or to have a high mineral or alkali content—use distilled water in these areas.

Warning

Batteries contain SULFURIC ACID. In case of acid contact with skin, eyes, or clothing, FLUSH IMMEDIATELY WITH WATER FOR A MINIMUM OF FIVE MINUTES. Get "on-the-spot" medical attention immediately.

Hydrogen and oxygen gases are produced during normal battery operation. This gas mixture can explode if flames or sparks are brought near the battery. When charging or using battery in an enclosed space always provide ventilation.

Particular care should be used when connecting a booster battery in order to prevent sparks. To jump start (negative grounded battery):(1) Remove vent caps, (2) shield eyes, (3) connect ends of one cable to positive + terminals of each battery, (4) connect one end of other cable to negative (-) terminal of "good" battery, (5) connect other end of cable to engine block on vehicle being started (NOT TO NEGATIVE (-) TERMINAL OF BATTERY).

To prevent damage to other electrical components on vehicle being started, make certain that engine is at idle speed before disconnecting jumper cables.

REMOVE CELL CAPS WHEN CHARGING OR USING JUMPER CABLES.

CHECK BATTERY CABLES

Battery cables must be tight in terminals and terminals tight to posts after installation. A light coating of non-metallic grease can be applied to terminals and posts to retard corrosion and oxidation.

CHECK ALTERNATOR AND VOLTAGE REGULATOR OPERATION

Turn the headlights ON and check the charge indicator gauge or light to be sure the charging system is not discharging. If the system is discharging, check the charging system and repair as necessary. Refer to Part 31-01 in Volume 3.

MAINTENANCE

CLEAN AND TIGHTEN ELECTRICAL CONNECTIONS

Hard starting is often traceable to loose or corroded battery connections. A loose connection will overwork the generator/alternator and regulator and shorten their life.

1. Add water to battery cells to keep tops of plates covered.
2. Remove corrosion from around terminals. If severely corroded, scrub battery, terminals and surrounding area with a solution of baking soda and water. Use a nylon-bristle brush or other plastic brush that is impervious to acid. Wash off the residue from the battery and surrounding areas with clean water. Coat all corroded areas and terminals with petroleum jelly or chassis grease after installation.
3. Keep connections clean and tight. Prevent wire and lugs from touching each other or any metal except screw terminals to which they are attached.
4. Replace broken or worn wires and their terminals.
5. Have battery tested periodically. Follow battery manufacturer's instructions for maintenance.

G.P.D. CHARGING SYSTEM TESTS

Check the alternator drive belt and adjust it to specification before proceeding with any tests. Check and tighten all connectors at the starter relay and battery.

TESTS USING THE ROTUNDA ARE 20-22 ALTERNATOR REGULATOR TESTER

The general procedure is to connect the tester (Fig. 1) to the charging system, start the engine, make two tests, and then compare the pattern of lights that appear on the tester to each set of patterns shown on two charts (Figs. 2 and 3). Follow the instructions given with the ARE 20-22 tester.

TESTS USING THE ROTUNDA ARE 27-38 VOLT-AMP-ALTERNATOR TESTER

The following test procedures make use of the Rotunda Volt Amp-Alternator Tester ARE 27-38.

Refer to Wiring Diagram Manual Form 7795P-73 for schematics and locations of wiring harnesses. **Use care when connecting any test equipment to the alternator system, as the alternator output terminal is connected to the battery at all times.**

ALTERNATOR OUTPUT TEST ON ENGINE

When the alternator output test is conducted off the vehicle, a test bench must be used. Follow the procedure given by the test bench equipment manufacturer. **When the alternator is removed from the vehicle for this purpose always disconnect the battery ground cable as the alternator output connector is connected to the battery at all times.**

To test the output of the alternator on the vehicle, proceed as follows:

1. Check the alternator drive belt tension. Place the transmission in neutral or park **and apply the parking brake.** Make the connections and tester knob adjustments as shown in Fig. 4, Output Test. Be sure that the field rheostat knob is at the OFF position at the start of this test.
2. Close the battery adapter switch. Start the engine, then open the battery adapter switch.
3. Increase the engine speed to approximately 2000 rpm (use a tachometer). Turn off all lights and electrical accessories.
4. Turn the field rheostat knob clockwise until 15 volts is indicated on the voltmeter upper scale. Turn the master control knob clockwise until the voltmeter indicates between 11 and 12 volts. Holding the master control knob in this position, turn the field rheostat clockwise to its maximum rotation. Turn the master control knob counterclockwise until the voltmeter indicates 15 volts. Observe the ammeter reading. Add 2 amperes to this reading, to obtain alternator output. If rated output cannot be obtained, increase the engine speed to 2900 rpm and repeat this step.
5. Return the field rheostat knob to OFF, release the master control knob and stop the engine. Disconnect the test equipment, if no further tests are to be made.

If the alternator output is not OK, it will be necessary to remove the alternator from the vehicle and perform the necessary bench tests to locate the defect.

An output of 2 to 5 amperes below specifications usually indicates an open alternator diode. An output of approximately 10 amperes below specifications usually indicates a shorted alternator diode. An alternator with a shorted diode will usually produce a whine which will be most noticeable at idle speed.

MOTORCRAFT STATOR NEUTRAL VOLTAGE TEST—ON ENGINE

The Motorcraft alternator STA terminal is connected to the stator coil neutral, or off center point of the alternator windings. The voltage generated at this point is used to close the field relay in the Motorcraft charge indicator light system.

To test for the stator neutral voltage, disconnect the regulator. Make the connections and tester knob adjustments as shown in Fig. 5.

Start the engine and run it at 1000 rpm (use a tachometer). Turn off all lights and accessories. Rotate the field rheostat clockwise until at least 6 volts is indicated on the voltmeter upper scale. If 6 volts or more is not obtained, remove the alternator and perform the diode and stator tests to determine which part of the alternator is damaged.

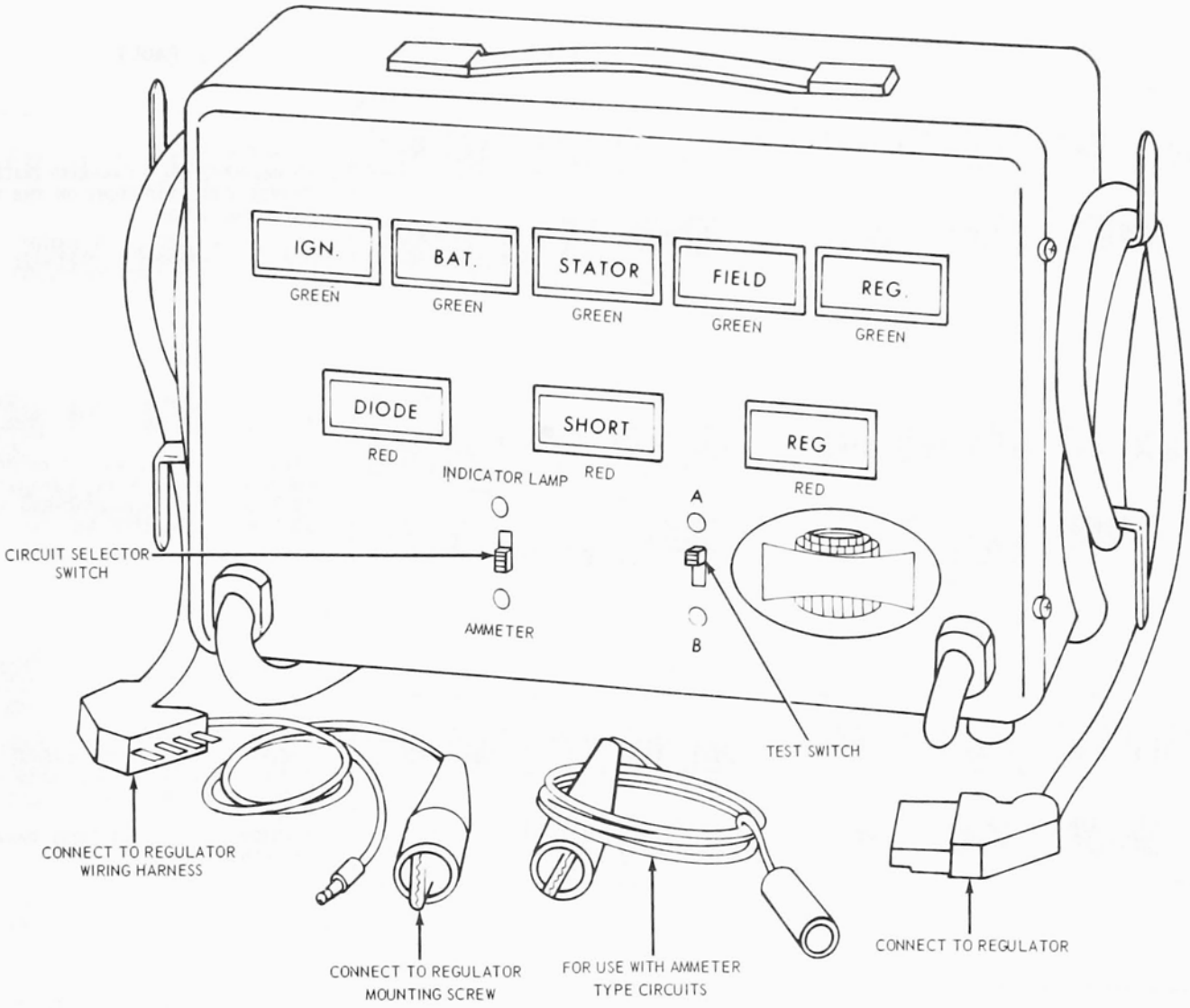

FIG. 1 ARE 20-22 Tester

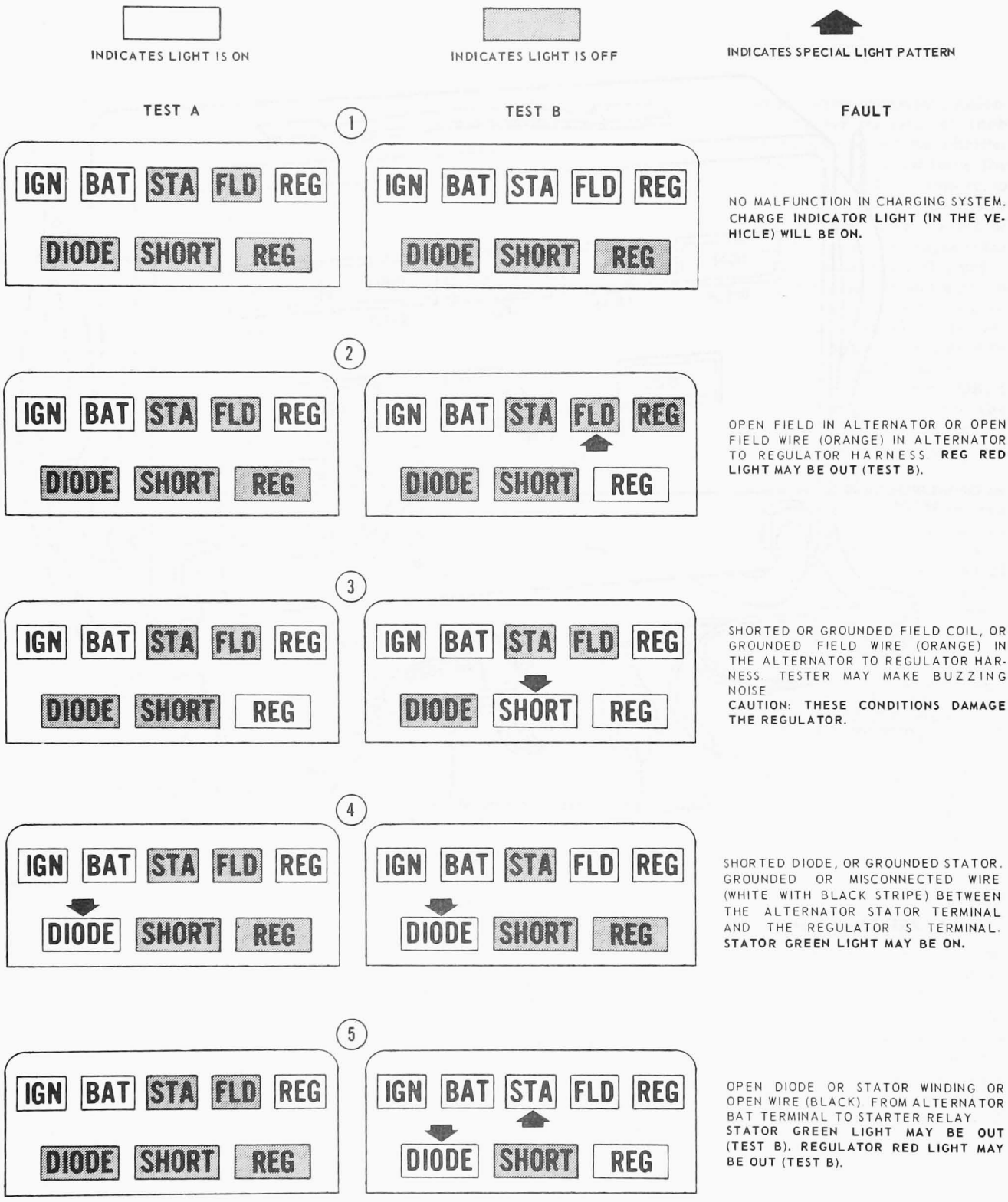

NOTE: ALWAYS REPAIR MALFUNCTION AND RETEST

J1399-D

FIG. 2 ARE 20-22 Test Chart

INDICATES LIGHT IS ON

INDICATES LIGHT IS OFF

INDICATES SPECIAL LIGHT PATTERN

	TEST A	TEST B	FAULT
6	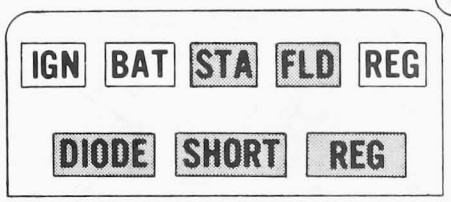	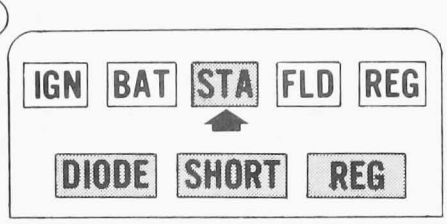	LOOSE DRIVE BELT OR PULLEY, OPEN STATOR WIRE (WHITE WITH BLACK TRACER) IN HARNESS FROM ALTERNATOR TO REGULATOR, OR OPEN STATOR WIRE IN ALTERNATOR.
7	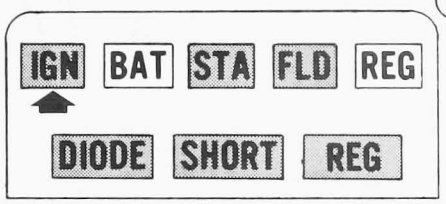	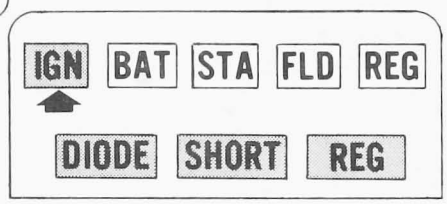	OPEN OR MISSING 15-OHM RESISTANCE WIRE OR OPEN WIRE (GREEN WITH RED TRACER) IN REGULATOR TO IGNITION SWITCH HARNESS. IF THE IGN GREEN LIGHT IS VERY BRIGHT, THE CHARGE INDICATOR BULB, SOCKET, OR WIRING IS SHORTED.
8	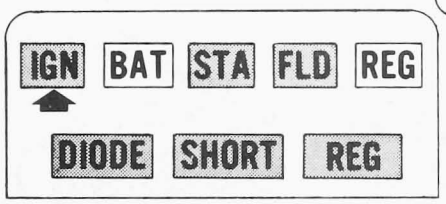	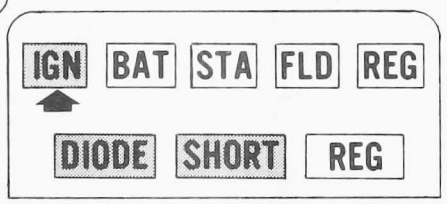	GROUNDED WIRE (GREEN-RED TRACER) BETWEEN REGULATOR PLUG AND CHARGE INDICATOR LIGHT. REG LIGHT MAY BE ON. **CAUTION: THIS CONDITION DAMAGES THE REGULATOR.**
9	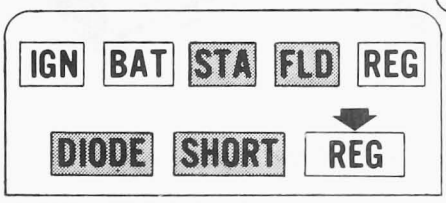	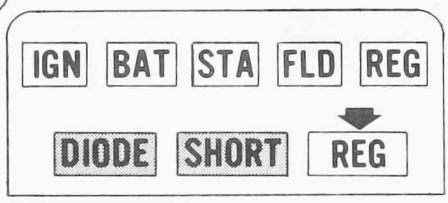	REGULATOR DEFECTIVE. **REG GREEN LIGHT MAY BE OFF IN TEST B.**
10	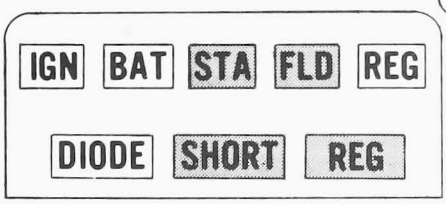	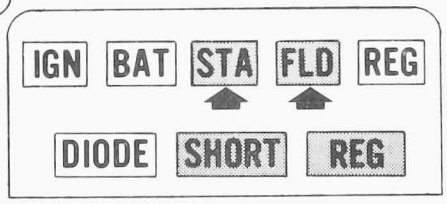	STATOR AND FIELD WIRES ARE CROSS CONNECTED. **REG GREEN LIGHT WILL BE DIM IN TEST A.**
11	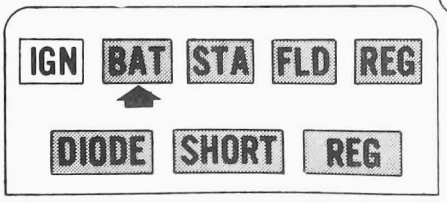	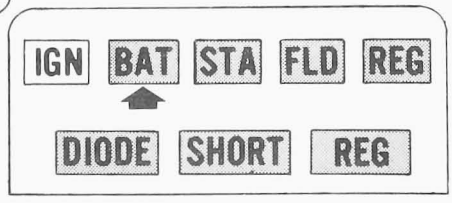	OPEN WIRE (YELLOW) BETWEEN BATTERY TERMINAL OF STARTER RELAY AND REGULATOR PLUG.

NOTE: ALWAYS REPAIR MALFUNCTION AND RETEST

J1400-C

FIG. 3 ARE 20-22 Test Chart

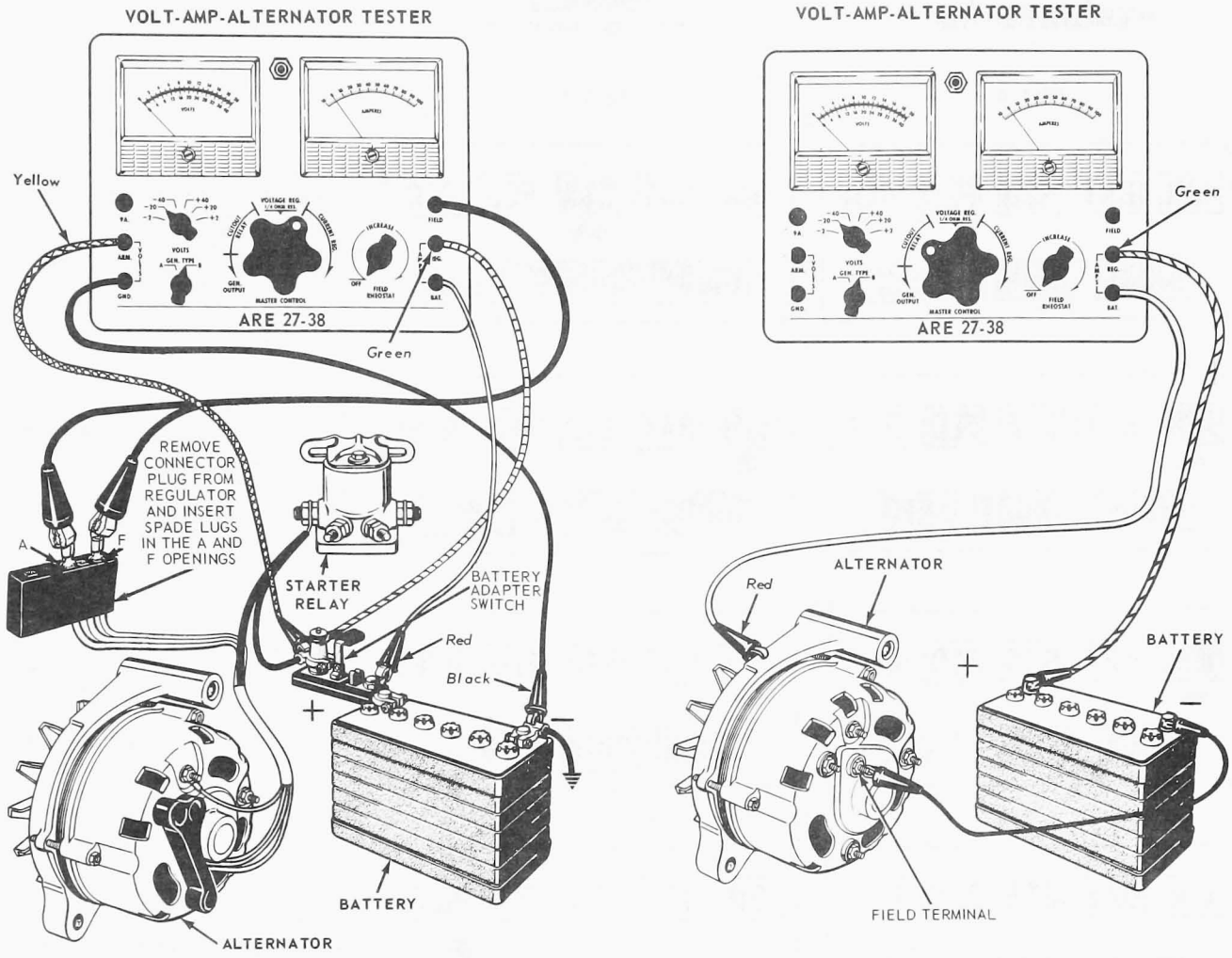

FIG. 4 Alternator Tests

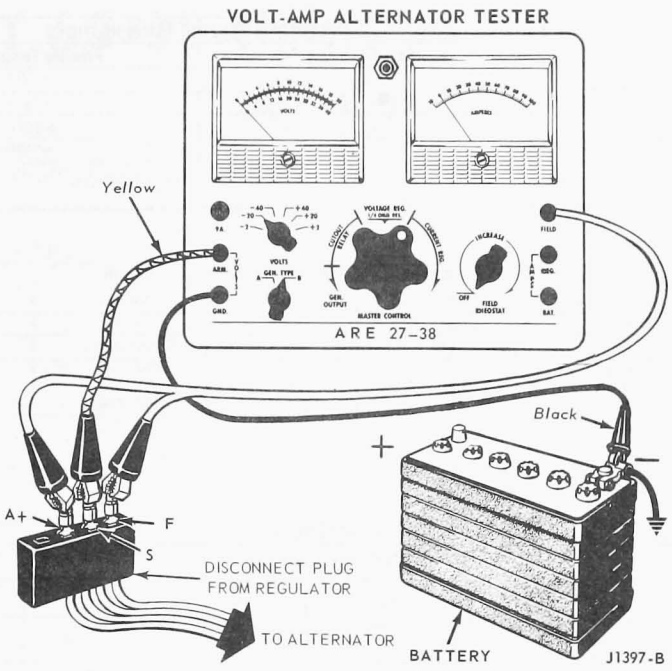

FIG. 5 Motorcraft Stator Neutral Voltage Test

SPECIFICATIONS

Refer to the Truck Shop Manual for all Specifications not contained in this Section.

BATTERIES

BATTERY FREEZING TEMPERATURES	
Specific Gravity	Freezing Temperature
1.280	-90°F
1.275	-85°F
1.250	-62°F
1.225	-38°F
1.200	-16°F
1.175	- 4°F

BATTERY FREEZING TEMPERATURES	
Specific Gravity	Freezing Temperature
1.150	+ 5°F
1.125	+13°F
1.100	+19°F
1.075	+24°F
1.050	+27°F

Battery Ampere Hours	Number of Plates	Length (Inches)	Filler Cap Color
45	54	9-7/16	Yellow
55	66	10-3/4	Red
55	66	13	Red
70	66	12-1/2	Red
70	78	14-1/4	Yellow

Battery Ampere Hours	Number of Plates	Length (Inches)	Filler Cap Color
93	78	13-1/2	Red
158	63	6 Volt 10-3/4	Red
155	126	20-1/2 by 9-5/8 high	Red
203	174	20-5/8 by 10-1/2 high	Red

ALLOWABLE BATTERY HIGH RATE CHARGE TIME SCHEDULE								
Specific Gravity Reading	Charge Rate Amperes	Battery Capacity Ampere Hours						
		45	55	70	93	155	158	204
1.125-1.150 ①	35	65 min	80 min	100 min	135 min	225 min	225 min	300 min
1.150-1.175	35	50 min	60 min	80 min	105 min	175 min	175 min	230 min
1.175-1.200	35	40 min	50 min	60 min	85 min	140 min	140 min	185 min
1.200-1.225	35	30 min	35 min	45 min	60 min	100 min	100 min	135 min
Above 1.225	5	②	②	②	②	③	③	③

① If the specific gravity is below 1.125, use the indicated high rate of charge for the 1.125 specific gravity, then charge at 5 amperes until the specific gravity reaches 1.250 at 80° F.

② Charge at 5 ampere rate only until the specific gravity reaches 1.250 at 80°F.

③ Charge at 10 ampere rate only until the specific gravity reaches 1.250 @ 80°F.

At no time during the charging operation should the electrolyte temperature exceed 130°F.

CJ1464-B

ALTERNATOR–G.P.D.

Rating			Field Current	Cut-In Speed (Engine	Rated Output Speed (Engine rpm)		Slip-Ring Turning (Inches)		Brush Length (Inches)		Pulley Nut Torque	Belt Tension
Identification Plate Color	Amperes @ 15V	Watts @ 15V	Amps @ 12V	rpm)	Cold	Hot	Min. Dia.	Max. Runout	New	Wear Limit	(Ft-Lbs)	(Lbs) ①
Purple	38	570	2.5	400	2000	2900	1.22	0.0005	1/2	5/16	60-100	70-110
Orange	42	630	2.9	400	2000	2900	1.22	0.0005	1/2	5/16	60-100	70-110
Red	55	825	2.9	400	2000	2900	1.22	0.0005	1/2	5/16	60-100	70-110
Green	61	915	2.9	400	2000	2900	1.22	0.0005	1/2	5/16	60-100	70-110
Black	70	1050	2.9	360	1640	–	1.22	0.0005	5/8	3/8	60-100	70-110
Red	90	1350	2.9	812	2900	–	1.22	0.0005	5/8	3/8	60-100	70-110

① Used belt. New Belt 140. A used belt is one that has been in operation for more than 10 minutes. If belt tension is not within specification, or belt has been removed, reset to 110 lbs.

SPECIAL TOOLS

Ford Tool No.	Former No.	Description
T63L-8620-A	8620 BT-33-73-F	Belt Tension Gauge
T65P-10300-B		Alternator Pulley Remover

Ford Tool No.	Former No.	Description
ARE-16-31		Battery-Starter Tester
ARE-20-22		Alternator-Regulator Tester
ARE-27-38		Volt-Amp Regulator Tester
ARE-27-42		Ohmmeter

CJ1460-D

PART 50-32 Lights, Instruments, Controls, Heating, Air Conditioning and Accessories

COMPONENT INDEX	Page	COMPONENT INDEX	Page
LUBRICATION		Heater and Defroster Operation	32-01
Ignition Lock	32-02	Horn Operation	32-01
Speedometer Cable	32-02	Instruments Operation	32-01
Tachometer Adapter	32-02	Lights, Gauges and Instruments Operation	32-01
Tachometer Cable	32-02	Odometer Operation	32-01
MAINTENANCE		Radio Antenna Installation	32-01
Headlight Alignment	32-03	Radio Operation	32-01
Windshield Washer Fluid Level	32-03	Speedometer, Odometer and Tachometer Operation	32-01
Windshield Wiper Blade Replacement	32-03	Windshield Washer Reservoir Fluid Level	32-01
PRE-DELIVERY		Windshield Wipers	32-01
Air Conditioner Operation	32-02		
Air Vents – Fresh	32-02		
Cigar Lighter – Install and Check	32-01		
Gauges Operation	32-01		
Headlight Alignment	32-01		

PRE-DELIVERY

WINDSHIELD WASHER RESERVOIR FLUID LEVEL

In warm weather, fill the reservoir with water and enough Rotunda windshield washer solvent to act as a detergent.

In winter, be sure to keep the reservoir filled with a solution of 2 parts water to 1 part Ford windshield washer solvent. This solution is necessary to prevent freezing and damaging the reservoir.

HEADLIGHT ALIGNMENT

Check the headlights for proper alignment. If necessary, align the headlights using the Headlight Aiming Kit—Model T.R.E. 540. Be sure to use the latest manufacturers instructions, dated June 1971.

INSTALL RADIO ANTENNA

Check type and location specified, and install the antenna using installation instructions and template supplied with antenna kit. Do not break the plastic adapter when tightening the nut.

RADIO

Check for proper operation of radio, if so equipped. Set push-buttons for local stations.

CHECK OPERATION OF ALL LIGHTS, GAUGES AND INSTRUMENTS

Check for proper operation of switches and brightness of lights, including operation of oil pressure and alternator warning lights. Check detent action and return of turn signal lever by making full left and right turns during road test. Check all other lights and switches for proper operation.

CHECK SPEEDOMETER, ODOMETER AND TACHOMETER

Check the speedometer, odometer and tachometer for proper operation. Lubricate and tighten cable connections if needle bounce is found.

HORN, WINDSHIELD WIPERS AND WASHERS

Check for proper operation, including sweep and park (Figs. 1 and 2). Adjust if required. Check the windshield washer spray pattern. Adjust if required (Refer to Group 35 of Volume 3).

INSTALL AND CHECK CIGAR LIGHTER

Install the lighter and check the operation of the lighter. If the lighter is inoperative, check to be sure the wire is connected to the light socket.

HEATER AND DEFROSTER

Check for proper operation by placing selector in heat position. Actuate blower switch through each speed position and check for corresponding change in air discharge at outlets. Move temperature control lever through entire range and check for proper change in discharge air temperature. Repeat this procedure in defrost position and check for proper air discharge through defroster nozzles.

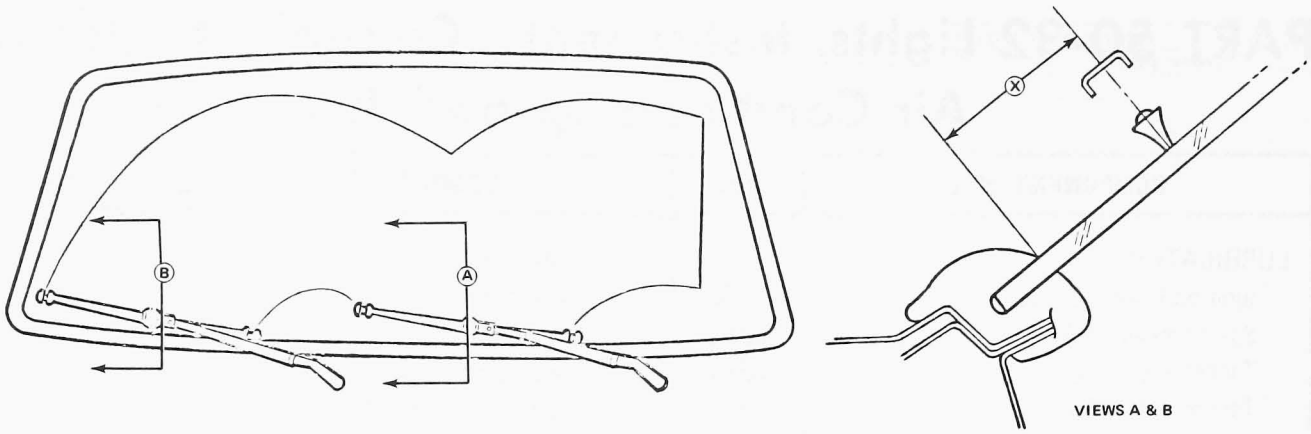

FIG. 1 Wiper Arm and Blade Adjustment

Vehicle	Dimension X (Inches)	
	Driver's Side	Passenger Side
C-Series (Para-Wipe)	1.75-2.75	1.75-2.75
C-Series	1.00-2.00	1.00-2.00
W-Series	1.00-2.50	1.00-2.50
L-Series	2.00-3.38	1.50-2.87
Econoline	2.50-3.50	2.50-3.50
Bronco (From Top)	0.50-1.25	0.50-1.25
F-Series	1.00-2.00	1.00-2.00

CK3042-A

FIG. 2 Wiper Arm and Blade Adjustment x Dimensions

FRESH AIR VENTS

Check for proper operation of all fresh air vents by actuating the vent controls.

AIR CONDITIONING

Check for proper operation by placing the control levers in Max. A/C and Cool positions. Increase engine speed to approximately 1500 rpm. After approximately 1 minute, check for proper cool air discharge at each A/C register in each blower speed position. Also, check register(s) for direction and volume control. Check for proper temperature modulation by moving control lever slowly to Warm position. Then, return lever to Cool position.

LUBRICATION

LUBRICATE IGNITION LOCK

Check for ease of operation by inserting key and turning to all positions. Remove key and lubricate ignition lock cylinder if necessary with the specified lock lubricant (Part 50-03). Insert key and operate several times to be sure lubricant has effectively worked in. Remove key and wipe off any excess lubricant.

LUBRICATE SPEEDOMETER CABLE

1. Disconnect the speedometer cable from the speedometer.
2. Pull the core out of the casing.
3. Wash all old lubricant from the cable. Wipe the cable dry.
4. Apply a thin film of specified Speedometer Cable lubricant (Part 50-03) to the cable.
5. Insert the core in the casing.
6. Connect the cable to the speedometer.

LUBRICATE TACHOMETER CABLE

1. Disconnect the tachometer cable from the tachometer head.
2. Pull the core out of the casing.
3. Wipe off all the old lubricant from the cable and apply specified Speedometer Cable Lubricant (Part 50-03) sparingly.
4. Install the tachometer cable core in the cable casing and connect the cable to the tachometer head.

LUBRICATE TACHOMETER ADAPTER—C-LN-AND W-Series

Disconnect the cable housing at both ends of the adapter. Daub the cable ends liberally with Ford All-Purpose Lubriplate, insert them into the adapter and reconnect the cable housings.

MAINTENANCE

REPLACE WINDSHIELD WIPER BLADES

Wiper blade replacement intervals will vary with the amount of use, type of weather, chemical reaction from road tars or salts and the age of the blades. Be sure that the windshield glass surface is not contaminated with oil, tree sap or other foreign substance which cannot be easily rubbed off.

Generally, if the wiper pattern across the glass is still uneven and streaked after these tests, the blades should be replaced.

WINDSHIELD WASHER RESERVOIR FLUID LEVEL

In warm weather, fill the reservoir with water and enough Rotunda windshield washer solvent to act as a detergent.

In winter, be sure to keep the reservoir filled with a solution of 2 parts water to 1 part Ford windshield washer solvent. This solution is necessary to prevent freezing and damaging the reservoir.

HEADLIGHT ALIGNMENT

Check the headlights for proper alignment. If necessary, align the headlights using the Headlight Aiming Kit—Model T.R.E. 540. Be sure to use the latest manufacturers instructions, dated June 1971.

PART 50-41 Body

COMPONENT INDEX	Page	COMPONENT INDEX	Page
LUBRICATION		Bumpers and Moldings Check	41-01
Cab Latch	41-02	Clean and Inspect Vehicle	41-01
Door Hinge, Hinge Check, Rotor and Striker Plate	41-02	Doors, Locks and Latches Operation Check	41-01
Hood Auxiliary Catch	41-02	Exterior Appearance Check	41-01
Hood Latch and Hinges	41-02	Seat Back Latch Operation	41-01
Lock Cylinders	41-02	Seat Control Operation	41-01
Tailgate Hinges	41-02	Shipping Protective Material Removal	41-01
MAINTENANCE		Tailgate Operation Check	41-01
Body and Door Drain Holes Cleaning	41-02	Windows and Vents Operation	41-01
PRE-DELIVERY		SPECIFICATIONS	41-02
Bumper Bolt Torque Check	41-01		

PRE-DELIVERY

CHECK SEAT CONTROL

Check lever for ease of operation, test freeness of seat movement on track, and test for solid engagement with lever released. If equipped with a suspension seat, check for proper operation of all controls.

SEAT BACK LATCH

Check the seat back latches (if so equipped) for ease of operation and seat back retention.

WINDOWS AND VENTS

Check for ease of operation, like position of both right and left interior handles, and tight fit against weatherstrip when closed. Check for alignment to opening. Refer to 1973 Truck Shop Manual, Group 42, for detailed instructions.

CHECK EXTERIOR FOR FITS AND APPEARANCE

Inspect the body exterior for objectionable door and hood gaps or evidence of rubbing or binding with adjacent panels. Check the exterior mouldings for adequate retention and/or extreme misalignment. Inspect the bumpers for an objectionable alignment appearance.

CHECK DOORS, LOCKS AND LATCHES FOR OPERATION

Open and close all doors from both inside and outside the vehicle. Check for ease of operation, proper latching, and alignment of the latch and striker. Check to be sure all doors can be locked and unlocked from inside the vehicle. Check to be sure the doors can be locked and unlocked from outside the vehicle with a key.

CHECK TAILGATE OPERATION

Check the tailgate for ease of operation and lubricate as required. Check the latch alignment and adjust if necessary. Refer to the 1973 Truck Shop Manual, Group 44, for detailed adjustment procedures.

BUMPERS AND MOULDINGS

Check condition, fit and alignment. Adjust as required. Refer to the 1973 Truck Shop Manual, Group 47, for detailed instructions.

FRONT BUMPER BOLT TORQUE

Check and tighten as required, to specifications given in Specifications Section.

REMOVE SHIPPING PROTECTIVE MATERIAL

Remove all shipping protective covers from the vehicle except the tape under the hood flange on L-Series trucks. **This tape should not be removed.**

CLEAN AND INSPECT VEHICLE

Remove the windshield markings and tapes. Wash the vehicle and check for leaks. Inspect for exterior metal damage. Inspect exterior paint condition, and touch up chips and scratches. Check for excess sealer.

AFTER ROAD TEST

Remove the seat protector and tapes. Inspect for interior paint condition, and touch up chips and scratches. Check for soft trim soilage and excess sealer.

Verify information on ownercard with warranty plate and check Owner's Manual in glove compartment.

LUBRICATION

LUBRICATE HOOD LATCH AND HINGES

Spray Specified Polyethylene grease (Part 50-03) on all pivot points and on the striker plate as required to eliminate any binding condition. Operate the latch mechanism several times to be sure that the lubricant has effectively worked in.

LUBRICATE HOOD AUXILIARY CATCH

Spray Specified Polytheylene Grease (Part 50-03) on all pivot points as required to eliminate any binding conditions. Operate the catch several times to be sure that the lubricant has effectively worked in.

LUBRICATE LOCK CYLINDERS

Apply Specified Lock Lubricant (Part 50-03) sparingly through the key slot. Insert the key and operate the lock several times to be sure that the lubricant has effectively worked in.

LUBRICATE DOOR HINGE, HINGE CHECK, ROTOR AND STRIKER PLATE

Spray Ford Polythylene Grease (Part 50-03) on the hinge pivot points, rotor, and striker plate as required to eliminate any binding condition. Open and close the door several times to be sure that the lubricant has effectively worked in.

LUBRICATE TAILGATE HINGE

Spray Specified Polythylene Grease (Part 50-03) on all pivot and friction points to eliminate any binding conditions. Operate the tailgate several times to be sure that the lubricant has effectively worked in.

LUBRICATE CAB LATCH (W-SERIES)

Squirt 10W oil into the cab lower latch to lubricate the locking cams (Fig. 1).

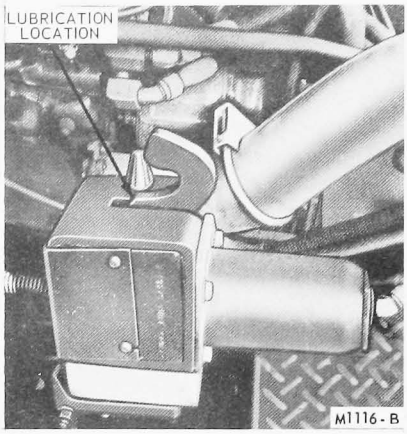

FIG. 1 Cab Latch Lubrication—W-Series

LUBRICATE CAB LATCH MECHANISM—C-SERIES

Lubricate the lock handle linkage and locking cams with 10W oil at all pivot points. Operate the mechanism to work the lubricant into all points.

MAINTENANCE

CLEAN BODY AND DOOR DRAIN HOLES

Drain holes, located along the bottom surface of the door and side panels, should be inspected periodically for plugged or obstructed condition. A practical time for inspection is whenever the vehicle is washed. Use a small screwdriver or similar tool to clean these drain holes.

SPECIFICATIONS

FRONT BUMPER BOLTS TORQUE

3/8 Inch	30–40 Ft-Lbs.
7/16 Inch	50–70 Ft-Lbs.
9/16 Inch	80–90 Ft-Lbs.
1/2 Inch	75–105 Ft-Lbs.
5/8 Inch	140–180 Ft-Lbs.

CY 1375-B

Mark Corp
January 73 365-127-73D Litho in U.S.A.

Ford

Ford Marketing Corporation
Ford Customer Service Division
Service Technical Communications Department